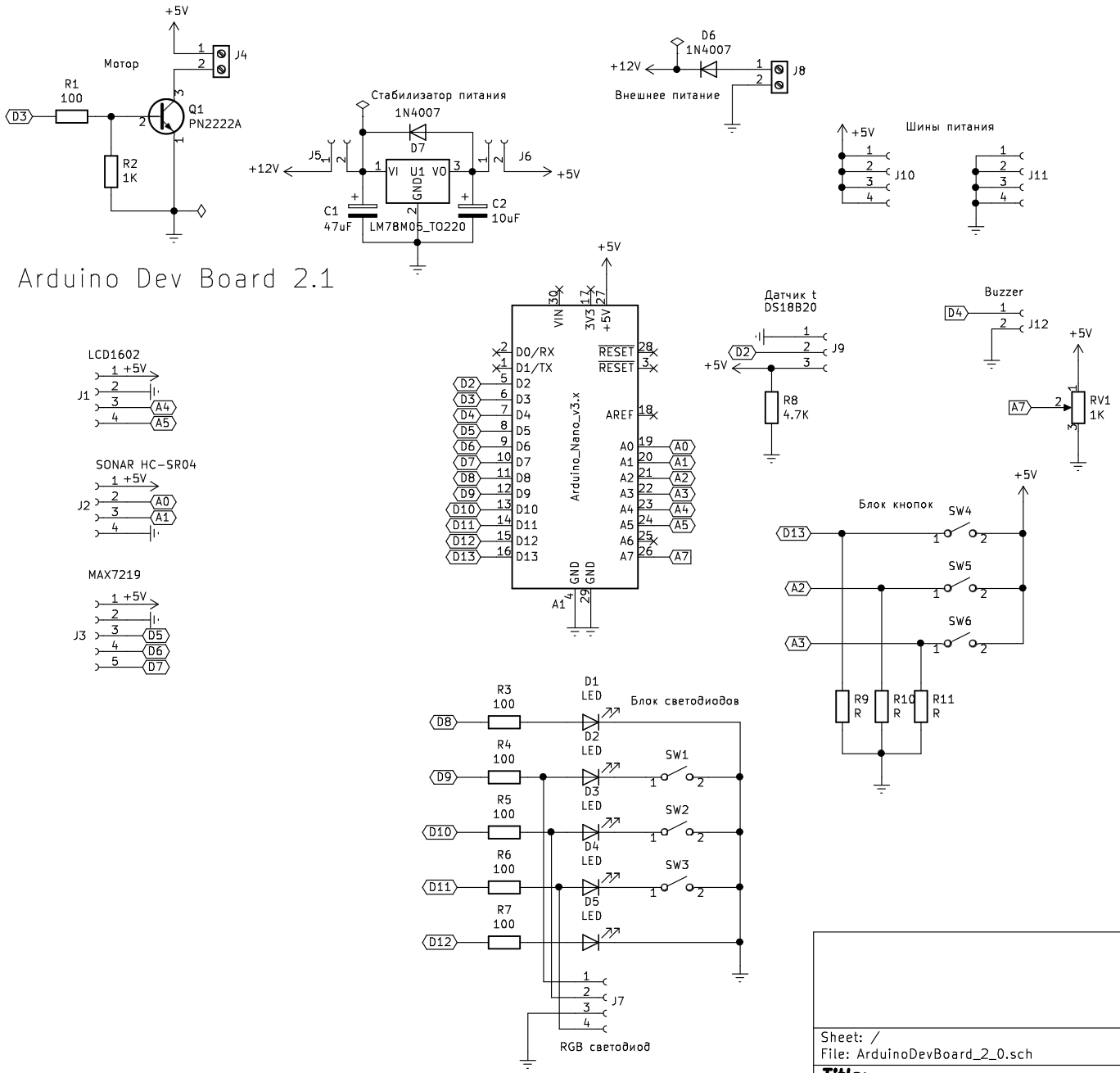

Sheet: /
File: ArduinoDevBoard_2_0.sch

Title:

Size: A4	Date:	**Rev:**
KiCad E.D.A. kicad 5.1.5-52549c584ubuntu18.04.1		Id: 1/1