University of Moratuwa

Faculty of Engineering

Department of Electronic and Telecommunication Engineering

EN2091 – Laboratory Practice and Projects

Final Report

Analog Function Generator

Group Members

230436X	Nettikumara N.A.H.G.
230436E	Rasanjana W.P.G.R.A
230180F	Fernando H.M.D.
230322U	Karunarathne G.K.T.

Date: 14.12.2025

Abstract

This report presents the design and implementation of an analog function generator capable of producing sine, square, triangular, and sawtooth waveforms. The system was constructed entirely using analog components such as operational amplifiers, transistors, resistors, capacitors, and MOSFETs. The function generator provides adjustable amplitude from 0 V to 10 V, frequency variation from 20 Hz to 20 kHz, and a variable duty cycle for PWM signals ranging from 1% to 99%. Design methodologies, circuit calculations, component selection, PCB layout, enclosure design, and experimental validation are discussed in detail. Simulation and hardware testing confirm that the generator meets the required specifications while maintaining signal integrity.

Contents

1 Introduction and Functionality **1**

2 Requirements **1**

3 Calculations and Design **2**

3.1 Square Wave Generation 2

3.2 PWM Wave Generation 2

3.3 Sawtooth Wave Generation 3

3.4 Triangle Wave Generation 3

3.5 Frequency Variation for Square and Triangle Wave Generation 4

3.6 Sine Wave Generation Using Wien Bridge Oscillator 5

3.7 Frequency Variation for Sine Wave Generation 6

4 Selection of Components **6**

4.1 Operational Amplifier Selection 6

4.2 Transistor Selection 6

5 Power Supply **6**

6 Push-Pull Output with Voltage Buffer, DC shifter and inverting amplifier **7**

7 Simulation and Testing **8**

7.1 Simulation 8

7.2 Hardware Testing 8

8 PCB Design **9**

9 Enclosure Design **11**

10 Final Product Results **13**

11 Future Improvements **14**

12 Contribution of Group Members **14**

13 References **15**

1 Introduction and Functionality

A function generator is a fundamental laboratory instrument used for testing, debugging, and characterizing electronic systems. It provides periodic waveforms of selectable shape, frequency, and amplitude. In this project, an analog function generator was designed using discrete and integrated analog components, without employing any digital signal generation techniques.

The proposed system is capable of generating square, triangular, sawtooth, and PWM waveforms using a closed-loop configuration consisting of a Schmitt trigger and an integrator. The Schmitt trigger generates a square wave, which is subsequently integrated to obtain triangular and sawtooth waveforms. PWM generation is achieved by appropriate adjustment of the comparator thresholds within the same loop.

For sine wave generation, a Wien bridge oscillator topology was employed due to its low distortion and stable frequency characteristics. All signal-generation and conditioning stages were implemented using TL072CP operational amplifiers, selected for their high slew rate and sufficient bandwidth to support operation across the full frequency range.

The function generator operates over a frequency range of 20 Hz to 20 kHz. Frequency control is achieved using RC-based timing networks, where different frequency bands are selected by switching timing capacitors, and continuous frequency variation within each band is provided by a potentiometer. Amplitude variation and DC offset control are implemented using summing and buffer amplifier stages, enabling flexible output conditioning.

A push-pull output stage ensures sufficient current-drive capability for low-impedance loads. In addition, a dedicated dual-polarity power supply (± 12 V) was designed and implemented to meet the operational requirements of the analog circuitry and to ensure stable, symmetric signal swing.

2 Requirements

The design meets the following specifications:

- Output waveforms: Sine, Square, Triangle, Sawtooth
- Frequency range: 20 Hz to 20 kHz
- Amplitude variation: 0 V to 10 V
- PWM duty cycle range: 1% to 99%
- Minimum load driving capability: $50\,\Omega$

3 Calculations and Design

3.1 Square Wave Generation

A Schmitt trigger configuration using an operational amplifier was employed for square wave generation. Positive feedback introduces hysteresis, allowing the circuit to switch states when the input crosses defined threshold levels.

$$V_{TH} = \pm \frac{R_8}{R_8 + R_9} V_{sat} \tag{1}$$

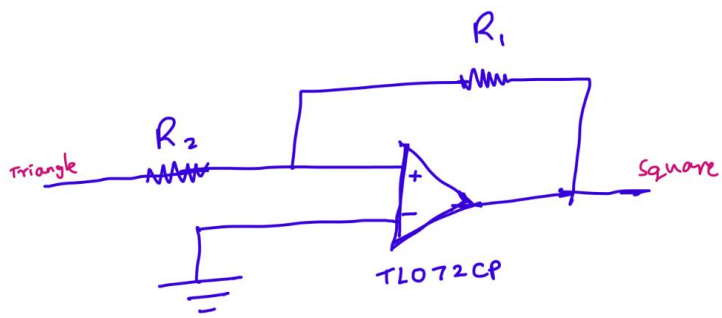

Figure 1: Schmitt trigger based square wave generator

3.2 PWM Wave Generation

Pulse Width Modulation (PWM) is obtained by applying a controllable DC bias to the non-inverting terminal of the integrator. The bias voltage is varied between $-V_s$ ($-12\,\mathrm{V}$) and $+V_s$ ($+12\,\mathrm{V}$) using the potentiometer R_{11} connected across the dual supply rails.

A triangular waveform, generated by integrating the square wave output of the Schmitt trigger, is compared against this adjustable reference level. Varying the DC offset shifts the triangular waveform relative to the switching thresholds, thereby altering the switching instants of the output. This results in a PWM waveform whose duty cycle varies continuously while maintaining a constant frequency. Consequently, the average output voltage of the PWM signal can be precisely controlled.

3.3 Sawtooth Wave Generation

The sawtooth waveform is generated by introducing a DC offset to the integrator using the potentiometer R_{11}. The applied DC bias causes the charging and discharging slopes of the integrator capacitor to become unequal.

As a result, the capacitor charges slowly in one direction and discharges more rapidly in the opposite direction, transforming the symmetrical triangular waveform into a sawtooth waveform. The degree of asymmetry, and hence the shape of the sawtooth waveform, can be continuously controlled by varying the DC offset voltage.

3.4 Triangle Wave Generation

The triangular waveform is obtained by integrating the square wave output of a Schmitt trigger using an op-amp integrator. The Schmitt trigger alternates between positive and negative saturation levels, causing the integrator capacitor to charge and discharge linearly in opposite directions.

This repeated linear integration produces a symmetrical triangular waveform. The output of the integrator is governed by:

$$V_{out}(t) = -\frac{1}{RC}\int V_{in}(t)\,dt \tag{2}$$

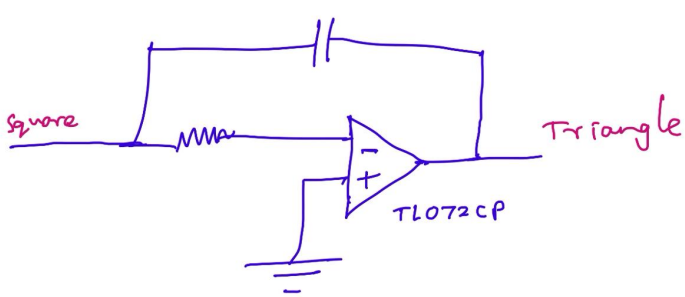

Figure 2: Integrator based triangle wave generator

The frequency of the triangular waveform is determined by the resistor and capacitor values of the integrator and the hysteresis characteristics of the Schmitt trigger. Frequency variation is achieved by switching timing capacitors and adjusting the associated resistance, allowing operation over the desired frequency range.

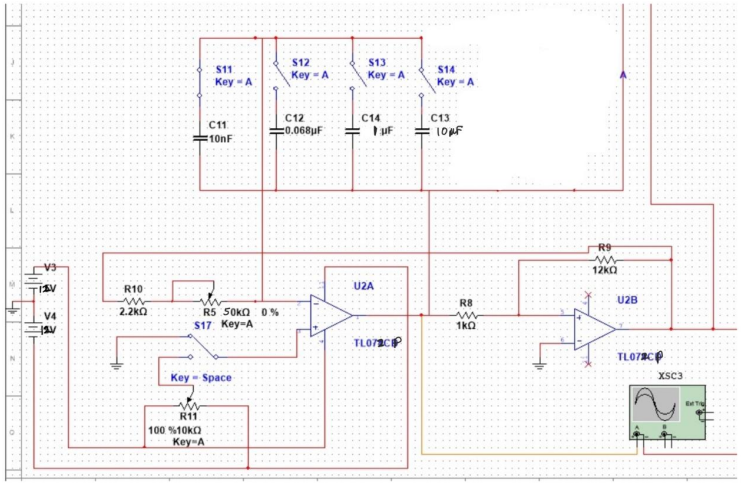

Figure 3: Square and triangle wave generator

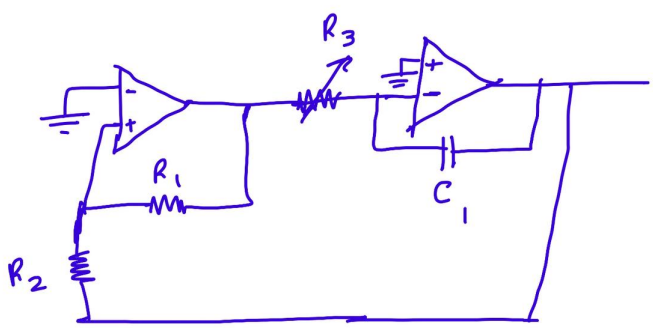

$$V_{pp} = 2 \times \frac{R_2}{R_1} \times V_{sat}$$

$$f = \frac{R_1}{4 R_3 R_2 C_1}$$

Figure 4: Resulting Frequency

3.5 Frequency Variation for Square and Triangle Wave Generation

Frequency variation for square and triangular wave generation is achieved using a capacitor bank connected to the integrator circuit. Different capacitors are selected using a switch to

define distinct frequency regions, while a potentiometer provides fine frequency adjustment within each selected range.

The use of multiple timing capacitors allows the function generator to cover a wide frequency span while maintaining stability and linearity of the generated waveforms.

Frequency Range	Capacitor Value
20 Hz – 130 Hz	10 µF
130 Hz – 1.5 kHz	1 µF
1.5 kHz – 15.6 kHz	68 nF
15.6 kHz – 20 kHz	10 nF

Table 1: Capacitor selection for square and triangle wave frequency ranges

3.6 Sine Wave Generation Using Wien Bridge Oscillator

The sine wave output is generated using a Wien bridge oscillator configuration due to its low distortion and good frequency stability. The oscillator employs a frequency-selective RC network in the feedback path, which determines the oscillation frequency.

Amplitude stabilization is achieved using the nonlinear characteristics of the feedback network, ensuring sustained oscillations without excessive distortion. The TL072CP operational amplifier is used in this stage because of its high slew rate and sufficient bandwidth for audio-frequency operation.

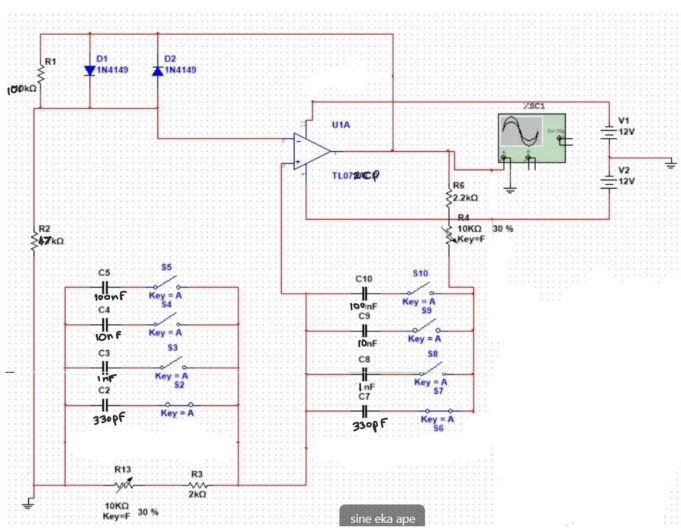

Figure 5: Vienn bridge Oscillator based sine wave generator

3.7 Frequency Variation for Sine Wave Generation

The frequency of the Wien bridge oscillator is controlled by selecting different capacitor values in the RC feedback network. A potentiometer is used in conjunction with these capacitors to allow continuous frequency variation within each range.

This method enables the sine wave generator to operate across the full audio frequency band while maintaining waveform purity.

Frequency Range	Capacitor Value
20 Hz – 690 Hz	100 nF
690 Hz – 5.5 kHz	10 nF
5.5 kHz – 12 kHz	1 nF
12 kHz – 20 kHz	330 pF

Table 2: Capacitor selection for sine wave frequency ranges

4 Selection of Components

4.1 Operational Amplifier Selection

The TLO72CP operational amplifier was selected due to its high slew rate of 14 V/µs and gain bandwidth product of 3 MHz, ensuring minimal distortion at higher frequencies.

4.2 Transistor Selection

2N2222 (NPN) and 2N3906 (PNP) transistors were used in the push-pull output stage to provide balanced current amplification.

5 Power Supply

A dual ±12 V power supply was designed using linear voltage regulators to meet the operational requirements of the analog circuitry.

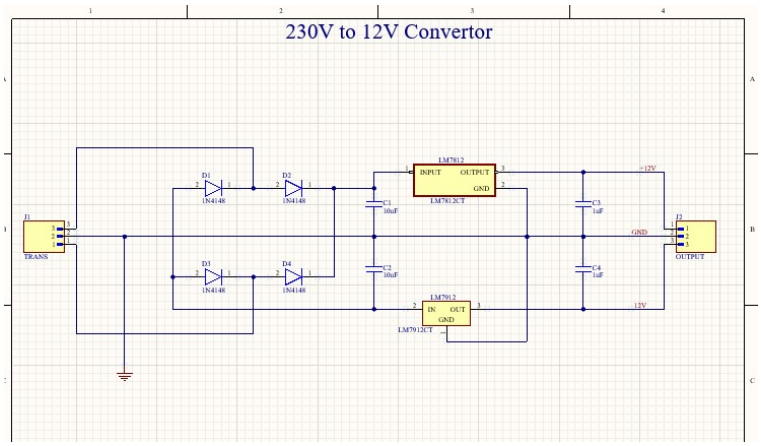

Figure 6: Dual power supply circuit

6 Push-Pull Output with Voltage Buffer, DC shifter and inverting amplifier

The output stage of the function generator consists of a DC offset control stage, a variable gain amplifier, a unity gain voltage buffer, and a push-pull output amplifier to ensure proper signal conditioning and sufficient current drive capability.

A controllable DC shift is introduced using the potentiometer R_{15}, which is connected between the dual supply rails of $+12\,\mathrm{V}$ and $-12\,\mathrm{V}$. By adjusting R_{15}, the reference voltage applied to the non-inverting input of the first operational amplifier is varied, allowing the output waveform to be shifted vertically without altering its shape.

The amplitude of the output signal is controlled using the potentiometer R_{16} in the feedback path of the operational amplifier. This configuration provides continuous gain adjustment while maintaining linear amplification of the input waveform.

The conditioned signal is then fed into a second operational amplifier configured as a unity gain voltage buffer. This buffer provides high input impedance and low output impedance, effectively isolating the signal-conditioning circuitry from the load and preventing loading effects.

Finally, a complementary push-pull emitter follower stage implemented using NPN and PNP transistors is employed to enhance the current-driving capability of the function generator. This stage allows the circuit to drive low-impedance loads while preserving waveform integrity and minimizing distortion at the output.

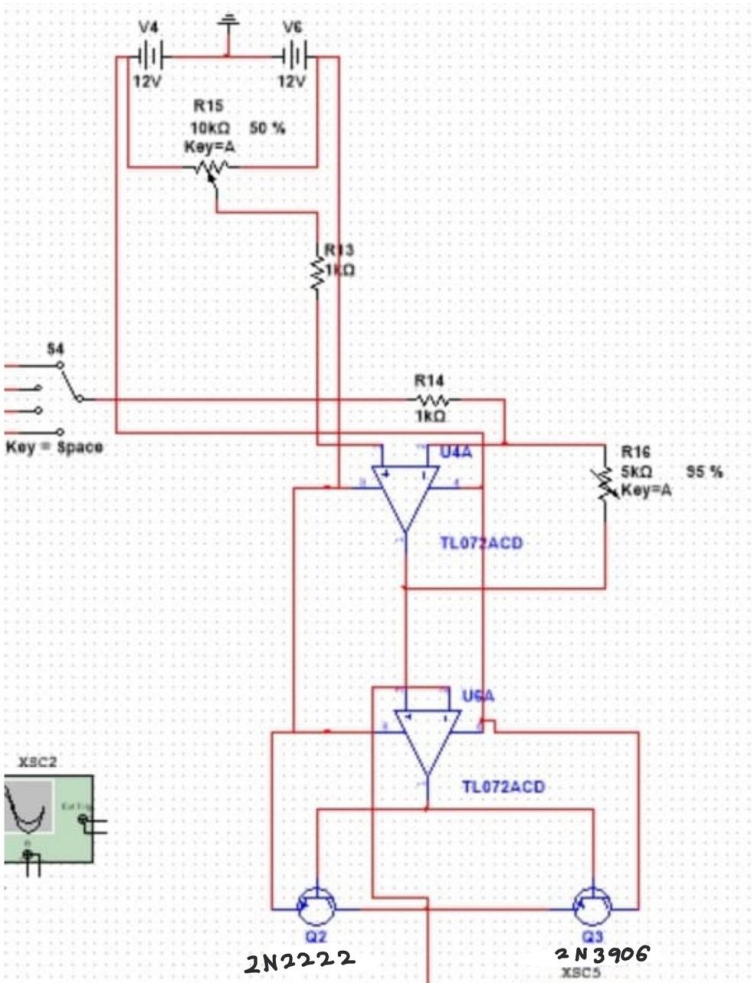

Figure 7: Output circuit

7 Simulation and Testing

7.1 Simulation

The complete circuit was simulated using NI Multisim. Frequency response, waveform integrity, and duty cycle variation were verified prior to hardware implementation.

7.2 Hardware Testing

The prototype was tested using an oscilloscope and resistive loads. Generated waveforms closely matched simulation results across the specified frequency and amplitude ranges.

8 PCB Design

A double-layer PCB was designed using Altium Designer, with careful grounding and signal routing to minimize noise.

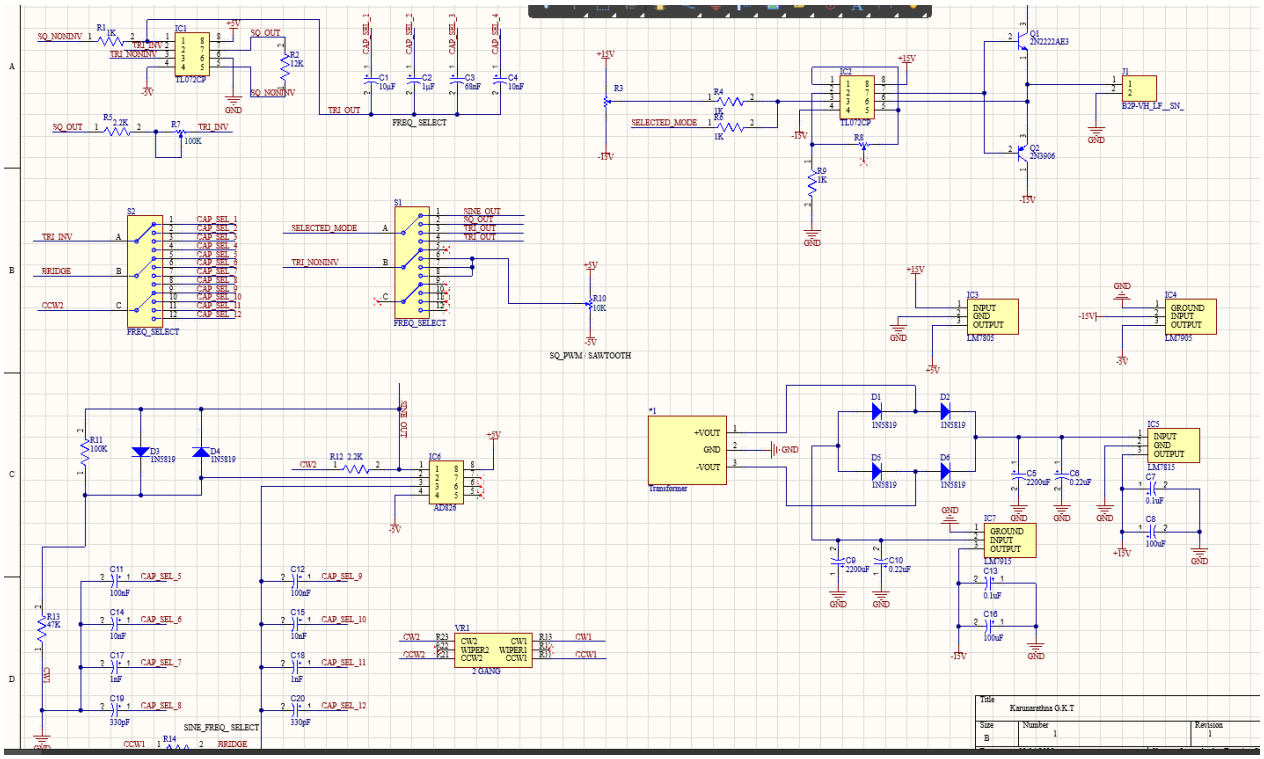

Figure 8: Schematic

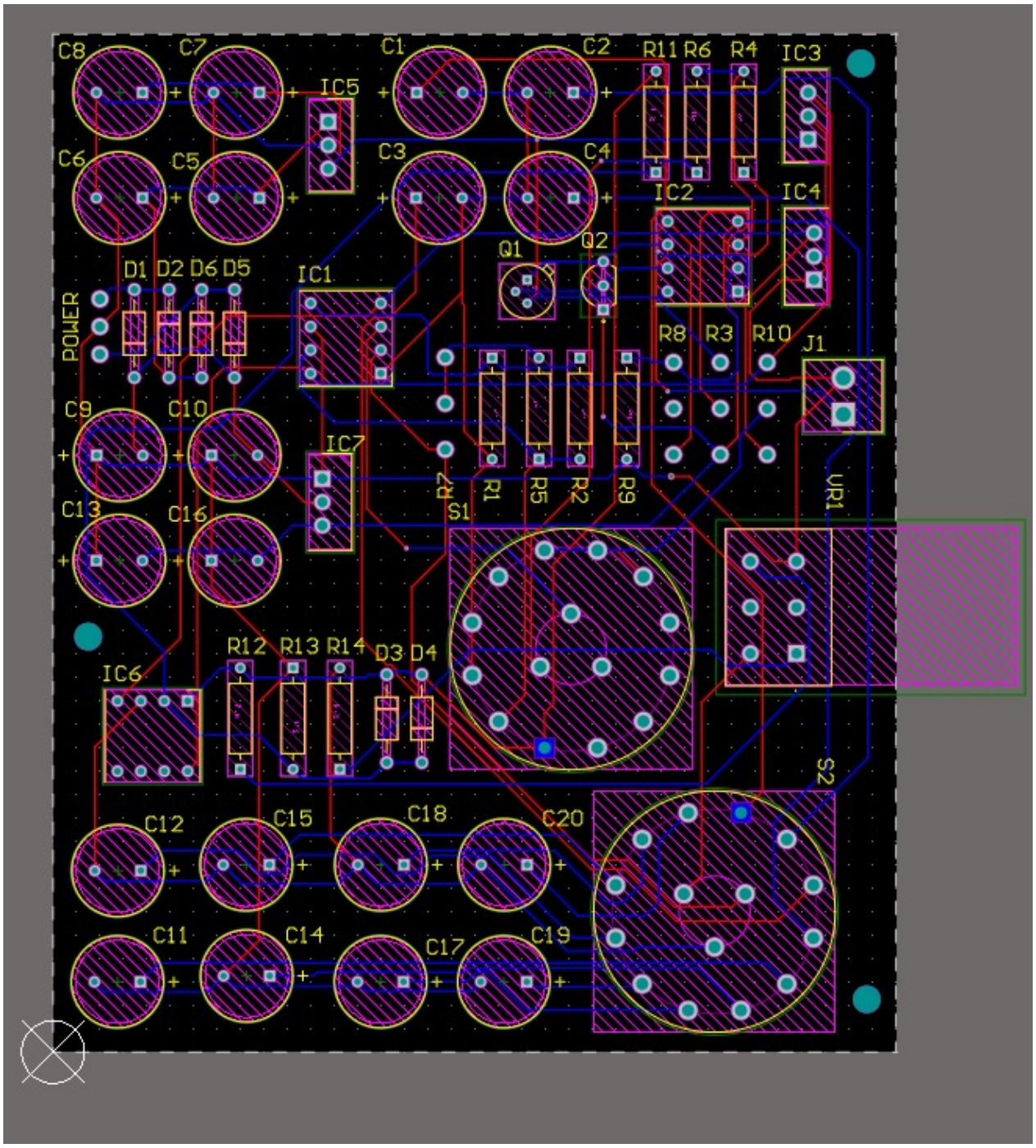
C8
C7
C1
C2
R11
R6
R4
IC3
IC5
C6
C5
C3
C4
IC2
IC4
Q1
Q2
D1
D2
D6
D5
IC1
POWER
R8
R3
R10
J1
C9
C10
IC7
R7
R1
R5
R2
R9
VR1
C13
C16
S1
R12
R13
R14
D3
D4
IC6
S2
C12
C15
C18
C20
C11
C14
C17
C19

Figure 9: PCB

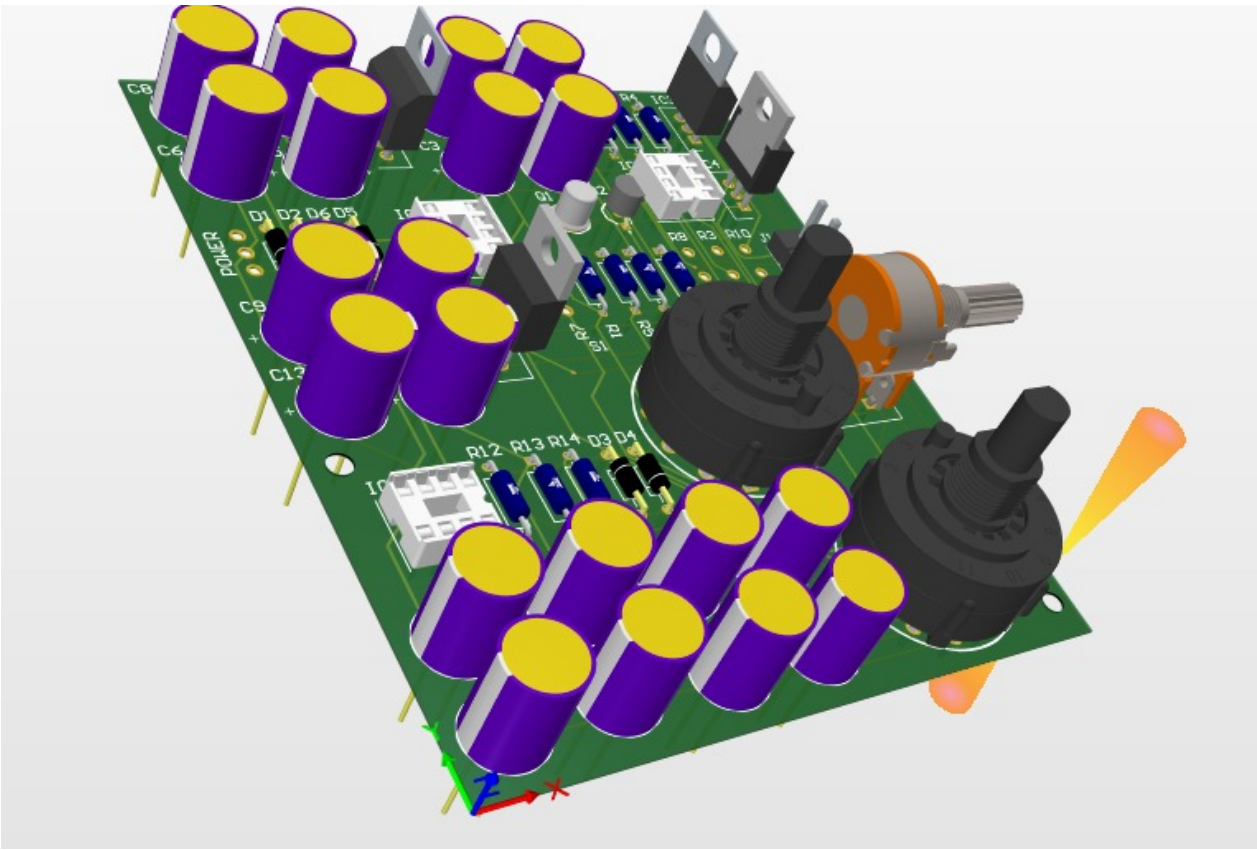

Figure 10: 3-D view

9 Enclosure Design

The enclosure was modeled using SolidWorks and fabricated to provide mechanical protection and user accessibility.

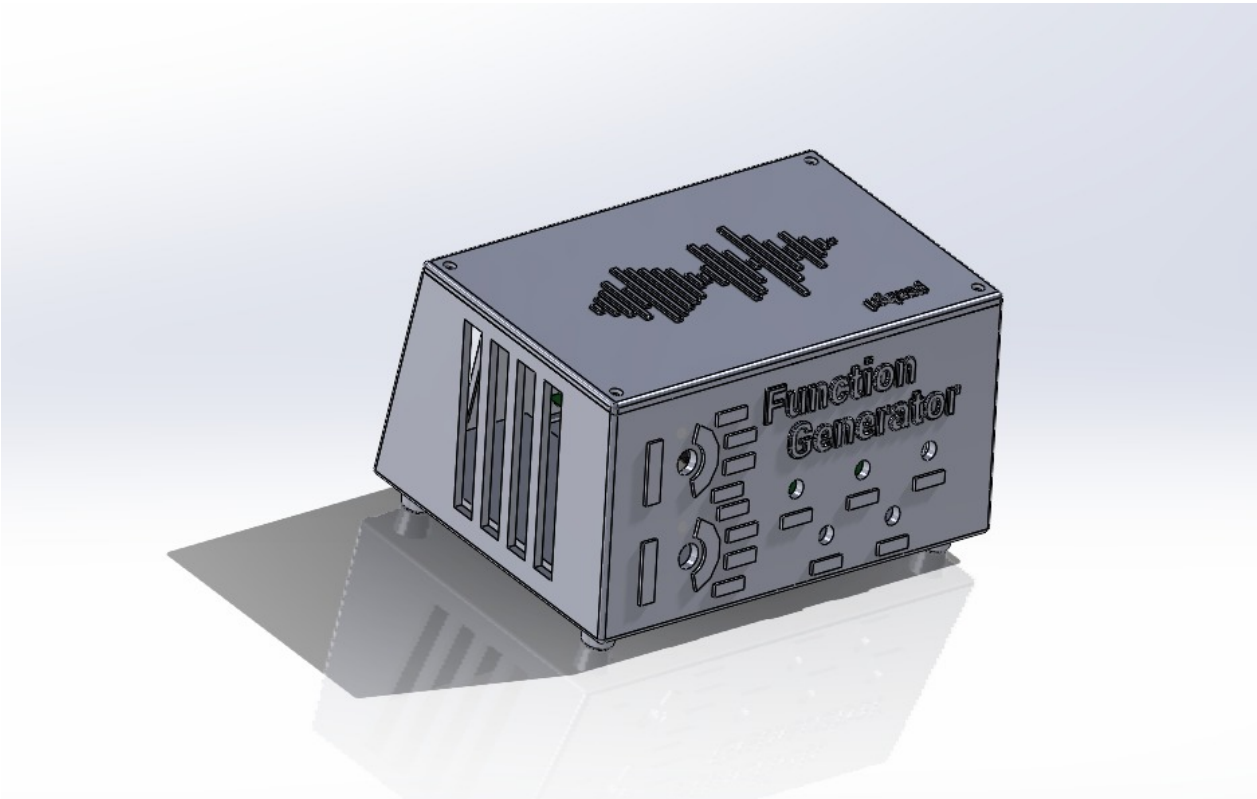

Figure 11: Enclosure

Figure 12: Physical Enclosure

10 Final Product Results

The following oscilloscope captures show the output waveforms obtained from the implemented analog function generator, demonstrating correct operation across different waveform modes and frequency ranges.

Figure 13: Oscilloscope results of the implemented analog function generator

11 Future Improvements

Future enhancements include improving sawtooth linearity and implementing higher-order filtering for cleaner sine wave generation.

12 Contribution of Group Members

- 230436X: Simulation, Prototyping, Assembly, Documentation
- 230180F: Prototyping, Enclosure Design,Assembly,Documentation
- 230536E: Simulation, Prototyping, Documentation, Assembly
- 230322U: Prototyping, PCB Design, Assembly.

13 References

1. Wikipedia, "Function Generator." Available: https://en.wikipedia.org/wiki/Function_generator

2. All About Circuits, "How to Build Your Own Function Generator Using Analog Devices' AD9833." Available: https://www.allaboutcircuits.com/projects/how-to-DIY-waveform-gene

3. Instructables, "DIY Function / Waveform Generator." Available: https://www.instructables.com/DIY-FunctionWaveform-Generator/

4. Learning About Electronics, "How to Build a Simple Function Generator with an LM324 Op Amp Chip." Available: http://www.learningaboutelectronics.com/Articles/Function-generator-circuit.php

5. Instructables, "Analog Function Generator." Available: https://www.instructables.com/Function-Generator/

6. EEEGuide, "Triangular Wave Generator Using Op Amp." Available: https://www.eeeguide.com/triangular-wave-generator-using-op-amp/

7. Analog Devices, "Precision Triangular-Wave Generator Uses a Single IC." Available: https://www.analog.com/en/technical-articles/precision-triangularwave-generator-use html

8. Floyd, T. L., *Electronics Fundamentals: Circuits, Devices and Applications*. Pearson Education. Available: https://www.amazon.com/Electronics-Fundamentals-Circuits-Devices- dp/0135072956