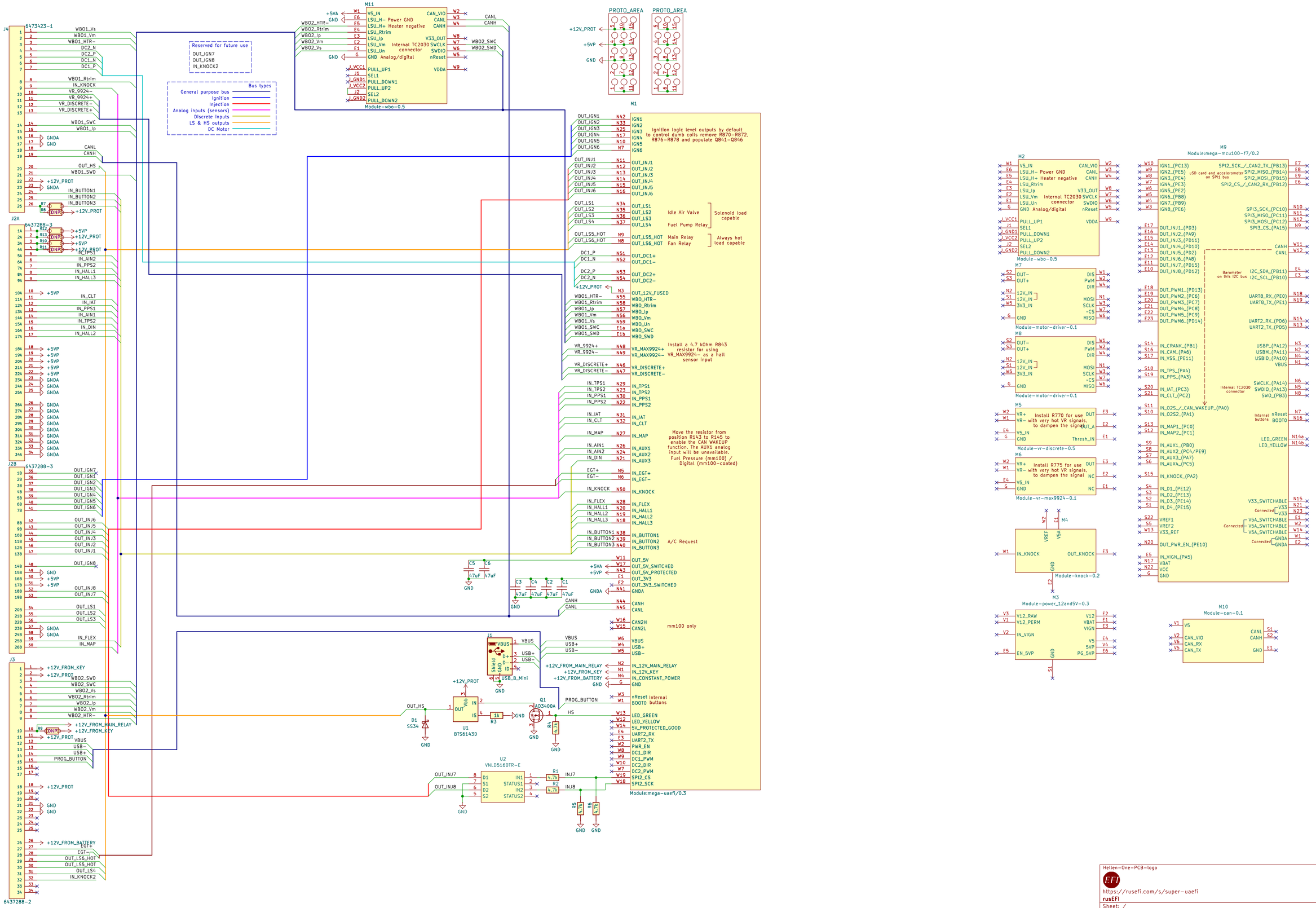

Hellen-One-PCB-logo

https://rusefi.com/s/super-uaefi

rusEFI

Sheet: /

File: super-uaefi.kicad_sch

Title: super-uaefi

Size: A2	Date: 2025-10-18	**Rev: b**
KiCad E.D.A. 8.0.9		Id: 1/1

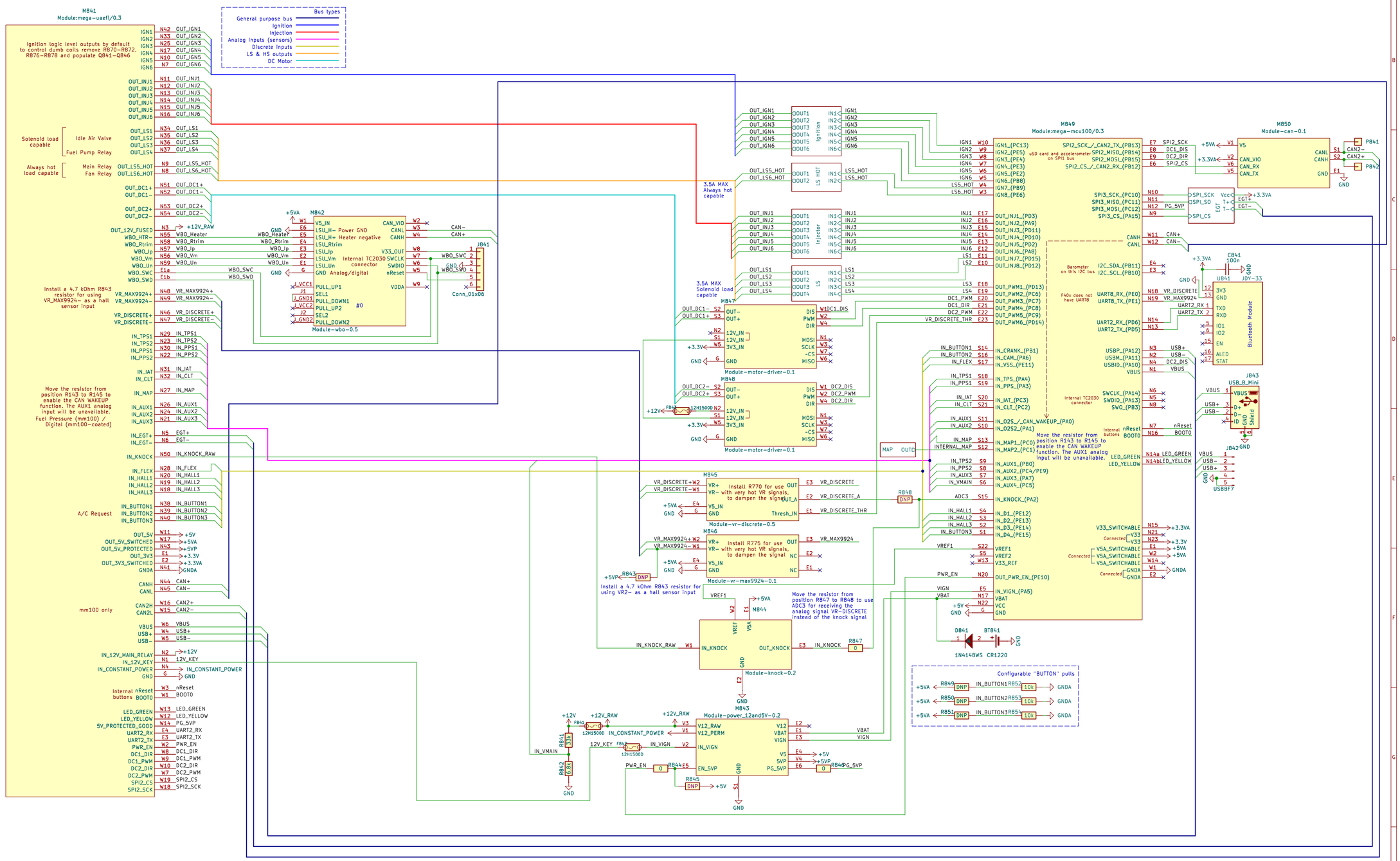
Bus types
General purpose bus
Ignition
Injection
Analog inputs (sensors)
Discrete inputs
LS & HS outputs
DC Motor
M841
Module:mega-uaefi/0.3
Ignition logic level outputs by default to control dumb coils remove R870-R872, R876-R878 and populate Q841-Q846
Solenoid load capable
Idle Air Valve
Fuel Pump Relay
Always hot load capable
Main Relay
Fan Relay
Install a 4.7 kOhm R843 resistor for using VR_MAX9924- as a hall sensor input
Move the resistor from position R143 to R145 to enable the CAN WAKEUP function. The AUX1 analog input will be unavailable.
Fuel Pressure (mm100) / Digital (mm100-coated)
A/C Request
mm100 only
Internal nReset buttons
M842
Module-wbo-0.5
Internal TC2030 connector
Conn_01x06
J841
3.5A MAX Always hot capable
3.5A MAX Solenoid load capable
M847
Module-motor-driver-0.1
M848
M845
Module-vr-discrete-0.5
Install R770 for use with very hot VR signals, to dampen the signal
M846
Module-vr-max9924-0.1
Install R775 for use with very hot VR signals, to dampen the signal
Install a 4.7 kOhm R843 resistor for using VR2- as a hall sensor input
M844
Module-knock-0.2
Move the resistor from position R847 to R848 to use ADC3 for receiving the analog signal VR-DISCRETE instead of the knock signal
M843
Module-power_12and5V-0.2
M849
Module:mega-mcu100/0.3
uSD card and accelerometer on SPI1 bus
Barometer on this I2C bus
F40x does not have UART8
Internal TC2030 connector
Internal buttons
Move the resistor from position R143 to R145 to enable the CAN WAKEUP function. The AUX1 analog input will be unavailable.
M850
Module-can-0.1
UB841
JDY-33
Bluetooth Module
J843
USB_B_Mini
J842
USBBF7
Configurable "BUTTON" pulls
rusEFI.com
Sheet: /
File: mega-uaefi.kicad_sch
Title: mega-uaefi
Size: A2
Date: 2024-08-15
Rev: 0.3
KiCad E.D.A. 8.0.4
Id: 1/7

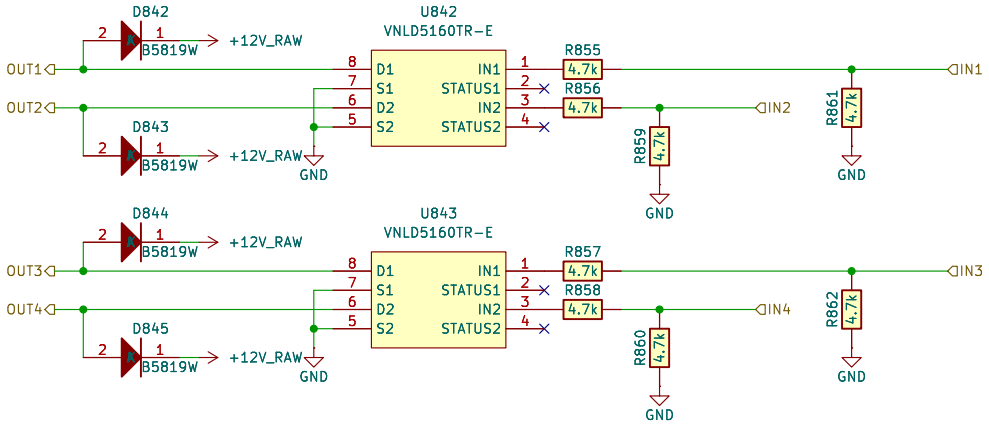

rusEFI.com

Sheet: /LS/

File: LS4.kicad_sch

Title: mega-uaefi

Size: A4	Date: 2024-08-15	Rev: 0.3
KiCad E.D.A. 8.0.4		Id: 3/7

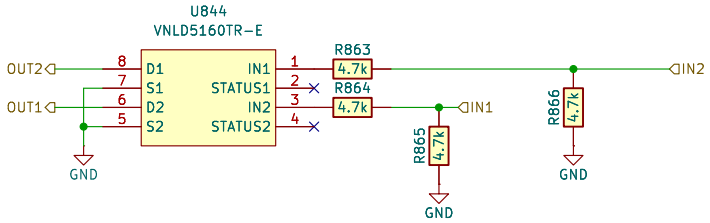

rusEFI.com

Sheet: /LS HOT/
File: LS_HOT.kicad_sch

Title: mega-uaefi

Size: A4	Date: 2024-08-15	Rev: 0.3
KiCad E.D.A. 8.0.4		Id: 6/7

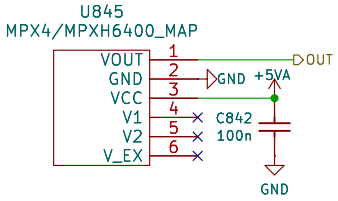

rusEFI.com

Sheet: /MAP/
File: MAP.kicad_sch

Title: mega-uaefi

Size: A4	Date: 2024-08-15	**Rev: 0.3**
KiCad E.D.A. 8.0.4		Id: 8/7

Remove R870–R872, R876–R878, and install Q841–Q846 for use with dumb coils

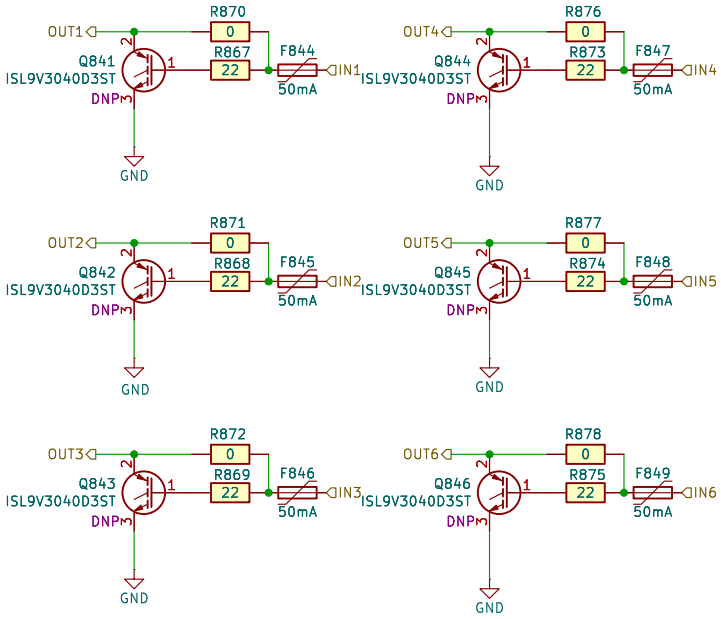

rusEFI.com

Sheet: /Ignition/
File: IGN6.kicad_sch

Title: mega–uaefi

Size: A4	Date: 2024–08–15	**Rev: 0.3**
KiCad E.D.A. 8.0.4		Id: 9/7

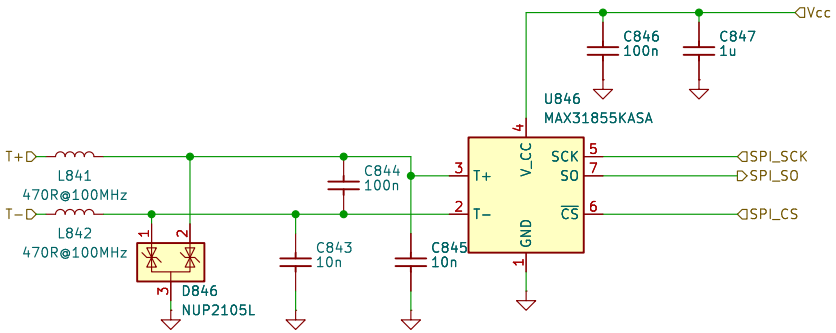

rusEFI.com

Sheet: /EGT/

File: egt.kicad_sch

Title: mega−uaefi

Size: A4	Date: 2024−08−15	Rev: 0.3
KiCad E.D.A. 8.0.4		Id: 9/7

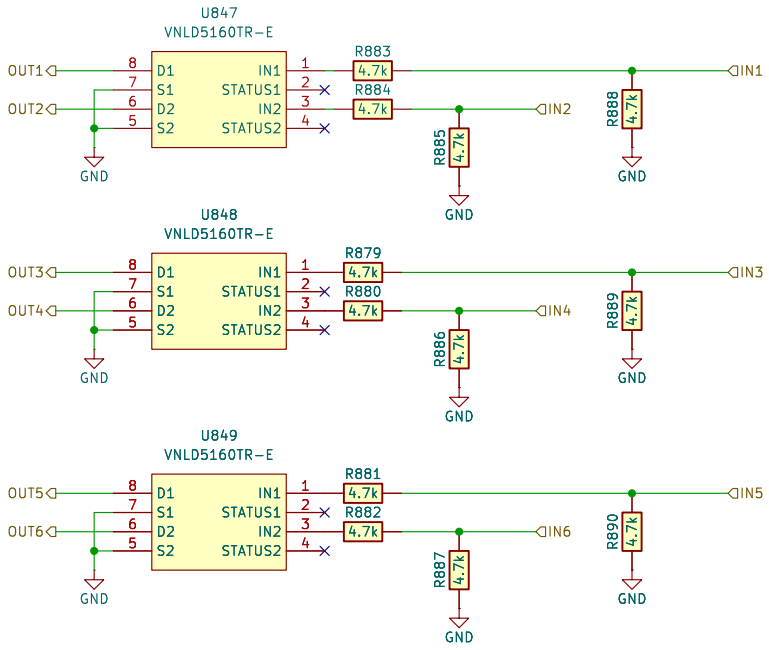

rusEFI.com

Sheet: /Injector/
File: INJ6.kicad_sch

Title: mega-uaefi

Size: A4	Date: 2024-08-15	**Rev: 0.3**
KiCad E.D.A. 8.0.4		Id: 10/7

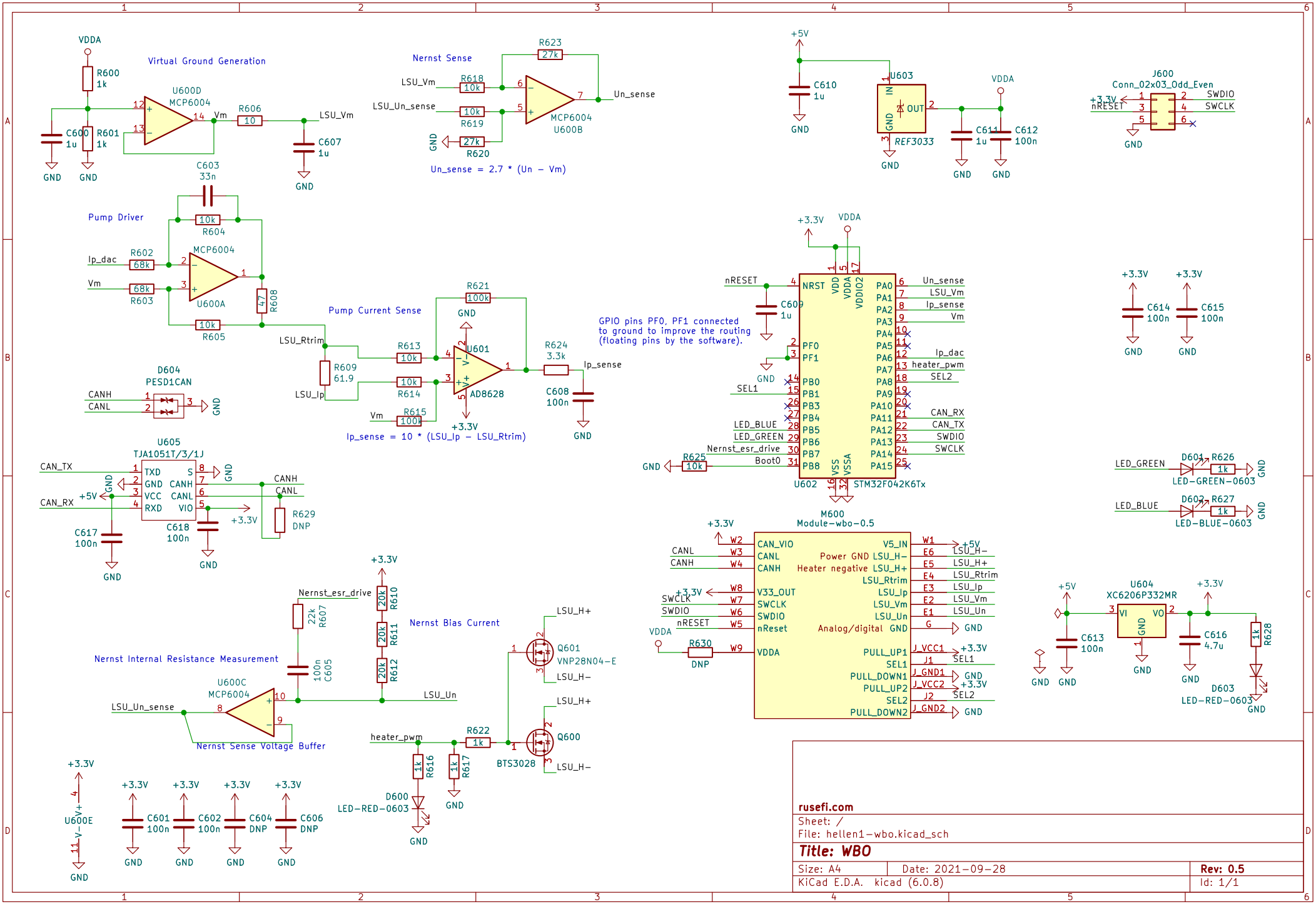
Virtual Ground Generation
U600D
MCP6004
VDDA
R600
1k
R601
1k
C600
1u
GND
Vm
R606
10
LSU_Vm
C607
1u
Nernst Sense
R623
27k
R618
10k
LSU_Vm
LSU_Un_sense
R619
10k
R620
27k
MCP6004
U600B
Un_sense
Un_sense = 2.7 * (Un − Vm)
+5V
C610
1u
U603
REF3033
VDDA
C611
1u
C612
100n
J600
Conn_02x03_Odd_Even
+3.3V
nRESET
SWDIO
SWCLK
C603
33n
Pump Driver
R604
10k
Ip_dac
R602
68k
Vm
R603
68k
MCP6004
U600A
R608
47
R605
10k
Pump Current Sense
LSU_Rtrim
R609
61.9
LSU_Ip
R613
10k
R614
10k
R615
100k
R621
100k
U601
AD8628
R624
3.3k
Ip_sense
C608
100n
Ip_sense = 10 * (LSU_Ip − LSU_Rtrim)
D604
PESD1CAN
CANH
CANL
U605
TJA1051T/3/1J
TXD
GND
VCC
RXD
S
CANH
CANL
VIO
CAN_TX
CAN_RX
C617
100n
C618
100n
R629
DNP
+3.3V
Nernst Internal Resistance Measurement
Nernst_esr_drive
22k
R607
100n
C605
R610
20k
R611
20k
R612
20k
Nernst Bias Current
LSU_Un
U600C
MCP6004
LSU_Un_sense
Nernst Sense Voltage Buffer
Q601
VNP28N04-E
LSU_H+
LSU_H−
Q600
BTS3028
heater_pwm
R622
1k
R616
1k
R617
1k
D600
LED-RED-0603
U600E
C601
100n
C602
100n
C604
DNP
C606
DNP
GPIO pins PF0, PF1 connected
to ground to improve the routing
(floating pins by the software).
U602
STM32F042K6Tx
NRST
VDD
VDDA
VDDIO2
PA0
PA1
PA2
PA3
PA4
PA5
PA6
PA7
PA8
PA9
PA10
PA11
PA12
PA13
PA14
PA15
PF0
PF1
PB0
PB1
PB3
PB4
PB5
PB6
PB7
PB8
VSS
VSSA
Un_sense
LSU_Vm
Ip_sense
Vm
Ip_dac
heater_pwm
SEL2
CAN_RX
CAN_TX
SWDIO
SWCLK
C609
1u
SEL1
LED_BLUE
LED_GREEN
Nernst_esr_drive
Boot0
R625
10k
C614
100n
C615
100n
D601
R626
1k
LED-GREEN-0603
D602
R627
1k
LED-BLUE-0603
M600
Module-wbo-0.5
CAN_VIO
CANL
CANH
V33_OUT
SWCLK
SWDIO
nReset
VDDA
V5_IN
Power GND
Heater negative
LSU_H−
LSU_H+
LSU_Rtrim
LSU_Ip
LSU_Vm
LSU_Un
Analog/digital GND
PULL_UP1
SEL1
PULL_DOWN1
PULL_UP2
SEL2
PULL_DOWN2
J_VCC1
J1
J_GND1
J_VCC2
J2
J_GND2
R630
DNP
U604
XC6206P332MR
VI
VO
C613
100n
C616
4.7u
R628
1k
D603
LED-RED-0603
rusefi.com
Sheet: /
File: hellen1-wbo.kicad_sch
Title: WBO
Size: A4
Date: 2021-09-28
Rev: 0.5
KiCad E.D.A. kicad (6.0.8)
Id: 1/1

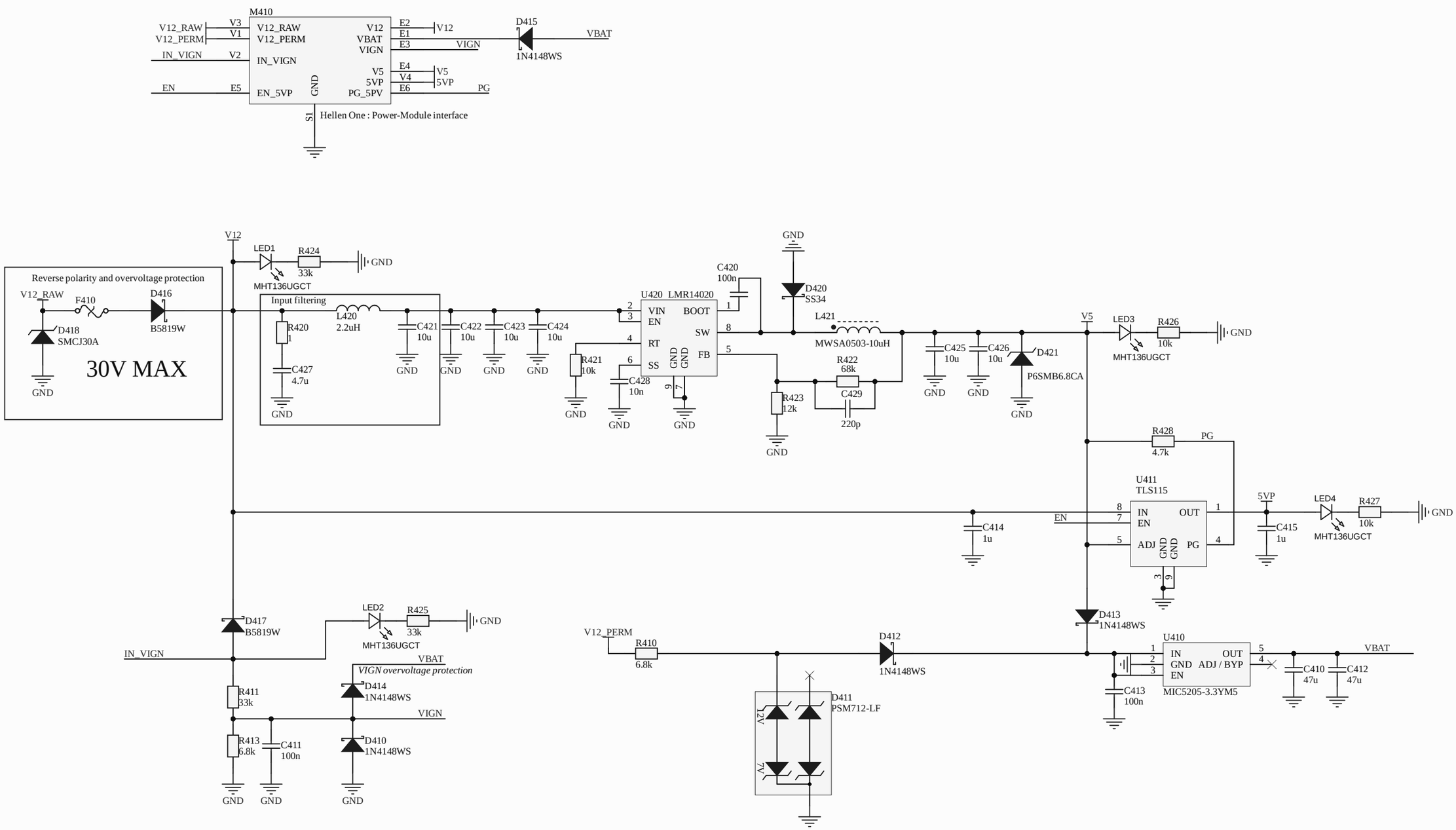

power_12and5V-0.3

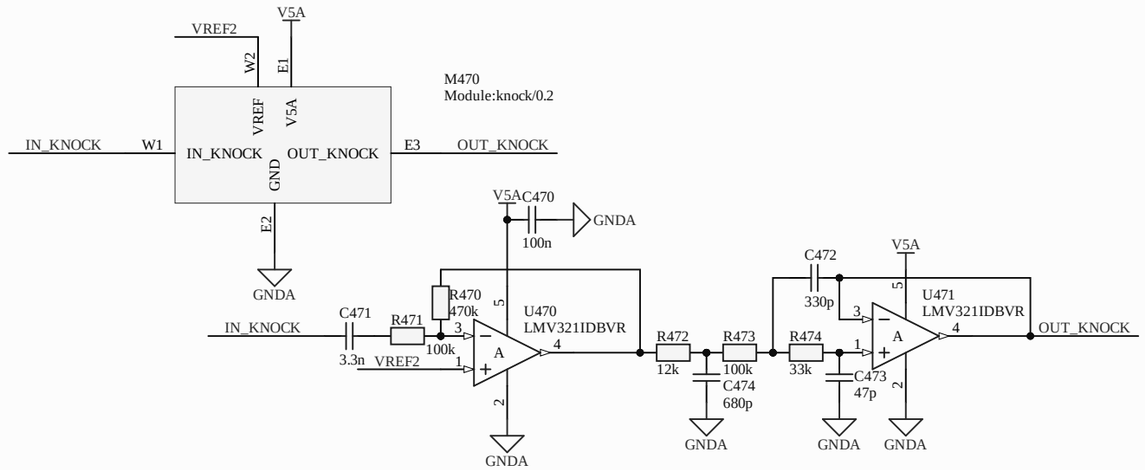

Title: ***Hellen-One Knock***			***rusEFI EMS*** ***Hellen-One Platform*** *https://rusefi.com/s/hellen72*
Size: A3	Author: andreika	Revision: 0.2	
Date: 15.02.2023		Sheet 1 of 1	

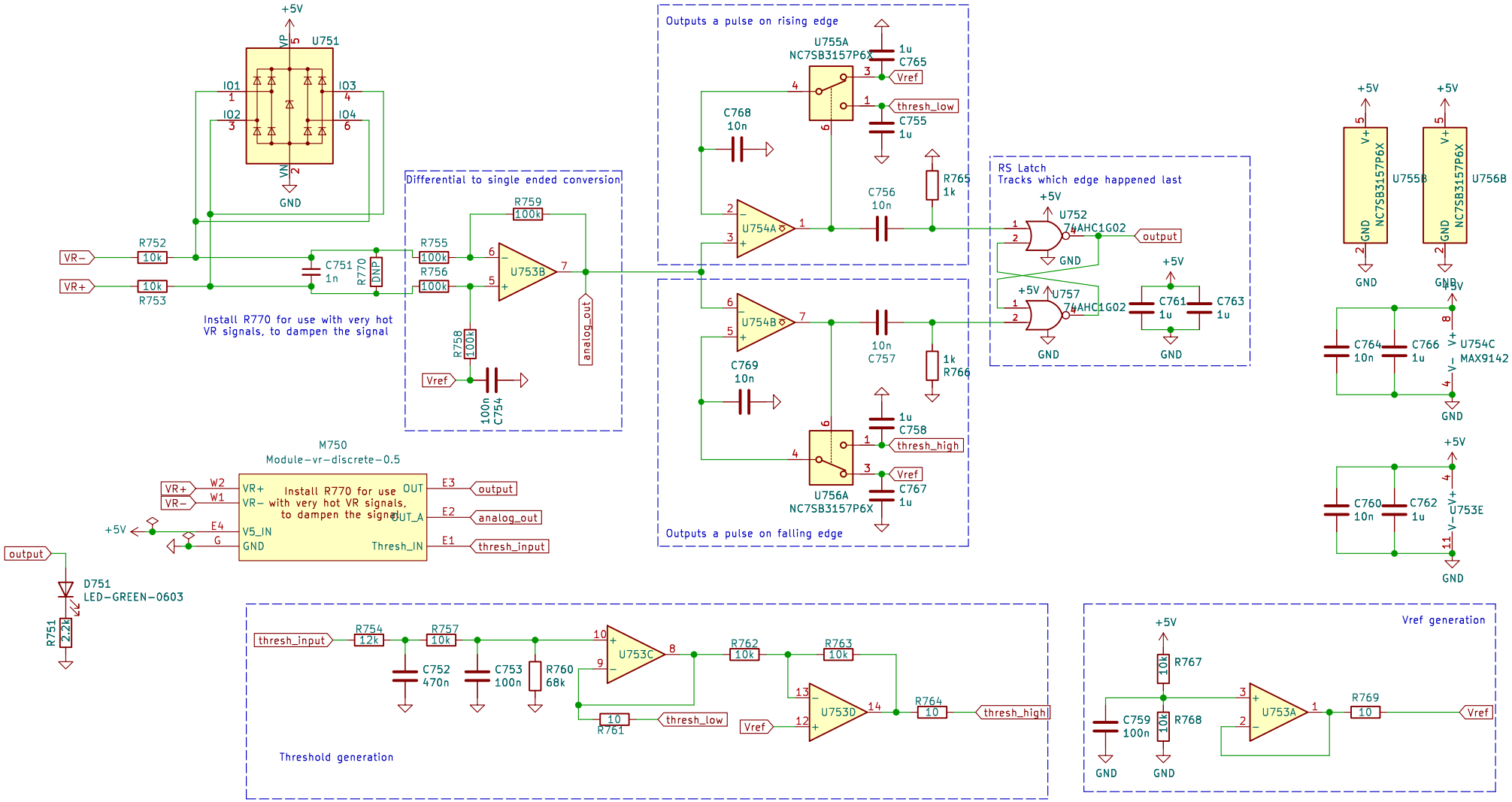

Sheet: /
File: hellen1−vr−discrete.kicad_sch

Title:

Size: A4	Date:	Rev:
KiCad E.D.A. kicad 7.0.9		Id: 1/1

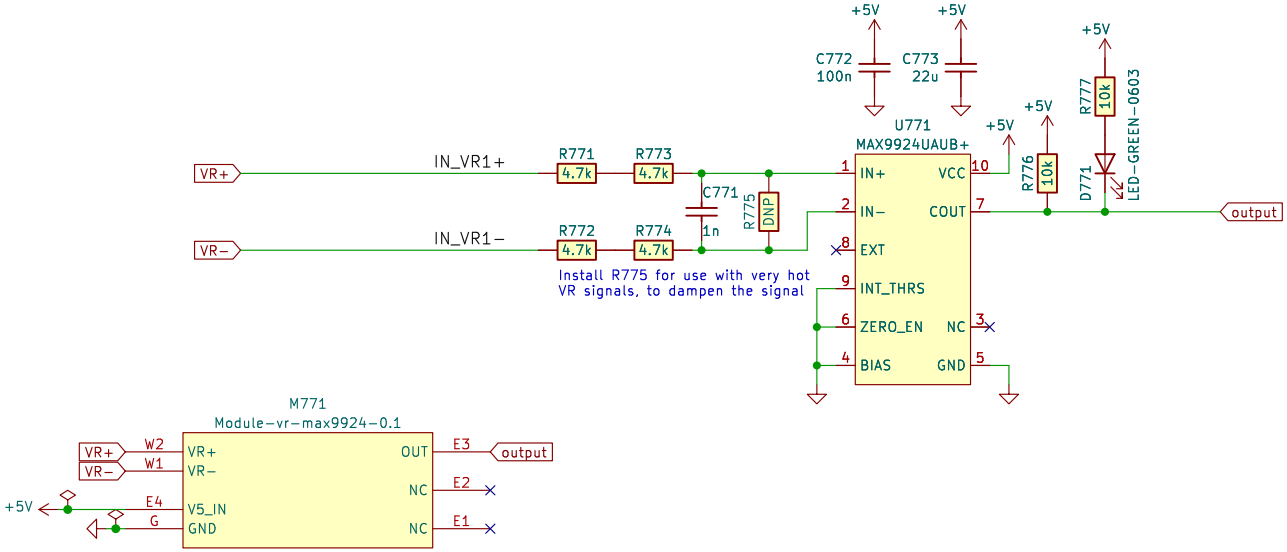

Sheet: /
File: hellen1−vr−max9924.kicad_sch

Title: VR MAX9924 module

Size: A4	Date: 2023−07−25	Rev: 0.1
KiCad E.D.A. eeschema 7.0.9		Id: 1/1

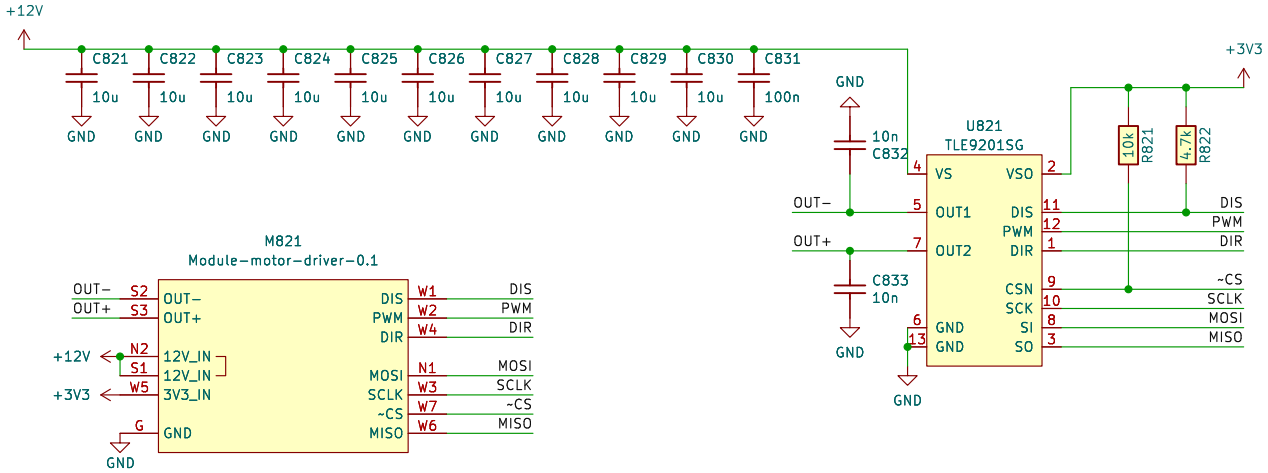

Sheet: /
File: hellen1−motor−driver.kicad_sch

Title: Motor−driver module

Size: A4	Date: 2024−03−07	**Rev: 0.1**
KiCad E.D.A. 8.0.3		Id: 1/1

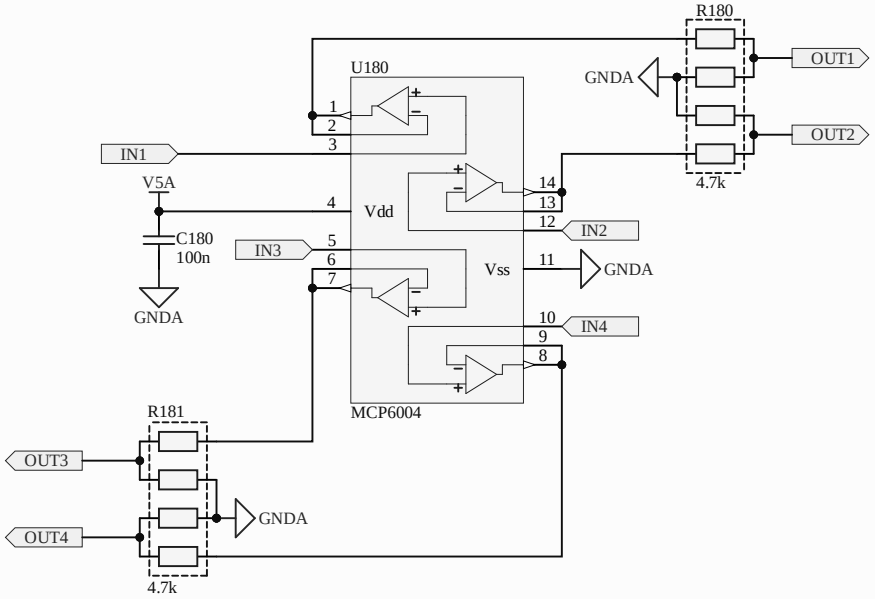
R180
U180
GNDA
OUT1
OUT2
IN1
V5A
4.7k
Vdd
C180
100n
IN3
IN2
Vss
GNDA
GNDA
IN4
MCP6004
R181
OUT3
GNDA
OUT4
4.7k

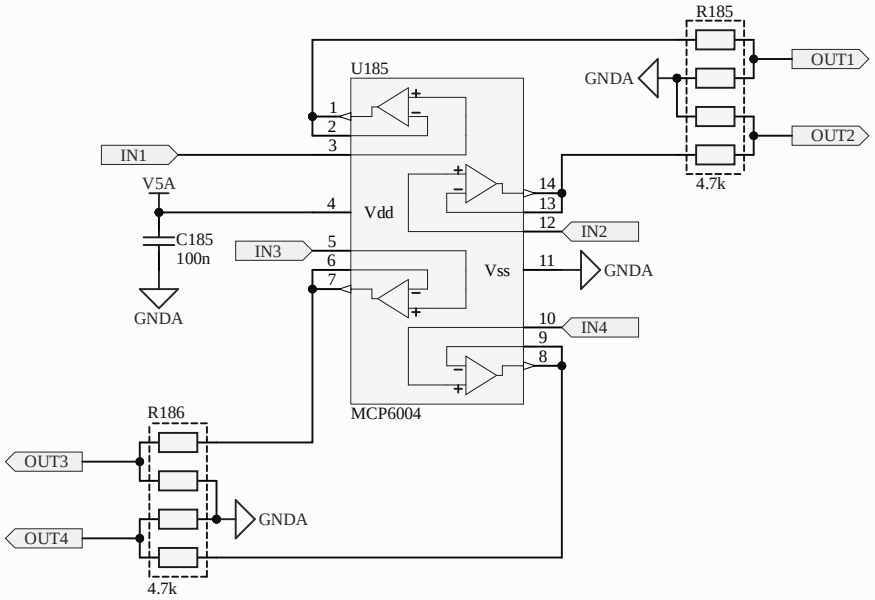
R185
U185
GNDA
OUT1
OUT2
IN1
V5A
4.7k
Vdd
C185
100n
IN3
IN2
Vss
GNDA
GNDA
IN4
MCP6004
R186
OUT3
GNDA
OUT4
4.7k

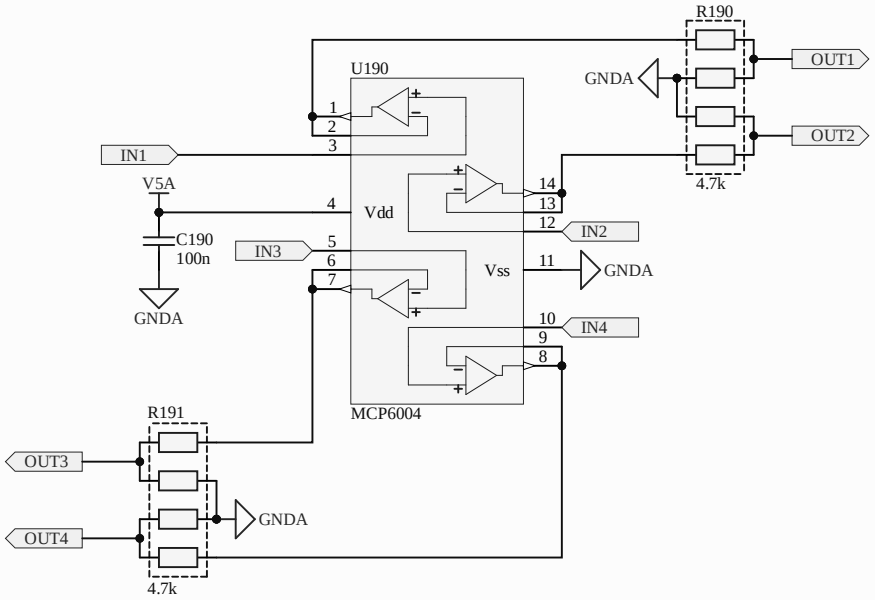
R190
U190
GNDA
OUT1
OUT2
IN1
V5A
C190
100n
GNDA
IN3
Vdd
Vss
IN2
GNDA
IN4
MCP6004
4.7k
R191
OUT3
OUT4
GNDA
4.7k

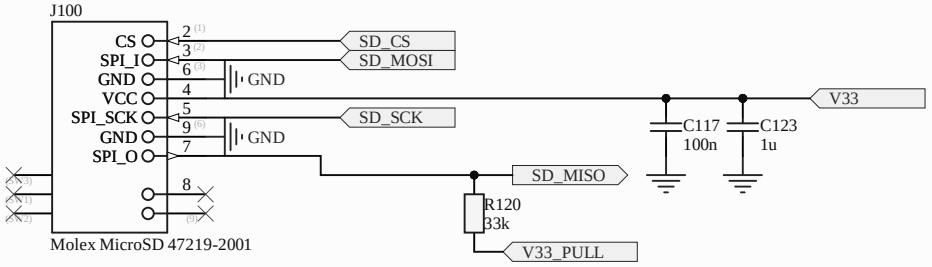
J100
CS
SPI_I
GND
VCC
SPI_SCK
GND
SPI_O
2
3
6
4
5
9
7
8
SD_CS
SD_MOSI
GND
SD_SCK
GND
SD_MISO
R120
33k
V33_PULL
C117
100n
C123
1u
V33
Molex MicroSD 47219-2001

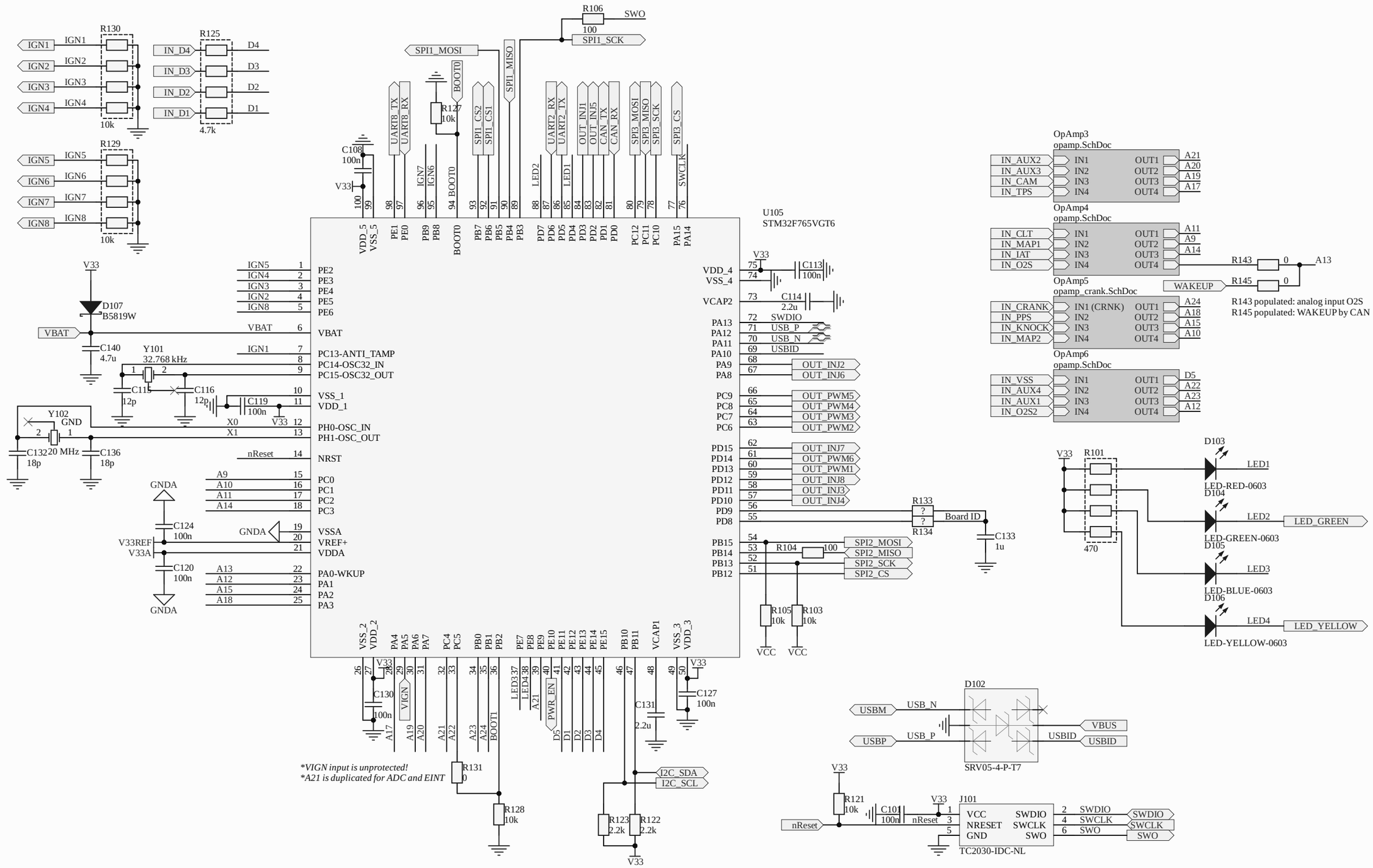
U105
STM32F765VGT6
R130
R125
R129
R106
SWO
SPI1_SCK
SPI1_MOSI
R127
10k
C108
100n
V33
D107
B5819W
VBAT
C140
4.7u
Y101
32.768 kHz
C115
12p
C116
12p
C119
100n
Y102
GND
20 MHz
C132
18p
C136
18p
GNDA
C124
100n
V33REF
V33A
C120
100n
C130
100n
C131
2.2u
C127
100n
R131
0
R128
10k
R123
2.2k
R122
2.2k
I2C_SDA
I2C_SCL
*VIGN input is unprotected!
*A21 is duplicated for ADC and EINT
C113
100n
C114
2.2u
R133
R134
Board ID
C133
1u
R104
100
R105
10k
R103
10k
VCC
OpAmp3
opamp.SchDoc
OpAmp4
opamp.SchDoc
OpAmp5
opamp_crank.SchDoc
OpAmp6
opamp.SchDoc
R143
R145
WAKEUP
A13
R143 populated: analog input O2S
R145 populated: WAKEUP by CAN
R101
470
D103
LED-RED-0603
D104
LED-GREEN-0603
D105
LED-BLUE-0603
D106
LED-YELLOW-0603
LED_GREEN
LED_YELLOW
D102
SRV05-4-P-T7
USBM
USBP
VBUS
USBID
R121
10k
C101
100n
nReset
J101
TC2030-IDC-NL
SWDIO
SWCLK
SWO

See pullups replacement file for actual values

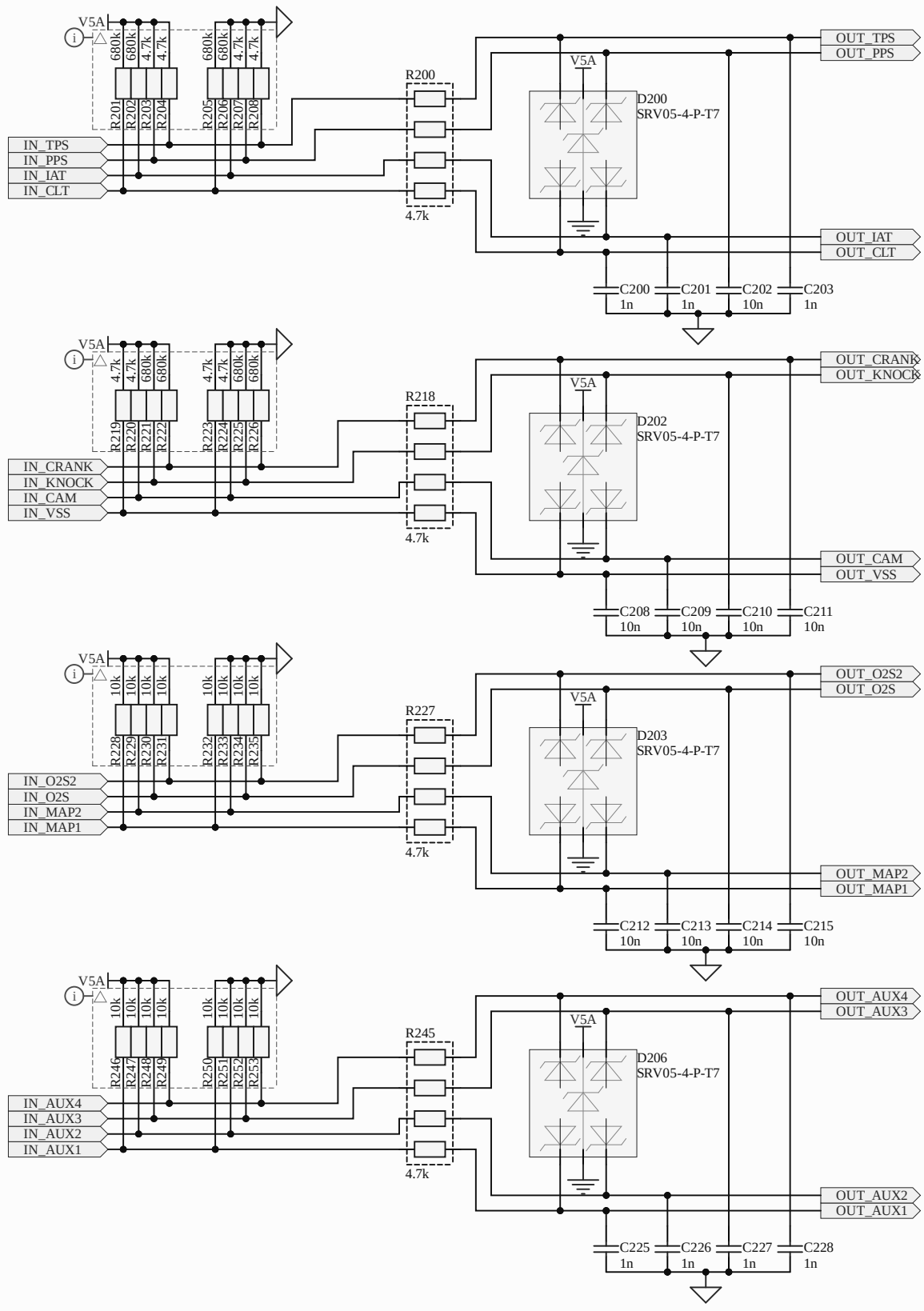

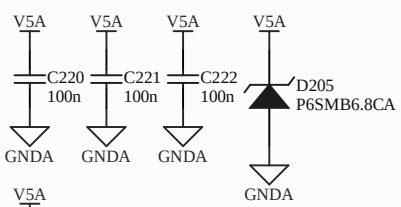

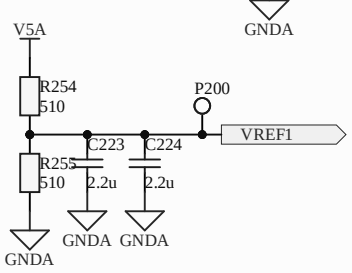

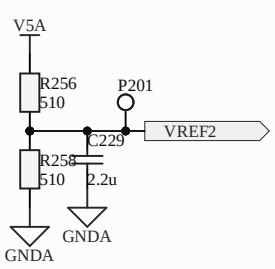

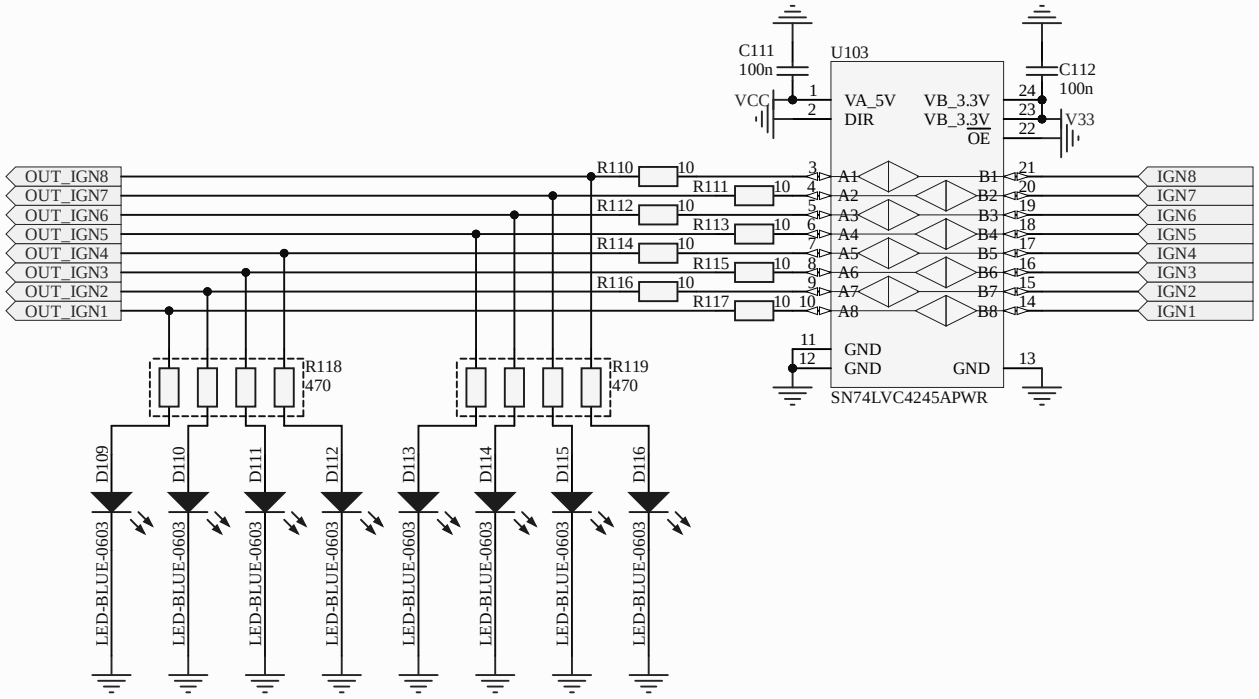
U103
C111
100n
C112
100n
VCC
V33
VA_5V
DIR
VB_3.3V
VB_3.3V
OE
GND
GND
GND
SN74LVC4245APWR
OUT_IGN8
OUT_IGN7
OUT_IGN6
OUT_IGN5
OUT_IGN4
OUT_IGN3
OUT_IGN2
OUT_IGN1
IGN8
IGN7
IGN6
IGN5
IGN4
IGN3
IGN2
IGN1
R110
R111
R112
R113
R114
R115
R116
R117
R118
470
R119
470
D109
D110
D111
D112
D113
D114
D115
D116
LED-BLUE-0603

See pullups replacement file for actual values

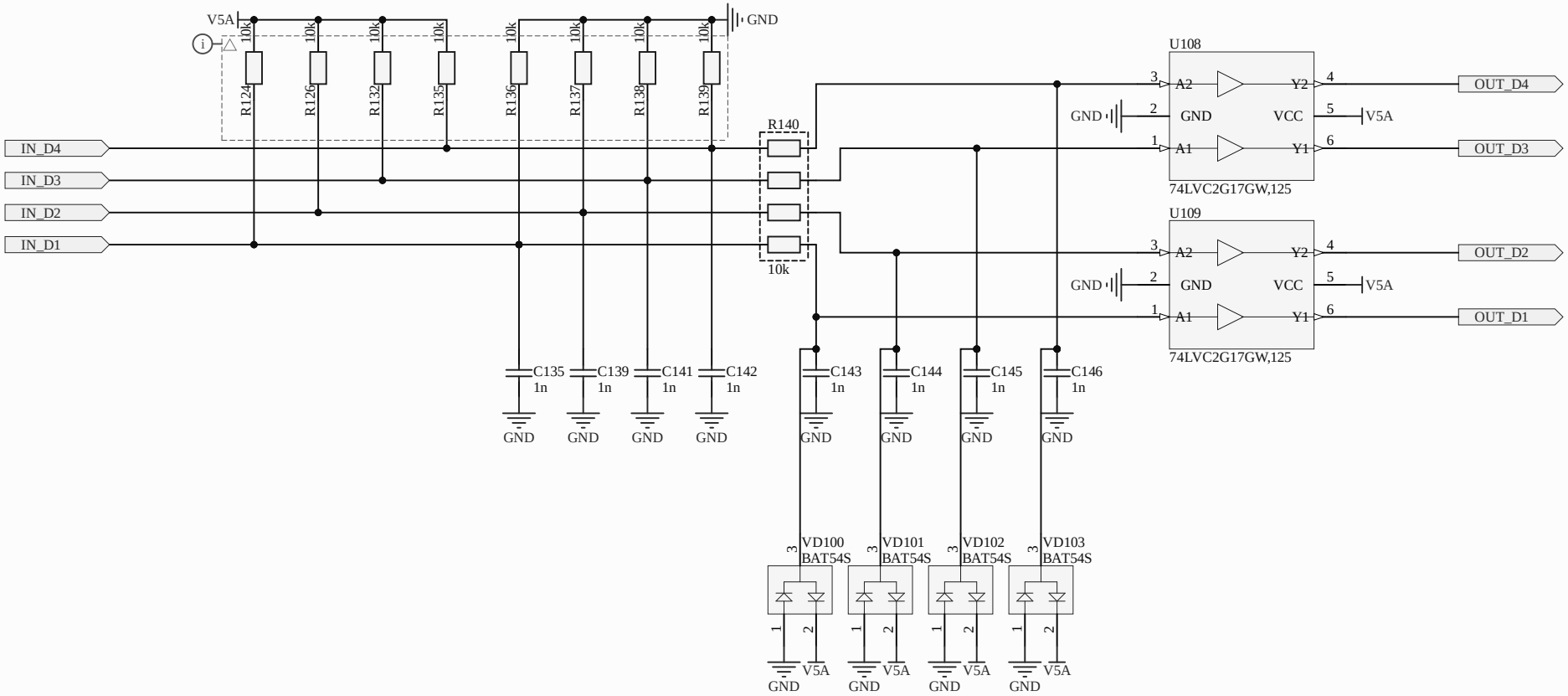

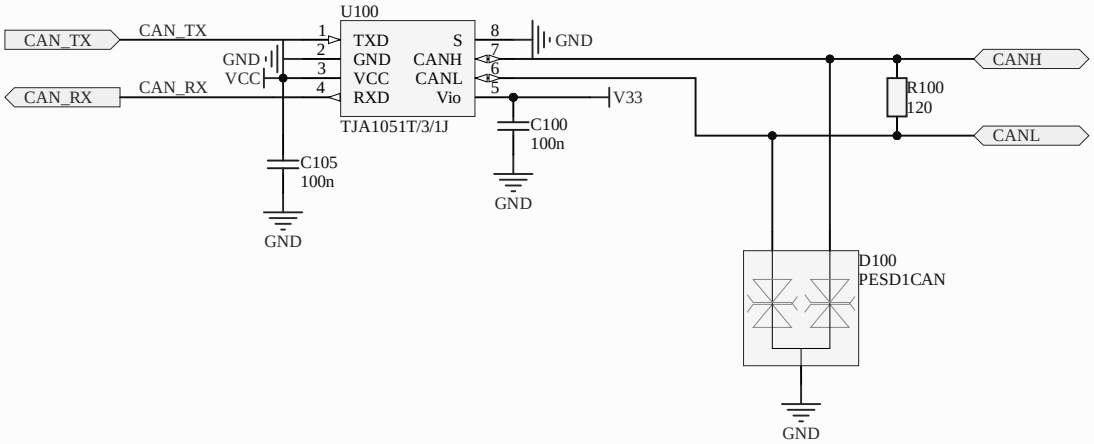
U100
CAN_TX
CAN_TX
CAN_RX
CAN_RX
GND
VCC
1
2
3
4
TXD
GND
VCC
RXD
S
CANH
CANL
Vio
8
7
6
5
GND
V33
TJA1051T/3/1J
C100
100n
GND
C105
100n
GND
CANH
CANL
R100
120
D100
PESD1CAN
GND

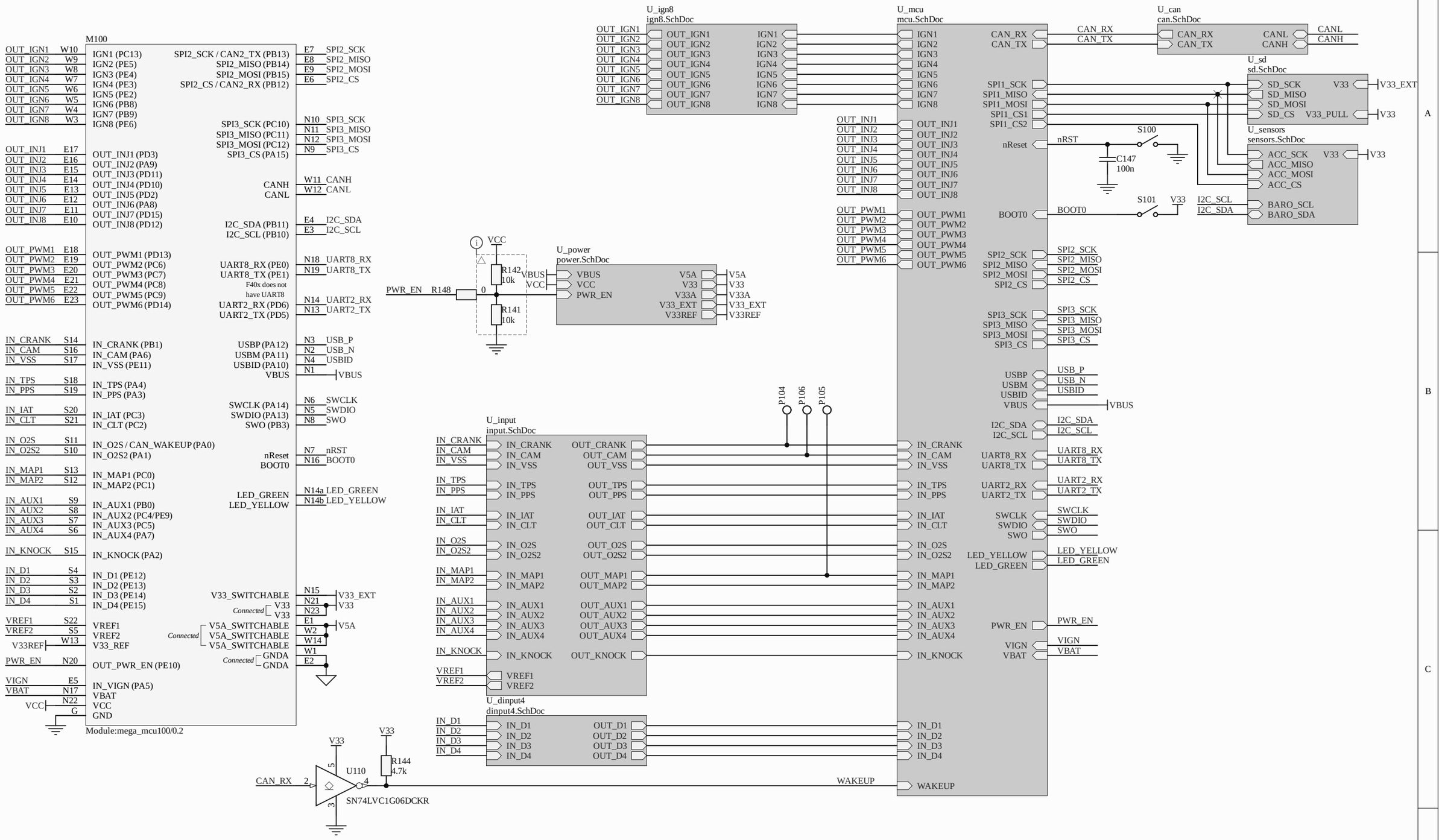
M100
Module:mega_mcu100/0.2
U_ign8
ign8.SchDoc
U_mcu
mcu.SchDoc
U_can
can.SchDoc
U_sd
sd.SchDoc
U_sensors
sensors.SchDoc
U_power
power.SchDoc
U_input
input.SchDoc
U_dinput4
dinput4.SchDoc
F40x does not have UART8
S100
S101
C147 100n
R142 10k
R141 10k
R148
R144 4.7k
U110
SN74LVC1G06DCKR
CAN_RX
WAKEUP
P104
P106
P105

More accurate threshold for "raw" connection of VR sensors

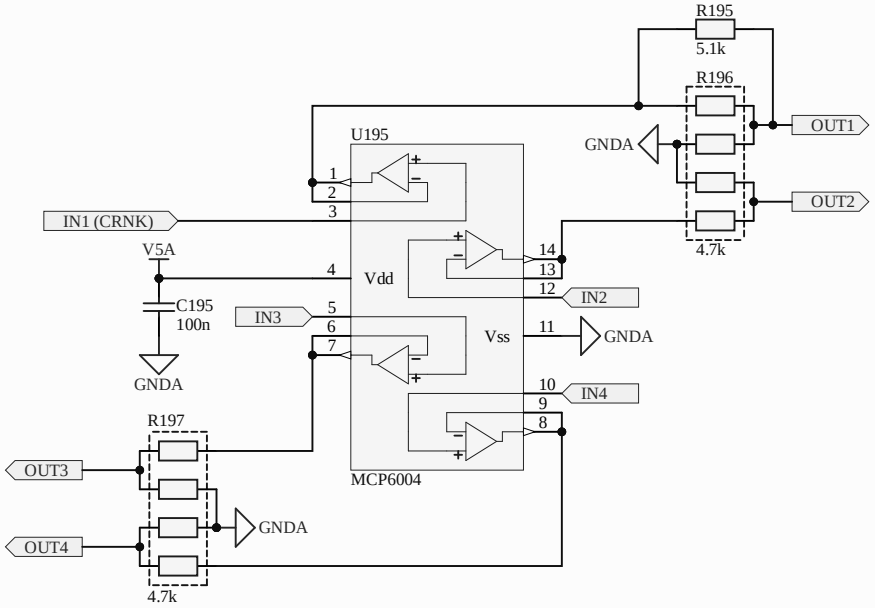

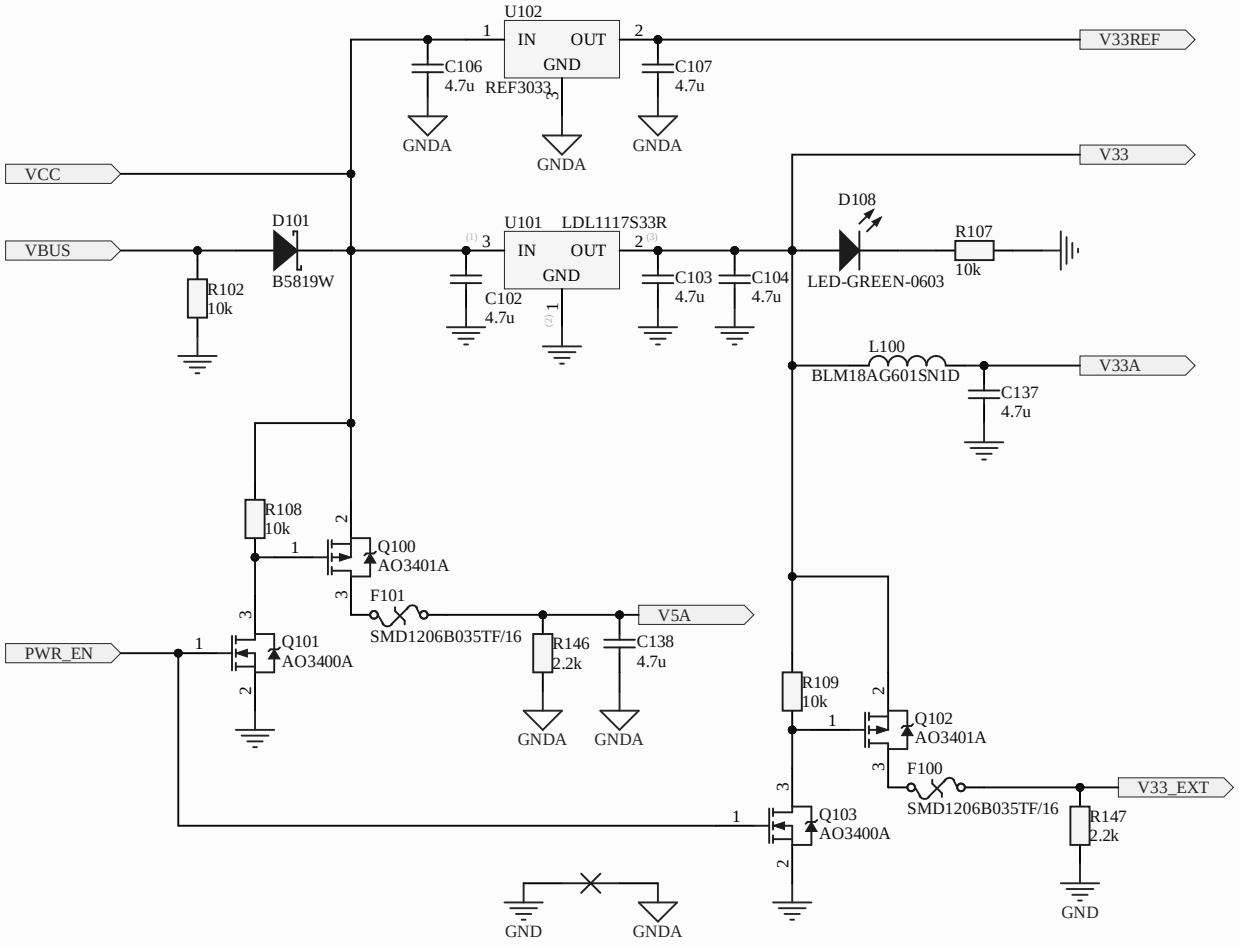

Title		
Size A4	Number	Revision
Date: 5.03.2025	Sheet of	
File: C:\Work\..\power.SchDoc	Drawn By:	

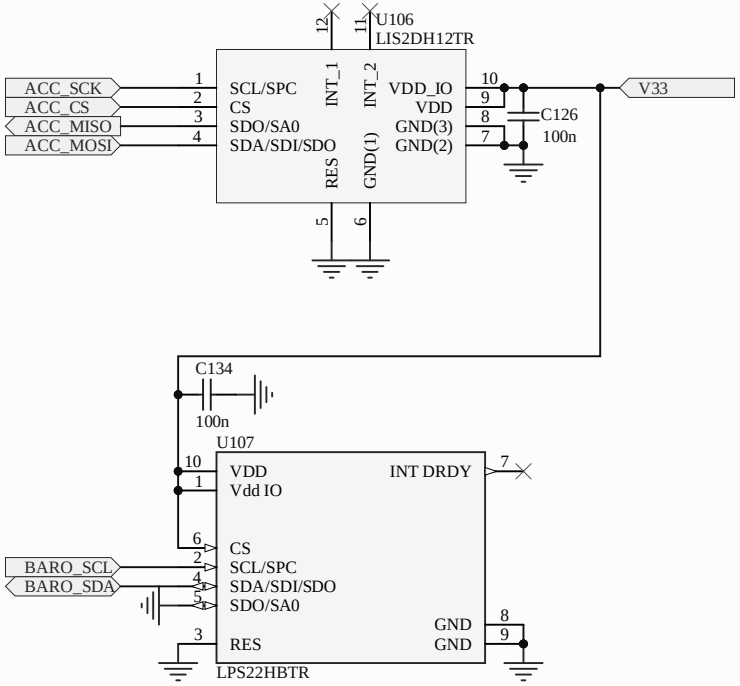
U106
LIS2DH12TR
ACC_SCK
ACC_CS
ACC_MISO
ACC_MOSI
SCL/SPC
CS
SDO/SA0
SDA/SDI/SDO
INT_1
INT_2
RES
GND(1)
VDD_IO
VDD
GND(3)
GND(2)
C126
100n
V33
C134
100n
U107
VDD
Vdd IO
INT DRDY
CS
SCL/SPC
SDA/SDI/SDO
SDO/SA0
RES
GND
GND
BARO_SCL
BARO_SDA
LPS22HBTR

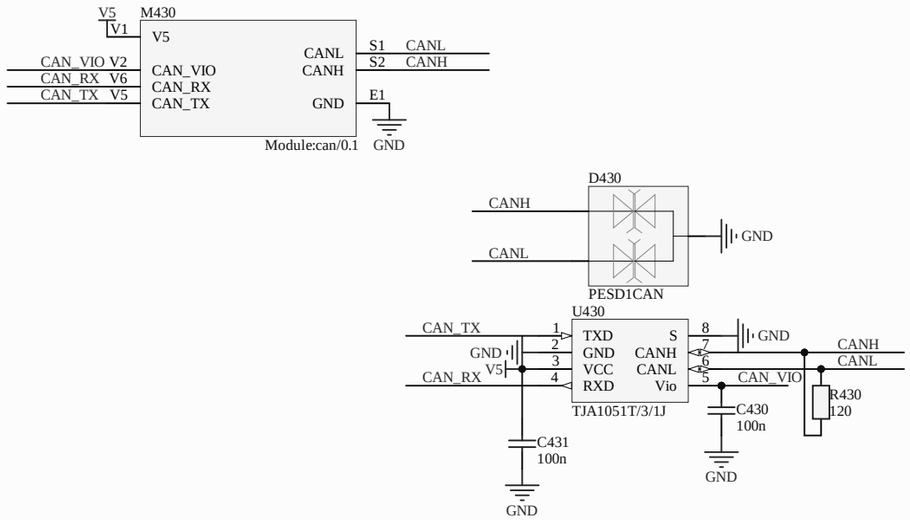

Title: ***Hellen-One CAN***			***rusEFI EMS*** ***Hellen-One Platform*** *https://rusefi.com/s/hellen72*
Size: A3	Author: andreika	Revision: 0.1	
Date: 02.03.2021		Sheet 1 of 1	