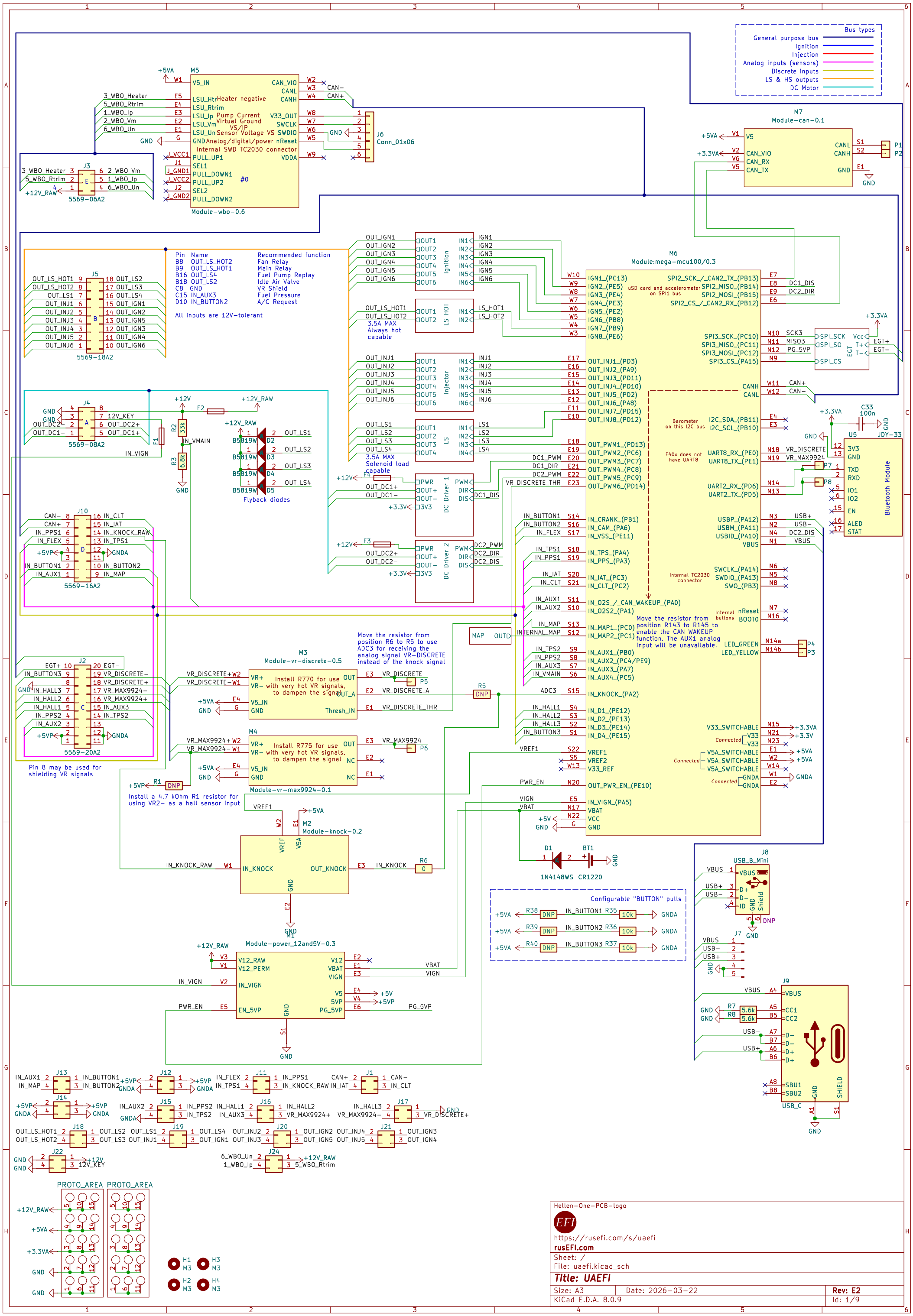
Bus types
General purpose bus
Ignition
Injection
Analog inputs (sensors)
Discrete inputs
LS & HS outputs
DC Motor
M5
Module-wbo-0.6
V5_IN
LSU_Htr Heater negative
LSU_Rtrim
LSU_Ip Pump Current
LSU_Vm Virtual Ground
VS/IP
LSU_Un Sensor Voltage VS
GND Analog/digital/power nReset
Internal SWD TC2030 connector
PULL_UP1
SEL1
PULL_DOWN1
PULL_UP2
SEL2
PULL_DOWN2
CAN_VIO
CANL
CANH
V33_OUT
SWCLK
SWDIO
VDDA
J6
Conn_01x06
M7
Module-can-0.1
CAN_VIO
CAN_RX
CAN_TX
J3
5569-06A2
J5
5569-18A2
Pin Name Recommended function
B8 OUT_LS_HOT2 Fan Relay
B9 OUT_LS_HOT1 Main Relay
B16 OUT_LS4 Fuel Pump Replay
B18 OUT_LS2 Idle Air Valve
C8 GND VR Shield
C15 IN_AUX3 Fuel Pressure
D10 IN_BUTTON2 A/C Request
All inputs are 12V-tolerant
Ignition
LS HOT
3.5A MAX
Always hot
capable
Injector
LS
3.5A MAX
Solenoid load
capable
DC Driver 1
DC Driver 2
M6
Module:mega-mcu100/0.3
uSD card and accelerometer on SPI1 bus
Barometer on this I2C bus
F40x does not have UART8
Internal TC2030 connector
Internal buttons
Move the resistor from position R143 to R145 to enable the CAN WAKEUP function. The AUX1 analog input will be unavailable.
J4
5569-08A2
Flyback diodes
J10
5569-16A2
J2
5569-20A2
Pin 8 may be used for shielding VR signals
M3
Module-vr-discrete-0.5
Install R770 for use with very hot VR signals, to dampen the signal
Move the resistor from position R6 to R5 to use ADC3 for receiving the analog signal VR-DISCRETE instead of the knock signal
M4
Module-vr-max9924-0.1
Install R775 for use with very hot VR signals, to dampen the signal
Install a 4.7 kOhm R1 resistor for using VR2- as a hall sensor input
M2
Module-knock-0.2
M1
Module-power_12and5V-0.3
U5
JDY-33
Bluetooth Module
C33
100n
D1
1N4148WS
BT1
CR1220
Configurable "BUTTON" pulls
J8
USB_B_Mini
J7
J9
USB_C
J13
J12
J11
J1
J14
J15
J16
J17
J18
J19
J20
J21
J22
J24
PROTO_AREA
H1 M3
H2 M3
H3 M3
H4 M3
Hellen-One-PCB-logo
https://rusefi.com/s/uaefi
rusEFI.com
Sheet: /
File: uaefi.kicad_sch
Title: UAEFI
Size: A3
Date: 2026-03-22
Rev: E2
KiCad E.D.A. 8.0.9
Id: 1/9

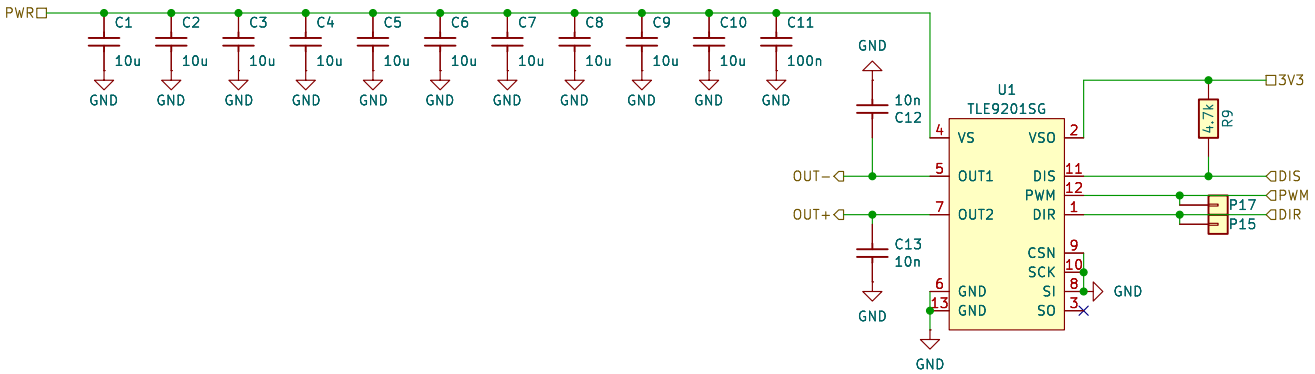

rusEFI.com

Sheet: /DC Driver 1/

File: DC_MOTOR_0.1.kicad_sch

Title: UAEFI

Size: A4	Date: 2025-04-30	Rev: E
KiCad E.D.A. 8.0.9		Id: 2/9

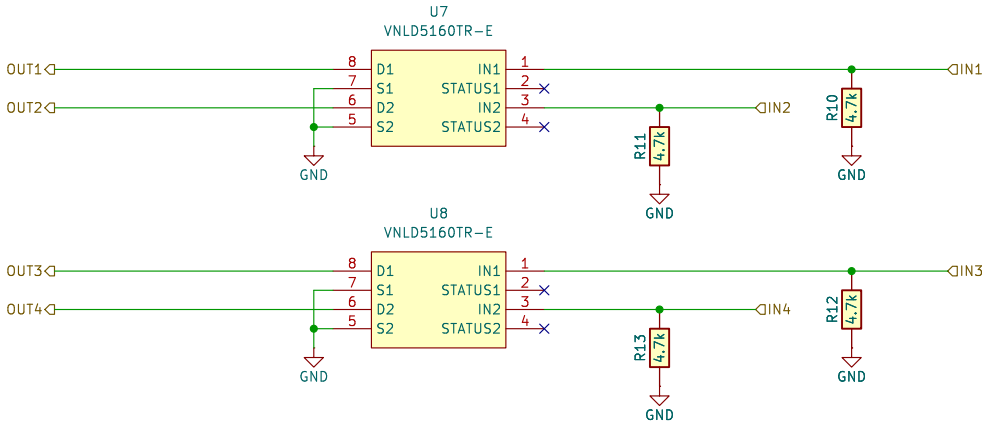

rusEFI.com

Sheet: /LS/

File: LS4.kicad_sch

Title: UAEFI

Size: A4	Date: 2025-04-30	Rev: E
KiCad E.D.A. 8.0.9		Id: 3/9

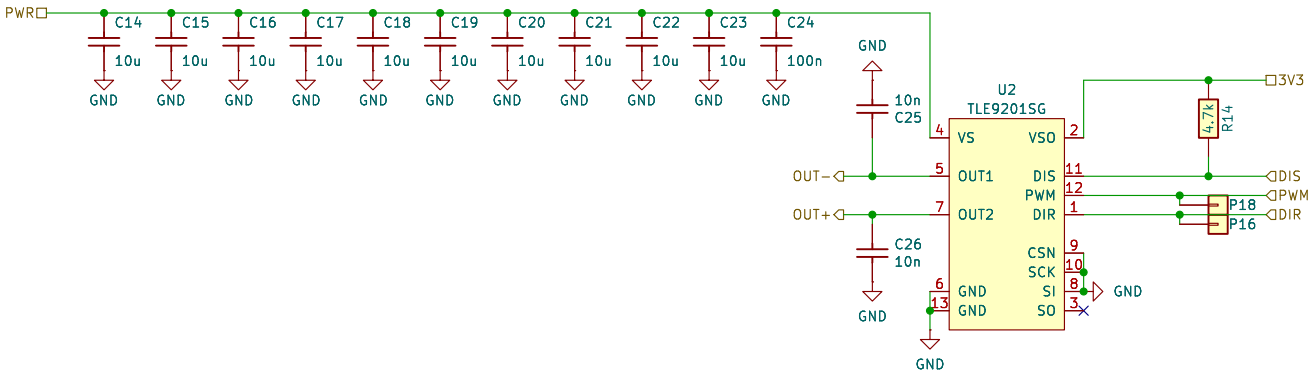

rusEFI.com

Sheet: /DC Driver 2/

File: DC_MOTOR_0.1.kicad_sch

Title: UAEFI

Size: A4	Date: 2025-04-30	Rev: E
KiCad E.D.A. 8.0.9		Id: 4/9

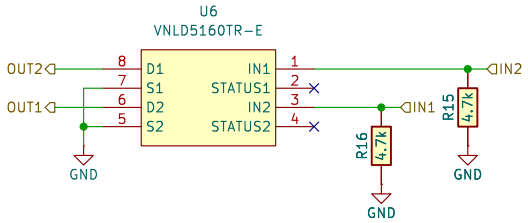

rusEFI.com

Sheet: /LS HOT/
File: LS_HOT.kicad_sch

Title: UAEFI

Size: A4	Date: 2025-04-30	**Rev: E**
KiCad E.D.A. 8.0.9		Id: 6/9

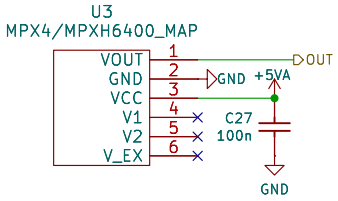

rusEFI.com

Sheet: /MAP/
File: MAP.kicad_sch

Title: UAEFI

Size: A4	Date: 2025-04-30	Rev: E
KiCad E.D.A. 8.0.9		Id: 8/9

Remove R20–R22, R26–R28, and install Q7–Q12 for use with dumb coils

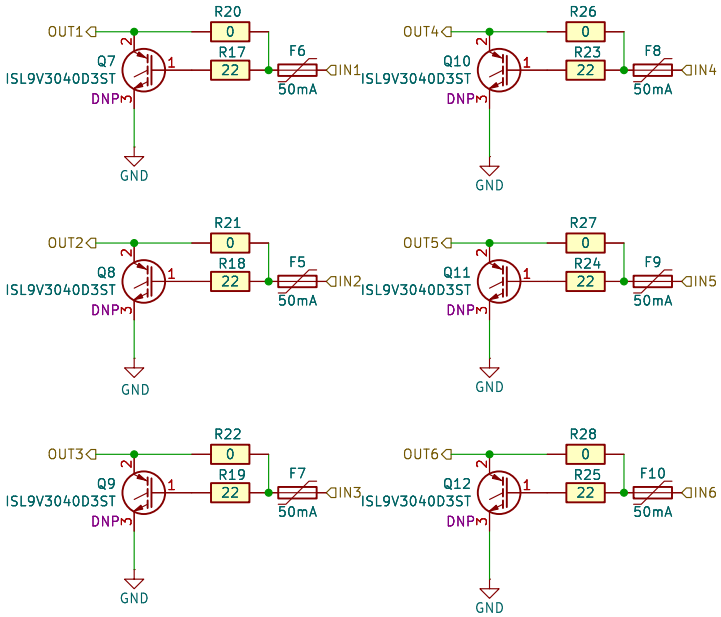

rusEFI.com

Sheet: /Ignition/
File: IGN6.kicad_sch

Title: UAEFI

Size: A4	Date: 2025-04-30	**Rev: E**
KiCad E.D.A. 8.0.9		Id: 9/9

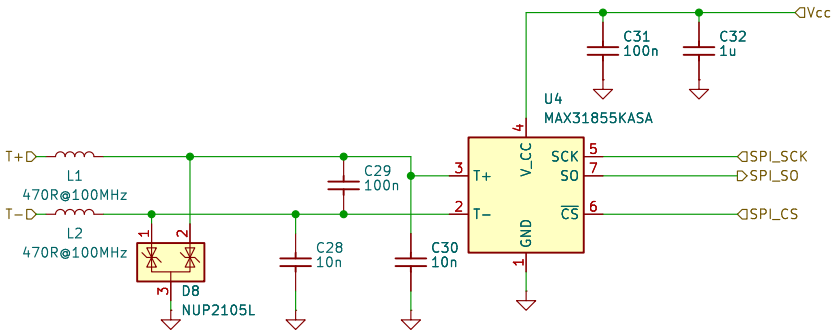

NUP2105L is optional, used for protection

rusEFI.com

Sheet: /EGT/
File: egt.kicad_sch

Title: UAEFI

Size: A4	Date: 2025-04-30	Rev: E
KiCad E.D.A. 8.0.9		Id: 9/9

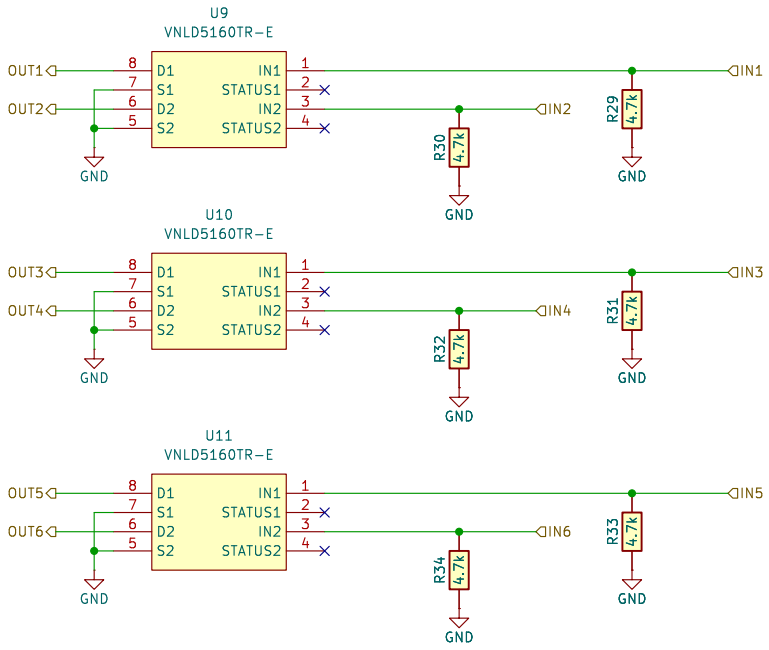

rusEFI.com

Sheet: /Injector/
File: INJ6.kicad_sch

Title: UAEFI

Size: A4	Date: 2025-04-30	Rev: E
KiCad E.D.A. 8.0.9		Id: 10/9