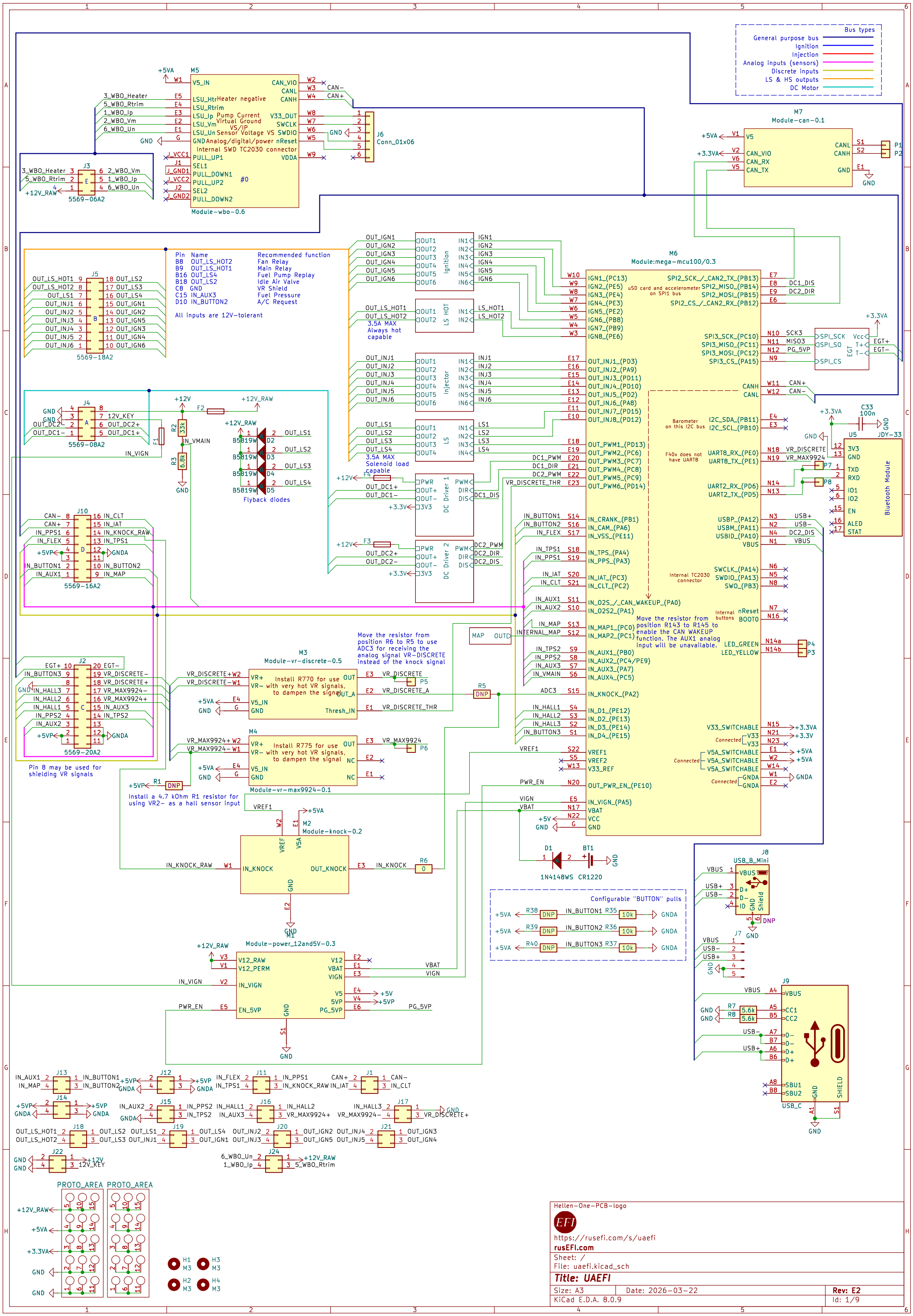
Bus types
General purpose bus
Ignition
Injection
Analog inputs (sensors)
Discrete inputs
LS & HS outputs
DC Motor
M5
Module-wbo-0.6
V5_IN
LSU_Htr Heater negative
LSU_Rtrim
LSU_Ip Pump Current
LSU_Vm Virtual Ground
VS/IP
LSU_Un Sensor Voltage VS
GND Analog/digital/power nReset
Internal SWD TC2030 connector
PULL_UP1
SEL1
PULL_DOWN1
PULL_UP2
SEL2
PULL_DOWN2
CAN_VIO
CANL
CANH
V33_OUT
SWCLK
SWDIO
VDDA
J6
Conn_01x06
M7
Module-can-0.1
CAN_VIO
CAN_RX
CAN_TX
J3
5569-06A2
J5
5569-18A2
Pin Name Recommended function
B8 OUT_LS_HOT2 Fan Relay
B9 OUT_LS_HOT1 Main Relay
B16 OUT_LS4 Fuel Pump Replay
B18 OUT_LS2 Idle Air Valve
C8 GND VR Shield
C15 IN_AUX3 Fuel Pressure
D10 IN_BUTTON2 A/C Request
All inputs are 12V-tolerant
Ignition
LS HOT
3.5A MAX
Always hot
capable
Injector
LS
3.5A MAX
Solenoid load
capable
DC Driver 1
DC Driver 2
M6
Module:mega-mcu100/0.3
uSD card and accelerometer on SPI1 bus
Barometer on this I2C bus
F40x does not have UART8
Internal TC2030 connector
Internal buttons
Move the resistor from position R143 to R145 to enable the CAN WAKEUP function. The AUX1 analog input will be unavailable.
J4
5569-08A2
Flyback diodes
J10
5569-16A2
J2
5569-20A2
Pin 8 may be used for shielding VR signals
M3
Module-vr-discrete-0.5
Install R770 for use with very hot VR signals, to dampen the signal
Move the resistor from position R6 to R5 to use ADC3 for receiving the analog signal VR-DISCRETE instead of the knock signal
M4
Module-vr-max9924-0.1
Install R775 for use with very hot VR signals, to dampen the signal
Install a 4.7 kOhm R1 resistor for using VR2- as a hall sensor input
M2
Module-knock-0.2
M1
Module-power_12and5V-0.3
U5
JDY-33
Bluetooth Module
C33
100n
D1
1N4148WS
BT1
CR1220
Configurable "BUTTON" pulls
J8
USB_B_Mini
J7
J9
USB_C
J13
J12
J11
J1
J14
J15
J16
J17
J18
J19
J20
J21
J22
J24
PROTO_AREA
H1 M3
H2 M3
H3 M3
H4 M3
Hellen-One-PCB-logo
https://rusefi.com/s/uaefi
rusEFI.com
Sheet: /
File: uaefi.kicad_sch
Title: UAEFI
Size: A3
Date: 2026-03-22
Rev: E2
KiCad E.D.A. 8.0.9
Id: 1/9

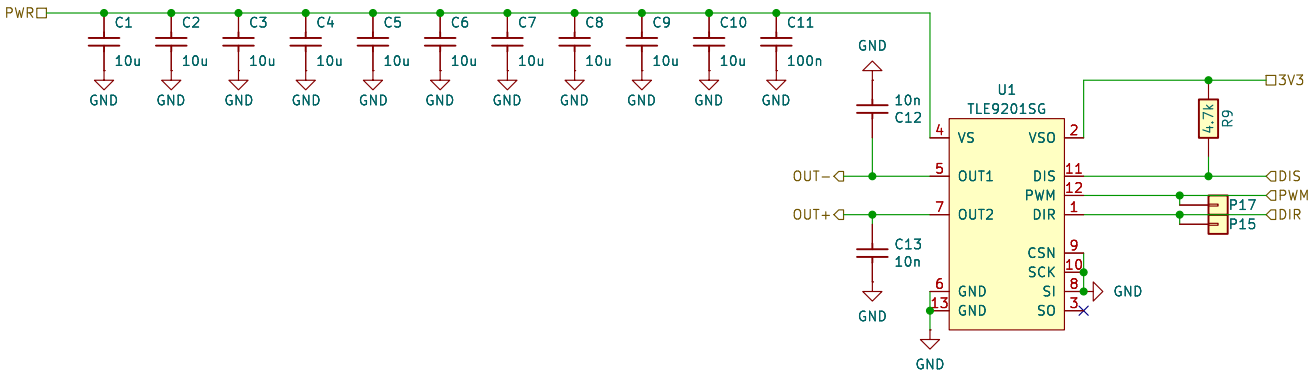

rusEFI.com

Sheet: /DC Driver 1/

File: DC_MOTOR_0.1.kicad_sch

Title: UAEFI

Size: A4	Date: 2025-04-30	Rev: E
KiCad E.D.A. 8.0.9		Id: 2/9

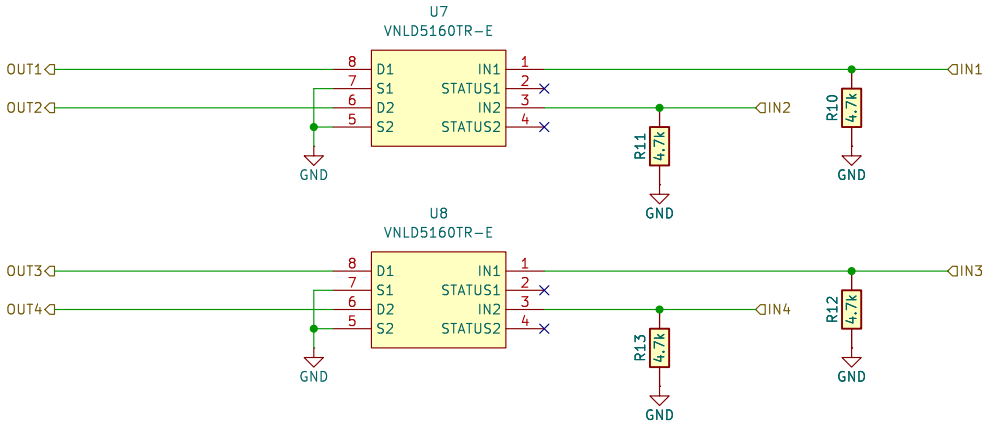

rusEFI.com

Sheet: /LS/

File: LS4.kicad_sch

Title: UAEFI

Size: A4	Date: 2025-04-30	Rev: E
KiCad E.D.A. 8.0.9		Id: 3/9

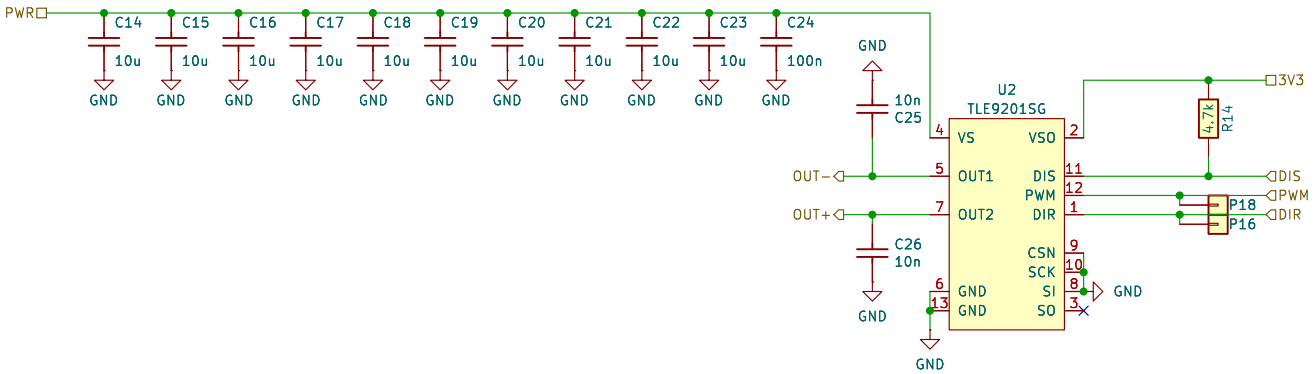

rusEFI.com

Sheet: /DC Driver 2/

File: DC_MOTOR_0.1.kicad_sch

Title: UAEFI

Size: A4	Date: 2025-04-30	Rev: E
KiCad E.D.A. 8.0.9		Id: 4/9

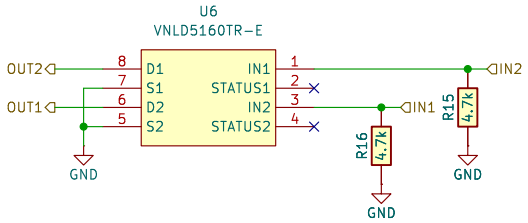

rusEFI.com

Sheet: /LS HOT/
File: LS_HOT.kicad_sch

Title: UAEFI

Size: A4	Date: 2025-04-30	**Rev: E**
KiCad E.D.A. 8.0.9		Id: 6/9

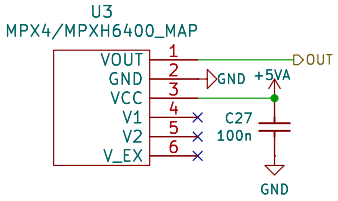

rusEFI.com

Sheet: /MAP/
File: MAP.kicad_sch

Title: UAEFI

Size: A4	Date: 2025-04-30	Rev: E
KiCad E.D.A. 8.0.9		Id: 8/9

Remove R20–R22, R26–R28, and install Q7–Q12 for use with dumb coils

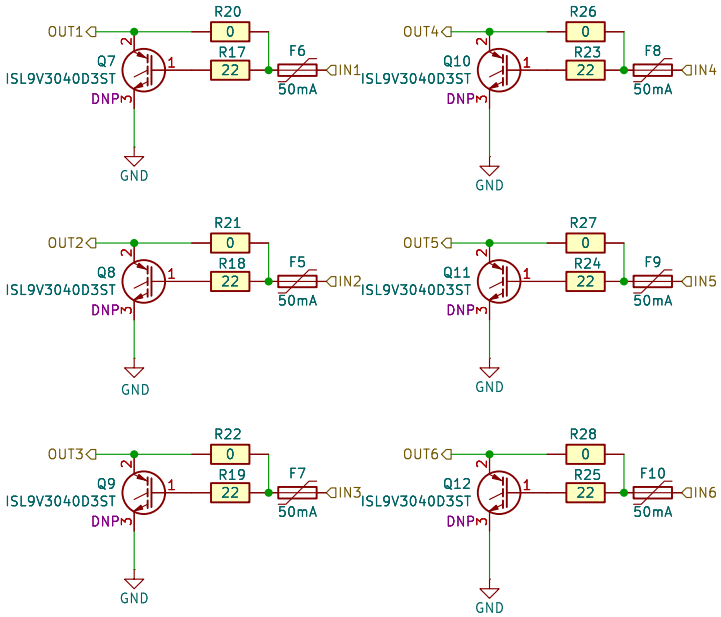

rusEFI.com

Sheet: /Ignition/
File: IGN6.kicad_sch

Title: UAEFI

Size: A4	Date: 2025-04-30	**Rev: E**
KiCad E.D.A. 8.0.9		Id: 9/9

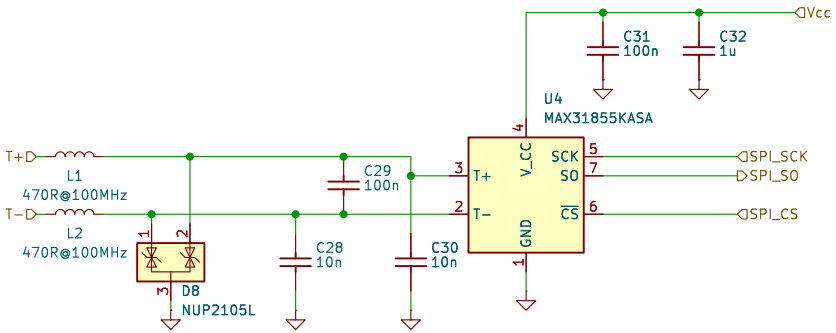

NUP2105L is optional, used for protection

rusEFI.com

Sheet: /EGT/
File: egt.kicad_sch

Title: UAEFI

Size: A4	Date: 2025-04-30	Rev: E
KiCad E.D.A. 8.0.9		Id: 9/9

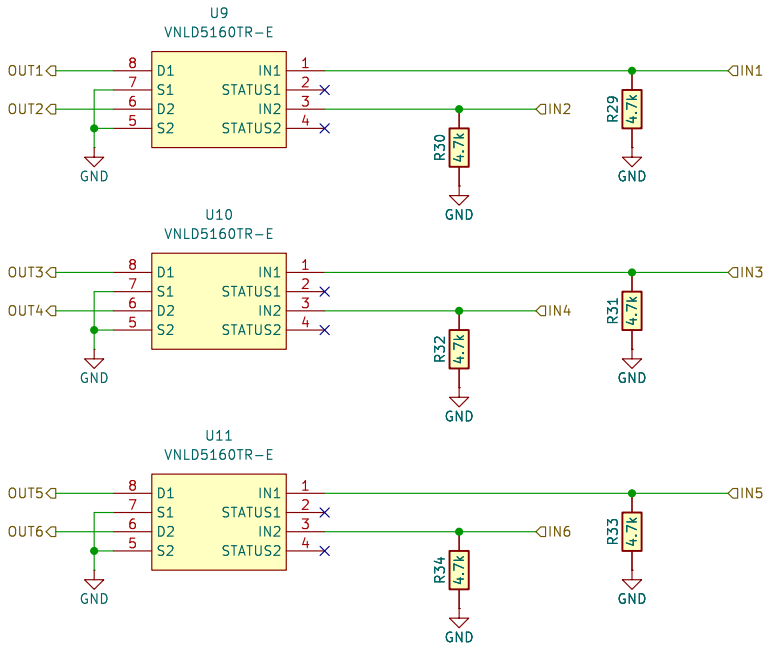

rusEFI.com

Sheet: /Injector/
File: INJ6.kicad_sch

Title: UAEFI

Size: A4	Date: 2025-04-30	Rev: E
KiCad E.D.A. 8.0.9		Id: 10/9

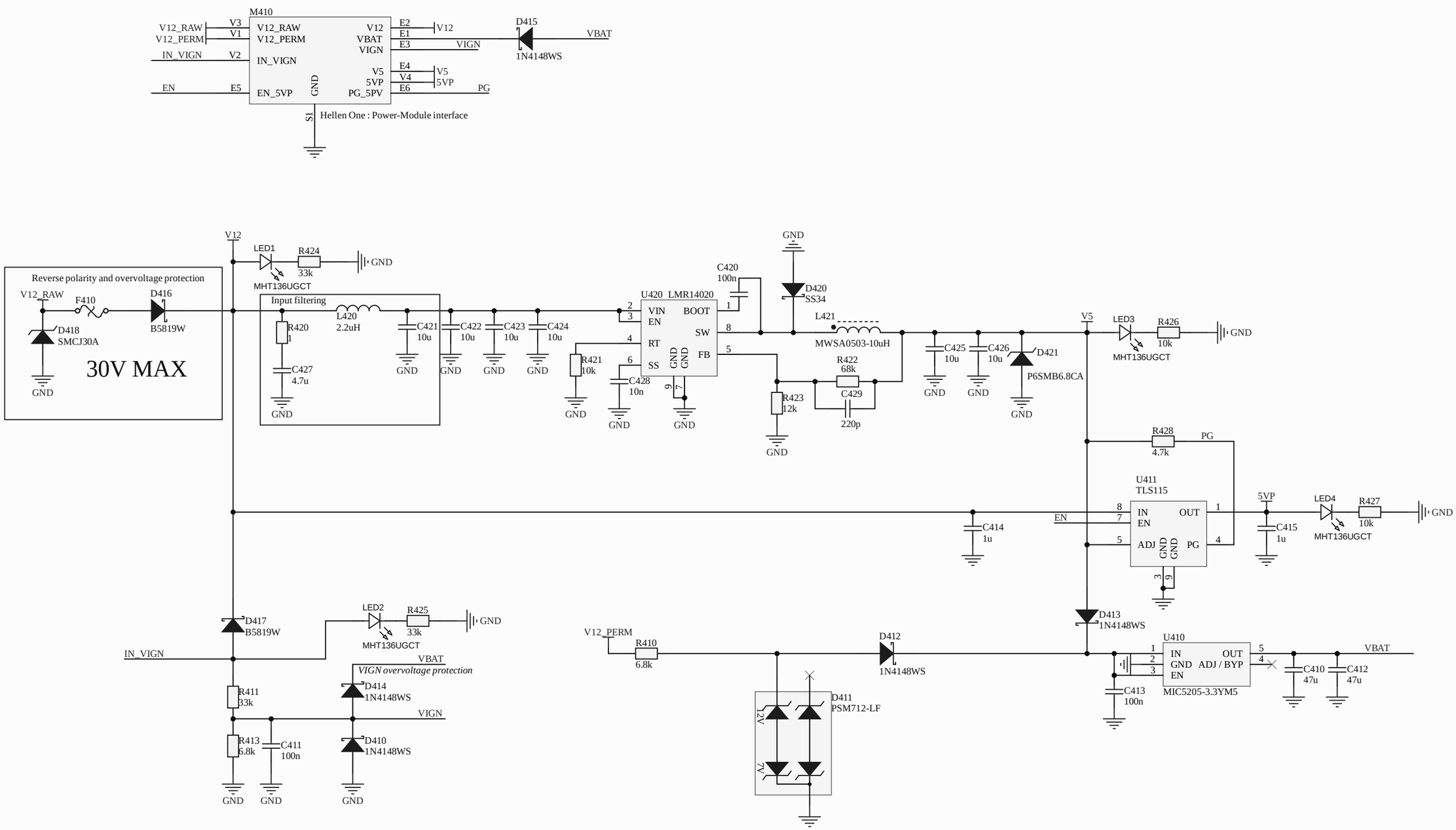

power_12and5V-0.3

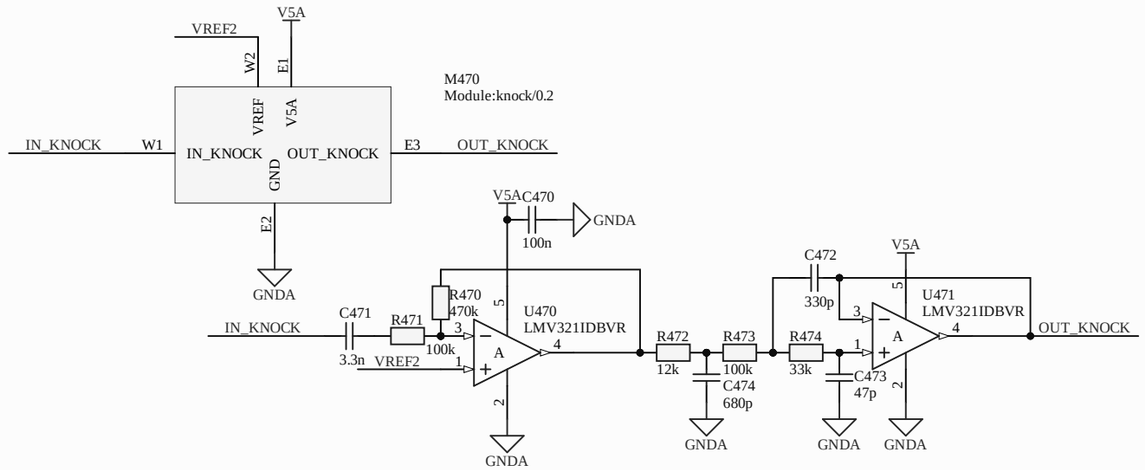

Title: ***Hellen-One Knock***			***rusEFI EMS*** ***Hellen-One Platform*** *https://rusefi.com/s/hellen72*
Size: A3	Author: andreika	Revision: 0.2	
Date: 15.02.2023		Sheet 1 of 1	

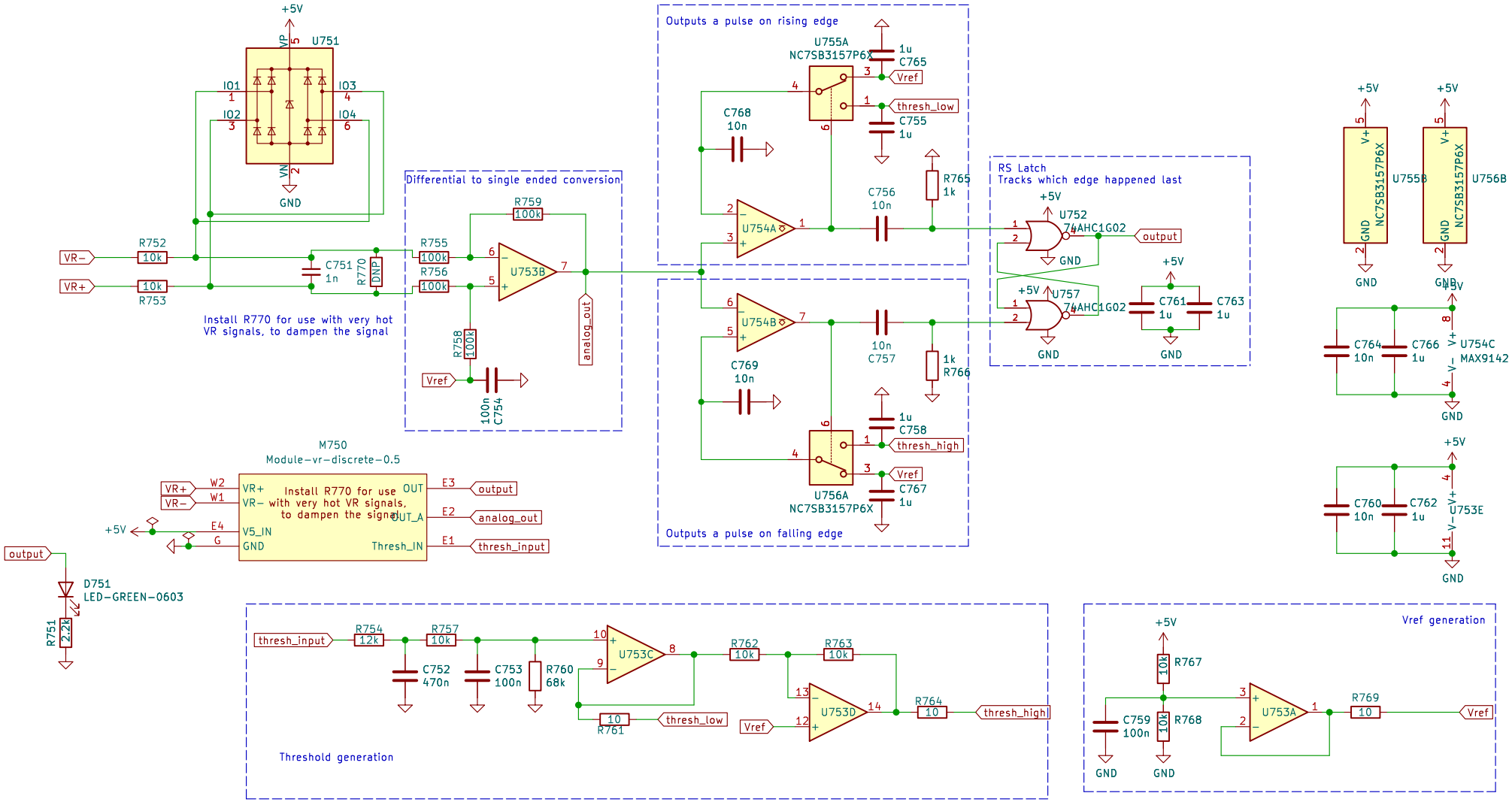

Sheet: /
File: hellen1−vr−discrete.kicad_sch

Title:

Size: A4	Date:	Rev:
KiCad E.D.A. kicad 7.0.9		Id: 1/1

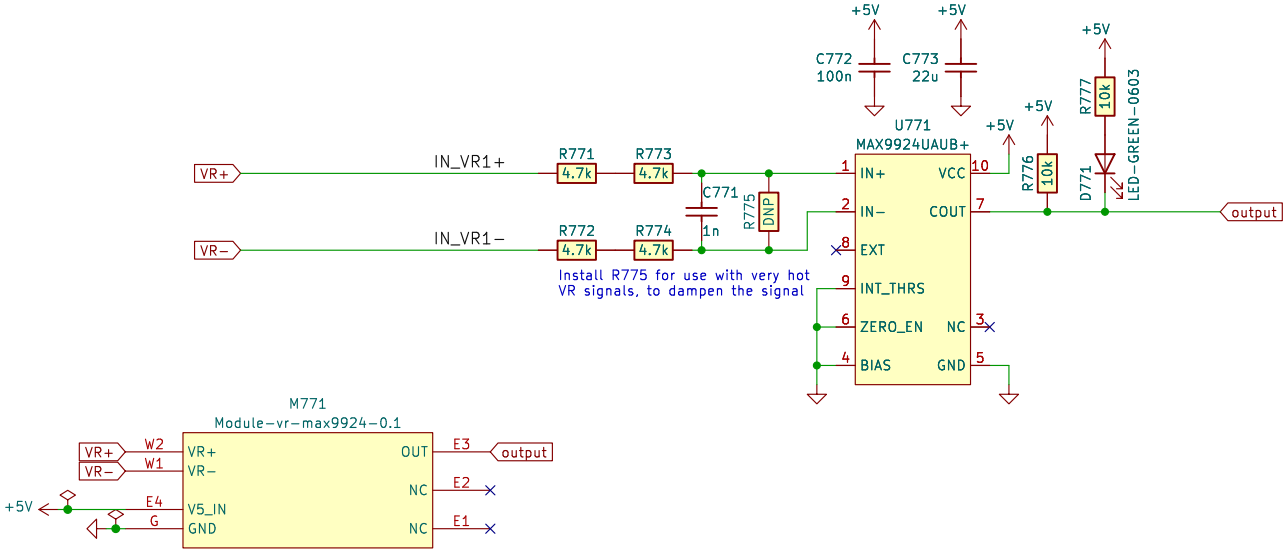

Sheet: /
File: hellen1−vr−max9924.kicad_sch

Title: VR MAX9924 module

Size: A4	Date: 2023−07−25	Rev: 0.1
KiCad E.D.A. eeschema 7.0.9		Id: 1/1

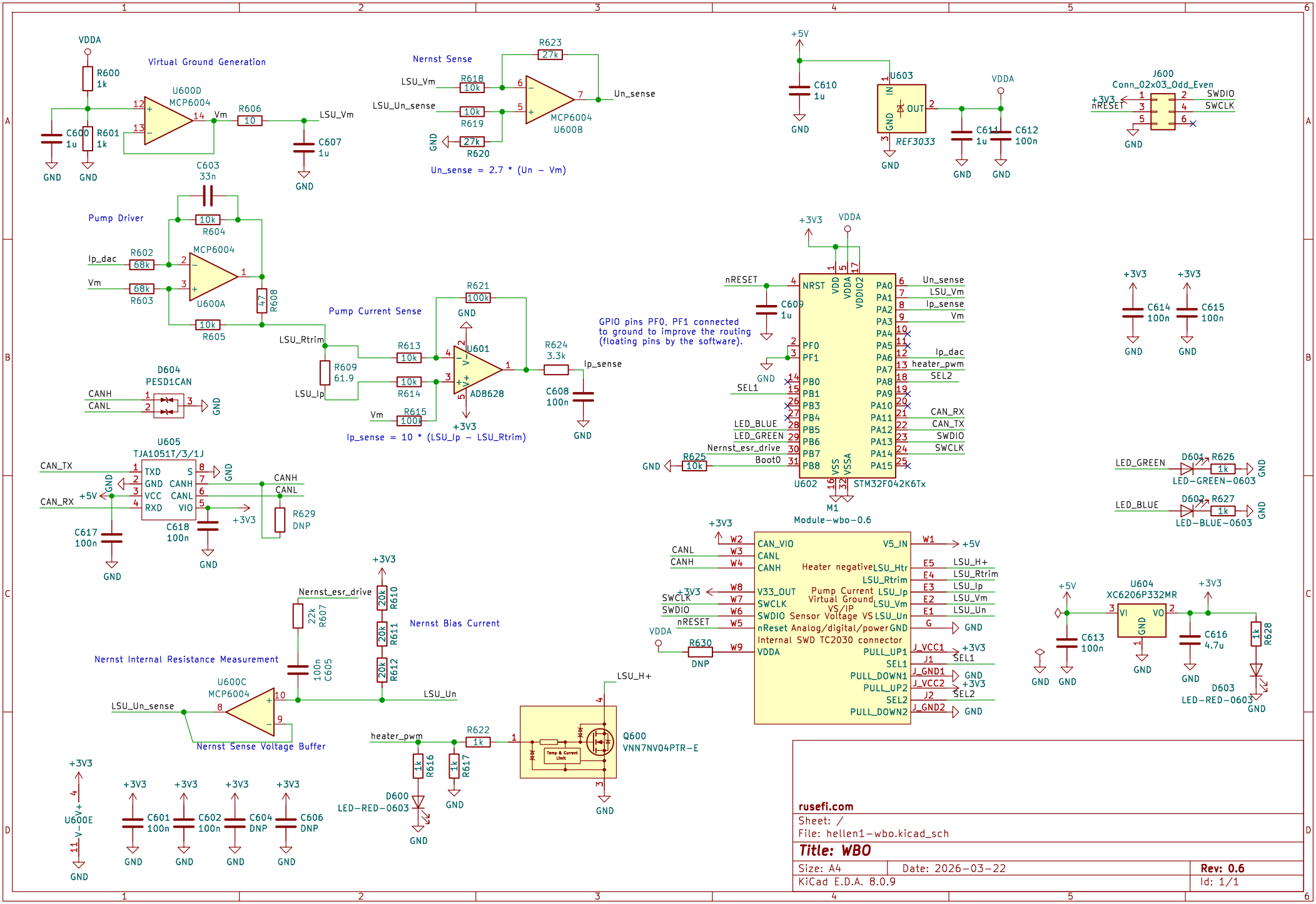

rusefi.com

Sheet: /

File: hellen1-wbo.kicad_sch

Title: WBO

Size: A4	Date: 2026-03-22	Rev: 0.6
KiCad E.D.A. 8.0.9		Id: 1/1

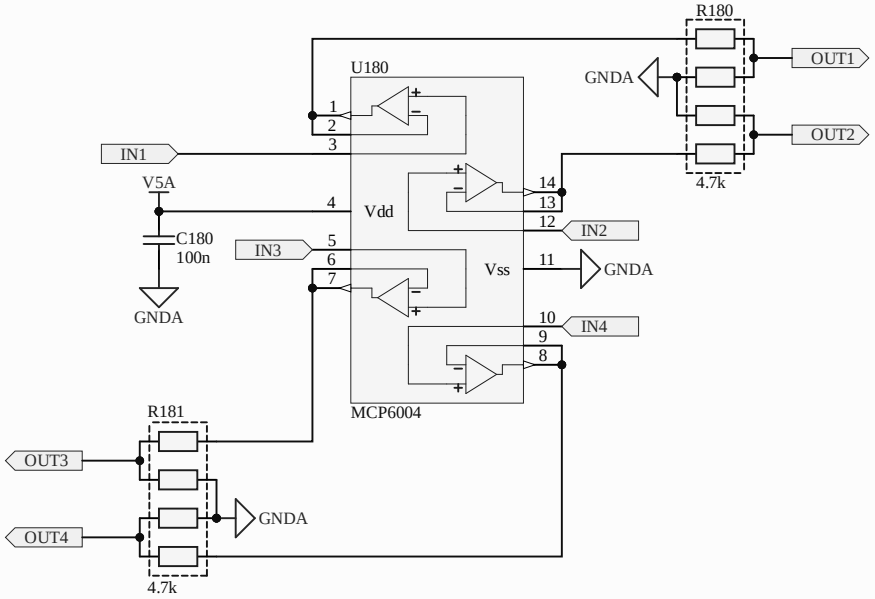
R180
U180
GNDA
OUT1
OUT2
IN1
V5A
4.7k
Vdd
C180
100n
IN3
IN2
Vss
GNDA
GNDA
IN4
MCP6004
R181
OUT3
GNDA
OUT4
4.7k

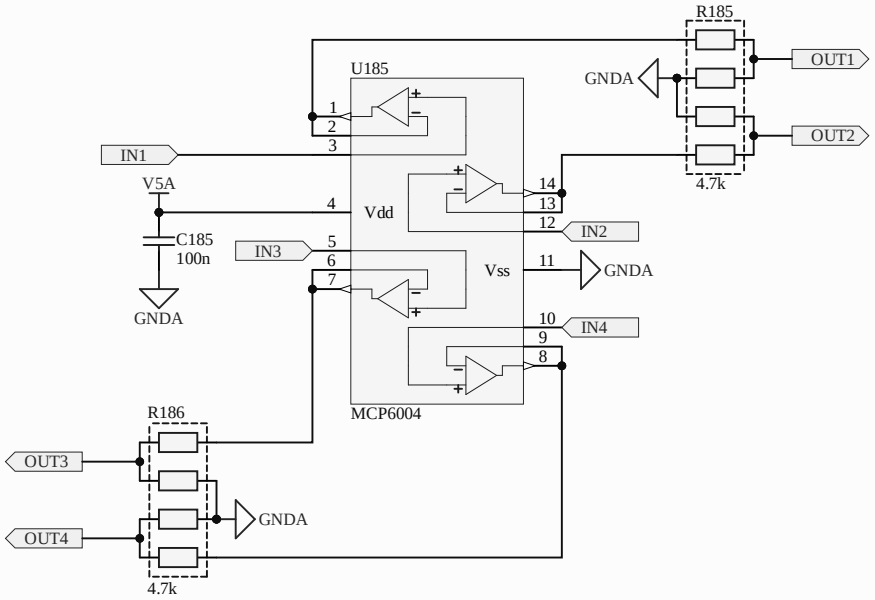
R185
U185
GNDA
OUT1
OUT2
IN1
V5A
4.7k
Vdd
C185
100n
IN3
IN2
Vss
GNDA
GNDA
IN4
MCP6004
R186
OUT3
GNDA
OUT4
4.7k

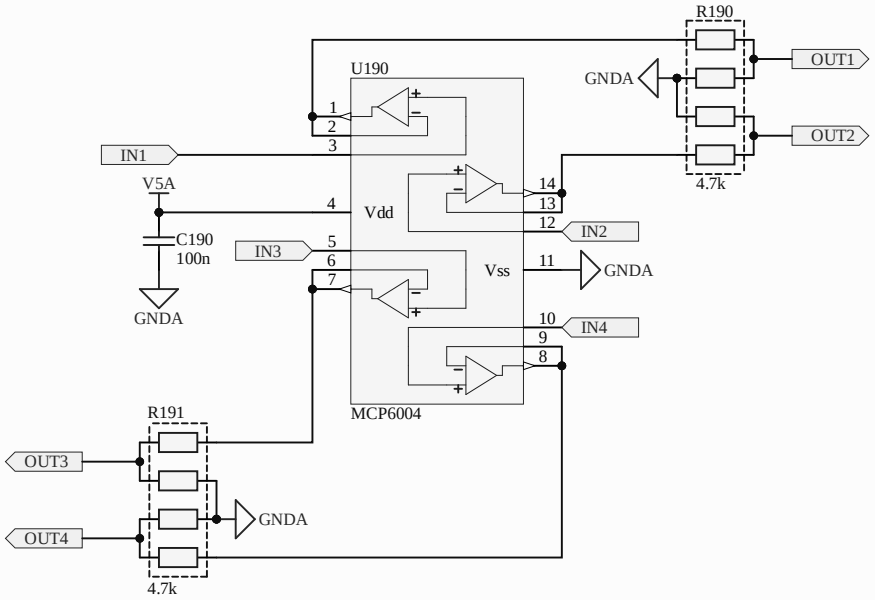
R190
U190
GNDA
OUT1
OUT2
IN1
V5A
C190
100n
GNDA
IN3
Vdd
Vss
IN2
GNDA
IN4
MCP6004
4.7k
R191
OUT3
OUT4
GNDA
4.7k

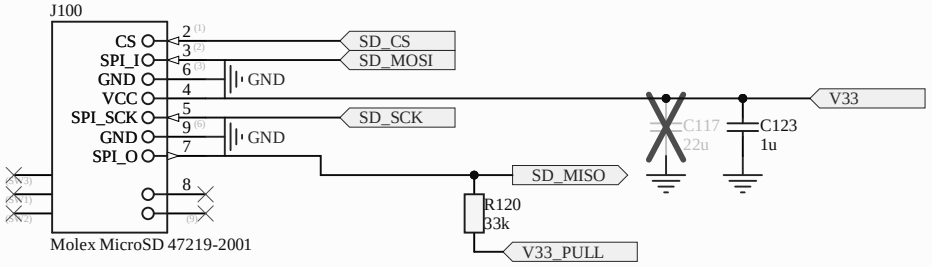
J100
CS
SPI_I
GND
VCC
SPI_SCK
GND
SPI_O
2
3
6
4
5
9
7
8
GND
GND
SD_CS
SD_MOSI
SD_SCK
SD_MISO
V33
C117
22u
C123
1u
R120
33k
V33_PULL
Molex MicroSD 47219-2001

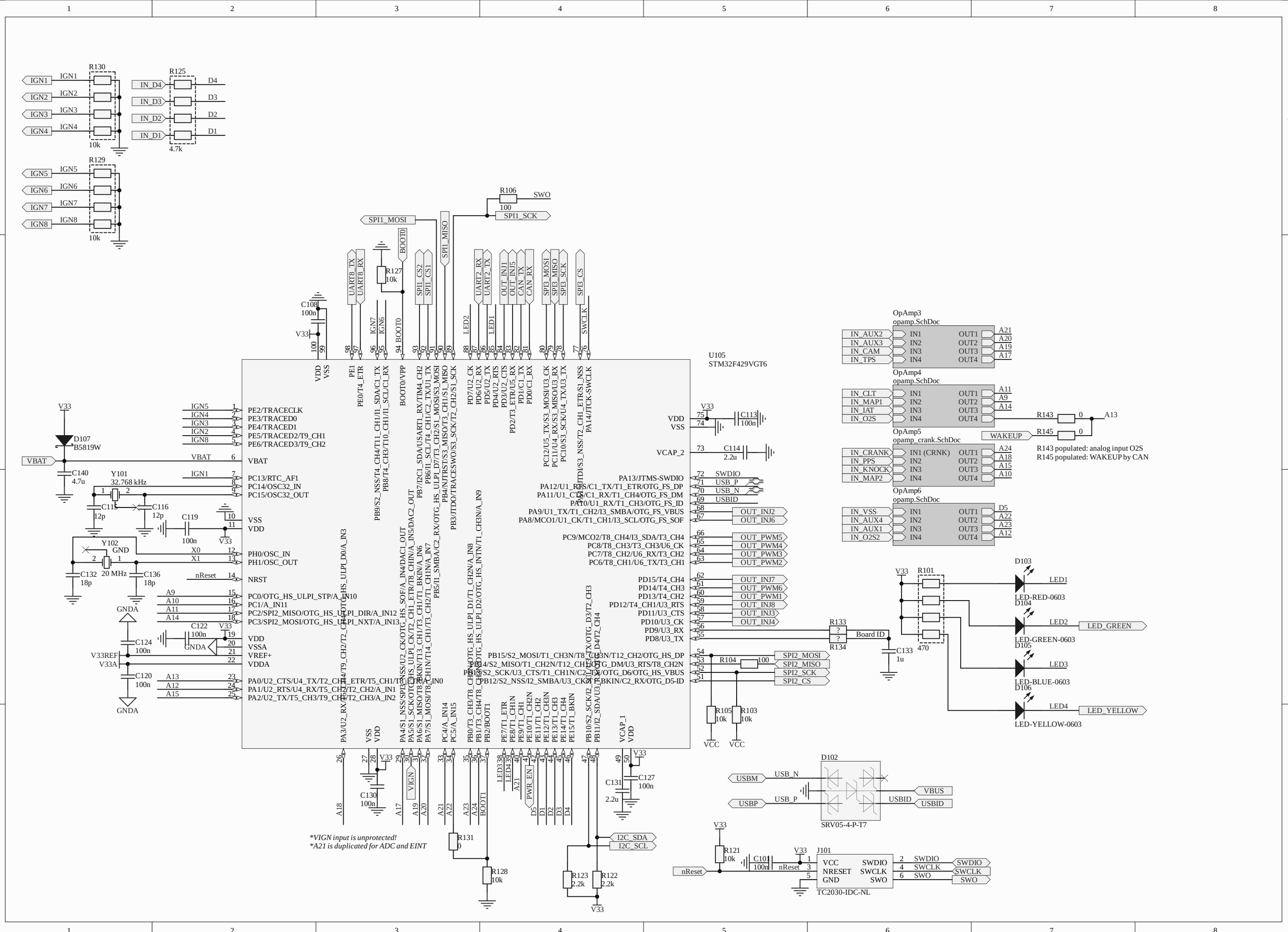
U105
STM32F429VGT6
R130
R125
R129
IGN1
IGN2
IGN3
IGN4
IGN5
IGN6
IGN7
IGN8
IN_D4
IN_D3
IN_D2
IN_D1
D4
D3
D2
D1
10k
4.7k
R106
SWO
100
SPI1_SCK
SPI1_MOSI
SPI1_MISO
BOOT0
R127
10k
C108
100n
V33
UART8_TX
UART8_RX
SPI1_CS2
SPI1_CS1
UART2_RX
UART2_TX
OUT_INJ1
OUT_INJ5
CAN_TX
CAN_RX
SPI3_MOSI
SPI3_MISO
SPI3_SCK
SPI3_CS
SWCLK
LED2
LED1
VDD
VSS
PE1
PE0/T4_ETR
BOOT0/VPP
PD7/U2_CK
PD6/U2_RX
PD5/U2_TX
PD4/U2_RTS
PD3/U2_CTS
PD2/T3_ETR/U5_RX
PD1/C1_TX
PD0/C1_RX
PA14/JTCK-SWCLK
PC12/U5_TX/S3_MOSI/U3_CK
PC11/U4_RX/S3_MISO/U3_RX
PC10/S3_SCK/U4_TX/U3_TX
PA13/JTMS-SWDIO
PA12/U1_RTS/C1_TX/T1_ETR/OTG_FS_DP
PA11/U1_CTS/C1_RX/T1_CH4/OTG_FS_DM
PA10/U1_RX/T1_CH3/OTG_FS_ID
PA9/U1_TX/T1_CH2/I3_SMBA/OTG_FS_VBUS
PA8/MCO1/U1_CK/T1_CH1/I3_SCL/OTG_FS_SOF
PC9/MCO2/T8_CH4/I3_SDA/T3_CH4
PC8/T8_CH3/T3_CH3/U6_CK
PC7/T8_CH2/U6_RX/T3_CH2
PC6/T8_CH1/U6_TX/T3_CH1
PD15/T4_CH4
PD14/T4_CH3
PD13/T4_CH2
PD12/T4_CH1/U3_RTS
PD11/U3_CTS
PD10/U3_CK
PD9/U3_RX
PD8/U3_TX
PB15/S2_MOSI/T1_CH3N/T8_CH3N/T12_CH2/OTG_HS_DP
PB14/S2_MISO/T1_CH2N/T12_CH1/OTG_DM/U3_RTS/T8_CH2N
PB13/S2_SCK/U3_CTS/T1_CH1N/C2_TX/OTG_D6/OTG_HS_VBUS
PB12/S2_NSS/I2_SMBA/U3_CK/T1_BKIN/C2_RX/OTG_D5-ID
PE2/TRACECLK
PE3/TRACED0
PE4/TRACED1
PE5/TRACED2/T9_CH1
PE6/TRACED3/T9_CH2
VBAT
PC13/RTC_AF1
PC14/OSC32_IN
PC15/OSC32_OUT
PH0/OSC_IN
PH1/OSC_OUT
NRST
PC0/OTG_HS_ULPI_STP/A_IN10
PC1/A_IN11
PC2/SPI2_MISO/OTG_HS_ULPI_DIR/A_IN12
PC3/SPI2_MOSI/OTG_HS_ULPI_NXT/A_IN13
VSSA
VREF+
VDDA
PA0/U2_CTS/U4_TX/T2_CH1_ETR/T5_CH1/T8_ETR/A_IN0
PA1/U2_RTS/U4_RX/T5_CH2/T2_CH2/A_IN1
PA2/U2_TX/T5_CH3/T9_CH1/T2_CH3/A_IN2
VCAP_2
VCAP_1
D107
B5819W
C140
4.7u
Y101
32.768 kHz
C115
12p
C116
12p
C119
100n
Y102
20 MHz
C132
18p
C136
18p
C122
100n
C124
100n
C120
100n
GNDA
V33REF
V33A
C130
100n
C113
100n
C114
2.2u
C131
2.2u
C127
100n
R131
0
R128
10k
R123
2.2k
R122
2.2k
I2C_SDA
I2C_SCL
VIGN
PWR_EN
*VIGN input is unprotected!
*A21 is duplicated for ADC and EINT
OpAmp3
opamp.SchDoc
OpAmp4
opamp.SchDoc
OpAmp5
opamp_crank.SchDoc
OpAmp6
opamp.SchDoc
IN_AUX2
IN_AUX3
IN_CAM
IN_TPS
IN_CLT
IN_MAP1
IN_IAT
IN_O2S
IN_CRANK
IN_PPS
IN_KNOCK
IN_MAP2
IN_VSS
IN_AUX4
IN_AUX1
IN_O2S2
IN1
IN2
IN3
IN4
IN1 (CRNK)
OUT1
OUT2
OUT3
OUT4
A21
A20
A19
A17
A11
A9
A14
A24
A18
A15
A10
D5
A22
A23
A12
R143
R145
WAKEUP
A13
R143 populated: analog input O2S
R145 populated: WAKEUP by CAN
OUT_INJ2
OUT_INJ6
OUT_PWM5
OUT_PWM4
OUT_PWM3
OUT_PWM2
OUT_INJ7
OUT_PWM6
OUT_PWM1
OUT_INJ8
OUT_INJ3
OUT_INJ4
R133
R134
Board ID
C133
1u
R104
100
SPI2_MOSI
SPI2_MISO
SPI2_SCK
SPI2_CS
R105
10k
R103
10k
VCC
R101
470
D103
D104
D105
D106
LED1
LED2
LED3
LED4
LED_GREEN
LED_YELLOW
LED-RED-0603
LED-GREEN-0603
LED-BLUE-0603
LED-YELLOW-0603
D102
USBM
USBP
USB_N
USB_P
VBUS
USBID
SRV05-4-P-T7
R121
10k
C101
100n
nReset
J101
VCC
NRESET
GND
SWDIO
SWCLK
SWO
TC2030-IDC-NL

See pullups replacement file for actual values

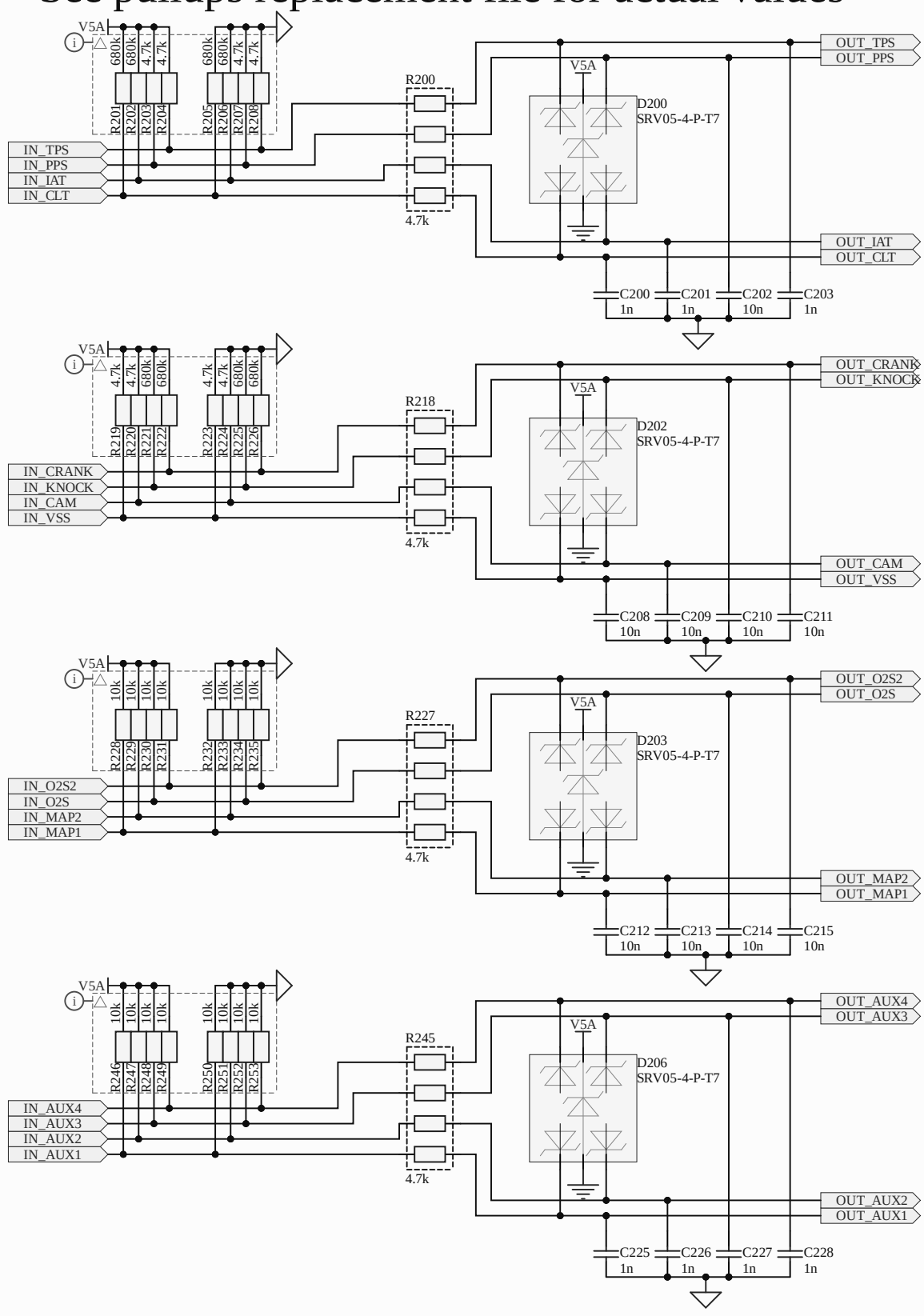

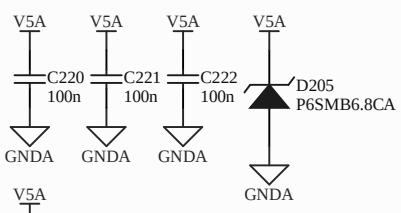

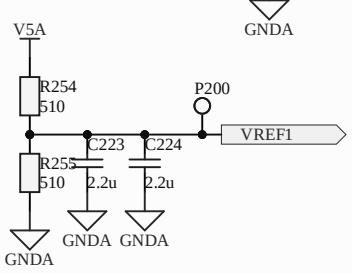

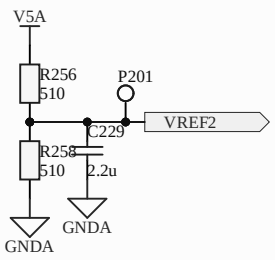

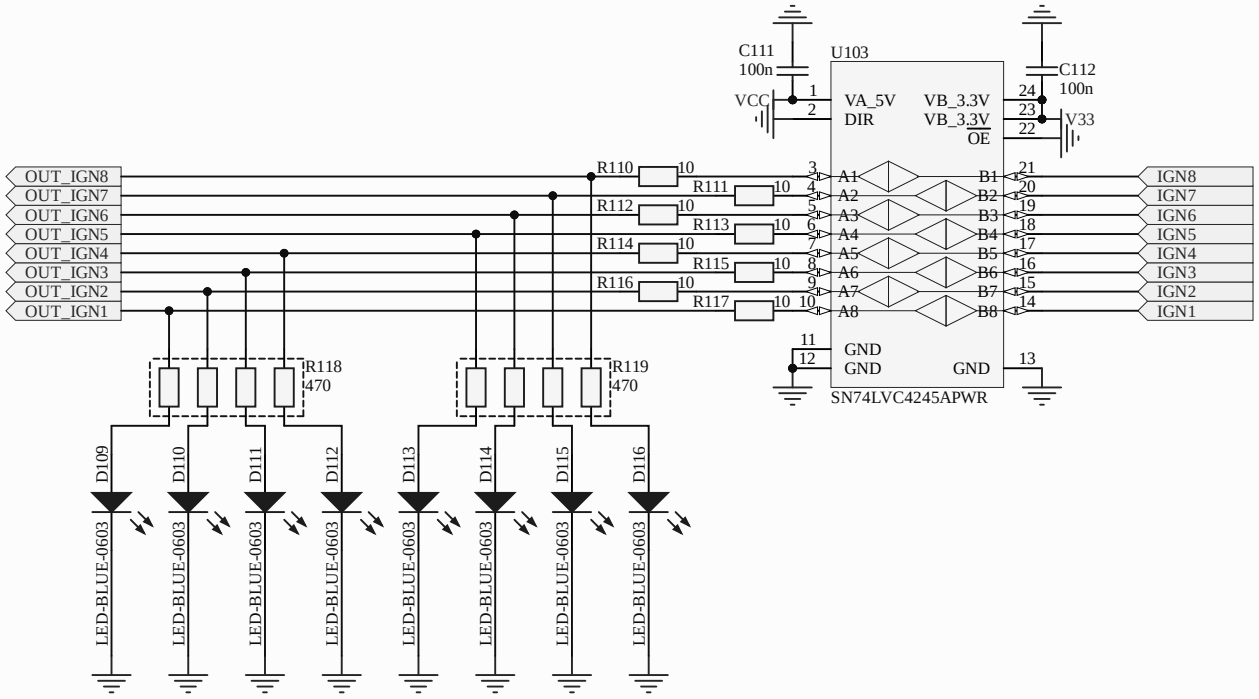
U103
C111
100n
C112
100n
VCC
V33
VA_5V
DIR
VB_3.3V
VB_3.3V
OE
GND
GND
GND
SN74LVC4245APWR
OUT_IGN8
OUT_IGN7
OUT_IGN6
OUT_IGN5
OUT_IGN4
OUT_IGN3
OUT_IGN2
OUT_IGN1
IGN8
IGN7
IGN6
IGN5
IGN4
IGN3
IGN2
IGN1
R110
R111
R112
R113
R114
R115
R116
R117
R118
470
R119
470
D109
D110
D111
D112
D113
D114
D115
D116
LED-BLUE-0603

See pullups replacement file for actual values

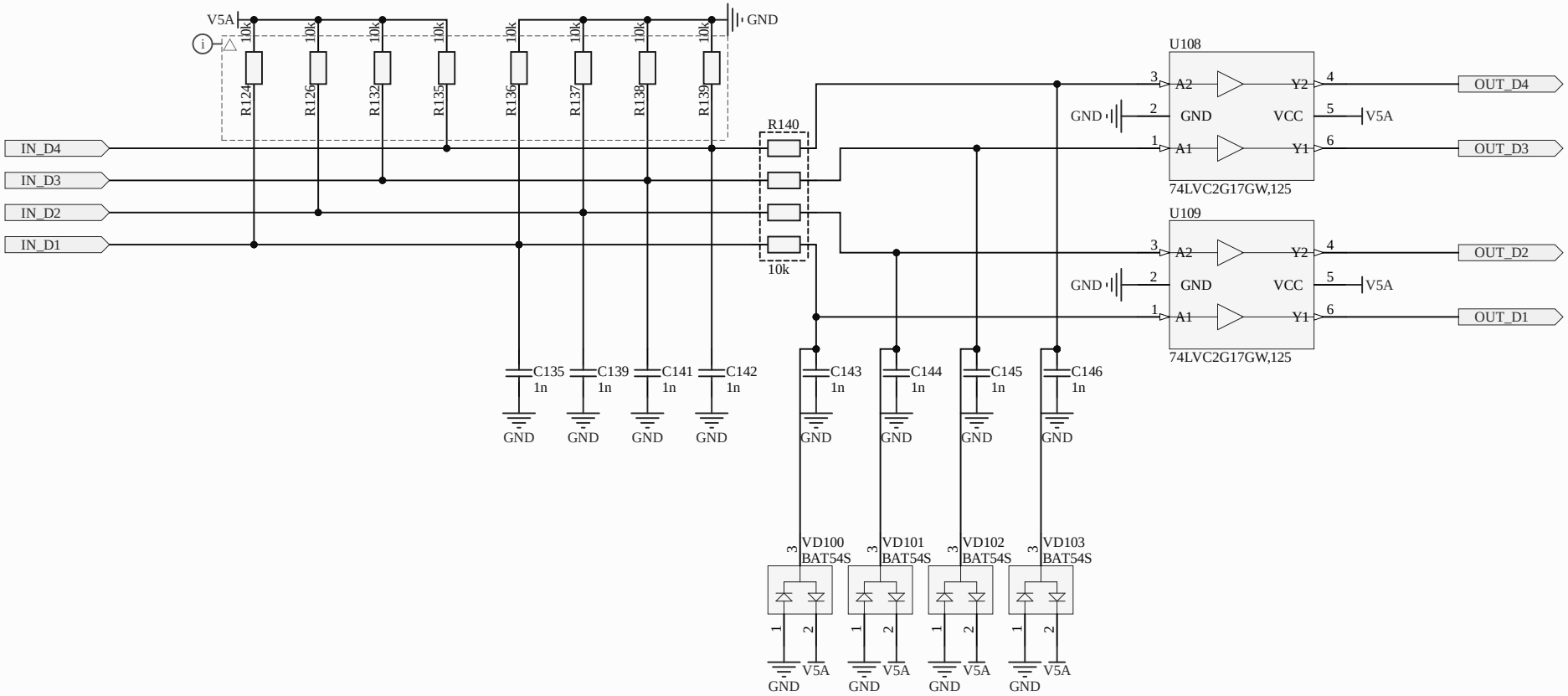

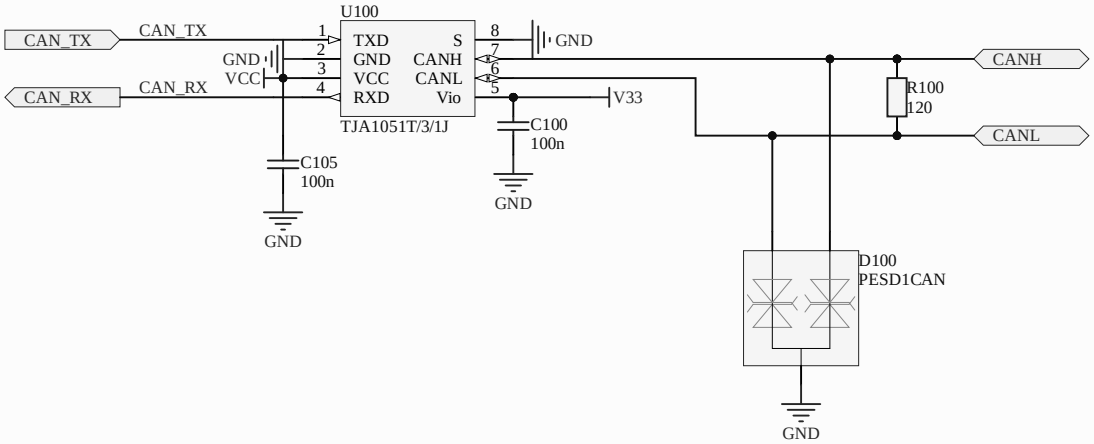
U100
CAN_TX
CAN_TX
CAN_RX
CAN_RX
GND
VCC
1
2
3
4
TXD
GND
VCC
RXD
S
CANH
CANL
Vio
8
7
6
5
GND
V33
TJA1051T/3/1J
C100
100n
GND
C105
100n
GND
CANH
CANL
R100
120
D100
PESD1CAN
GND

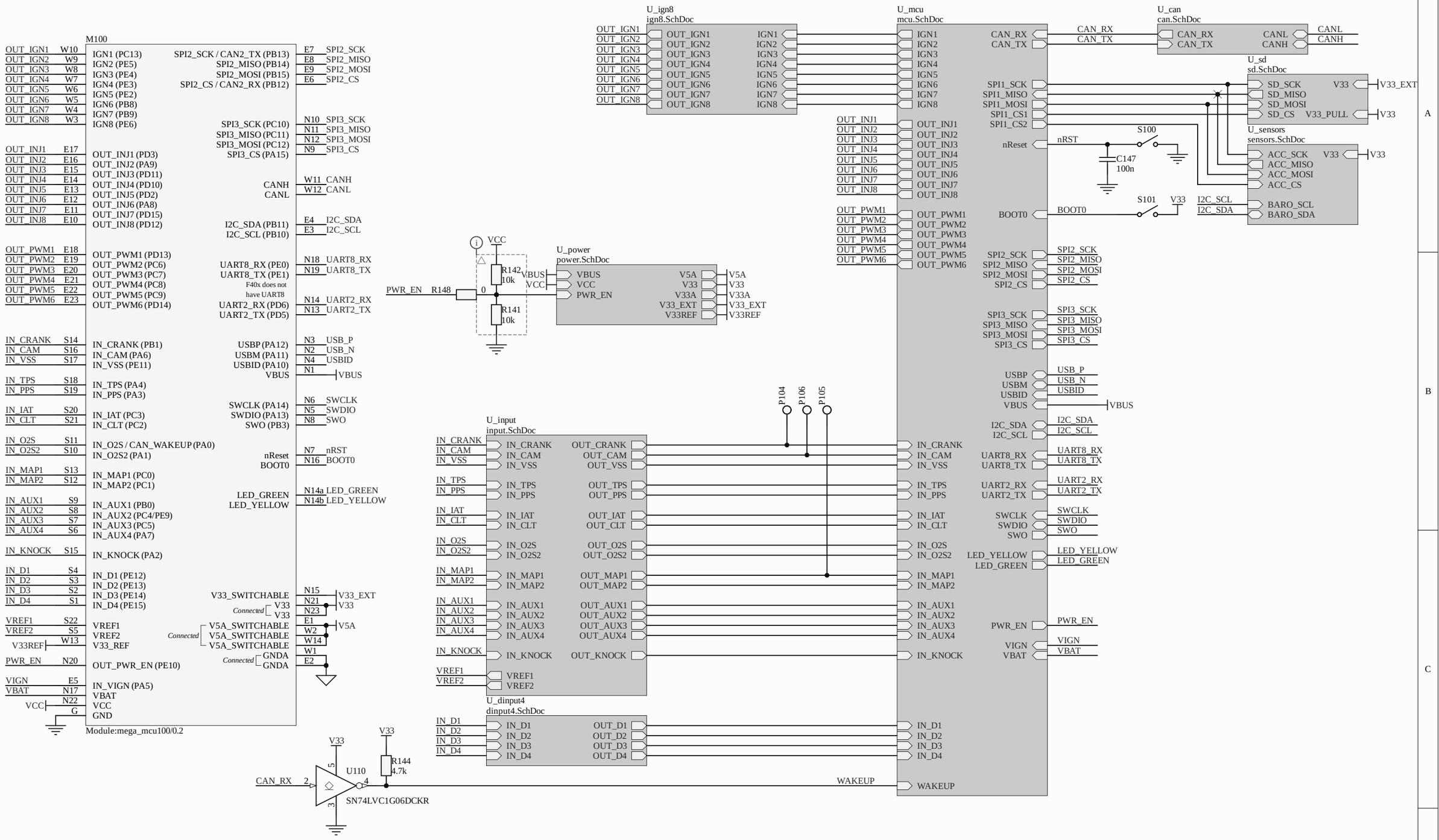
M100
Module:mega_mcu100/0.2
U_ign8
ign8.SchDoc
U_mcu
mcu.SchDoc
U_can
can.SchDoc
U_sd
sd.SchDoc
U_sensors
sensors.SchDoc
U_power
power.SchDoc
U_input
input.SchDoc
U_dinput4
dinput4.SchDoc
F40x does not have UART8
S100
S101
C147 100n
R142 10k
R141 10k
R148
R144 4.7k
U110
SN74LVC1G06DCKR
CAN_RX
WAKEUP
P104
P106
P105

More accurate threshold for "raw" connection of VR sensors

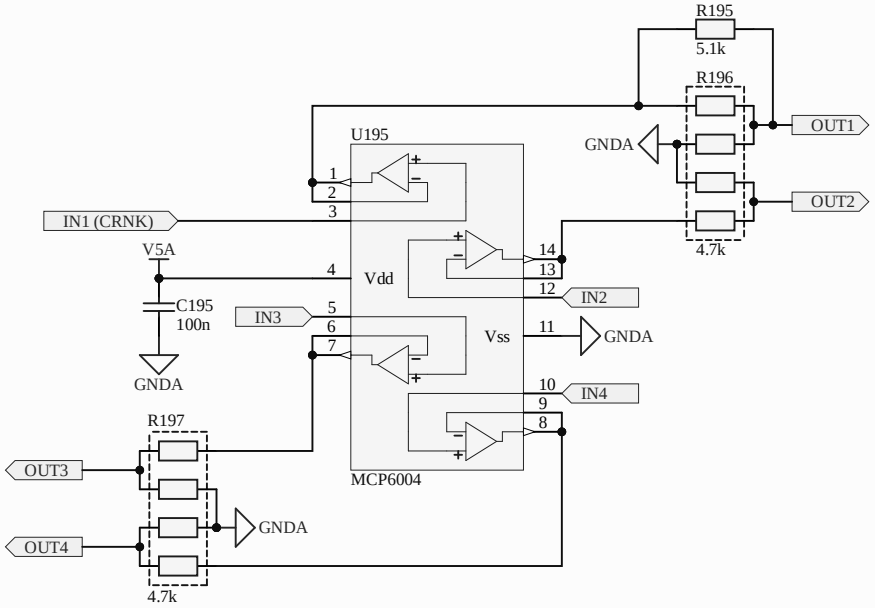

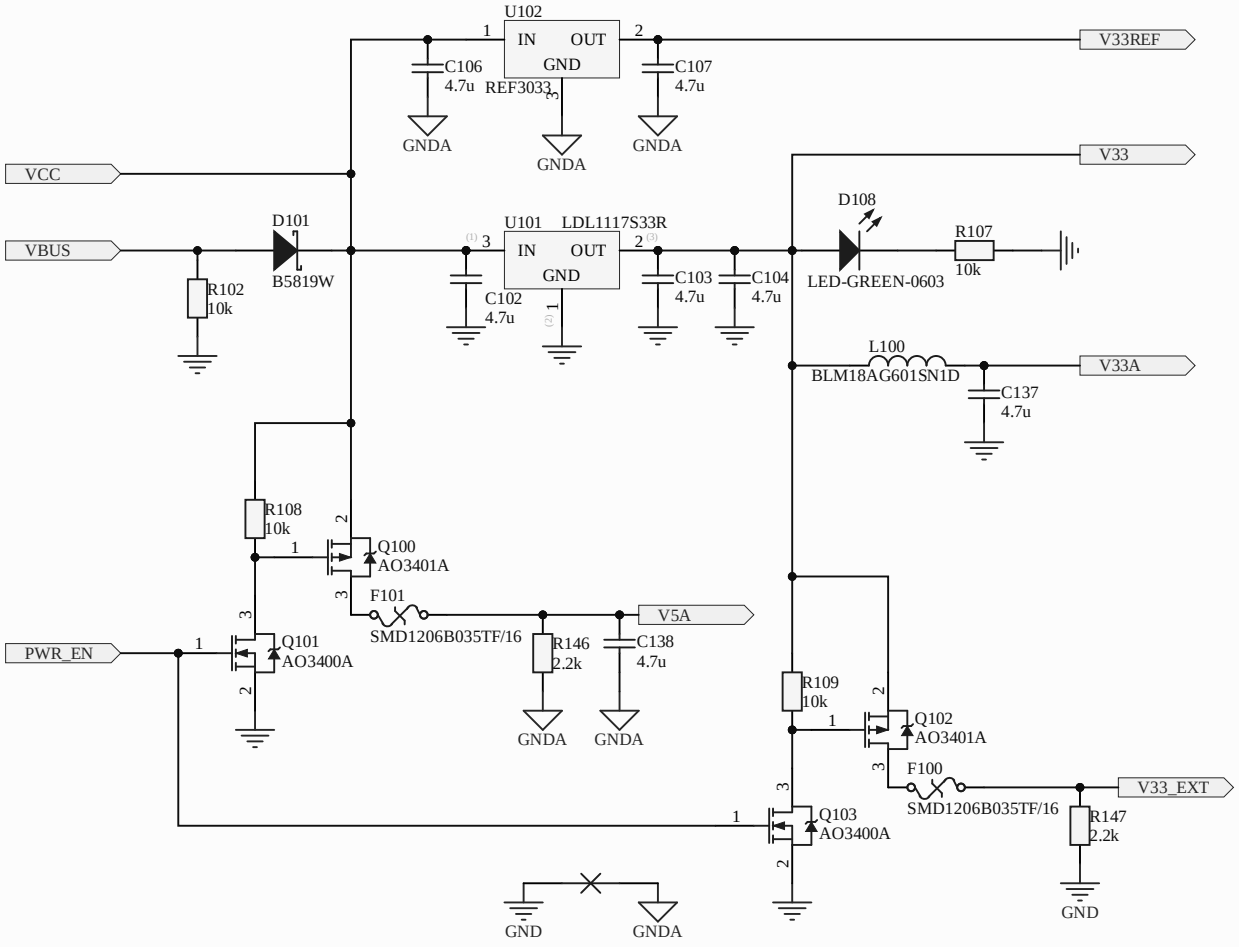

Title		
Size A4	Number	Revision
Date: 5.03.2025	Sheet of	
File: C:\Work\..\power.SchDoc	Drawn By:	

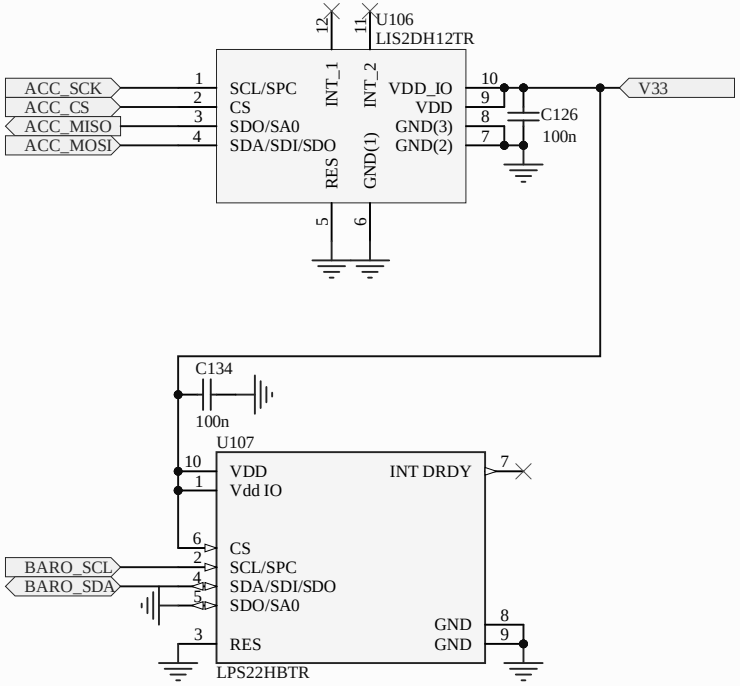
U106
LIS2DH12TR
ACC_SCK
ACC_CS
ACC_MISO
ACC_MOSI
SCL/SPC
CS
SDO/SA0
SDA/SDI/SDO
INT_1
INT_2
RES
GND(1)
VDD_IO
VDD
GND(3)
GND(2)
C126
100n
V33
C134
100n
U107
VDD
Vdd IO
INT DRDY
CS
SCL/SPC
SDA/SDI/SDO
SDO/SA0
RES
GND
GND
BARO_SCL
BARO_SDA
LPS22HBTR

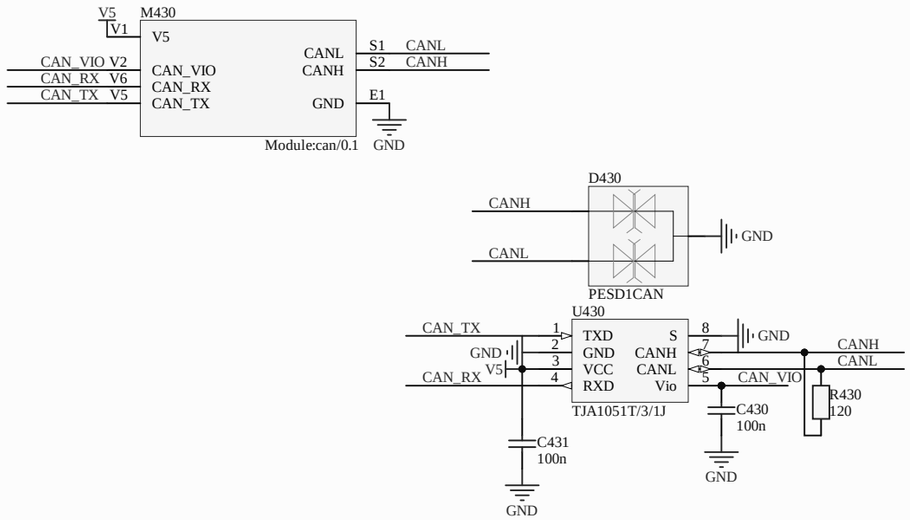

Title: ***Hellen-One CAN***			***rusEFI EMS*** ***Hellen-One Platform*** *https://rusefi.com/s/hellen72*
Size: A3	Author: andreika	Revision: 0.1	
Date: 02.03.2021		Sheet 1 of 1	