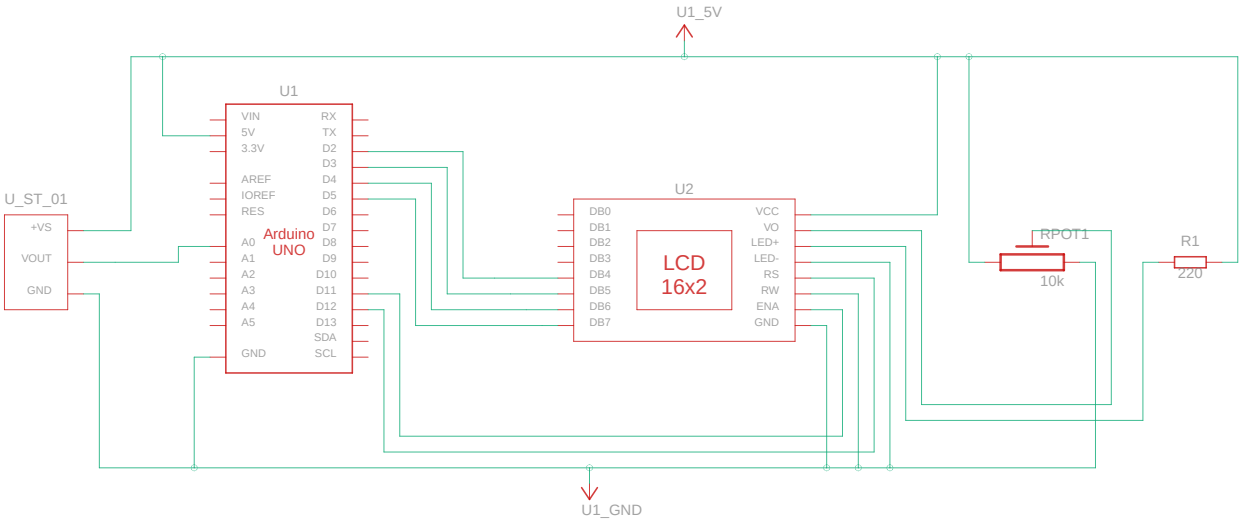

Made with Tinkercad®

Title: Copy of Termômetro Digital com sensor TMP36

Date: 08/08/2025, 10:52:58 Sheet: 1/1