IT214
DATABASE MANAGEMENT SYSTEM

Title: - Airline Management

Team Details

NAME (ID)
Rushi Gadhiya (202301156)
RishitRaj Jain (202301167)
Kathan Parikh (202301133)
Rushabh Jain (202301154)

ER-Diagram

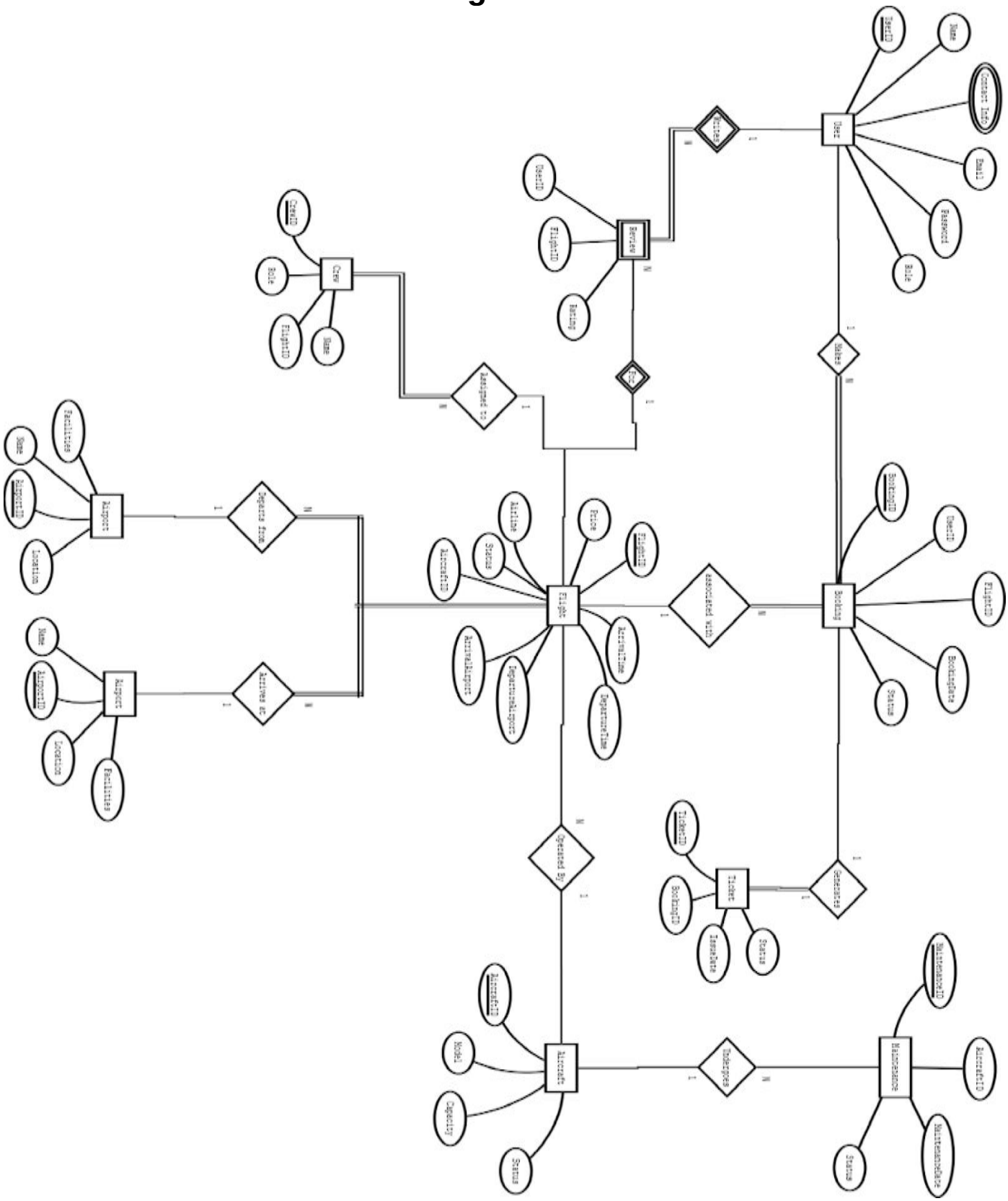
User
UserID
Name
Contact Info
Email
Password
Role
Writes
Review
UserID
FlightID
Rating
Crew
CrewID
Role
FlightID
Name
Assigned to
Makes
Booking
BookingID
UserID
FlightID
BookingDate
Status
associated with
Flight
Airline
Price
FlightID
Status
AircraftID
ArrivalAirport
DepartureAirport
ArrivalTime
DepartureTime
Departs from
Airport
Facilities
Name
AirportID
Location
Arrives at
Airport
Name
AirportID
Location
Facilities
Operated By
Generates
Ticket
TicketID
BookingID
IssueDate
Status
Aircraft
AircraftID
Model
Capacity
Status
Undergoes
Maintenance
MaintenanceID
AircraftID
MaintenanceDate
Status

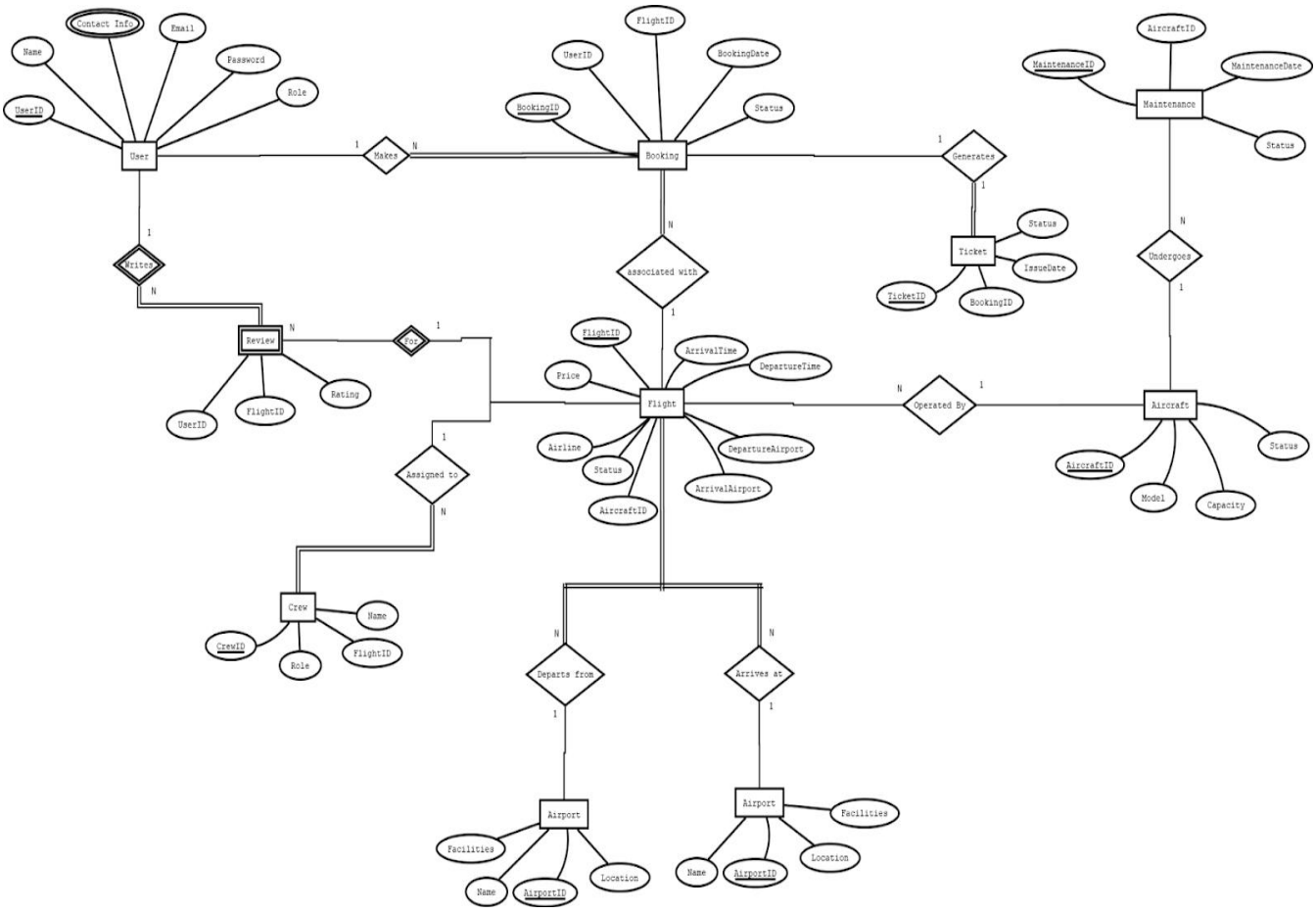

Relational Schema :

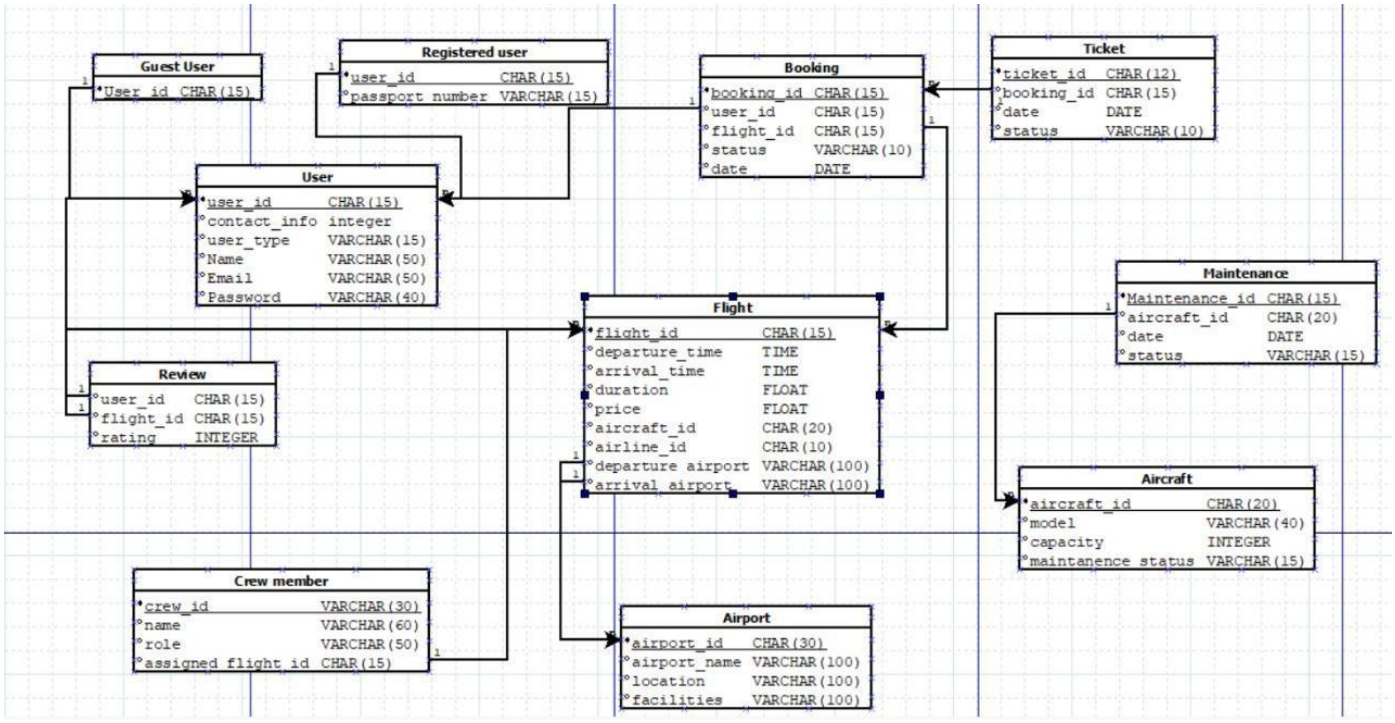

Functional Dependencies (FDs) and their Minimal Sets (also called Canonical Covers) for each table is given below:

1. User Table

Attributes:
user_id, contact_info, user_type, Name, Email, Password

FDs:

user_id → contact_info, user_type, Name, Email, Password

Minimal FD Set:

user_id → contact_info

user_id → user_type

user_id → Name

user_id → Email

user_id → Password

Candidate Key: user_id
Already in BCNF since LHS is a candidate key.

2. Guest_User Table

Attributes:
user_id

FDs:

user_id → user_id (trivial FD only)

Minimal FD Set:

user_id → user_id

Candidate Key: user_id
Already in BCNF since LHS is a candidate key.

3. Registered_User
Table Attributes:
user_id, passport_number

FDs:

user_id → passport_number

Minimal FD Set:

user_id → passport_number

Candidate Key: user_id
Already in BCNF since LHS is a candidate key.

4. Booking Table

Attributes:
booking_id, user_id, flight_id, status, date

FDs:

booking_id → user_id, flight_id, status, date

Minimal FD Set:

booking_id → user_id

booking_id → flight_id

booking_id → status

booking_id → date

Candidate Key: booking_id
Already in BCNF since LHS is a candidate key.

5. Ticket Table

Attributes:
ticket_id, booking_id, date, status

FDs:

ticket_id → booking_id, date, status

Minimal FD Set:

ticket_id → booking_id

ticket_id → date

ticket_id → status

Candidate Key: ticket_id
Already in BCNF since LHS is a candidate key.

6. Flight Table

Attributes:
flight_id, departure_time, arrival_time, duration, price, aircraft_id, airline_id, departure_airport, arrival_airport

FDs:

flight_id → departure_time, arrival_time, duration, price, aircraft_id, airline_id, departure_airport, arrival_airport

Minimal FD Set:

flight_id → departure_time

flight_id → arrival_time

flight_id → duration

flight_id → price

flight_id → aircraft_id

flight_id → airline_id

flight_id → departure_airport

flight_id → arrival_airport

Candidate Key: flight_id
Already in BCNF since LHS is a candidate key.

7. Review Table

Attributes:
user_id, flight_id, rating

FDs:

(user_id, flight_id) → rating ,

Minimal FD Set:

(user_id, flight_id) → rating

Candidate Key: (user_id, flight_id)
Already in BCNF since LHS is a candidate key.

8. Crew_Member Table

Attributes:
crew_id, name, role, assigned_flight_id

FDs:

crew_id → name, role, assigned_flight_id

Minimal FD Set:

crew_id → name

crew_id → role

crew_id → assigned_flight_id
Candidate Key: crew_id
Already in BCNF since LHS is a candidate key.

9. Airport Table

Attributes:
airport_id, airport_name, location, facilities

FDs:

airport_id → airport_name, location, facilities
airport_name → location, facilities *(if name is unique)*
Minimal FD Set:

airport_id → airport_name

airport_id → location

airport_id → facilities
Candidate Key: airport_id
Already in BCNF since LHS is a candidate key.

10. Aircraft Table

Attributes:
aircraft_id, model, capacity, maintenance_status

FDs:

aircraft_id → model, capacity, maintenance_status
model → capacity *(if model implies fixed capacity)*

Minimal FD Set:

aircraft_id → model

aircraft_id → capacity

aircraft_id → maintenance_status
Candidate Key: aircraft_id

Already in BCNF since LHS is a candidate key.

11. Maintenance Table

Attributes:
maintenance_id, aircraft_id, date, status

FDs:

maintenance_id → aircraft_id, date, status
aircraft_id, date → status *(if at most 1 maintenance per aircraft/date)*

Minimal FD Set:

maintenance_id → aircraft_id

maintenance_id → date

maintenance_id → status

Candidate Key: maintenance_id
Already in BCNF since LHS is a candidate key.