Bharatiya Vidya Bhavan's

Sardar Patel Institute of Technology

Bhavan's Campus, Munshi Nagar, Andheri (West), Mumbai-400058-India
(Autonomous College Affiliated to University of Mumbai)

Assignment-2, 20th Feb 2026

Max. Marks: 30 **ISE Theory**
Class: T.E. EXTC **Semester: 6**
Course Code: EC307 **Branch: Electronics and Telecom Engineering**
Name of the Course: Power Electronics

Instructions:

(1) Start Date: 7th Feb 2026
(2) End Date: 14th Feb 2026, Midnight 12
(3) Moodle Submission

Question No.		Max. Marks	CO/BL
Q 1 (a)	State whether following statements are True/False and justify with appropriate reasoning: (1) PIV rating of each diode in Bridge rectifier is equals to the supply voltage peak value (2) The overall power factor of the circuit is always related to the phase difference between voltage and current (3) The PIV rating of each diode in a center-tap rectifier is equals to the supply voltage peak value. (4) As the supply frequency increases the cap filter value for the same load is reducing (5) In a single phase DBR, as the Cap. filter size is increasing, the THD is reducing.	**05**	CO-2 BL-1
Q 1 (b)	A full-wave diode bridge rectifier is fed from 120V (+/- 10%), 60Hz AC Supply with the output side load has a power rating of 3000Watt and the maximum peak-peak voltage ripple at the max load is to be reduced to 5V by placing an appropriate AL Elctrolytic Capacitor. Find the average Output Voltage.	**02**	CO-2 BL-2
Q 1 (c)	For the diode rectifier as specified in Q. 1(b). Find the minimum value of the filter capacitor and its RMS Current with Peak Voltage rating. Also find the PIV rating of the individual diode and its average and peak current rating. Also find the peak and average value of the source current	**08**	CO-2 BL- 3

Q 1 (d)	A circuit is generating a mixed analog signal with both dc and ac component. The dc component 100 A and the ac component has the equation 10sin(314t). Find the RMS Value of the resultant waveform.	**03**	CO-2 BL-3
Q.1 (e)	he figure shows the circuit of a rectifier fed from a 230 V (rms), 50 Hz sinusoidal voltage source. If we want to replace the current source with a resistor so that the rms value of the current supplied by the voltage source remains unchanged, the value of resistance (in Ω) is _____ (Assume diodes to be ideal). 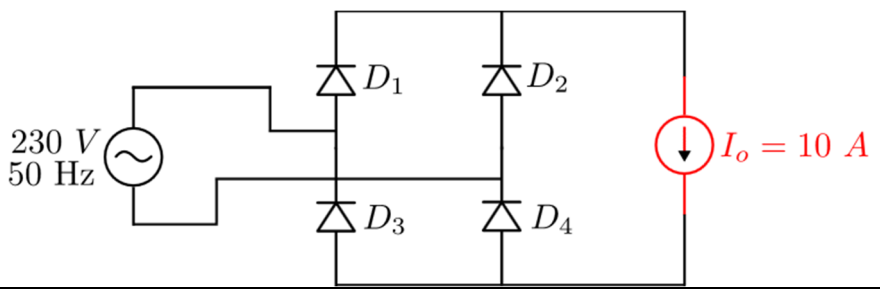 	**02**	CO-2 BL-3

Q.2 (a)	A diode bridge rectifier as shown in the Fig.1 is being fed from a periodic ac voltage $v_{AB}(t)$, a symmetric quasi-square waveform as shown above with its fundamental component being $v_{AB1}(t)$. The voltage V_{dc}=314.16 Volts; The time t_0=2µs and t_{on}=4µs. The Maximum load power is 1000 Watt. Answer the following questions assuming ideal diodes: (a) Write a time domain expression for the instantaneous value of $v_{AB1}(t)$. (b) Find the average value of V_o. (c) Design the value of filter capacitor C_f, assuming ripple voltage of 5%. (d) Find the RMS Current rating of C_f. (e) Find the PIV rating of the individual diode. (f) Find the peak and average current rating of the individual diode. 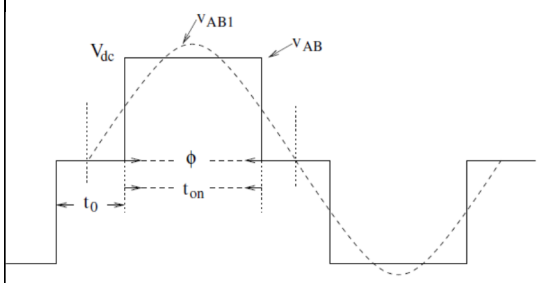 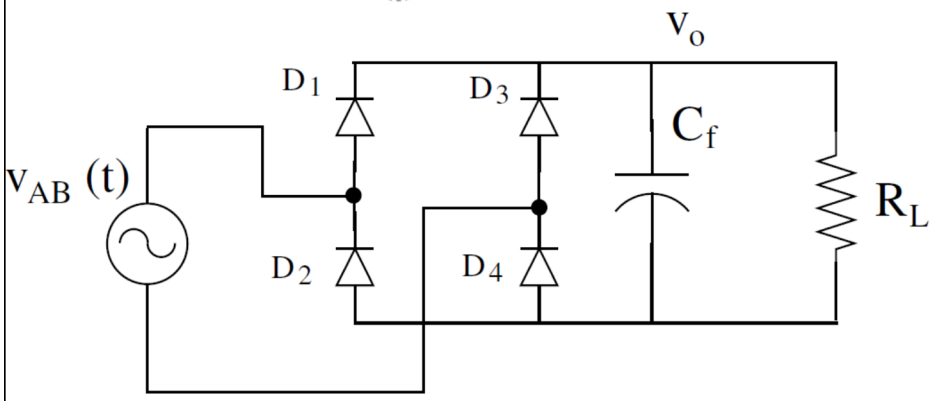 The Assignment Ends here……..	10	CO-2 BL-3