南京拓品微电子有限公司

NanJing Top Power ASIC Corp.

TP4056
(1A Standalone Linear Li-Ion Battery Charger)

DESCRIPTION

The TP4056 is a complete constant-current/constant-voltage linear charger for single cell lithium-ion batteries. It's ESOP8/EMSOP8 package and low external component count make the TP4056 ideally suited for portable applications. The TP4056 is designed to work within USB power specifications (wall adaptor or USB supply).

No external sense resistor or blocking diode is required due to it's internal PMOSFET architecture and integrated reverse discharge protection. TP4056 limits the charge current based on die temperature during high power operation or high ambient temperature. The charge voltage is fixed at 4.2V, and the charge current can be programmed externally with a resistor. TP4056 automatically terminates the charge cycle when the charge current drops to 1/10th of the programmed value after reaching the final float voltage.

When input power supply is removed, TP4056 will enter a low current state with battery drain current less than 2uA. TP4056 can also enter a shut-down mode with power supply, lowering supply current to less than 55uA.

Other features include cell temperature monitor, under voltage lockout, automatic recharge and two LED status indication pins for charge termination and presence of an input voltage.

FEATURES

·Programmable Charge Current Up to 1000mA
·No MOSFET, Sense Resistor or Blocking Diode Required
·Complete single-cell linear Li-Ion battery charger in ESOP8/EMSOP8 Package
·Constant-Current/Constant-Voltage operation with thermal regulation
·Preset 4.2V Charge Voltage with 1% Accuracy
·Automatic Recharge
·Automatic End-of-charge control
·UVLO
·Two Charge Status Output Pins
·C/10 Charge Termination
·55uA Charge Current in Standby Mode
·2.9V Trickle Charge Threshold
·Soft-Start Limits Inrush Current
·8-Lead ESOP /EMSOP Package

ABSOLUTE MAXIMUM RATINGS

·Input Supply Voltage(V_{CC})：-0.3V ~ 8V
·PROG：-0.3V ~ Vcc+0.3V
·BAT：-0.3V ~ 0.7V
·EMBED PBrush：-0.3V ~ 10V
·TEMP：-0.3V ~ 10V
·CE：-0.3V ~ 10V
·BAT Short-Circuit Duration：Continuous
·BAT Pin Current：1200mA
·PROG Pin Current：1200uA
·Maximum Junction Temperature：145℃
·Operating Ambient Temperature Range：-40℃~85℃
·Storage Temperature Range：-65℃~125℃
·Lead Temp.(Soldering, 10sec)：260℃

APPLICATIONS

·Cellular Telephones, PDAs, GPS
·Charging Docks
·Digital Cameras, Portable Devices
·USB Bus-Powered Chargers

COMPLETE CHARGE CYCLE
(1000mAh Battery)

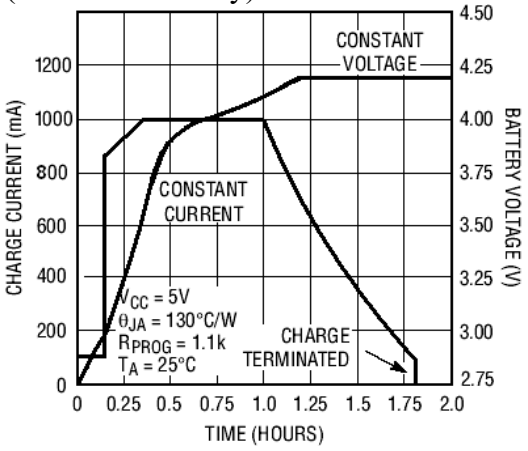

TYPICAL APPLICATIONS

1. With temperature monitoring and charging status indicators.

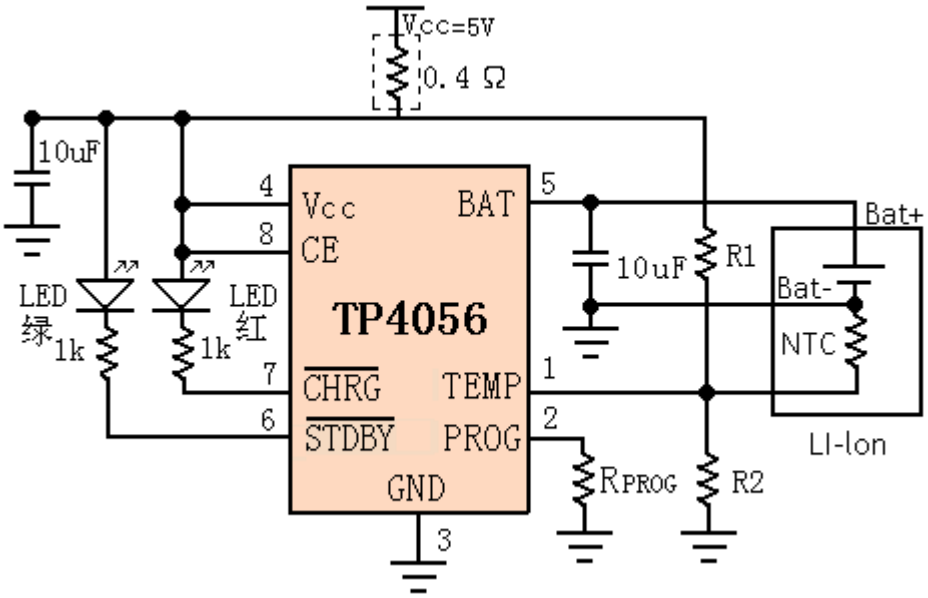

2. With charging status indicator but no battery temperature monitoring (Left)
3. With neither charging status indicator nor battery temperature monitoring (Right)

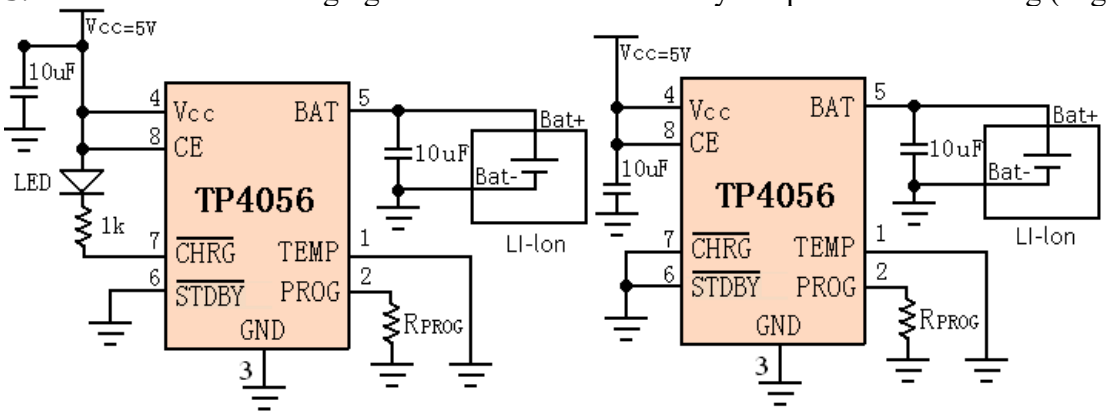

4. Applications for both USB and Wall adaptor charging (Left)
5. Red LED for charging, green LED for charging completes. External R for heat dissipation. (Right)

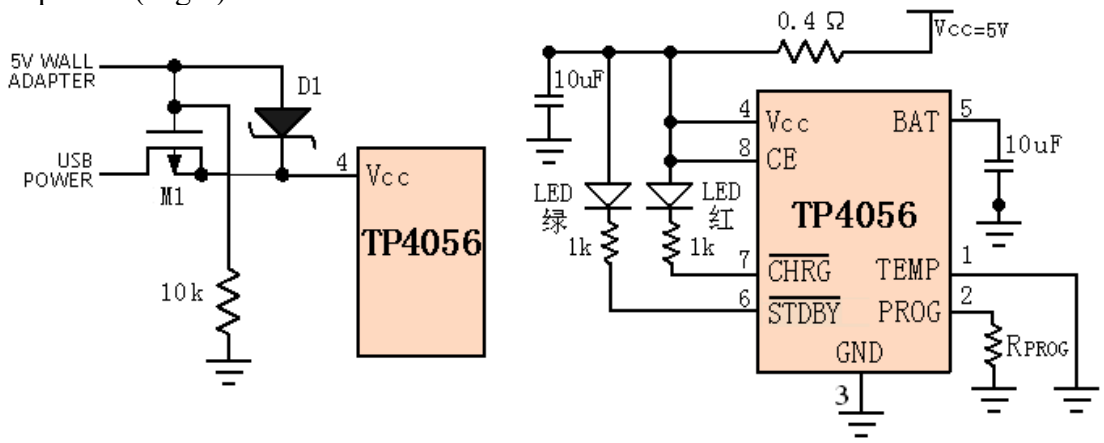

PACKAGE/ORDER INFORMATION

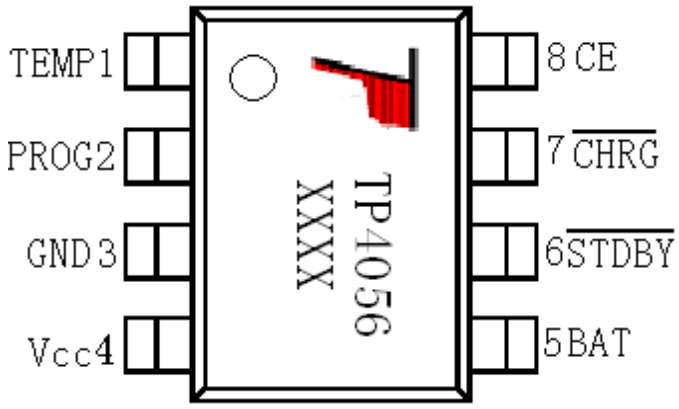

ESOP8

ORDER PART NUMBER
TP4056-42-ESOP8
PART MARKING
TP4056

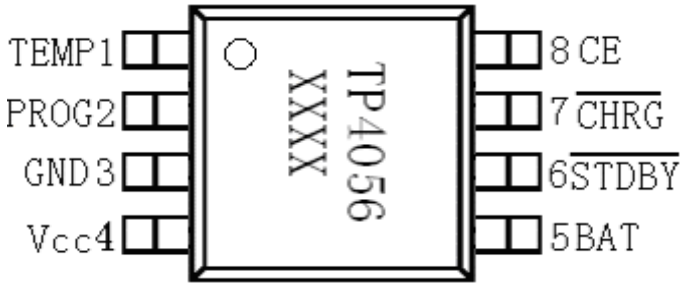

EMSOP8

ORDER PART NUMBER
TP4056-42-EMSOP8
PART MARKING
TP4056
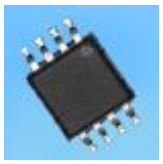

ELECTRICAL CHARACTERISTICS

The ● denotes specifications which apply over the full operating temperature range, otherwise specifications are at TA=25℃，VCC =5V, unless otherwise noted.

SYMBOL	PARAMETER	CONDITIONS		MIN	TYP	MAX	UNITS
V_{CC}	Input Supply Voltage		●	4.0	5	8.0	V
I_{CC}	Input Supply Current	Charge Mode, R_{PROG} = 1.1K Standby Mode (Charge Terminated), Shutdown Mode (R_{PROG} Not Connected, $V_{CC} < V_{BAT}$, or $V_{CC} < V_{UV}$)	● ● ●		150 55 55	500 100 100	μA μA μA
V_{FLOAT}	Regulated Output (Float) Voltage	0℃≤TA≤85℃，IBAT=40mA		4.158	4.2	4.242	V
I_{BAT}	BAT Pin Current (Test condition: VBAT=4.0V)	R_{PROG}=2.2K, Current Mode R_{PROG}=1.1K, Current Mode Standby Mode, V_{BAT} = 4.2V Shutdown Mode((R_{PROG} Not Connected) Sleep Mode, V_{CC} =0V	● ● ●	425 850 0	500 1000 -2.5 ±1 -1	575 1150 -6 ±2 -2	mA mA μA μA μA
I_{TRIKL}	Trickle Charge Current	$V_{BAT}<V_{TRIKL}$, R_{PROG}=1.1K	●	120	130	140	mA
V_{TRIKL}	Trickle Charge Threshold Voltage	R_{PROG}=1.1K, V_{BAT} Rising		2.8	2.9	3.0	V
V_{TRHYS}	Trickle Charge Hysteresis Voltage	R_{PROG}=1.1K		60	80	100	mV
V_{UV}	V_{CC} UVLO Voltage	V_{CC} from low to high	●	3.5	3.7	3.9	V
V_{UVHYS}	V_{CC} UVLO Hysteresis		●	150	200	300	mV
V_{ASD}	V_{CC}-V_{BAT} lockout threshold voltage	V_{CC} from low to high V_{CC} from high to low		60 5	100 30	140 50	mV mV
I_{TERM}	C/10 termination current threshold	R_{PROG}=2.2K R_{PROG}=1.1K	● ●	60 120	70 130	80 140	mA mA
V_{PROG}	PROG pin voltage	R_{PROG}=1.2K，current mode	●	0.9	1.0	1.1	V
$V_{\overline{CHRG}}$	$V_{\overline{CHRG}}$ Pin output low voltage	$I_{\overline{CHRG}}$ =5mA			0.3	0.6	V
$V_{\overline{STDBY}}$	$V_{\overline{STDBY}}$ Pin output low voltage	$I_{\overline{STDBY}}$ =5mA			0.3	0.6	V
V_{TEMP-H}	TEMP upper trip threshold				80	82	%Vcc
V_{TEMP-L}	TEMP lower trip threshold			43	45		%Vcc
ΔV_{RECHRG}	Recharge battery threshold voltage	V_{FLOAT}-V_{RECHRG}		100	150	200	mV
T_{LIM}	Junction Temperature in Constant Temperature Mode				145		℃
R_{ON}	The resistance of power FET "ON"（between VCC and BAT				650		mΩ
t_{ss}	Soft-start time	I_{BAT}=0 to I_{BAT}=1100V/R_{PROG}			20		μs
$t_{RECHARGE}$	Recharge comparator filter time	V_{BAT} from high to low		0.8	1.8	4	ms
t_{TERM}	Termination comparator filter time	I_{BAT} drops below I_{CHG}/10		0.8	1.8	4	ms
I_{PROG}	PROG pin pull-up current				2.0		μA

TYPICAL PERFORMANCE CHARACTERISTICS

PROG Pin Voltage vs Supply Voltage (Constant Current Mode)

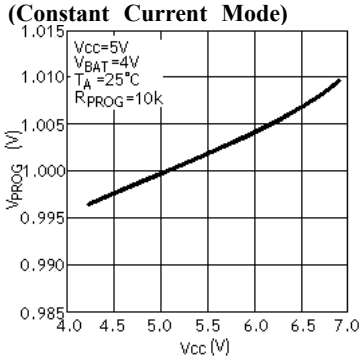

PROG Pin Voltage vs Temperature

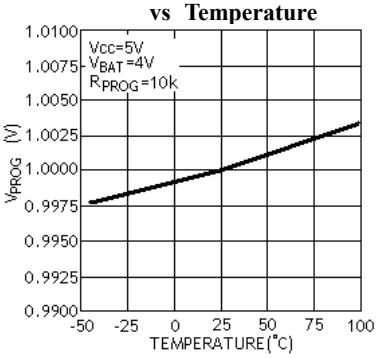

Charge Current vs PROG Pin Voltage

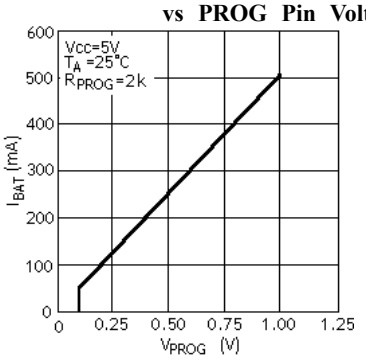

Regulated Output (Float) Voltage vs Charge Current

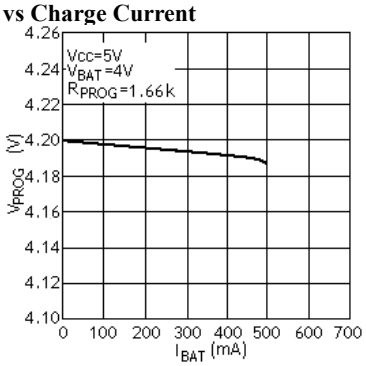

Regulated Output (Float) Voltage vs Temperature

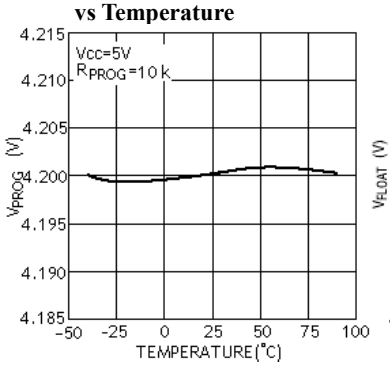

Regulated Output (Float) Voltage vs Supply Voltage

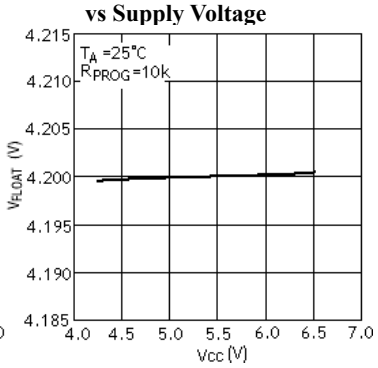

Trickle Charge Threshold Voltage vs Temperature

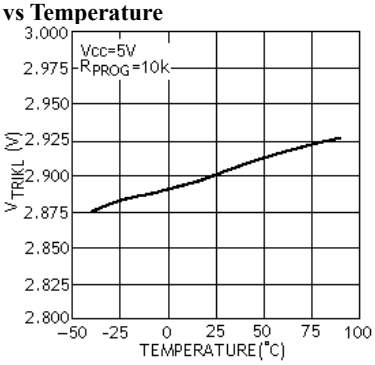

Charge Current vs Battery Voltage

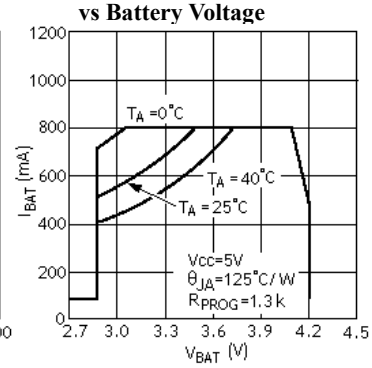

Charge Current vs Supply Voltage

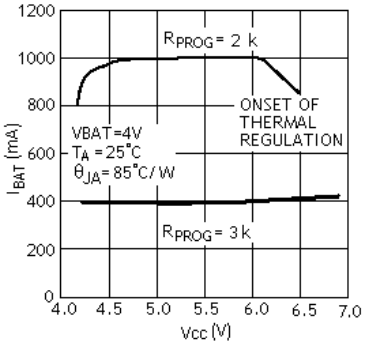

Charge Current vs Ambient Temperature

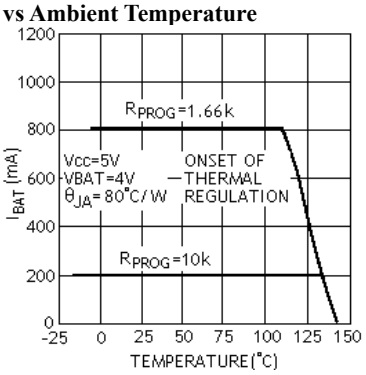

Recharge Threshold Voltage vs Temperature

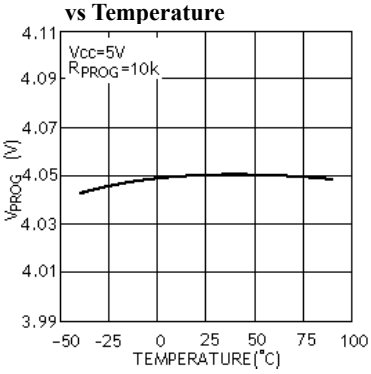

Power FET "ON" Resistance vs Temperature

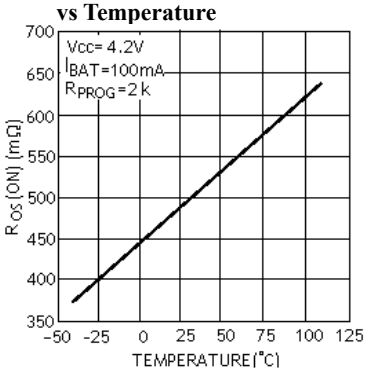

PIN FUNCTIONS

TEMP (Pin 1) : Temperature Sense Input. Connecting TEMP pin to NTC thermistor's output pin in Lithium ion battery pack. If TEMP pin's voltage is below 45% or above 80% of supply voltage VIN, this means that battery's temperature is too high or too low, charging is suspended. The temperature sense function can be disabled by grounding the TEMP pin.

PROG (Pin 2): Constant Charge Current Programming and Charge Current Monitor. Charge current is programmed by connecting a resistor RISET from this pin to GND. When in recharge mode, this pin's voltage is regulated to 0.1V. When in constant-current mode, this pin is regulated to 1V. In all modes during charging, the voltage on this pin can be used to measure the charge current as follows:
$I_{BAT}=(V_{PROG}/R_{PROG}) \cdot 1100$

GND (Pin3): Ground Terminal

Vcc (Pin 4): Positive Input Supply Voltage. Provides power to the charger. When VCC is within 30mV of the BAT pin voltage, the TP4056 enters shutdown mode dropping BAT pin's current to less than 2μA.

BAT (Pin5): Battery Connection. Connect the positive terminal of the battery to the BAT pin. BAT pin provides charge current to the battery and regulates the final float voltage to 4.2V. BAT pin draws less than 2uA current in chip disable mode or in sleep mode.

$\overline{STDBY}$ **(Pin6)**: Charge Status Open-Drain Output. When battery charge cycle completes, $\overline{STDBY}$ pin is pulled low by an internal switch, otherwise $\overline{STDBY}$ pin is high impedance.

$\overline{CHRG}$ **(Pin7)**: Charge Status Open Drain Output. When the battery is charging, the $\overline{CHRG}$ pin is pulled low by an internal switch, otherwise $\overline{CHRG}$ pin is high impedance.

CE (Pin8): Chip Enable Input. A logic high on CE pin will put the device in normal operation mode. Pulling the CE pin to low will put the TP4056 into shutdown mode. The CE pin can be driven by TTL or CMOS logic level.

BLOCK DIAGRAM

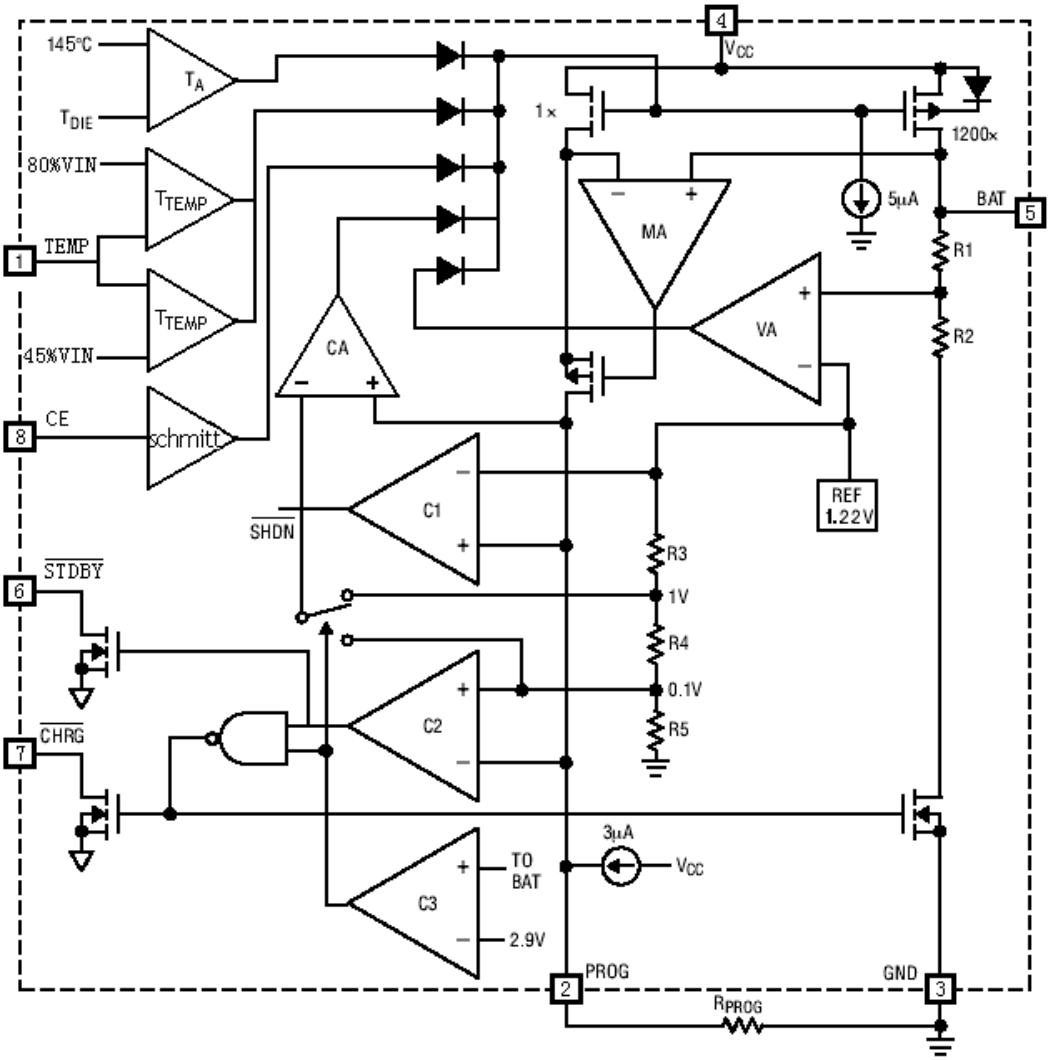

OPERATION

The TP4056 is a complete CC/CV linear charger for single cell lithium-ion batteries. It can deliver up to 1A of charge current with a final float voltage accuracy of ±1%. The TP4056 includes an internal PMOS architecture and thermal regulation circuitry. No blocking diode or external current sense resistor is required. TP4056 includes two charge status open-drain pins: charge status indicator $\overline{CHRG}$ and battery failure status output $\overline{STDBY}$. The internal thermal regulation circuit reduces the programmed charge current if the die temperature attempts to rise above a preset value of approximately 145 °C. This feature protects the TP4056 from excessive temperature, and allows the user to push the limits of the power handling capability of a given circuit board without risk of damaging the TP4056. Another benefit of adopting thermal regulation is that charge current can be set according to typical, not worst-case, ambient temperature for a given application with the assurance that the charger will automatically reduce the current in worst-case conditions.

Normal Charge Cycle

The charge cycle begins when the voltage at the V_{CC} pin rises above the UVLO threshold level, a program resistor is connected from the PROG pin to ground, and the CE pin is pulled above the chip enable threshold. The $\overline{CHRG}$ pin outputs a logic low to indicate that the charge cycle is on going. When the battery voltage is below 3V, the charger enters trickle charge mode to bring the battery voltage up to a safe level for

charging. When voltage on the BAT pin rises above 3V, the charger goes into the fast charge CC mode. In CC mode, the charge current is set by R_{PROG}. When the battery approaches the final float voltage of 4.2V, the charge current begins to decrease as the TP4056 enters the CV mode. When the charge current drops to 1/10th of the programmed value, the charge cycle terminates, and $\overline{CHRG}$ pin becomes high impedance while $\overline{STDBY}$ pin is pulled low.

The charge cycle can also be automatically restarted if the BAT pin voltage falls below the recharge threshold. The on-chip reference voltage, error amplifier and the resistor divider network provide regulation voltage with 1% accuracy, which can meet the requirement of lithium-ion and lithium polymer batteries. When the input voltage is not present, or input voltage is below VBAT, the charger enters a sleep mode, dropping battery drain current to less than 3 μ A. This greatly reduces the current drain on the battery and increases the standby time. The charger can be shut down by forcing the CE pin to GND.

Programming Charge Current

The charge current is programmed using a single resistor from the PROG pin to ground. The program resistor and the charge current are calculated using the following equations.

$$R_{PROG} = \frac{1100}{I_{BAT}}$$

In applications, one can refer to the following chart showing the relation between R_{PROG} and charge current:

R_{PROG} (k)	I_{BAT} (mA)
30	50
20	70
10	130
5	250
4	300
3	400
2	580
1.6	690
1.4	780
1.2	900
1.1	1000

Charge Termination

A charge cycle terminates when the charge current falls to 1/10th the programmed value after the final float voltage is reached. This condition is detected by using an internal filtered comparator to monitor the PROG pin. When the PROG pin voltage falls below 100mV for longer than t_{TEMP} (typically 1.8ms), charging is terminated. The charge current is latched off and the TP4056 enters standby mode, where the input supply current drops to 55 μA.

(Note: C/10 termination is disabled in trickle charging and thermal limiting modes).

When charging, transient loads on the BAT pin can cause the PROG pin to fall below 100mV for short periods of time before the DC charge current has dropped to 1/10th the programmed value. The 1.8ms filter time (t_{TEMP}) on the termination comparator ensures that transient loads of this nature do not result in premature charge cycle termination. Once the average charge current drops below 1/10th the programmed value, the TP4056 terminates the charge cycle and ceases to provide any current through the BAT pin. In this state all loads on the BAT pin must be supplied by the battery.

The TP4056 constantly monitors the BAT pin voltage in standby mode. If this voltage drops below the 4.05V recharge threshold (V_{RECHRG}), another charge cycle begins and charge current is once again supplied to the battery. Figure 1 shows the state diagram of a typical charge cycle.

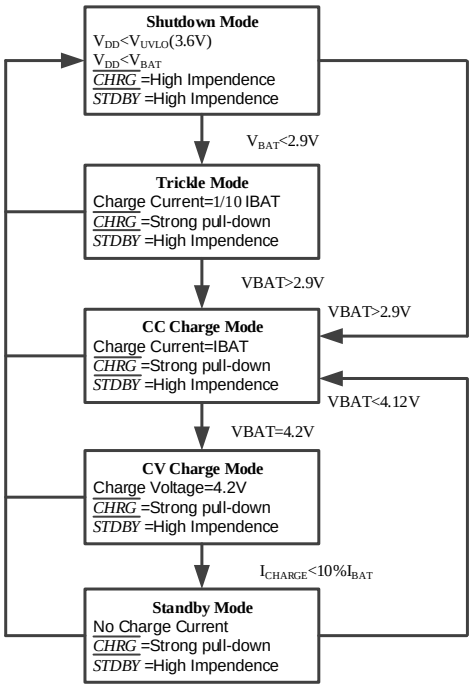

Fig.1 State diagram of a typical charge cycle

Charge status indicator

TP4056 has two open-drain status indicator: $\overline{CHRG}$ and $\overline{STDBY}$. $\overline{CHRG}$ is pull-down when the TP4056 is in a charge cycle, and $\overline{CHRG}$ becomes high impedance for other states. Both $\overline{CHRG}$ and $\overline{STDBY}$ will be high impedance when the battery is operating out of the normal temperature.

When TEMP pin is connected, and battery is not connected to charger: both red LED and green LED are OFF to indicate a failure mode. When TEMP is grounded, the battery temperature sense function is disabled. If battery is not connected to charger, $\overline{CHRG}$ pin outputs a PWM level to indicate no battery failure mode. If BAT pin connects to a 10 μ F capacitor, the frequency of $\overline{CHRG}$ flicking will be with T=1-4s.

If not using a status indicator, the pins should be connected to GND.

Charger's Status	Red LED $\overline{CHRG}$	Green LED $\overline{STDBY}$
Charging	ON	OFF
Charging Completes	OFF	ON
Under-voltage, battery's temperature is too high or too low, or not connect to battery (TEMP pin in use)	OFF	OFF
BAT pin is connected to 10uF capacitor, and not connect to battery (TEMP connects to GND)	Green LED ON, Red LED flickering with T=1-4s	

Thermal limiting

An internal thermal feedback loop reduces the programmed charge current if the die temperature attempts to rise above a preset value of approximately 140 °C, and current will be reduced to zero if die temperature reaches beyond 150 °C. This feature protects the TP4056 from excessive temperature and allows the user to push the limits of the power handling capability of a given circuit board without risk of damaging the TP4056. The charge current can be set according to typical (not worst-case) ambient temperature with the assurance that the charger will automatically reduce the current in worst-case conditions.

To prevent the damage caused by the very high or very low temperature done to the battery pack, the TP4056 continuously senses battery pack temperature by measuring the voltage at TEMP pin determined by the internal voltage divider circuit and the battery's internal NTC thermistor as shown in Figure 1.

The TP4056 compares the voltage at TEMP pin (V_{TEMP}) against it's internal V_{TEMP_L} and V_{TEMP_H} thresholds to determine if charging is allowed. $V_{TEMP_L}$is fixed at (45%×Vcc), while V_{TEMP_H} is fixed at (80%×Vcc). If $V_{TEMP}<V_{TEMP_L}$ or $V_{TEMP}>V_{TEMP_H}$, it indicates that the battery temperature is too high or too low and the charge cycle is suspended. When V_{TEMP} is in between V_{TEMP_L} and V_{TEMP_H} , charging cycle resumes. The battery temperature sense function can be disabled by connecting TEMP pin to GND.

Selecting R1 and R2

The values of R1 and R2 in the application circuit can be determined according to the assumed temperature monitor range and thermistor's values. See following example as a reference:

Assume temperature monitor range is TL～TH，(TL＜TH)；the thermistor in battery has negative temperature coefficient (NTC). RTL is thermistor's resistance at TL， RTH is the resistance at TH，so RTL＞RTH.

Then at temperature T_L, the voltage at TEMP pin is:

$$V_{TEMPL} = \frac{R2 \| R_{TL}}{R1 + R2 \| R_{TL}} \times VIN$$.

At temperature T_H, the voltage at TEMP pin is: .

$$V_{TEMPH} = \frac{R2 \| R_{TH}}{R1 + R2 \| R_{TH}} \times VIN$$

We know $V_{TEMPL} = V_{HIGH} = K2 \times Vcc$ (K2=0.8)；$V_{TEMPH} = V_{LOW} = K1 \times Vcc$ (K1=0.45)

Then we can have：

$$R1 = \frac{R_{TL} R_{TH} (K_2 - K_1)}{(R_{TL} - R_{TH}) K_1 K_2}$$

$$R2 = \frac{R_{TL} R_{TH} (K_2 - K_1)}{R_{TL}(K_1 - K_1 K_2) - R_{TH}(K_2 - K_1 K_2)}$$

Likewise, for positive temperature coefficient thermistor in battery, we have $R_{TH} > R_{TL}$ and we can calculate:

$$R1 = \frac{R_{TL} R_{TH} (K_2 - K_1)}{(R_{TH} - R_{TL}) K_1 K_2}$$

$$R2 = \frac{R_{TL} R_{TH} (K_2 - K_1)}{R_{TH}(K_1 - K_1 K_2) - R_{TL}(K_2 - K_1 K_2)}$$

We can conclude that temperature monitor range is independent of power supply voltage V_{CC} and it only depends on R1, R2, R_{TL} and R_{TH}. The values of R_{TH} and R_{TL} can be found in the related battery handbook or deduced from testing data. In actual application, if considering only one terminal temperature (normally protecting from overheating), there is no need to use R2.

Under Voltage lockout (UVLO)

An internal under voltage lockout circuit monitors the input voltage and keeps the charger in shutdown mode until V_{CC} rises above the under voltage lockout threshold . If the UVLO comparator is tripped, the charger will not come out of shutdown mode until V_{CC} rises 100mV above the battery voltage.

Manual Shutdown

At any time in the charge cycle, the TP4056 can be put into shutdown mode by pulling CE pin to GND, or removing R_{PROG}(PROG pin is float). This reduces the battery drain current to less than 2μA and the supply current to less than 55μA. To restart the charge cycle, pullup CE pin or connect a programming resistor.

If TP4056 is in the under voltage Lockout mode, both $\overline{CHRG}$ and $\overline{STDBY}$ become high impedance, meaning V_{CC} is not at least 100mV above BAT pin voltage, or V_{CC} is too low.

Automatic Recharge

Once the charge cycle is terminated, the TP4056 continues to monitor the voltage on BAT pin using a termination comparator with 1.8ms filter time ($t_{RECHARGE}$). If battery voltage drops below the 4.05V recharge threshold (approximately 80% to 90% of battery capacity), another charge cycle begins. This ensures the battery is kept at, or near, a fully charged condition to avoid the requirement of periodic charge cycle initiations. During recharge cycles, $\overline{CHRG}$ pin enters a pulled down state.

Stability Considerations

In constant-current mode, the PROG pin is in the feedback loop, not the battery. The constant-current mode stability is affected by the impedance at the PROG pin. Additional capacitance on this node reduces the maximum allowed program resistor. If the PROG pin is loaded with a capacitance, C_{PROG}, the following equation can be used to calculate the maximum resistance value for R_{PROG}:

$$R_{PROG} \le \frac{1}{2\pi \bullet 10^5 \bullet C_{PROG}}$$

Typically, average rather than instantaneous charge current may be of more interest to the user. For example, if a switching power supply operating in low current mode is connected in parallel with the battery, the average current being pulled out of the BAT pin is typically of more interest than the instantaneous current pulses. In such a case, a simple RC filter can be used on the PROG pin to measure the average battery current, as shown in Figure 2. A 10k resistor has been added between the PROG pin and the filter capacitor to ensure stability.

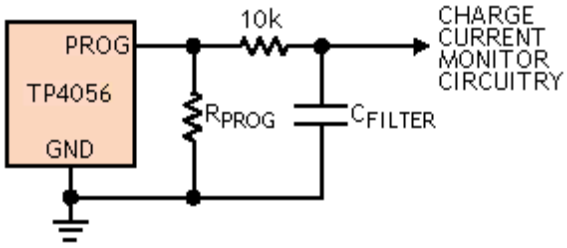

Fig.2 Isolating Capacitive Load on PROG Pin and Filtering

Power Dissipation

The conditions that cause the TP4056 to reduce charge current through thermal feedback can be approximated by considering the power dissipated in the IC. Nearly all of this power dissipation is generated by the internal MOSFET—this is calculated to be approximately:

$$P_D = (V_{CC} - V_{BAT}) \bullet I_{BAT}$$

where P_D is the power dissipated, V_{CC} is the input supply voltage, V_{BAT} is the battery voltage and I_{BAT} is the charge current. The approximate ambient temperature at which the thermal feedback begins to protect the IC is:

$$T_A = 145°C - P_D \theta_{JA}$$

$$T_A = 145°C - (V_{CC} - V_{BAT}) \bullet I_{BAT} \bullet \theta_{JA}$$

It is important to remember that TP4056 applications do not need to be designed for worst-case thermal conditions since the IC will automatically reduce power dissipation when the junction temperature reaches approximately 145°C.

Thermal Considerations

Because of the small size of the thin SOP-8 or ESOP-8 package, it is important to use a good thermal PC board layout to maximize the available charge current. The PC board copper is the heat sink. The footprint of the copper pads should be as wide as possible to spread and dissipate the heat to the surrounding ambient. Other heat sources on the board, not related to the charger, must also be considered when designing a PC board layout because they will have an impact on overall temperature rise and the maximum charge current.

Increasing Charge Current with Thermal Mode

Furthermore, lowering voltage across MOSFET can effectively reduce power dissipation of the IC during thermal regulation. An option is to dissipate some portion of the heat through an external component (resistor or a diode).

An example: A TP4056 operating from a 5V supply is programmed to supply 800mA full-scale current to a discharged Li-Ion battery with a voltage of 3.75V. Assuming θJA is 125°C/W, at 25°C the charge current is approximately:

$$I_{BAT} = \frac{145°C - 25°C}{(5V - 3.75V) \bullet 125°C / W} = 768mA$$

Power dissipation can be reduced by lowering voltage across the resistor that's in series with the 5V supply, increasing charge current:

$$I_{BAT} = \frac{145°C - 25°C}{(V_S - I_{BAT} R_{CC} - V_{BAT}) \bullet \theta_{JA}}$$

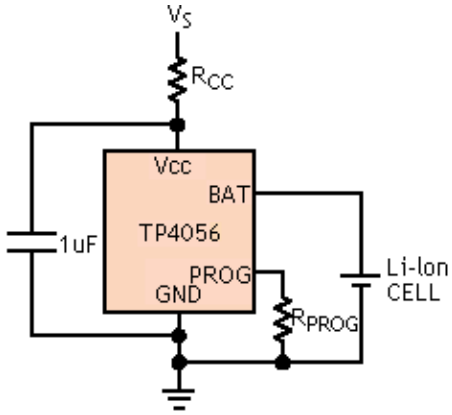

Fig.3 Circuit Example to Increase Charging Current

$$I_{BAT} = \frac{(V_S - V_{BAT}) - \sqrt{(V_S - V_{BAT})^2 - \frac{4R_{CC}(145°C - T_A)}{\theta_{JA}}}}{2R_{CC}}$$

I_{BAT} = 948mA, which shows such a circuit can supply 800mA full-scale charge current at a higher temperature.

Although this application can supply more charge current to save charging time, if Vcc drops low enough to make TP4056 at a low dropout mode, charging time may increase. Rcc needs to be carefully picked and dropout should be avoided to make this technique fully effective.

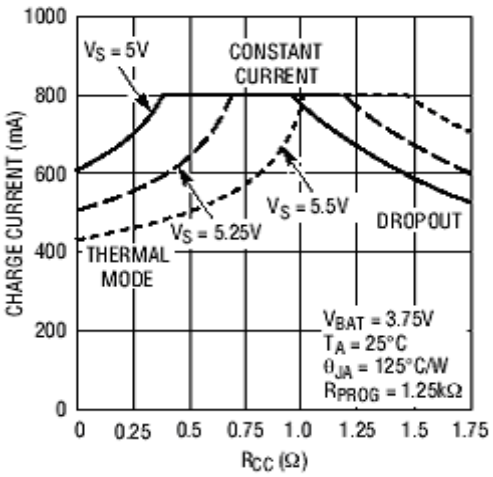

Fig.4 Charging Current and Rcc

CC bypass capacitor

Many types of capacitors can be used for input bypassing, however, caution must be exercised when using multilayer ceramic capacitors. Because of the self-resonant and high Q characteristics of some types of ceramic capacitors, high voltage transients can be generated under some start-up conditions, such as connecting the charger input to a live power source. Adding a 1.5 Ω resistor in series with a ceramic capacitor will minimize start-up voltage transients.

Charge Current Soft-Start

TP4056 includes a soft-start circuit to reduce the inrush current in the beginning of the charge cycle. When restarting a new charge cycle, the charging current ramps up from 0 to the full charging current over a period of 20μs, which can effectively minimize the transient current load on power supply during startup.

Reverse Polarity Input Voltage Protection

In some applications, protection from reverse polarity
voltage on VCC is required, and a series blocking diode can be used with high supply voltage while a P-channel MOSFET can be used when voltage drop needs to be kept low.

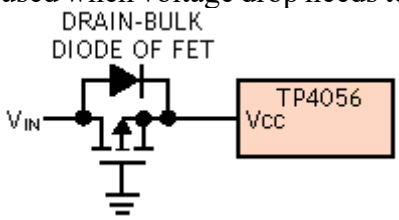

Fig.5 Reverse Polarity Input Voltage Protection

USB and Wall Adapter Power

The TP4056 supports charging from both a wall adapter and a USB port. Figure 6 shows an example of how to combine a wall adapter and USB power inputs.

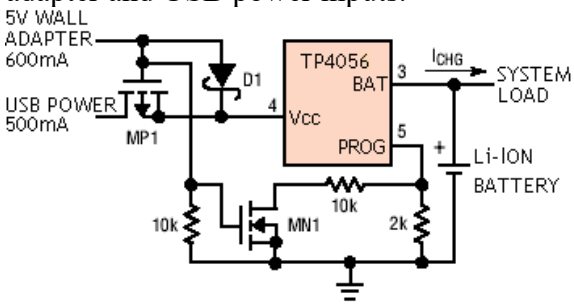

Fig.6 USB and Wall Adaptor Power

Board Layout Considerations

R_{PROG} at PROG pin should be as close to TP4056 as possible, also the parasitic capacitance at PROG pin should be kept as small as possible.

The capacitance at VCC pin and BAT pin should be as close to TP4056 as possible.

It is very important to use a good thermal PC board layout to maximize charging current. The thermal path for the heat generated by the IC is from the die to the copper lead frame through the package lead (especially the ground lead) to the PC board copper, where the PC board copper is the heat sink. The footprint of copper pads should be as wide as possible and expand out to larger copper areas to spread and dissipate the heat to the surrounding ambient. Feed through vias to inner or backside copper layers are also useful in improving the overall thermal performance of the charger. The ability to deliver maximum charge current under all conditions requires that the exposed metal pad on the back side of the TP4056 package be soldered to the PC board ground. Failure to make the thermal contact between the exposed pad on the backside of the package and the copper board will result in larger thermal resistance.

PACKAGE DESCRIPTION: ESOP8

	MIN(mm)	MAX(mm)		MIN(mm)	MAX(mm)
A	4.80	5.00	C3	0.00	0.09
A1	0.356	0.456	C4	0.203	0.233
A2	1.27TYP		D	1.05TYP	
A3	0.345TYP		D1	0.40	0.80
B	3.80	4.00	R1	0.20TYP	
B1	5.80	6.20	R2	0.20TYP	
B2	5.00TYP		θ1	17° TYP4	
C	1.30	1.60	θ2	13° TYP4	
C1	0.55	0.65	θ3	0° ~ 8°	
C2	0.55	0.65	θ4	4° ~ 12°	

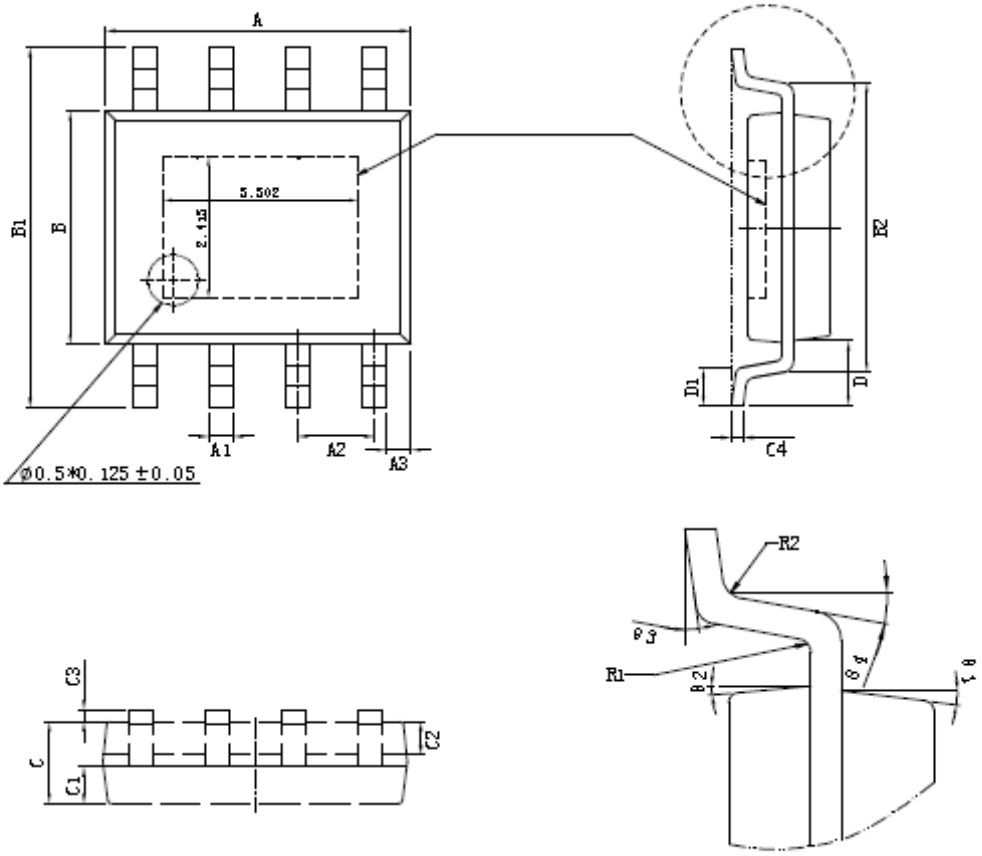

PACKAGE DESCRIPTION: EMSOP8
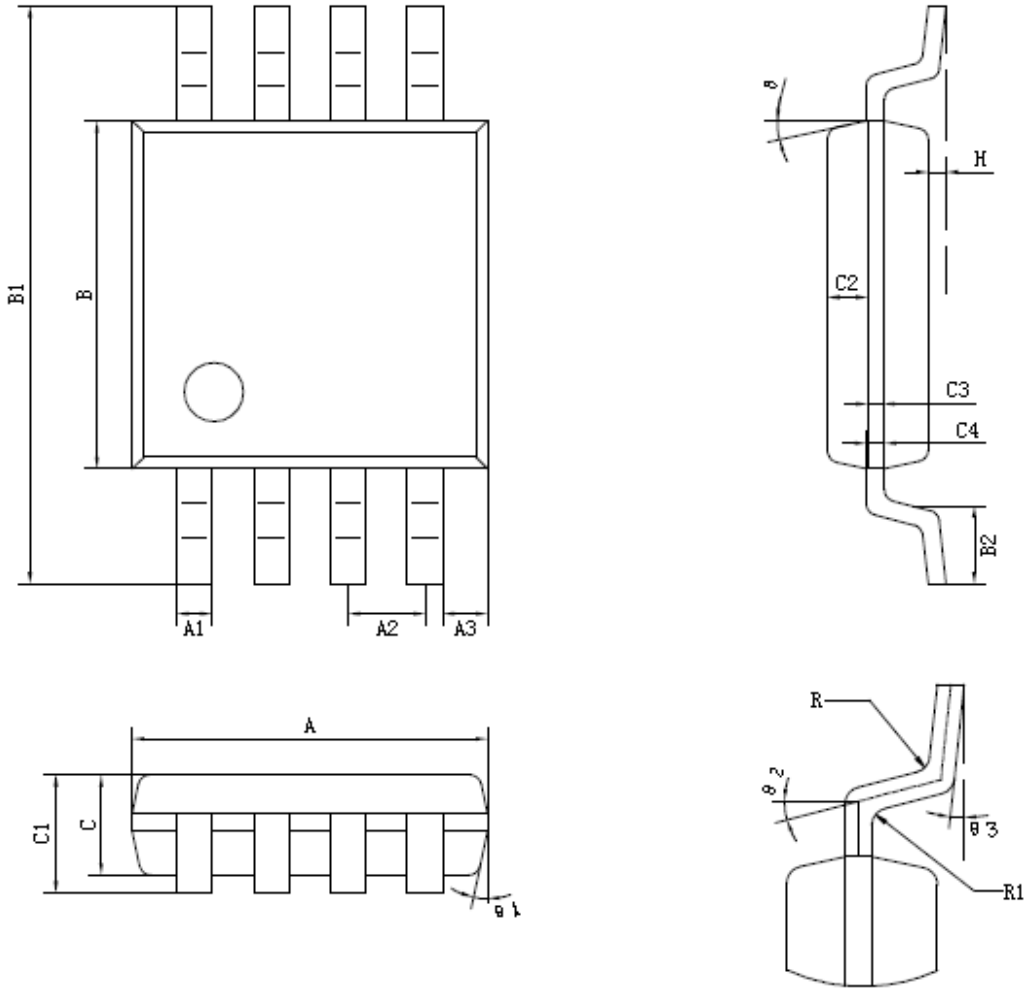
	MIN(mm)	MAX(mm)		MIN(mm)	MAX(mm)
A	2.90	3.10	C3	0.152	
A1	0.28	0.35	C4	0.15	0.23
A2	0.65TYP		H	0.00	0.09
A3	0.375TYP		θ	12° TYP4	
B	2.90	3.10	θ1	12° TYP4	
B1	4.70	5.10	θ2	14° TYP	
B2	0.45	0.75	θ3	0° ~ 6°	
C	0.75	0.95	R	0.15TYP	
C1	--	1.10	R1	0.15TYP	
C2	0.328TYP