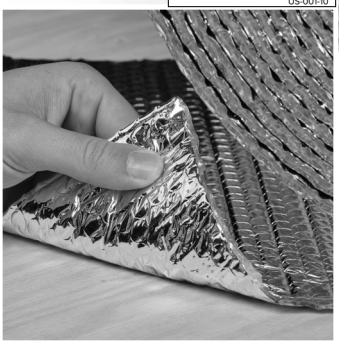

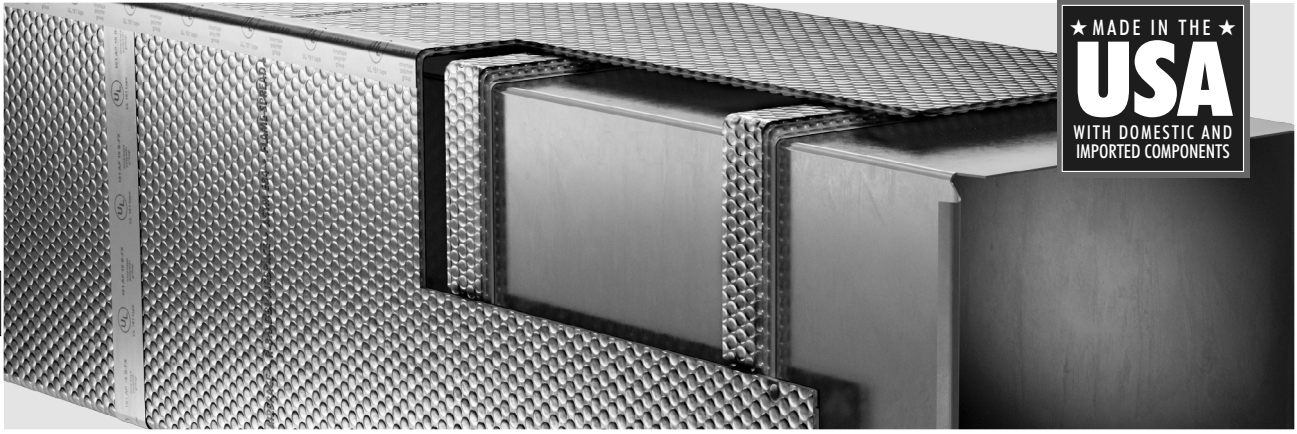

REFLECTIX® SUBMITTAL SHEET

Duct Insulation R-6.0

Reflectix® Duct Insulation is an alternative to other types of fibrous insulation products. Ease of handling and quick installation make Reflectix® the first choice when selecting insulation for round or rectangular ductwork in HVAC systems. The product provides an R-6.0 when installed with a 0.75″ air gap between the duct and the insulation. There is a choice of three spacer configurations that create the required air space.

PRODUCT DESCRIPTION

Reflectix® Duct Insulation consists of two layers of highly reflective film (96% reflectivity) that are bonded to two tough layers of polyethylene. Two inner layers of insulating bubbles resist conductive heat flow while a center layer of polyethylene gives Reflectix® high reliability and strength. The product has a tape running the length of the roll for easy identification by code officials. The tape identifies the manufacturer and ASTM Testing: Reflectix® Duct Insulation · ASTM E84 · Class A / Class 1 · ASTM C411 Passed

BENEFITS

- Non-toxic / non-carcinogenic
- Fiber-free
- Lowers heating / cooling costs year-round
- Reflects 96% radiant heat
- Costs less to install
- Lightweight and clean
- Not affected by moisture / humidity
- Does not promote nesting of insects or rodents
- Resists growth of fungi, mold and mildew
- Does not require protective clothing or respirators to install
- ISO 9001:2015 Certified Manufacturing Location

REFLECTIX® DUCT INSULATION PART NUMBERS AND STOCK SIZES

- HVBP12050 (12″x 50′)
- HVBP16050 (16″x 50′)
- HVBP24050 (24″x 50′)
- HVBP36050 (36″x 50′)
- HVBP48050 (48″x 50′)
- HVBP60050 (60″x 50′)
- HVBP12100 (12″x 100′)
- HVBP16100 (16″x 100′)
- HVBP24100 (24″x 100′)
- HVBP36100 (36″x 100′)
- HVBP48100 (48″x 100′)
- HVBP60100 (60″x 100′)
- HVBP12125 (12″x 125′)
- HVBP16125 (16″x 125′)
- HVBP24125 (24″x 125′)
- HVBP36125 (36″x 125′)
- HVBP48125 (48″x 125′)
- HVBP60125 (60″x 125′)

APPLICATIONS

Rectangular and Round return and supply ductwork in HVAC systems

Features
AT A GLANCE:

Reflectix® Duct Insulation may be installed by wrapping rectangular or round ductwork in HVAC applications

---

Heating costs can be greatly reduced

Eliminate unnecessary heat loss/gain and air leakage

Helps to ensure consistent temperatures

WAREHOUSE LOCATIONS:

Markleville, IN · Phoenix, AZ
Greenville, SC · Needham, MA

Reflectix, Inc.
A Division of Balcan Innovations Inc.
#1 School St. (PO Box 108)
Markleville, IN 46056
(800) 879-3645
Fax: (765) 533-2327
www.reflectixinc.com

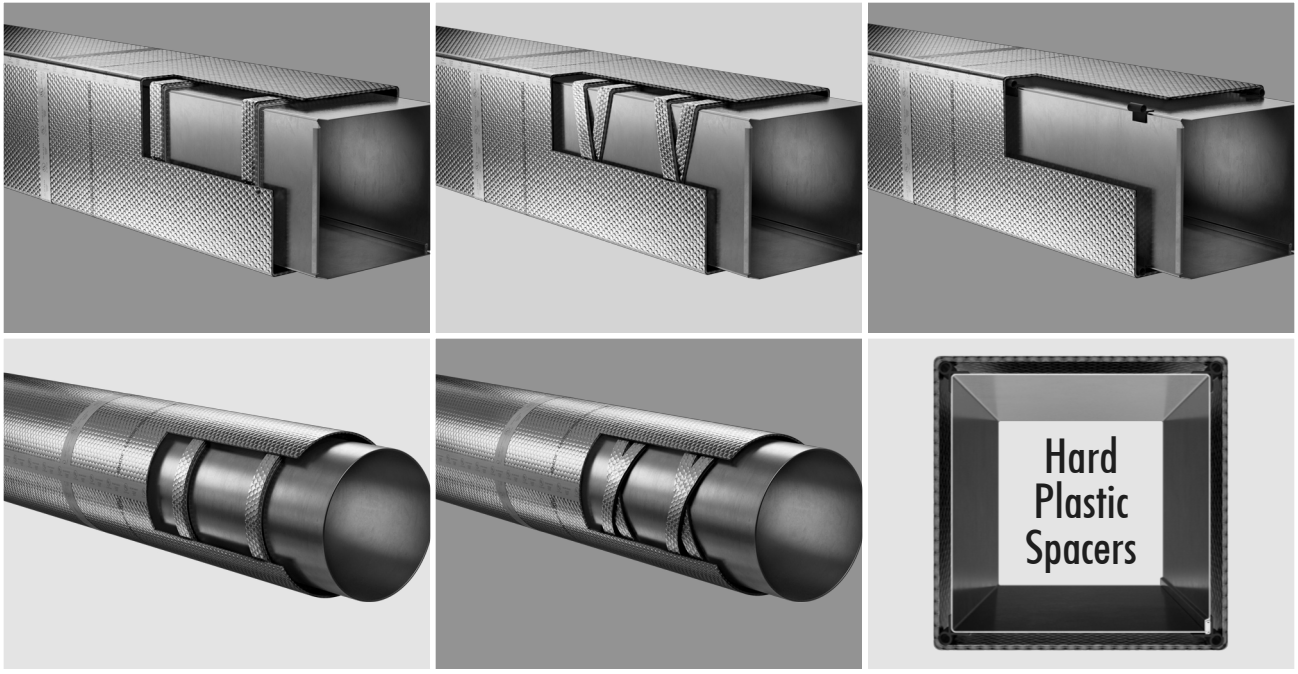

DOUBLE REFLECTIVE TECHNICAL DATA

Temperature Range:	-30° to +180° F
Nominal Thickness:	5/16 inch (.312)
Weight:	0.771 oz./sq. ft.
Flame Spread Index (ASTM E 84):	Less than 25
Smoke Developed Index (ASTM E 84):	Less than 50
Mounting Method (ASTM E 2599)	
Fire Rating:	Class A/Class 1
Linear Shrinkage:	None
Reflectance (IR):	96%
Water Vapor Transmission (ASTM E 96):	0.02
Puncture Resistance:	60 lb./in.
Mold and Mildew:	No Growth
Emittance:	0.04
Tensile Strength:	3.7 N/mm
Pliability:	No Cracking
Hot Surface Performance:	Passed (250° F)

Note: Not for use in direct contact on surface temperatures that are 180° F or greater.

TESTING & CERTIFICATIONS

- Thermal Performance ASTM C335
- Hot Surface Performance ASTM C411
- Flame Spread and Smoke Density ASTM E84
- Fungus Resistance Mil-Std 810B Method 508
- Pliability Test ASTM C1224
- Sound Absorption Test ASTM C423 and ASTM E795
- Sound Transmission Loss ASTM E90 and ASTM E413
- Water Vapor Transmission ASTM E96
- Tensile Strength ASTM D751
- Bleeding and Delamination ASTM C1668
- Intertek: Surface Burning Characteristics of Building Materials ASTM E84-08 (Taped Joint Detail) Test Report # 3166908SAT-012
- Intertek: Surface Burning Characteristics of Building Materials ASTM E84-08 (Unslit) Test Report # 3166908SAT-011
- R&D Services: Resistance to the Growth of Fungi ASTM C1338-00 Test Report # RD072713FR
- State of California
- State of California Licensed Insulation Manufacturer
- State of Minnesota: Filed with Minnesota Insulation Standards Program
- R&D Services Emittance Testing ASTM C1371
- R&D Services: Physical Properties Sheet Width, Length, Pliability, Water Vapor Permanence and Aged Water Vapor Permanence
- R&D Services: Water Vapor Transmission Test ASTM-E96 (Dessicant Method)

MANUFACTURER'S SUGGESTED INSTALLATION INSTRUCTIONS

THERE ARE 3 OPTIONS - METHODS 1 & 2 ARE APPLICABLE TO EITHER ROUND OR RECTANGULAR DUCTS:

NOTE: Installation instructions and illustrated drawings are recommendations only,
while proper local construction methods are the responsibility of the installer.

1. SPACER PERPENDICULAR TO DUCT DIRECTION METHOD

SPACER: HVSPW02025 - REFLECTIX® SPIRAL PIPE WRAP 2"x 25'

- Refer to the two left hand diagrams on page 2.
- Make sure all sheet metal joints, seams and penetrations are sealed.
- Double wrap and secure spacer material to the duct at 24" to 36" intervals. Use a UL181 Tape with Acrylic Adhesive to fasten the spacer in place.
- Verify the circumference of the duct at the mid-point of a spacer strip.
- Cut the Reflectix® product to this length plus 1".
- Wrap the product around the duct and securely tape the linear and circumference seams (overlapping 1"- 2") with a UL181 Tape with Acrylic Adhesive (goal is an air-tight, snug seam seal).
- Do not leave any exposed duct or space where air can enter between the duct and the Reflectix®.

2. SPACER WRAPPED IN CANDY CANE FASHION METHOD

SPACER: HVSPW02025 - REFLECTIX® SPIRAL PIPE WRAP 2"x 25'

- Refer to the two center diagrams on page 2.
- Make sure all sheet metal joints, seams and penetrations are sealed.
- Double wrap and secure spacer material to the duct in a candy cane fashion. First, proceed down the duct in one direction then reverse direction and crisscross (overlap) the spacer in the other direction. Use a UL181 Tape with Acrylic Adhesive to fasten the spacer in place.
- Verify the circumference of the duct with the spacer strips in place.
- Cut the Reflectix® product to this length plus 1".
- Wrap the product around the duct and securely tape the linear and circumference seams (overlapping 1"- 2") with a UL181 Tape with Acrylic Adhesive (goal is an air-tight, snug seam seal).
- Do not leave any exposed duct or space where air can enter between the duct and the Reflectix®.

3. HV SPACERS AFFIXED TO CORNERS METHOD (RECTANGULAR DUCTS ONLY)

SPACER: HVSPACER - REFLECTIX® HARD PLASTIC CORNER SPACER

- Refer to the two right hand diagrams on page 2.
- Make sure all sheet metal joints, seams and penetrations are sealed.
- Make sure the duct is free from dust and dirt by wiping it down with a shop rag.
- Install the HV Spacers to all 4 corners of the duct.
- Place the spacers every 24".
- Verify the circumference of the duct over the top of the spacers.
- Cut the Reflectix® product to this length plus 1".
- Wrap the Reflectix® over the spacers.
- Fasten the Reflectix® by either taping the seam with a UL181 Tape with Acrylic Adhesive, or plier stapling the two edges together (goal is an airtight, snug seam seal).
- If the duct is supported with saddle clamps, make sure to install a spacer on the two bottom edges of the duct directly between the clamp and the duct.
- If the clamps are installed around the duct (such as plumbers tape), make sure that the seam is taped to prevent air movement.

PLEASE NOTE REGARDING HANGERS:

Strap Hanger: Wrap Reflectix® with the seam at the hanger. Tape seam tightly around hanger.

Saddle Hanger: Make sure that there is a spacer below the hanger between the insulation and the duct to prevent the insulation from touching the duct.

NOTE: Not to be used as duct liner.