Cush-A-Block®
Rooftop Support System

75% Faster Strut Install and Change-Out

Built-in Channel Guide

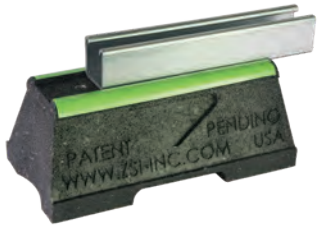

Straight Strut Installation

Embedded Fasteners

No Rust on the Roof

Easy-carry Hand Grip

Simple to Lift and Carry

Water Flow-through

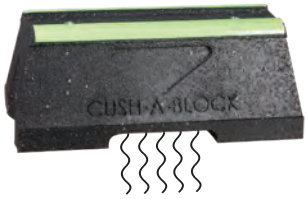

Helps Prevent Mold & Ice Dams

- 100% Recycled Rubber Qualifies for LEED Credits
- Meets the Buy America Act and ARRA
- Resistant to Freeze and Thaw
- Dampens Vibrations
- Compatible with Most Rooftop Materials
- Eco-Green Reflective Safety Strip Won't Peel or Flake

Cush-A-Block is manufactured under U.S. patent D824749 and one pending, and Canadian patents #175942 and one pending

CUSH-A-BLOCK - CBN SERIES

SUPPORT WITH METAL CHANNEL

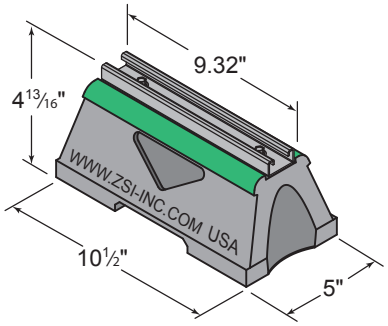

Strut lengths up to 46.82".
Custom lengths are available upon request

Part No.	No. of Bases	Height	Strut Length	Total Length	Weight (Lbs)	Uniform Load Capacity (Lbs) *
CBN-Support With 13/16" Pre-Galv. Steel Channel						
CBN1S	1	4-13/16"	9.32"	10-½"	4.0	2,500 *
CBN2S	2		22.82"	24"	8.4	5,000 *
CBN3S	3		34.82"	36"	12.6	7,500 *
CBN4S	4		46.82"	48"	16.9	10,000 *
CBN-Support With 1-5/8" Pre-Galv. Steel Channel						
CBN1D	1	5-5/8"	9.32"	10-½"	4.7	2,500 *
CBN2D	2		22.82"	24"	9.9	5,000 *
CBN3D	3		34.82"	36"	15.0	7,500 *
CBN4D	4		46.82"	48"	20.0	10,000 *
CBN Support With 2-7/16" Pre-Galv. Steel Channel						
CBN1RD	1	6-7/16"	9.32"	10-½"	5.1	2,500 *
CBN2RD	2		22.82"	24"	10.9	5,000 *
CBN3RD	3		34.82"	36"	16.6	7,500 *
CBN4RD	4		46.82"	48"	22.2	10,000 *

* This load is only for the capacity of the components in this assembly.
Please consult roofing manufacturer or engineer for roof load capacity.

Solar Racking | Pipe & Conduit | HVAC | Rooftop Walkways

Call ZSi-Foster at **(800) 323-7053** or order now at ZSi-Foster.com

Cush-A-Block®
Rooftop Support System

CUSH-A-BLOCK - CBN SERIES

PLAIN BASE

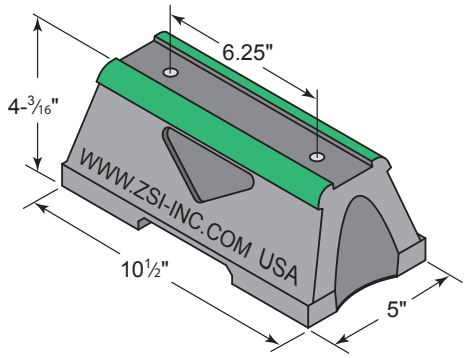

CBN-Base Series		
Part No.	Weight	Uniform Load Capacity (Lbs) *
CBN	3.2 lbs.	2,500 *

* This load is only for the capacity of the components in this assembly. Please consult roofing manufacturer or engineer for roof load capacity.

CUSH-A-BLOCK MINI - CBM SERIES

PLAIN BASE

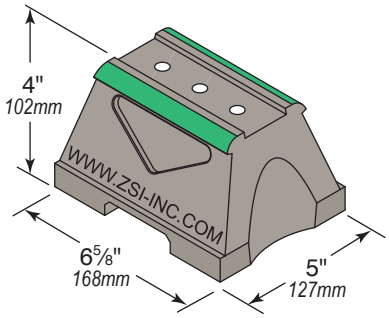

Part No.	Weight	Uniform Load Capacity (Lbs) *
CBM	1.0 lbs. *(0.45 Kg)*	400 *(11.78 kN)*

* This load is only for the capacity of the components in this assembly. Please consult roofing manufacturer or engineer for roof load capacity.

CUSH-A-BLOCK MINI WITH RAISED CUSH-A-RING

Support With Raised SPH Cush-A-Ring Clamp for Copper Tube or Steel Tube or Pipe

Support With Raised SPP Cush-A-Ring Clamp for PEX, CPVC, or PVC Pipe

CUSH-A-BLOCK MINI - CBM SERIES

SUPPORT WITH METAL CHANNEL

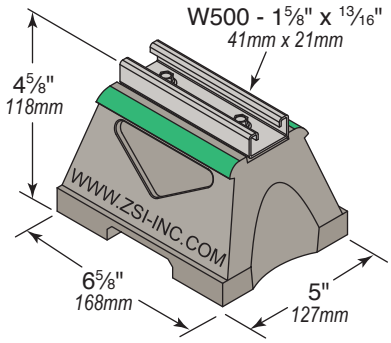

Part No.	Weight (Lbs)	Uniform Load Capacity (Lbs) *
CBM-Support With 13/16" Pre-Galv. Steel Channel		
CBM1S	2.11 *(0.96Kg)*	400 *(11.78 kN)*
CBM-Support With 1-⅝" Pre-Galv. Steel Channel		
CBM1D	2.14 *(0.97Kg)*	400 *(11.78 kN)*

* This load is only for the capacity of the components in this assembly. Please consult roofing manufacturer or engineer for roof load capacity.

Call ZSi-Foster at **(800) 323-7053** or order now at ZSi-Foster.com

ZSi-Foster

Springfield, MO | Canton, MI | La Mirada, CA