Streamline®
Tube • Fittings • Valves

COPPER TUBE FOR HVACR APPLICATIONS

Job Name _____ **Contractor** _____

Job Location _____ **Wholesaler** _____

Engineer _____ **Streamline® Rep** _____

Product Description:

Streamline® Service Coils, ACR/Nitrogenized straight-length or line set copper tube for use in refrigeration applications. Available sizes ranging from 1/8" to 8-1/8" in outside diameter. All tube should be manufactured in the United States.

Material:

Streamline® Copper Tube is manufactured from UNS C12200 grade of copper.

Key Specifications:

Streamline® Copper Refrigeration Service Coils, ACR/Nitrogenized straight lengths and line sets are made to meet the chemical, mechanical, cleanness, and eddy current testing requirements of the applicable specification of ASTM B280. Streamline® copper tube is third party verified in select sizes[1] through Underwriters Laboratories (UL) for operating pressure of 700psi at 250°F.

Installation:

Installations shall comply with the latest applicable building codes for the local jurisdiction. For detailed installation instructions, consult the Copper Development Association at copper.org.

References:

1

Product Line	Product Type	Outer Diameter
Copper Tube C UL US 700 PSI R410A	Streamline® Refrigeration Service Coils Streamline® Line Sets & Mini-Splits Streamline® ACR - Type L (Hard Lengths) Streamline® ACR - Type K (Hard Lengths)	1/8" – 1-1/8" 1/8" – 1-1/8" 1/8" – 1-3/8" 1/8" – 2-5/8"

C12200	99.9% Pure Copper
ASTM B280	Seamless Copper Tube for Air Conditioning and Refrigeration

MADE IN USA

A BRAND OF MUELLER INDUSTRIES

COPPER TUBE DATA

REFRIGERATION SERVICE TUBE

STREAMLINE® dehydrated and nitrogen purged and sealed copper tube is of a consistent annealed temper, bright and thoroughly dried and packaged in individual cartons. Each carton is clearly labeled showing size and length.

Tube is manufactured in accordance with ASTM B280 and ANSI B9.1, refrigeration industry standards. For special lengths and sizes not listed please consult your local Mueller Streamline representative.

COILS

SIZE	RATED INTERNAL WORKING PRESSURE (PSIG)				50 FEET		SHIP INFO	100 FOOT	
O.D.	150°F	200°F	350°F	400°F	COIL DIA	WT/COIL	COIL/MSTR	COL DIA	WT/COIL
1/8	2613	2459	2049	1537	10 3/4	1.74	10	17	3.48
3/16	1645	1548	1290	968	11 3/4	2.88	10	18 5/8	5.76
1/4	1195	1125	938	703	13 1/2	4.02	10	18 5/8	8.04
5/16	1017	957	798	598	15 1/2	5.45	10	19 7/8	10.90
3/8	836	787	656	492	17	6.70	10	21 7/8	13.40
1/2	700 †	700 †	485	363	19 7/8	9.10	5	25	18.20
5/8	700 †	700 †	412	309	21 1/4	12.55	5	25 1/4	25.10
3/4	700 †	700 †	341	256	23 1/4	15.25	3	29	30.50
7/8	700 †	700 †	388	291	27 1/4	22.75	3	32 1/4	45.50
1 1/8	700 †	700 †	330	247	34 1/2	32.75	-	38 1/2	65.50
1 3/8	625	625	293	219	45	44.20	-	45	88.40
1 5/8	625	625	272	204	45	57.00	-	49	114.00

† UL Recognized to 700 PSI (select sizes)

TECHNICAL DATA

All ratings listed for types K, L, M, DWV and refrigeration service tube in the preceding charts are calculated for tube in the annealed condition. These values should be used when soldering, brazing or welding is employed for joining components in a system. While the ratings for hard drawn tube are substantially higher, they should only be used for systems using properly designed flare or compression mechanical joints, since joining by any heating process might anneal (soften) the tube.

In designing a system, careful consideration should also be given to joint ratings as well as those of the components.

We believe HVACR connections should be made by brazing (using filler metals that melt above 800°F), which is primarily because solder alloys may not be suitable to high vibration and aggressive thermal-cycling environments.

Streamline® copper tube meets many HVACR codes including, but not limited to:
ASME B31.5
ASHRAE 15

SOLUTIONS FOR ENERGY SAVINGS

AP ArmaFlex®

Black and White Tube Insulation

The original, fiber-free, flexible elastomeric pipe insulation for reliable protection against condensation and energy loss.

// Fiber-free, formaldehyde-free, low VOC and non-particulating formulation protects indoor air quality
// Closed-cell structure provides excellent condensation control
// Built-in vapor retarder eliminates need for additional vapor retarder
// Rated 25/50 for use in return air plenums

www.armacell.us

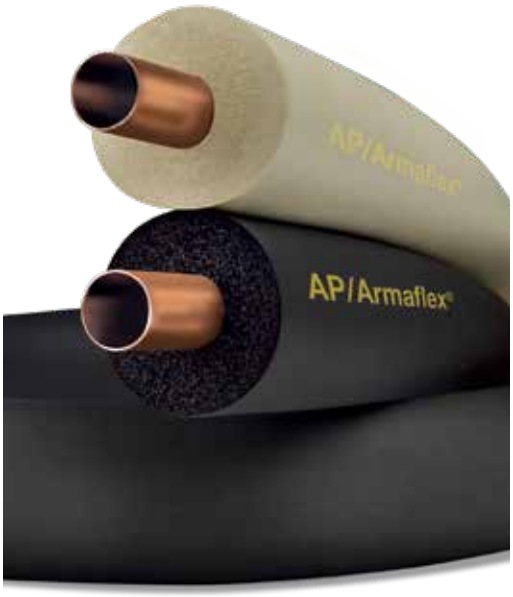

armacell®
ArmaFlex®

TECHNICAL DATA – AP ArmaFlex® BLACK AND WHITE TUBE INSULATION

refrigeration pipe insulation

Description

Black or off-white flexible closed-cell elastomeric thermal insulation in a tubular form

Applications

Insulation for piping associated with HVAC, VRV and VRF systems, chillers, hot and cold water, refrigeration

Specification Compliance

ASTM C 534, Type I – Grade 1 ASTM D 1056, 2C1 ASTM E 84, UL723	ASTM G21/C1338 CAN/ULC S102 ① City of New York Approval MEA 107-89M	MIL-P-15280J, FORM T (black product only) ② NFPA 90A, 90B	UL 181 UL 94 5V-A, V-0, File E55798 (black product only)

Approvals, Certifications, Compliances

- 3rd party certified by FM Approvals through 1-1/2" wall thickness per FM 4924
- GREENGUARD® Children & Schools Indoor Air Quality certified.
- Manufactured without CFCs, HFCs, HCFCs, PBDEs, or Formaldehyde.
- Made with EPA registered Microban® antimicrobial product protection.
- All Armacell facilities in North America are ISO 9001 certified.
- Plenum Rated
- Conforms to ASHRAE 90.1 Energy Standards
- Conforms to building codes: International Mechanical Code, IMC, International Energy Conservation Code, IECC, International Residential Code, IRC, Title 24 California Building Energy Efficiency Standards.

Typical Properties

Specifications	Values		Test Method
	3/8" through 1" Walls (NBR/PVC based)	**1-1/2" and 2" Walls** (EPDM based)	
Thermal Conductivity: Btu • in/h • ft2 • °F (W/mK)			
50°F Mean Temperature (10°C) 75°F Mean Temperature (24°C) 100°F Mean Temperature (38°C) 125°F Mean Temperature (52°C)	0.235 (0.034) 0.245 (0.0353) 0.257 (0.037) 0.268 (0.039)	0.278 (0.040) 0.28 (0.040) 0.289 (0.041) 0.300 (0.043)	ASTM C 177 or C 518
Water Vapor Permeability: Perm-in. [Kg/(s • m • Pa)]	0.05 (0.725 x 10^{-13})	0.08 (1.16 x 10^{-13})	ASTM E 96, Procedure A
Flame Spread and Smoke Developed Index:	25/50 rated	25/50 rated	ASTM E 84, UL 723 CAN/ULC S102 ①
Water Absorption, % by Volume:	0.2 %	0.2 %	ASTM C 209 or ASTM C1763
Mold Growth: **Fungi Resistance:**	Passed	Passed	UL181 ASTM G21/C1338
Maximum Service Temperature	220°F (105°C) ③	300°F (149°C) ④	ASTM C534
Minimum Service Temperature ⑤	-297°F (-183°C) ⑥	-297°F (-183°C) ⑥	ASTM C534

Sizes

Wall Thickness (nominal)	3/8", 1/2", 3/4", 1", 1-1/2", 2" (10, 13, 19, 25, 38, 50 mm)
Inside Diameter, Tubular	1/4" (black product only) ID to 10"ID (6 mm ID to 250 mm ID)
Length of Sections, Feet, Tubular	6' (1.8 m) (Some larger sizes may be shipped in two 3' sections)

Outdoor Use	Painting with WB Finish or other protective jacketing is required to prevent damage to the insulation in exterior applications and to comply with the insulation protection sections of the International Energy Conservation Code (IECC) and ASHRAE 90.1.

① AP ArmaFlex meets CAN/ULC S102 through 1" wall. AP ArmaFlex Black tested. AP ArmaFlex White determined to be comparable through 1" wall.
② AP ArmaFlex meets MIL-P-15280J through 1" wall.
③ AP ArmaFlex Pipe Insulation can withstand temperatures as high as 250°F for 96 hour time periods when tested according to ASTM C411 - Standard Test Method for Hot-Surface Performance of High-Temperature Thermal Insulation.
④ 1-1/2" and 2" AP ArmaFlex tubes are formulated with EPDM rubber giving them a higher upper use temperature than AP ArmaFlex tubes less than 1-1/2" wall thickness.
⑤ At temperatures below -20°F (-29°C), elastomeric insulation starts to become less flexible. However, this characteristic does not affect thermal efficiency and resistance to water vapor permeability of ArmaFlex insulation.
⑥ For applications of -40°F to -297°F (-40°C to -183°C), contact Armacell.

GREENGUARD Certified products are certified to GREENGUARD standards for low chemical emissions into indoor air during product usage. For more information, visit ul.com/gg.

Microban antimicrobial product protection is limited to the product itself and is not designed to protect the users of these products from disease causing microorganisms, or as a substitute for normal cleaning and hygiene practices. Microban International, Ltd. makes neither direct nor implied health claims for the products containing Microban® antimicrobial product protection. Data, photomicrographs and information presented are based on standard laboratory tests and are provided for comparative purposes to substantiate antimicrobial activity for non-public health uses. Microban is a registered trademark of Microban International, Ltd.

AP ArmaFlex BLACK TUBES - R VALUES

3/8" WALLS	Nominal Copper or IPS Size	R-Value
IPAPT01438	3/16" Copper	2.8
IPAPT03838	1/4" Copper	2.8
IPAPT01238	3/8" Copper	2.6
IPAPT05838	1/2" Copper	2.6
IPAPT03438	5/8" Copper	2.4
IPAPT07838	3/4" Copper	2.4
IPAPT11838	1" Copper	2.3
IPAPT13838	1-1/4" Copper	2.2
IPAPT15838	1-1/2" Copper	2.5
IPAPT11038	1-1/2" IPS	2.4
IPAPT21838	2" Copper	2.4
IPAPT20038	2" IPS	2.4
IPAPT25838	2-1/2" Copper	2.4
IPAPT21038	2-1/2" IPS	2.4
IPAPT31838	3" Copper	2.4
IPAPT30038	3" IPS	2.3

1/2" WALLS	Nominal Copper or IPS Size	R-Value
IPAPT01412	3/16" Copper	3.8
IPAPT03812	1/4" Copper	3.3
IPAPT01212	3/8" Copper	3.3
IPAPT05812	1/2" Copper	3.4
IPAPT03412	5/8" Copper	3.3
IPAPT07812	3/4" Copper	3.3
IPAPT11812	1" Copper	3.3
IPAPT13812	1-1/4" Copper	3.2
IPAPT15812	1-1/2" Copper	3.2
IPAPT11012	1-1/2" IPS	3.1
IPAPT21812	2" Copper	3.2
IPAPT20012	2" IPS	3.2
IPAPT25812	2-1/2" Copper	3.2
IPAPT21012	2-1/2" IPS	3.2
IPAPT31812	3" Copper	3.2
IPAPT30012	3" IPS	3.1
IPAPT35812	3-1/2" Copper	3.1
IPAPT41812R	4" Copper	3.1
IPAPT40012R	4" IPS	3.0
IPAPT50012R	5" IPS	3.0
IPAPT60012R	6" IPS	3.0
IPAPT80012R	8" IPS	2.9

3/4" WALLS	Nominal Copper or IPS Size	R-Value
IPAPT01434	3/16" Copper	6.4
IPAPT03834	1/4" Copper	5.9
IPAPT01234	3/8" Copper	5.5
IPAPT05834	1/2" Copper	5.6
IPAPT03434	5/8" Copper	5.5
IPAPT07834	3/4" Copper	5.4
IPAPT11834	1" Copper	5.4
IPAPT13834	1-1/4" Copper	5.3
IPAPT15834	1-1/2" Copper	5.1
IPAPT11034	1-1/2" IPS	4.9
IPAPT21834	2" Copper	4.8
IPAPT20034	2" IPS	5.2
IPAPT25834	2-1/2" Copper	4.7
IPAPT21034	2-1/2" IPS	5.0

3/4" WALLS (continued)	Nominal Copper or IPS Size	R-Value
IPAPT31834	3" Copper	4.6
IPAPT30034	3" IPS	4.9
IPAPT35834	3-1/2" Copper	4.5
IPAPT41834R	4" Copper	4.5
IPAPT40034R	4" IPS	4.8
IPAPT50034R	5" IPS	4.7
IPAPT60034R	6" IPS	4.6
IPAPT80034R	8" IPS	4.5

1" WALLS	Nominal Copper or IPS Size	R-Value
IPAPT01410	3/16" Copper	8.3
IPAPT03810	1/4" Copper	7.3
IPAPT01210	3/8" Copper	7.2
IPAPT05810	1/2" Copper	7.2
IPAPT03410	5/8" Copper	7.0
IPAPT07810	3/4" Copper	7.0
IPAPT11810	1" Copper	7.2
IPAPT13810	1-1/4" Copper	7.2
IPAPT15810	1-1/2" Copper	7.2
IPAPT11010	1-1/2" IPS	6.9
IPAPT21810	2" Copper	6.8
IPAPT20010	2" IPS	7.1
IPAPT25810	2-1/2" Copper	6.5
IPAPT21010	2-1/2" IPS	6.8
IPAPT31810	3" Copper	6.3
IPAPT30010	3" IPS	6.6
IPAPT35810	3-1/2" Copper	6.2
IPAPT41810R	4" Copper	6.1
IPAPT40010R	4" IPS	6.4
IPAPT50010R	5" IPS	6.2
IPAPT60010R	6" IPS	6.1
IPAPT80010R	8" IPS	5.9
IPAPT10010R	10" IPS	5.8

1-1/2" WALLS	Nominal Copper or IPS Size	R-Value
IPAPT03815	1/4" Copper	13.7
IPAPT01215	3/8" Copper	12.7
IPAPT05815	1/2" Copper	12.0
IPAPT03415	5/8" Copper	11.3
IPAPT07815	3/4" Copper	10.8
IPAPT11815	1" Copper	10.1
IPAPT13815	1-1/4" Copper	9.6
IPAPT15815	1-1/2" Copper	9.2
IPAPT11015	1-1/2" IPS	8.7
IPAPT21815	2" Copper	8.6
IPAPT20015	2" IPS	8.8
IPAPT25815	2-1/2" Copper	8.2
IPAPT21015	2-1/2" IPS	8.4
IPAPT31815	3" Copper	7.9
IPAPT30015	3" IPS	8.1
IPAPT35815	3-1/2" Copper	7.7
IPAPT41815R	4" Copper	7.5
IPAPT40015R	4" IPS	7.8
IPAPT50015R	5" IPS	7.5
IPAPT61815R	6" Copper	7.4
IPAPT60015R	6" IPS	7.3

1-1/2" WALLS (continued)	Nominal Copper or IPS Size	R-Value
IPAPT80015R	8" IPS	7.0
IPAPT10015R	10" IPS	6.8

2" WALLS	Nominal Copper or IPS Size	R-Value
IPAPT03820	1/4" Copper	19.7
IPAPT01220	3/8" Copper	18.2
IPAPT05820	1/2" Copper	17.2
IPAPT03420	5/8" Copper	16.2
IPAPT07820	3/4" Copper	15.5
IPAPT11820	1" Copper	14.5
IPAPT13820	1-1/4" Copper	13.7
IPAPT15820	1-1/2" Copper	13.1
IPAPT11020	1-1/2" IPS	12.4
IPAPT21820	2" Copper	12.2
IPAPT20020	2" IPS	12.3
IPAPT25820	2-1/2" Copper	11.6
IPAPT21020	2-1/2" IPS	11.7
IPAPT31820	3" Copper	11.1
IPAPT30020	3" IPS	11.2
IPAPT35820	3-1/2" Copper	10.7
IPAPT41820R	4" Copper	10.5
IPAPT40020R	4" IPS	10.7
IPAPT50020R	5" IPS	10.2
IPAPT60020R	6" IPS	9.9
IPAPT80020R	8" IPS	9.5
IPAPT10020R	10" IPS	9.2

*These specifications are based on the measurement methods employed by Armacell. Other methods may not result in the same values and cannot be used to determine if the product is within the given tolerance.

SOLUTIONS FOR ENERGY SAVINGS

ArmaFlex®

520 Adhesive

An air-drying contact adhesive that is excellent for joining seams and butt joints of ArmaFlex Pipe and Sheet Insulations

// Formulated for ArmaFlex Insulations
// Air-drying contact adhesive
// Years of on-the-job performance
// Meets MIL-A-24179A and Amend-2

www.armacell.us

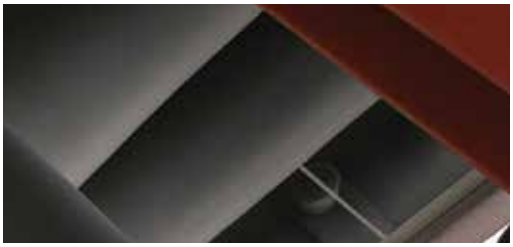

armacell®
ArmaFlex®

Description

An air-drying contact adhesive that is excellent for joining seams and butt joints of ArmaFlex Pipe and Sheet Insulations

Specification Compliance

MIL-A-24179A Type II, Class 1	ASTM G21/C1338

Approvals, Certifications, Compliances

- All Armacell facilities in North America are ISO 9001 certified.

Typical Properties

Specifications	Values	
Color	Greenish yellow	
Net Weight	6.9 pounds per gallon (828 g/l)	
Composition	Synthetic rubber base with synthetic resins and fillers added; hydrocarbon- and ketone-type solvents.	
Volatile Organic Compounds (VOC) Content	615 g/l	
Solids Content	Approximately 19% by weight	
Coverage	200 sq ft (5 m^2/l) per gallon max, single coat (depending upon porosity of materials bonded and air temperature)	
Shelf Life	1-1/2 years in original sealed container; Store in a well ventilated area with storage temperature 60° F to 80° F (16° C to 27° C).	
Temperature Limits	250°F (120°C) — ArmaFlex Pipe Insulation seams and joints 180°F (82°C) — Full bonding sheet insulation	
Tack Time	1–5 minutes depending on ambient conditions	
Bond Time	Immediate	
Full Cure Time	36 hours	
Container Sizes	Half-pint and pint brush-top cans and pint, quart, and gallon containers	
Wet Flash Point	Below 20°F (-7°C) (TOC)	
Flame Spread and Smoke Developed Index	25/50 rated	ASTM E 84
Minimum Application Temperature	40°F (4°C)	

All data and technical information are based on results achieved under typical application conditions. It is the customer's responsibility to verify if the product is suitable for the intended application. The responsibility for professional and correct installation and compliance with relevant building regulations lies with the customer. By ordering/receiving product you accept the **Armacell General Terms and Conditions of Sale** applicable in the region. Please request a copy if you have not received these.

© Armacell, 2020. ArmaFlex is a trademark of the Armacell Group

ArmaFlex | 520 Adhesive TDS | 082020 | NA| EN-A | 083

ABOUT ARMACELL

As the inventors of flexible foam for equipment insulation and a leading provider of engineered foams, Armacell develops innovative and safe thermal, acoustic and mechanical solutions that create sustainable value for its customers. Armacell's products significantly contribute to global energy efficiency making a difference around the world every day. With 3100 employees and 24 production plants in 16 countries, the company operates two main businesses, Advanced Insulation and Engineered Foams. Armacell focuses on insulation materials for technical equipment, high-performance foams for high-tech and lightweight applications and next generation aerogel blanket technology.

For more information, please visit:
www.armacell.us
800-866-5638

armacell®
ArmaFlex®

SOLUTIONS FOR ENERGY SAVINGS

AP ArmaFlex®

Insulation Tape

The mold resistant, elastomeric, AP ArmaFlex pressure sensitive insulation tape that provides a fast, easy method of insulating pipes and fittings

// High-quality AP ArmaFlex insulation
// Fast on difficult pipes and fittings
// Controls condensation and heat loss
// Clean, smooth appearance

www.armacell.us

armacell®
ArmaFlex®

TECHNICAL DATA – AP ArmaFlex® INSULATION TAPE

Description

A black, closed cell, mold resistant, elastomeric thermal insulation tape for insulating pipes and fittings

Specification Compliance

ASTM C 534, Type II – Grade 1 ASTM E 84, UL723 CAN/ULC S102	NFPA 90A, 90B UL 181 ASTM G-21/C1338	ASTM D 1056, 2C1 Grade SBE 3 City of New York approval MEA 96-85-M

Approvals, Certifications, Compliances

- Manufactured without CFCs, HFCs, HCFCs, PBDEs, or Formaldehyde.
- Made with EPA registered Microban® antimicrobial product protection.
- All Armacell facilities in North America are ISO 9001 certified.

Typical Properties

Specifications	Values	Test Method
Thermal Conductivity: Btu • in/h • ft2 • °F (W/mK)		
75°F Mean Temperature (24°C) 100°F Mean Temperature (38°C)	0.25 (0.036) 0.257 (0.037)	ASTM C 177 or C 518
Water Vapor Permeability: Perm-in. [Kg/(s • m • Pa)]	0.05 (0.725 x 10^{-13})	ASTM E 96, Procedure A
Flame Spread and Smoke Developed Index:	25/50 rated	ASTM E 84, UL 723 CAN/ULC S102
Mold Growth: **Fungi Resistance:**	Pass Pass	UL181 ASTM G21/C1338
Maximum Service Temperature	Up to 180°F (82°C)	ASTM C534
Minimum Service Temperature	-30°F (-34°C)	ASTM C534

Microban antimicrobial product protection is limited to the product itself and is not designed to protect the users of these products from disease causing microorganisms, or as a substitute for normal cleaning and hygiene practices. Microban International, Ltd. makes neither direct nor implied health claims for the products containing Microban® antimicrobial product protection. Data, photomicrographs and information presented are based on standard laboratory tests and are provided for comparative purposes to substantiate antimicrobial activity for non-public health uses. Microban is a registered trademark of Microban International, Ltd.

All data and technical information are based on results achieved under typical application conditions. It is the customer's responsibility to verify if the product is suitable for the intended application. The responsibility for professional and correct installation and compliance with relevant building regulations lies with the customer. By ordering/receiving product you accept the **Armacell General Terms and Conditions of Sale** applicable in the region. Please request a copy if you have not received these.

© Armacell, 2020. AP ArmaFlex is a trademark of the Armacell Group

ABOUT ARMACELL

As the inventors of flexible foam for equipment insulation and a leading provider of engineered foams, Armacell develops innovative and safe thermal, acoustic and mechanical solutions that create sustainable value for its customers. Armacell's products significantly contribute to global energy efficiency making a difference around the world every day. With 3,100 employees and 24 production plants in 16 countries, the company operates two main businesses, Advanced Insulation and Engineered Foams. Armacell focuses on insulation materials for technical equipment, high-performance foams for high-tech and lightweight applications and next generation aerogel blanket technology.

For more information, please visit:
www.armacell.us
800-866-5638

armacell®
ArmaFlex®

PROTECTION INDOORS AND OUT

ArmaFlex WB Finish

ArmaFlex® WB Finish is the durable, white, protective finish formulated for use over all ArmaFlex insulations for protection against ultraviolet radiation, weather and ozone damage or where a clean, white aesthetic is desired.

// Suitable for both indoor and outdoor applications.
// Provides a clean, white, protective finish which guards against UV and ozone damage.
// Formulated for cold weather flexibility to resist cracking.
// Water-based, 100% acrylic is fast drying without solvent fumes. Cleans up with soap and water.
// Outdoor surfaces should be recoated every 2-4 years.

www.armacell.us

armacell®
ArmaFlex®

TECHNICAL DATA – ARMAFLEX® WB FINISH

Description

White, water-based, 100% acrylic coating

Typical Properties

Physical Properties	Value
Color:	Available in Standard White. Tinting possible for indoor use only. No tinting for outdoor applications.
Net Weight:	11.3 lbs. per gallon (1.35 kg/l)
Composition:	Pigmented latex V.O.C. Less than 50 g/l (calculated)
Solid Content:	Approximately 65% by weight and 53% by volume.
Viscosity:	95 - 120 KU
Application:	Brush or roller. Apply at temperatures above 50°F (10°C) and when no freezing temperatures are expected for 24 hours
Coverage:	200 - 400 sq. ft. (37 sq.m.) per gallon per single brush coat, depending on temperature and substrate.
Shelf Life:	One year in original sealed container. Storage temperature 60° to 80°F (16° to 27°C). **Keep from freezing.**
Minimum Drying Time:	Four hours minimum for application of second coat, at least 24 hours to dry completely
Container Sizes:	One-gallon or quart containers
Flammability:	Not flammable; water-based
Surface-Burning Characteristics:	Dry: ASTM E 84 Method Flame-Spread Index 0 Smoke Developed Index 0

Outdoor Pipe Insulation Finish Paint

All data and technical information are based on results achieved under typical application conditions. It is the customer's responsibility to verify if the product is suitable for the intended application. The responsibility for professional and correct installation and compliance with relevant building regulations lies with the customer. By ordering/receiving product you accept the **Armacell General Terms and Conditions of Sale** applicable in the region. Please request a copy if you have not received these.

© Armacell, 2019. ArmaFlex is a trademark of the Armacell Group

WB Finish | ArmaFlex | TDS | 112019 | NA | EN-A | 082

ABOUT ARMACELL

As the inventors of flexible foam for equipment insulation and a leading provider of engineered foams, Armacell develops innovative and safe thermal, acoustic and mechanical solutions that create sustainable value for its customers. Armacell's products significantly contribute to global energy efficiency making a difference around the world every day. With 3,100 employees and 24 production plants in 16 countries, the company operates two main businesses, Advanced Insulation and Engineered Foams. Armacell focuses on insulation materials for technical equipment, high-performance foams for high-tech and lightweight applications and next generation aerogel blanket technology.

For more information:
www.armacell.us
info.us@armacell.com
800-866-5638

armacell®
ArmaFlex®

Cush-A-Block®
Rooftop Support System

75% Faster Strut Install and Change-Out

Built-in Channel Guide

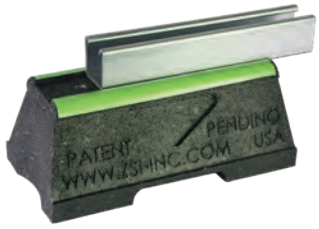

Straight Strut Installation

Embedded Fasteners

No Rust on the Roof

Easy-carry Hand Grip

Simple to Lift and Carry

Water Flow-through

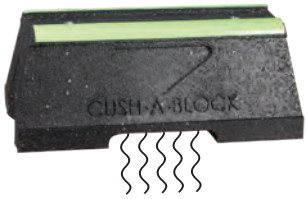

Helps Prevent Mold & Ice Dams

- 100% Recycled Rubber Qualifies for LEED Credits
- Meets the Buy America Act and ARRA
- Resistant to Freeze and Thaw
- Dampens Vibrations
- Compatible with Most Rooftop Materials
- Eco-Green Reflective Safety Strip Won't Peel or Flake

Cush-A-Block is manufactured under U.S. patent D824749 and one pending, and Canadian patents #175942 and one pending

CUSH-A-BLOCK - CBN SERIES

SUPPORT WITH METAL CHANNEL

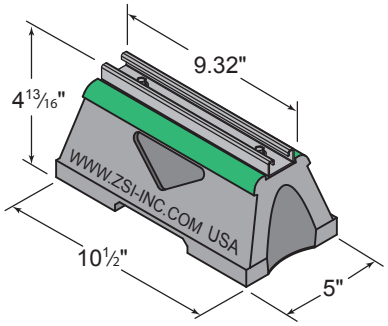

Strut lengths up to 46.82".
Custom lengths are available upon request

Part No.	No. of Bases	Height	Strut Length	Total Length	Weight (Lbs)	Uniform Load Capacity (Lbs) *
CBN-Support With 13/16" Pre-Galv. Steel Channel						
CBN1S	1	4-13/16"	9.32"	10-½"	4.0	2,500 *
CBN2S	2		22.82"	24"	8.4	5,000 *
CBN3S	3		34.82"	36"	12.6	7,500 *
CBN4S	4		46.82"	48"	16.9	10,000 *
CBN-Support With 1-5/8" Pre-Galv. Steel Channel						
CBN1D	1	5-5/8"	9.32"	10-½"	4.7	2,500 *
CBN2D	2		22.82"	24"	9.9	5,000 *
CBN3D	3		34.82"	36"	15.0	7,500 *
CBN4D	4		46.82"	48"	20.0	10,000 *
CBN Support With 2-7/16" Pre-Galv. Steel Channel						
CBN1RD	1	6-7/16"	9.32"	10-½"	5.1	2,500 *
CBN2RD	2		22.82"	24"	10.9	5,000 *
CBN3RD	3		34.82"	36"	16.6	7,500 *
CBN4RD	4		46.82"	48"	22.2	10,000 *

* This load is only for the capacity of the components in this assembly.
Please consult roofing manufacturer or engineer for roof load capacity.

Solar Racking | Pipe & Conduit | HVAC | Rooftop Walkways

Call ZSi-Foster at **(800) 323-7053** or order now at ZSi-Foster.com

Cush-A-Block®
Rooftop Support System

CUSH-A-BLOCK - CBN SERIES

PLAIN BASE

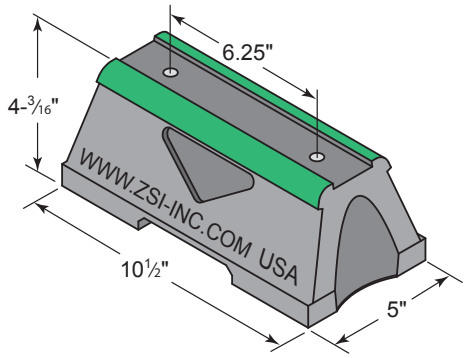

CBN-Base Series		
Part No.	Weight	Uniform Load Capacity (Lbs) *
CBN	3.2 lbs.	2,500 *

* This load is only for the capacity of the components in this assembly. Please consult roofing manufacturer or engineer for roof load capacity.

CUSH-A-BLOCK MINI - CBM SERIES

PLAIN BASE

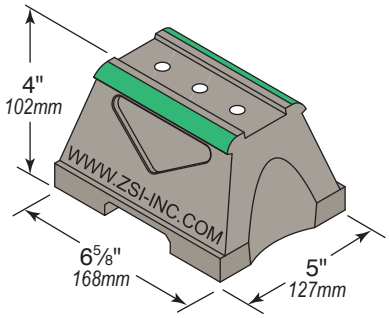

Part No.	Weight	Uniform Load Capacity (Lbs) *
CBM	1.0 lbs. *(0.45 Kg)*	400 *(11.78 kN)*

* This load is only for the capacity of the components in this assembly. Please consult roofing manufacturer or engineer for roof load capacity.

CUSH-A-BLOCK MINI WITH RAISED CUSH-A-RING

Support With Raised SPH Cush-A-Ring Clamp for Copper Tube or Steel Tube or Pipe

Support With Raised SPP Cush-A-Ring Clamp for PEX, CPVC, or PVC Pipe

CUSH-A-BLOCK MINI - CBM SERIES

SUPPORT WITH METAL CHANNEL

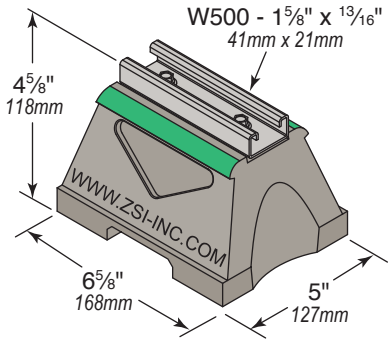

Part No.	Weight (Lbs)	Uniform Load Capacity (Lbs) *
CBM-Support With 13/16" Pre-Galv. Steel Channel		
CBM1S	2.11 *(0.96Kg)*	400 *(11.78 kN)*
CBM-Support With 1-⅝" Pre-Galv. Steel Channel		
CBM1D	2.14 *(0.97Kg)*	400 *(11.78 kN)*

* This load is only for the capacity of the components in this assembly. Please consult roofing manufacturer or engineer for roof load capacity.

Call ZSi-Foster at **(800) 323-7053** or order now at ZSi-Foster.com

ZSi-Foster

Springfield, MO | Canton, MI | La Mirada, CA

Johns Manville
A Berkshire Hathaway Company

MECHANICAL INSULATION

MICRO-LOK® *HP*

HIGH-PERFORMANCE FIBERGLASS PIPE INSULATION

DATA SHEET

condensation drain insulation

DESCRIPTION

Micro-Lok *HP* fiberglass pipe insulation is a high-performance insulation made from biosoluble glass fibers bonded with a thermosetting resin and produced in 36" (0.92 m) lengths. Micro-Lok *HP* insulation is used to insulate standard iron pipe, plastic pipe and copper tubing. The 3' (0.92 m) sections are available plain or with a factory-applied vapor-barrier jacket. The all-service (ASJ) vapor-retarder jacket includes a longitudinal, self-sealing closure lap. The jacket system is adhered to each fiberglass section using a specially formulated adhesive to ensure jacket securement.

The factory-installed tape system permits installation at ambient temperatures down to 20°F (-7°C) and will not soften or separate when exposed to high ambient temperatures and humidity.

USES

Micro-Lok *HP* fiberglass pipe insulation is suitable for installation over hot, cold, concealed and exposed piping systems with operating temperatures up to 850°F (454°C). Weather-protective jacketing is required for outdoor applications. Pipes operating below ambient temperatures require all joints to be sealed with the factory-applied, self-seal lap and butt strips. Micro-Lok HP is UL listed and labeled over plastic pipes for air plenum applications when used at 1.0" thickness or greater.

PHYSICAL PROPERTIES

Service Temp. Range (ASTM C411)	0°F to 850°F (-18°C to 454°C)
Moisture Sorption	<5% by weight
Corrosivity (ASTM C1617)	<5 ppm chloride standard
Shrinkage (ASTM C356)	None
Microbial Growth (ASTM C1338)	Does not promote microbial growth
Surface Burning Characteristics	Composite FHC 25/50 per ASTM E84, NFPA 255, CAN/ULC S102.2
Limited Combustibility	NFPA 90A and 90B
Jacketing	ASTM C1136 (Type I & II)
Water Vapor Permeance (ASTM E96 – Procedure A)	0.02 perms max.
Burst Strength (ASTM D774)	55 lbs/in^2 (4.6 Kg/cm^2)
Tensile Strength (ASTM D828)	45 lbs./in. (7.9N/mm) width min. (MD) 30 lbs./in. (5.23N/mm) width min. (CD)

SPECIFICATION COMPLIANCE

- ASTM C547 Type I (Replaces HH-I-558B, Form D, Type III, Class 12, Class 13 up to 850°F [454°C])
- ASTM C585 – Dimension Standard
- ASTM C1136 (Jacketing) (Replaces HH-B-100B, Type I & II)
- MIL-DTL-32585 Type 1, Form 4, Facing A (unjacketed only)
- MIL-I-22344D, MIL-PRF-22344E
- Coast Guard/IMO Approved 164.109/56/0 (plain, unjacketed only – excluding $^7/_8$ x ½ [22 mm x 13 mm], ½ x ½ [13 mm x 13 mm])
- Bureau of Household Goods and Services CA-T1039 (CO)
- Firestop Assemblies: Meets requirement for jacketed fiberglass pipe insulation product density at or above 3.5 pcf.
- ASTM E84, CAN ULC S102.2 – 25/50 listed and labeled Intertek testing laboratories, listed and labeled Underwriter Laboratories
- NRC 1.36, ASTM C795, MIL-I-24244C, MIL-DTL-24244D*

*When ordering material to comply with these specifications a statement of that fact must appear on the purchase order. Specific lot testing will be conducted and a certification of compliance can be provided.

Operating Temperature Limits: 0°F to 850°F (-18°C to 454°C)

THERMAL CONDUCTIVITY ("K") *

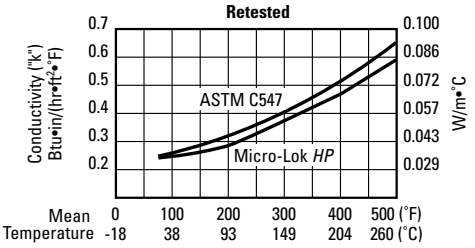

Mean Temperature	°F	75	100	200	300	400	500
	°C	24	38	93	149	204	260
Btu•in/(hr•ft²•°F)		0.23	0.24	0.28	0.34	0.44	0.55
W/m•°C		0.034	0.035	0.040	0.049	0.063	0.079

* Apparent thermal conductivity values are determined by applying procedures dictated per ASTM C1045 on test data obtained using ASTM Test Method C335. All values are based on nominal manufacturing and testing parameters, are subject to normal variation, and are not guaranteed for specification purposes or otherwise.

SUSTAINABLE BUILDING ATTRIBUTES

Manufacturing Location	Defiance, Ohio (43512)	
Recycled Content (glass only)	41%	
Recycled Content (total product)	28%	
Volatile Organic Compounds (ASTM D5116) (Analysis ASTM D6196 & ASTM D5197)	Total	0.22 g/l
Fiberglass Pipe Insulation	Formaldehyde Aldehydes	0.009 ppm 0.043 ppm
Volatile Organic Compounds (Calculated) Self-Sealing Lap & Butt Strips	Total	<49 g/l

SUSTAINABLE BUILDING CERTIFICATIONS

GREENGUARD® GREENGUARD® GOLD	Certified Certified
LEED® Credits LEED-NC	To see LEED info call technical support

GREENGUARD GOLD — PRODUCT CERTIFIED FOR LOW CHEMICAL EMISSIONS UL.COM/GG UL 2818

RECYCLED CONTENT — AVERAGE 32% RECYCLED CONTENT POST-CONSUMER

Intertek

CLASSIFIED — Insulated Plastic Pipe Assemblies (BSMP)

MICRO-LOK® *HP*

HIGH-PERFORMANCE FIBERGLASS PIPE INSULATION

DATA SHEET

SIZE AVAILABILITY

Insulation Thickness		Iron Pipe Size Range		Copper Tubing Size Range	
in.	mm	in.	mm	in.	mm
½	13	½–6	13–152	⅝–4⅛[§]	16–105
1	25	½–24	13–610	⅝–6⅛	16–156
1½	38	½–24	13–610	⅝–6⅛	16–156
2	51	½–24	13–610	1⅛–6⅛	29–156
2½	64	1–24	25–610	1⅜–6⅛	35–156
3	76	1–24	25–610	1⅜–6⅛	35–156
3½	89	1½–24[*]	38–610	–	–
4	102	3–24[**]	76–610	–	–
4½	114	3–24[†]	76–610	–	–
5	127	3–20[††]	76–508	–	–

Notes:

[*] *2½" and 23" IPS not available in this insulation thickness.*

[**] *22" and 23" IPS not available in this insulation thickness.*

[†] *21," 22" and 23" IPS not available in this insulation thickness.*

[††] *19" IPS not available in this insulation thickness.*

[§] *3⅝" CTS not available in this insulation thickness.*

ACOUSTIC - INSERTION LOSS

Insertion loss data for Johns Manville pipe insulation acoustic treatments tested per ASTM E1222

Frequency	1-in Micro-Lok HP	1-in Micro-Lok HP with Zeston PVC (20 mil)	1-in Micro-Lok HP with MLV (1 psf)	2-in Micro-Lok HP	2-in Micro-Lok HP with Zeston PVC (20 mil)	2-in Micro-Lok HP with MLV (1 psf)
Hz	dB	dB	dB	dB	dB	dB
315	2	1	10	1	0	12
400	2	4	13	0	8	17
500	3	5	14	1	10	19
630	5	11	21	6	14	21
800	7	13	20	8	15	22
1000	9	19	25	13	20	29
1250	10	20	28	14	22	31
1600	13	24	33	17	26	37
2000	15	27	35	20	29	39
2500	17	29	36	21	30	38
3150	19	30	36	23	32	40
4000	20	29	36	26	34	41
5000	22	30	36	29	34	38

ACOUSTIC - TRANSMISSION LOSS

Transmission loss data and sound transmission class (STC) for Johns Manville pipe insulation acoustic treatments tested per ASTM E90

Frequency	1-in Micro-Lok HP	1-in Micro-Lok HP with Zeston PVC (20 mil)	1-in Micro-Lok HP with MLV (1 psf)	2-in Micro-Lok HP	2-in Micro-Lok HP with Zeston PVC (20 mil)	2-in Micro-Lok HP with MLV (1 psf)
Hz	dB	dB	dB	dB	dB	dB
125	4	7	15	6	8	15
250	4	7	18	6	8	20
500	4	11	23	7	15	29
1000	7	19	32	12	25	38
2000	14	25	38	20	32	45
4000	21	29	44	30	38	51
STC	8	16	28	12	19	31

QUALIFICATIONS FOR USE

A sufficient thickness of insulation must be used to keep the maximum surface temperature of Micro-Lok *HP* insulation below 150°F (66°C). In addition, at operating temperatures above 500°F (260°C), Micro-Lok *HP* pipe insulation must be applied in a thickness ranging from 2" (51 mm) minimum to 6" (152 mm) maximum.

During initial heat-up to operating temperatures above 350°F (177°C), an acrid odor and some smoke may be given off as the organic binders used in the fiberglass pipe insulation begin to decompose. When this occurs, caution should be exercised to ventilate the area well. This loss of binder does not directly affect the thermal performance of the pipe insulation, but the compressive strength and resiliency of the product are reduced. For applications with excessive physical abuse or vibration at high temperatures, consult your local Insulation Systems Market Development Manager for alternate material recommendations.

CHILLED WATER SYSTEMS

For chilled water systems, see 3-Part Specification, MECH-261.

APPLICATION RECOMMENDATIONS*

MICRO-LOK *HP* PIPE INSULATION AND BUTT STRIPS

1. Do not apply Micro-Lok *HP* insulation if air temperature is below 20°F (-7°C) or above 130°F (54°C) due to the effect of temperature on tape performance. We recommend stapling when application falls outside this temperature range.

When stapling, we recommend mastic be applied over staples to prevent moisture penetration.

2. If stored below 20°F (-7°C) or above 130°F (54°C), insulation cartons should stand within the recommended temperature range for 24 hours prior to application.

3. Once release paper is removed, both adhesive and lap must be kept free of dirt and water, and the lap sealed immediately.

4. When adhered, the lap and butt strips must be pressurized by rubbing firmly with a plastic squeegee or the back of a knife blade to ensure positive closure.

**For complete application recommendations and installation instructions, see MECH-261 InsulSpec Specifications.*

Johns Manville
717 17th St.
Denver, CO 80202
800-654-3103
www.JM.com

North American Sales Offices, Insulation Systems

Eastern Region and Canada
P.O. Box 158
Defiance, OH 43512
800-334-2399
Fax: 419-784-7866

Western Region
P.O. Box 5108
Denver, CO 80217
800-368-4431
Fax: 303-978-4661

MECH-228 11/08/23 (Replaces 08/19/22)

Technical specifications as shown in this literature are intended to be used as general guidelines only. Please refer to the Safety Data Sheet and product label prior to using this product. The physical and chemical properties of Micro-Lok *HP* listed herein represent typical, average values obtained in accordance with accepted test methods and are subject to normal manufacturing variations. They are supplied as a technical service and are subject to change without notice. Any references to numerical flame spread or smoke developed ratings are not intended to reflect hazards presented by these or any other materials under actual fire conditions. Check with your customer service representative for current information.

All Johns Manville products are sold subject to Johns Manville's standard Terms and Conditions, which includes a Limited Warranty and Limitation of Remedy. For a copy of the Johns Manville standard Terms and Conditions or for information on other Johns Manville thermal insulation and systems, visit www.jm.com/terms-conditions or call (800) 654-3103.

© 2023 Johns Manville. All Rights Reserved.