MASON INDUSTRIES, Inc.

Manufacturers of Vibration Control Products

350 Rabro Drive
Hauppauge, NY 11788
631/348-0282
FAX 631/348-0279
Info@Mason-Ind.com

2101 W. Crescent Ave., Suite D
Anaheim, CA 92801
714/535-2727
FAX 714/535-5738
Info@MasonAnaheim.com

www.Mason-Ind.com

JOB NAME 26 west 9th street
CUSTOMER
CUSTOMER P.O.
MASON M.I.
DWG. NO.

C

1" Deflection
A, B, C, D & E
Series Mounts

Illustration shows single spring C-A, C-B or C-C mount.
C-D & C-E mounts have 2 & 4 springs each respectively.

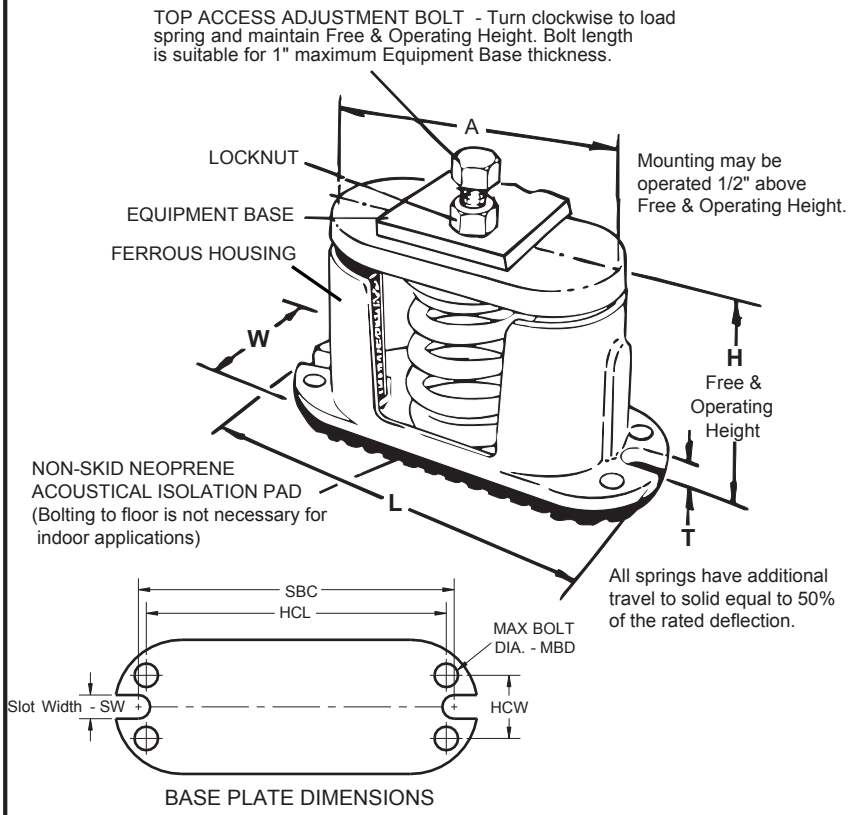

BASE PLATE DIMENSIONS

TYPE C DIMENSIONS (inches) (Casting Dimensions may vary ± 1/8")

Size	A	L	T	W	SW	HCL	HCW	MBD	SBC	Adjustm. Bolt	Free & Oper. Height
C-A	4	5 3/4	1/2	2 1/8	5/16	4 3/4	1	1/4	5	3/8 × 4	4 1/2
C-B	5 3/4	8 1/4	1/2	2 3/4	7/16	6 1/2	1 1/2	3/8	7 1/4	1/2 × 4	5 5/8
C-C	6 5/8	8 7/8	9/16	3 1/2	7/16	7 1/4	1 3/4	3/8	7 7/8	5/8 × 4 1/2	5 5/8
C-D	9 3/4	12	9/16	3 1/2	7/16	10 3/8	1 3/4	3/8	11	5/8 × 4 1/2	6 1/8
C-E	12 1/8	12 3/4	5/8	6 5/8	-	11 3/8	5 1/8	1/2	-	3/4 × 5	6 1/8

TYPE C RATINGS

Size	Rated Capacity (lbs)	Rated Defl. (in)	Spring Constant (lbs/in)	Spring Color/ Stripe
C-A-45	45	1.60	28	Blue
C-A-75	75	1.50	50	Orange
C-A-125	125	1.33	94	Brown
C-A-200	200	1.15	174	Black
C-A-310	310	1.00	310	Yellow
C-A-400	400	1.00	400	Green
C-A-510	510	1.00	510	Red
C-A-625	625	1.00	625	White
C-B-65	65	2.10	31	Brown
C-B-85	85	2.10	40	White/Black
C-B-115	115	2.00	57	Silver
C-B-150	150	2.00	75	Orange
C-B-280	280	1.60	174	Green
C-B-450	450	1.31	344	Red
C-B-750	750	1.12	670	White
C-B-1000	1000	1.00	1000	Blue
C-B-1250	1250	1.00	1250	Gray
C-B-1650	1650	1.00	1650	Black
C-C-1000	1000	1.00	1000	Black
C-C-1350	1350	1.00	1350	Yellow
C-C-1750	1750	1.00	1750	Black*
C-C-2100	2100	1.00	2100	Yellow*
C-C-2385	2385	1.00	2385	Yellow**
C-C-2650	2650	1.00	2650	Red*
C-C-2935	2935	1.00	2935	Red**
C-D-3500	3500	1.00	3500	Black*
C-D-4200	4200	1.00	4200	Yellow*
C-D-4770	4770	1.00	4770	Yellow**
C-D-5300	5300	1.00	5300	Red*
C-D-5870	5870	1.00	5870	Red**
C-E-7000	7000	1.00	7000	Black*
C-E-8400	8400	1.00	8400	Yellow*
C-E-9540	9540	1.00	9540	Yellow**
C-E-10600	10600	1.00	10600	Red*
C-E-11740	11740	1.00	11740	Red**

*with RED core Spring **with GREEN core Spring

CERTIFICATION DATA

TAG :

UNIT :

PLAN VIEW OF MOUNT LOCATION:

Click with mouse for each location >

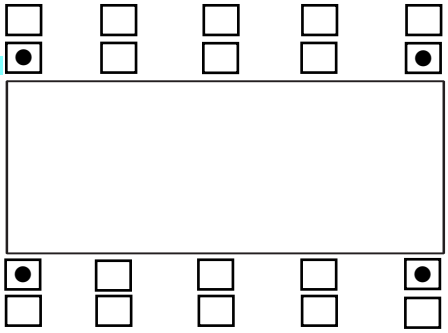

SPECIFIED DEFLECTION

1 :	6 :
2 :	7 :
3 :	8 :
4 :	9 :
5 :	10 :
Sets Required:	