QSSB, QSSX

Next Generation Super Stand
VRF/VRV Equipment Stands

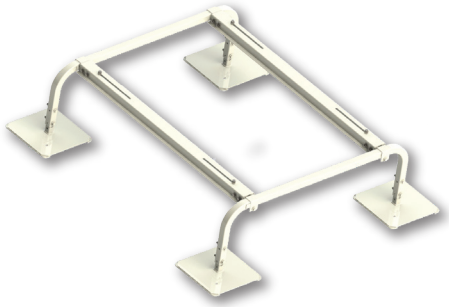

QSSB, QSSX

Application

The newly redesigned Super Stands are now simpler to order, easier to size and compatible with more equipment models than ever.

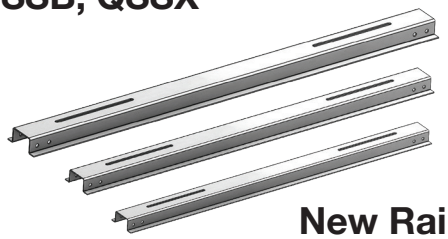

New Rail Lengths

Features

- Infinite depth adjustability with new sliding rail design
- Rail slots allow for mounting hole alignment for most all equipment models
- New base and extension models make customizing stands quick and easy
- 900lb capacity for each single module section
- Reduced number of SKUs
- Hurricane Rated

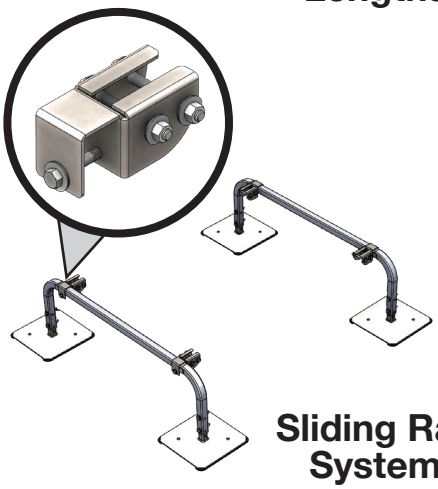

Sliding Rail System

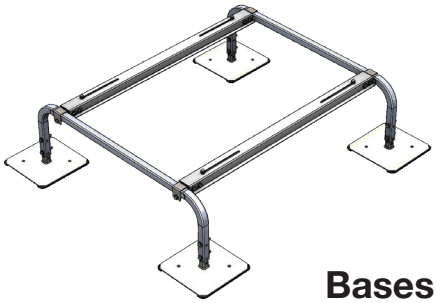

Bases

Extensions

DiversiTech Corporation
Duluth, GA 30097
0522

DIVERSITECH®

Base Stands

48" Wide Base Stands
QSSB48-12 (12" Tall)
QSSB48-18 (18" Tall)
QSSB48-24 (24" Tall)

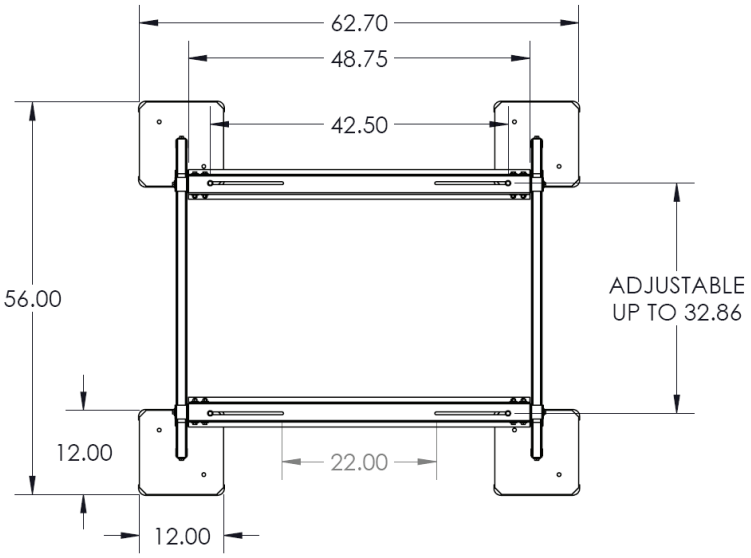

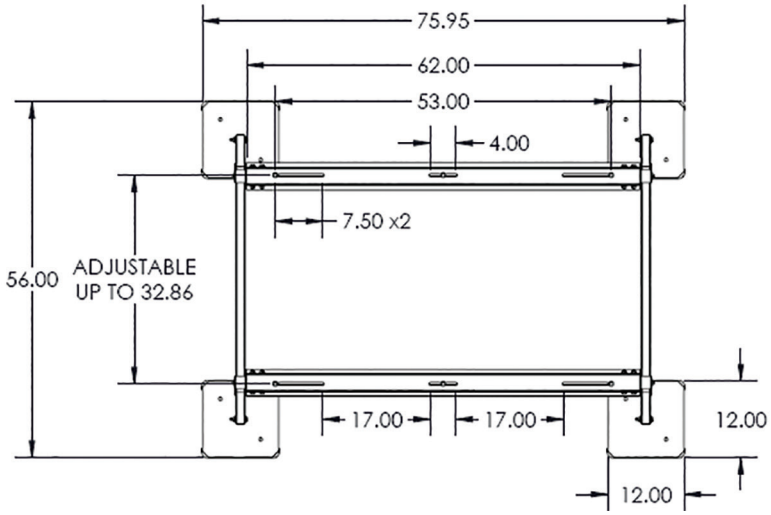

62" Wide Base Stands
QSSB62-12 (12" Tall)
QSSB62-18 (18" Tall)
QSSB62-24 (24" Tall)

74" Wide Base Stands
QSSB74-12 (12" Tall)
QSSB74-18 (18" Tall)
QSSB74-24 (24" Tall)

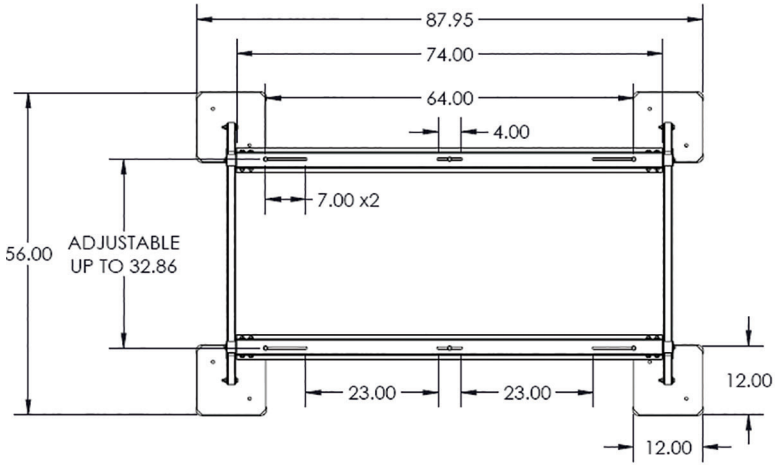

Extension Kits

48" Wide Extension Kit
QSSX48-12 (12" Tall)
QSSX48-18 (18" Tall)
QSSX48-24 (24" Tall)

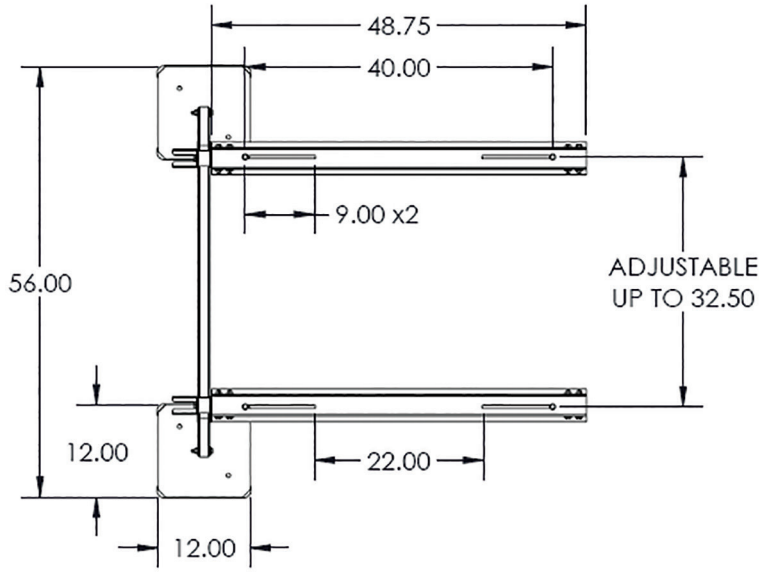

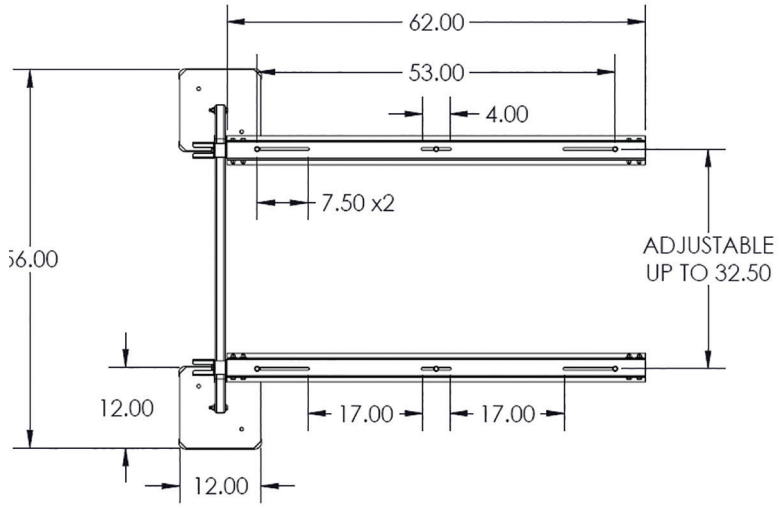

62" Wide Extension Kit
QSSX62-12 (12" Tall)
QSSX62-18 (18" Tall)
QSSX62-24 (24" Tall)
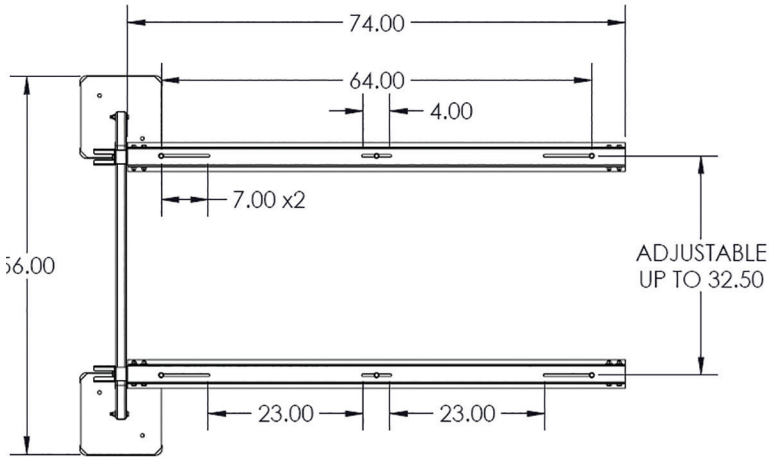
74" Wide Extension Kit
QSSX74-12 (12" Tall)
QSSX74-18 (18" Tall)
QSSX74-24 (24" Tall)