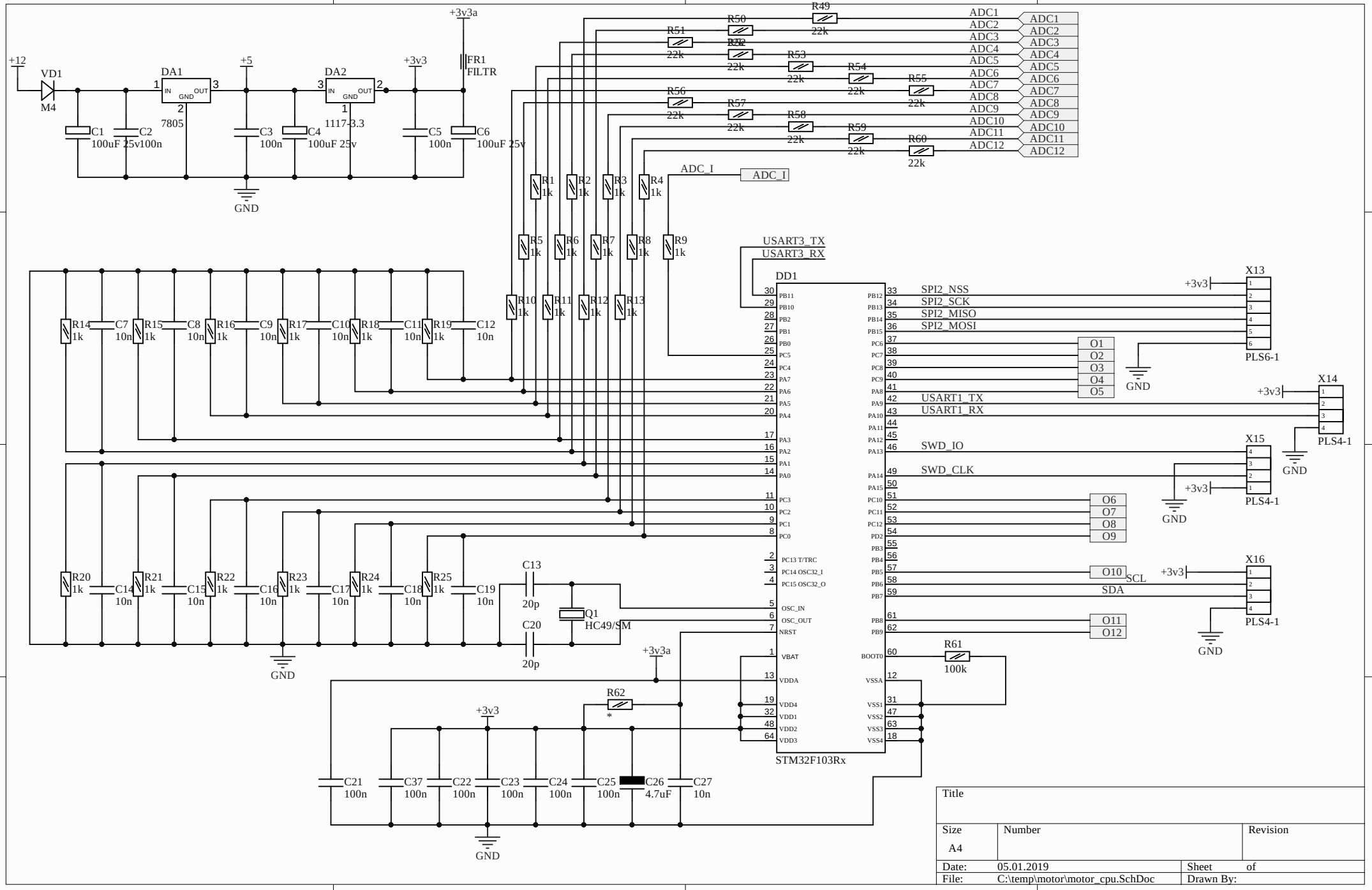
+12
VD1
M4
DA1
7805
DA2
1117-3.3
+5
+3v3
+3v3a
FR1
FILTR
C1
100uF 25v
C2
100n
C3
100n
C4
100uF 25v
C5
100n
C6
100uF 25v
GND
R49
R50
R51
R52
R53
R54
R55
R56
R57
R58
R59
R60
22k
ADC1
ADC2
ADC3
ADC4
ADC5
ADC6
ADC7
ADC8
ADC9
ADC10
ADC11
ADC12
ADC_I
R1
R2
R3
R4
R5
R6
R7
R8
R9
R10
R11
R12
R13
R14
R15
R16
R17
R18
R19
R20
R21
R22
R23
R24
R25
1k
C7
C8
C9
C10
C11
C12
C13
C14
C15
C16
C17
C18
C19
C20
10n
20p
Q1
HC49/SM
USART3_TX
USART3_RX
DD1
STM32F103Rx
PB11
PB10
PB2
PB1
PB0
PC5
PC4
PA7
PA6
PA5
PA4
PA3
PA2
PA1
PA0
PC3
PC2
PC1
PC0
PC13 T/TRC
PC14 OSC32_I
PC15 OSC32_O
OSC_IN
OSC_OUT
NRST
VBAT
VDDA
VDD4
VDD1
VDD2
VDD3
PB12
PB13
PB14
PB15
PC6
PC7
PC8
PC9
PA8
PA9
PA10
PA11
PA12
PA13
PA14
PA15
PC10
PC11
PC12
PD2
PB3
PB4
PB5
PB6
PB7
PB8
PB9
BOOT0
VSSA
VSS1
VSS2
VSS3
VSS4
SPI2_NSS
SPI2_SCK
SPI2_MISO
SPI2_MOSI
USART1_TX
USART1_RX
SWD_IO
SWD_CLK
SCL
SDA
O1
O2
O3
O4
O5
O6
O7
O8
O9
O10
O11
O12
R61
100k
R62
*
C21
C37
C22
C23
C24
C25
C26
4.7uF
C27
X13
PLS6-1
X14
PLS4-1
X15
PLS4-1
X16
PLS4-1
Title
Size
A4
Number
Revision
Date:
05.01.2019
Sheet
of
File:
C:\temp\motor\motor_cpu.SchDoc
Drawn By:

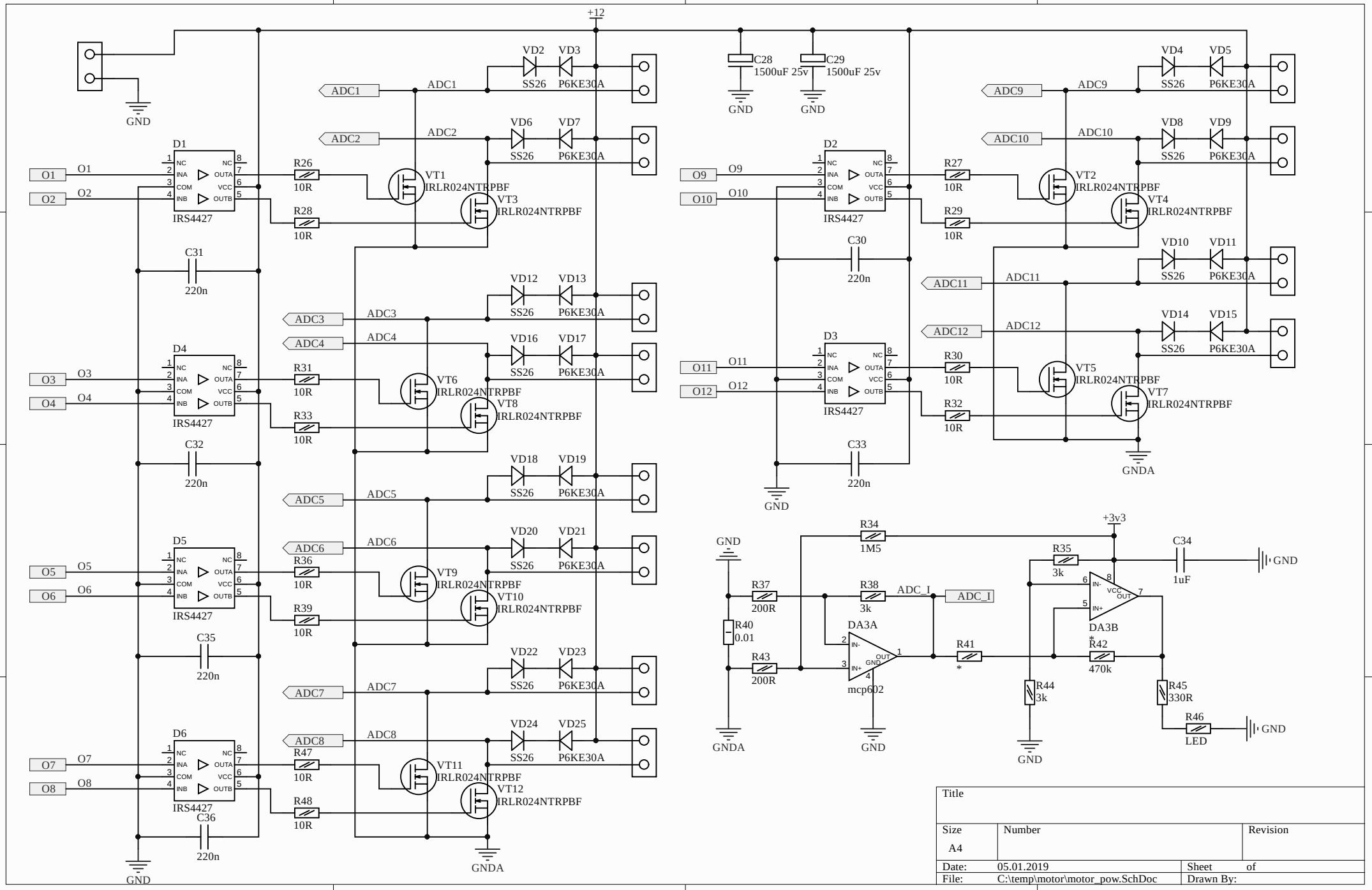
+12
GND
GNDA
+3v3
D1
D2
D3
D4
D5
D6
IRS4427
O1
O2
O3
O4
O5
O6
O7
O8
O9
O10
O11
O12
R26
R27
R28
R29
R30
R31
R32
R33
R36
R39
R47
R48
10R
C31
C32
C33
C36
220n
C28
C29
1500uF 25v
C30
VT1
VT2
VT3
VT4
VT5
VT6
VT7
VT8
VT9
VT10
VT11
VT12
IRLR024NTRPBF
ADC1
ADC2
ADC3
ADC4
ADC5
ADC6
ADC7
ADC8
ADC9
ADC10
ADC11
ADC12
VD2
VD3
VD4
VD5
VD6
VD7
VD8
VD9
VD10
VD11
VD12
VD13
VD14
VD15
VD16
VD17
VD18
VD19
VD20
VD21
VD22
VD23
VD24
VD25
SS26
P6KE30A
R34
1M5
R35
3k
C34
1uF
R37
200R
R38
3k
ADC_I
R40
0.01
R43
200R
DA3A
mcp602
R41
*
DA3B
R42
470k
R44
3k
R45
330R
R46
LED
Title
Size
A4
Number
Revision
Date:
05.01.2019
Sheet
of
File:
C:\temp\motor\motor_pow.SchDoc
Drawn By:

X11
X12
X9
X10
X6
X8
X1
X3
X2
X4
X5
X7
VT11
VT12
VT9
VT10
VT6
VT8
VT1
VT3
VT2
VT4
VT5
VT7
VD22
VD24
VD18
VD20
VD12
VD16
VD2
VD6
VD4
VD8
VD10
VD14
D6
D5
D4
D1
D2
D3
C36
C35
C32
C31
C30
C33
Input -12v
X17
Input +12v
C29
C28
R40
2512
R38
R37
DA3
R34 R35 R44 C34
R42 R45 R46
VD1
C1
C2
DA1
C3
C4
DA2
SOT-223
C5
C6
X13
GND
PB15 SPI2_MOSI
PB14 SPI2_MISO
PB13 SPI2_SCK
PB12 SPI2_NSS
3V3
X14
3V3
PA9 - USART1_TX
PA10 - USART1_RX
GND
X15
SWD_IO
GND
SWD_CLK
3V3
X16
3V3
PB6 SCL
PB7 SDA
GND
Q1
C21
C27
C23
C22
R61
R62
C37
C25
R5 R18 C11
R1
R11
R6
R2
R12
C15 R21 R7
152,40
101,60