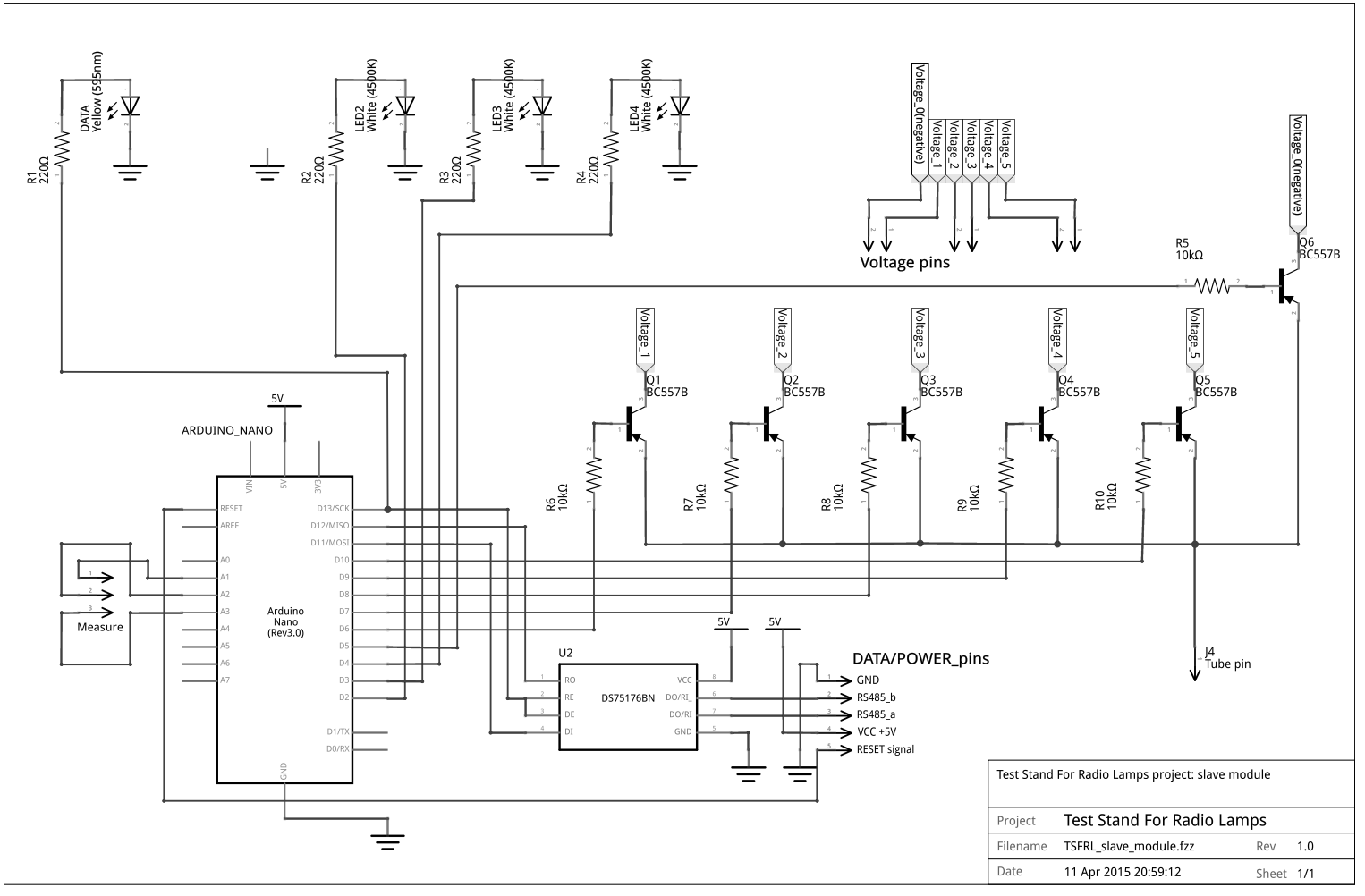

Test Stand For Radio Lamps project: slave module

Project	Test Stand For Radio Lamps		
Filename	TSFRL_slave_module.fzz	Rev	1.0
Date	11 Apr 2015 20:59:12	Sheet	1/1

fritzing