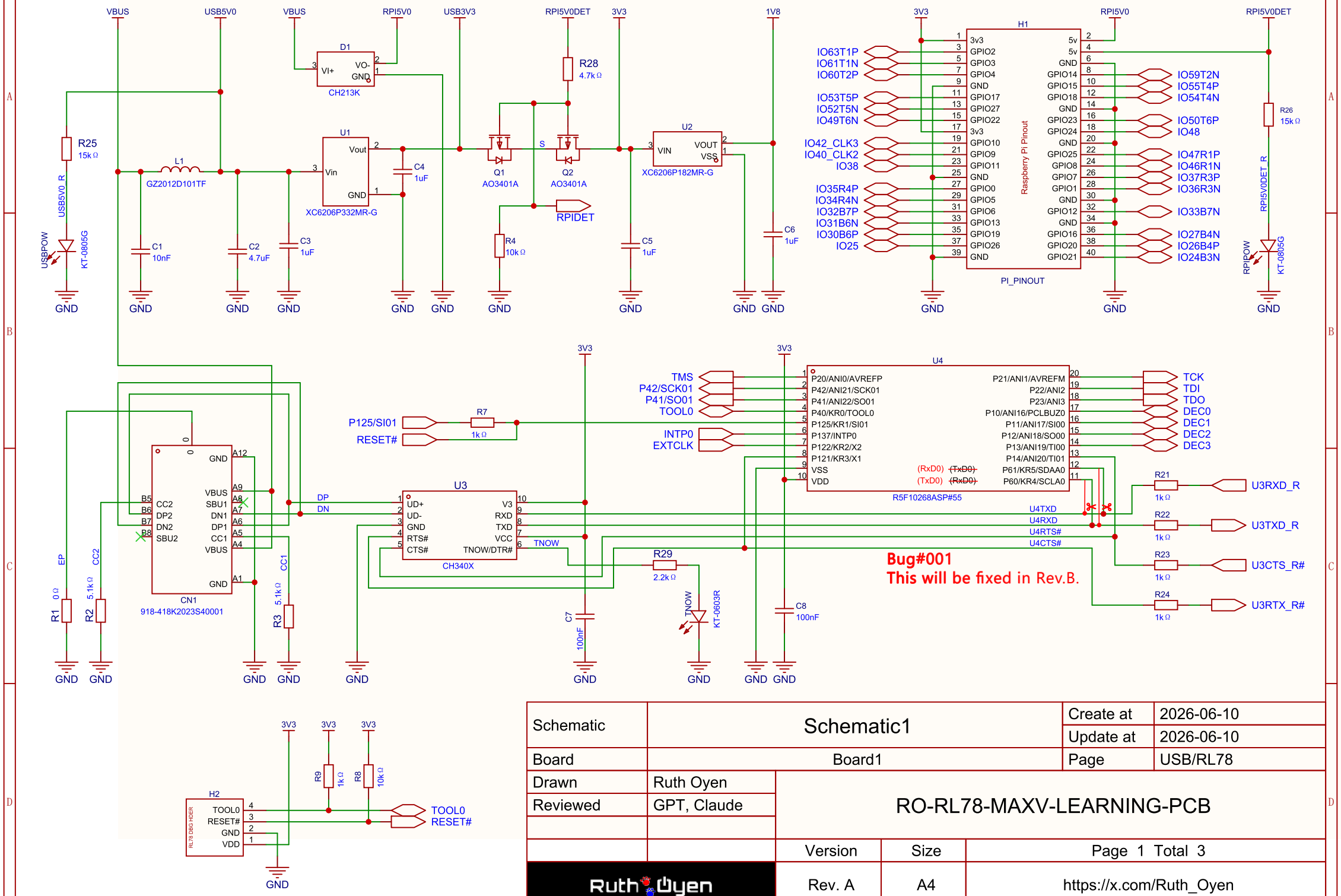


| | | | |
|---|---|---|---|
| Schematic | Schematic1 | Create at | 2026-06-10 |
| | | Update at | 2026-06-10 |
| Board | Board1 | Page | USB/RL78 |
| Drawn | Ruth Oyen | RO-RL78-MAXV-LEARNING-PCB | |
| Reviewed | GPT, Claude | | |
| | | Version | Size | Page 1 Total 3 |
| Ruth Oyen | | Rev. A | A4 | https://x.com/Ruth_Oyen |

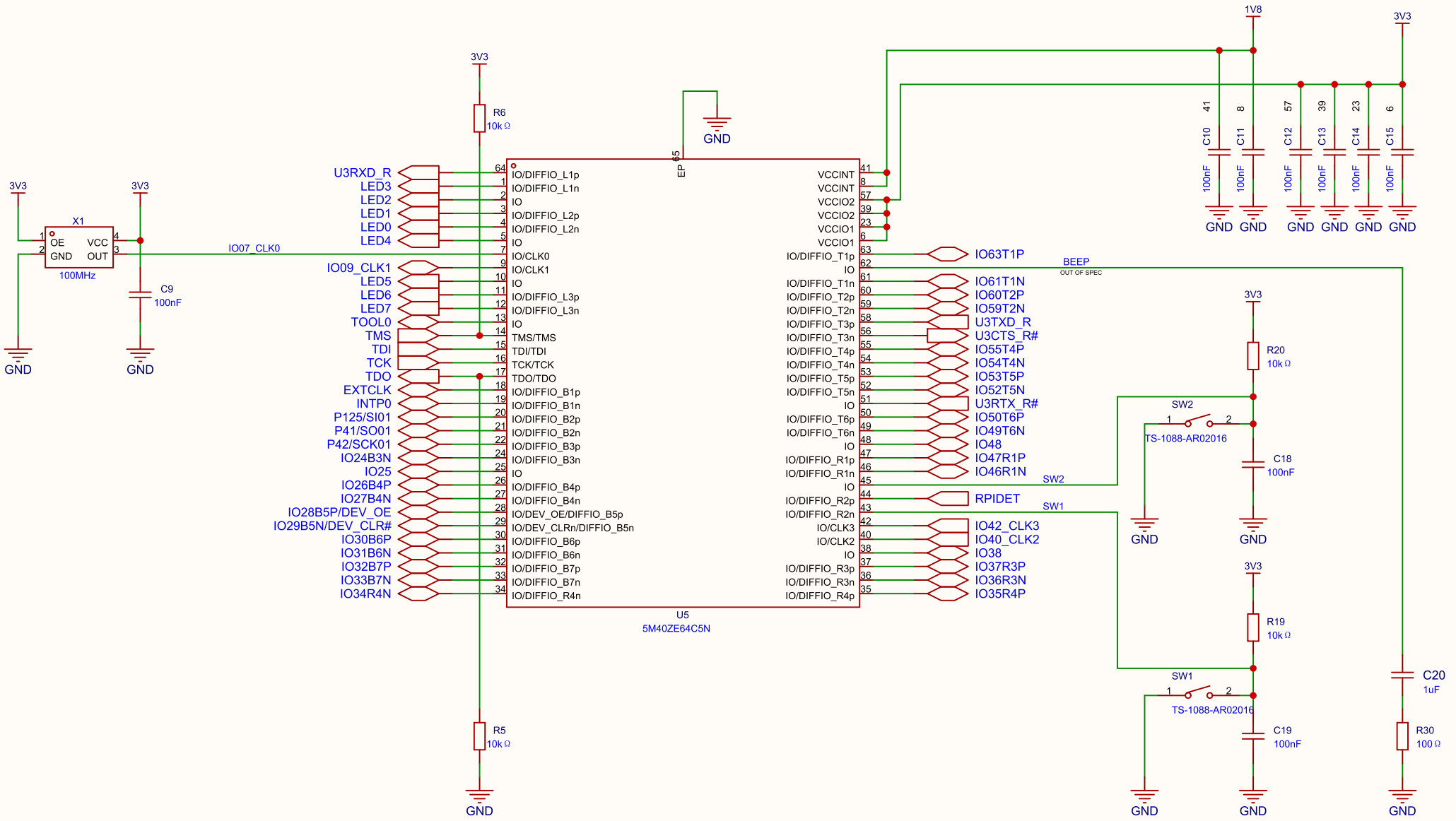


| | | | |
|---|---|---|---|
| Schematic | Schematic1 | Create at | 2026-06-10 |
| | | Update at | 2026-06-10 |
| Board | Board1 | Page | MAXV |
| Drawn | Ruth Oyen | RO-RL78-MAXV-LEARNING-PCB | |
| Reviewed | GPT, Claude | | |
| | | Version | Size | Page 2 Total 3 |
| Ruth Oyen | | Rev. A | A4 | https://x.com/Ruth_Oyen |

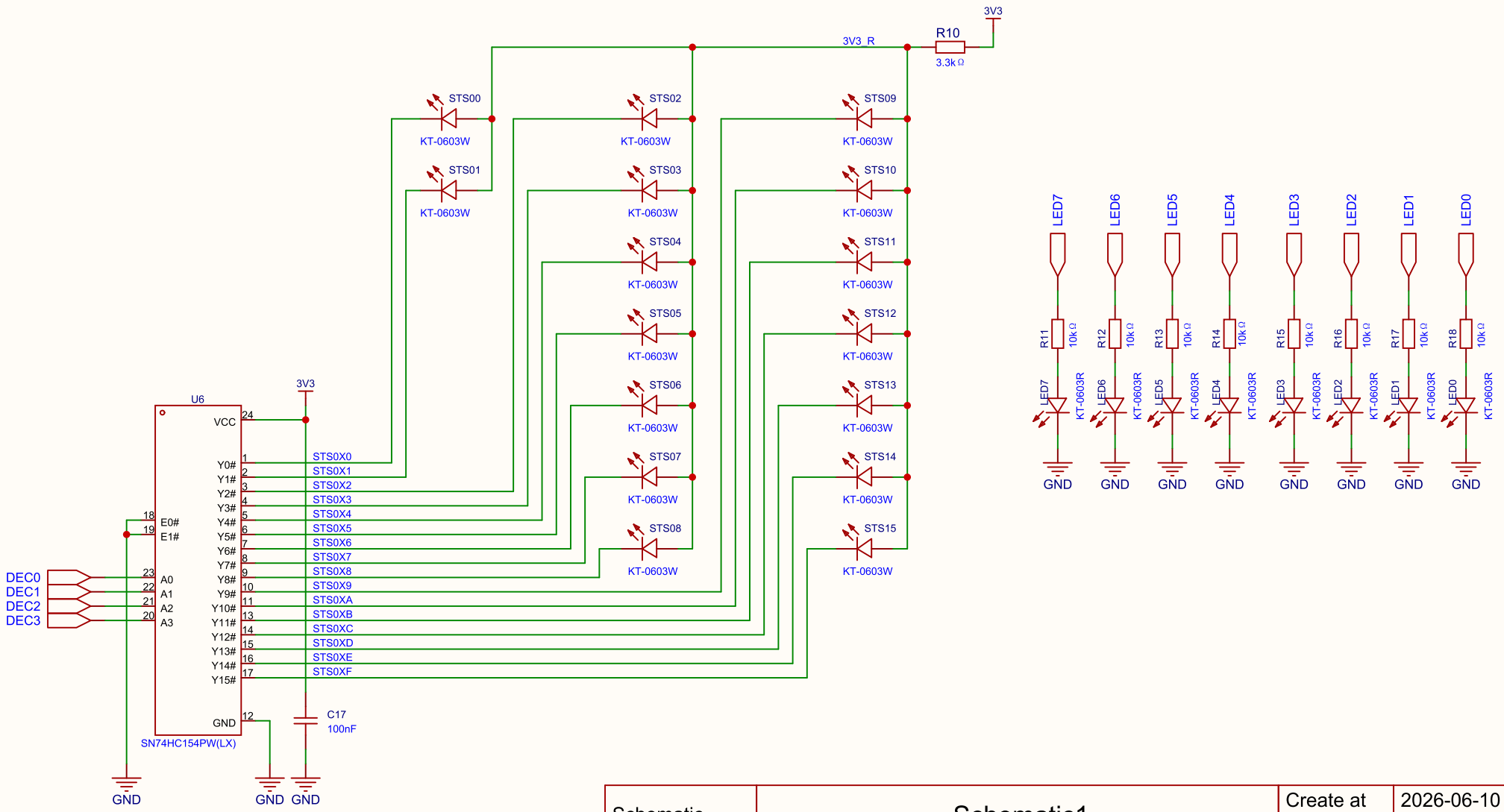


| | | | |
|---|---|---|---|
| Schematic | Schematic1 | Create at | 2026-06-10 |
| | | Update at | 2026-06-10 |
| Board | Board1 | Page | DEC/LED |
| Drawn | Ruth Oyen | RO-RL78-MAXV-LEARNING-PCB | |
| Reviewed | GPT, Claude | | |
| | | Version | Size | Page 3 Total 3 |
| Ruth Oyen | | Rev. A | A4 | https://x.com/Ruth_Oyen |