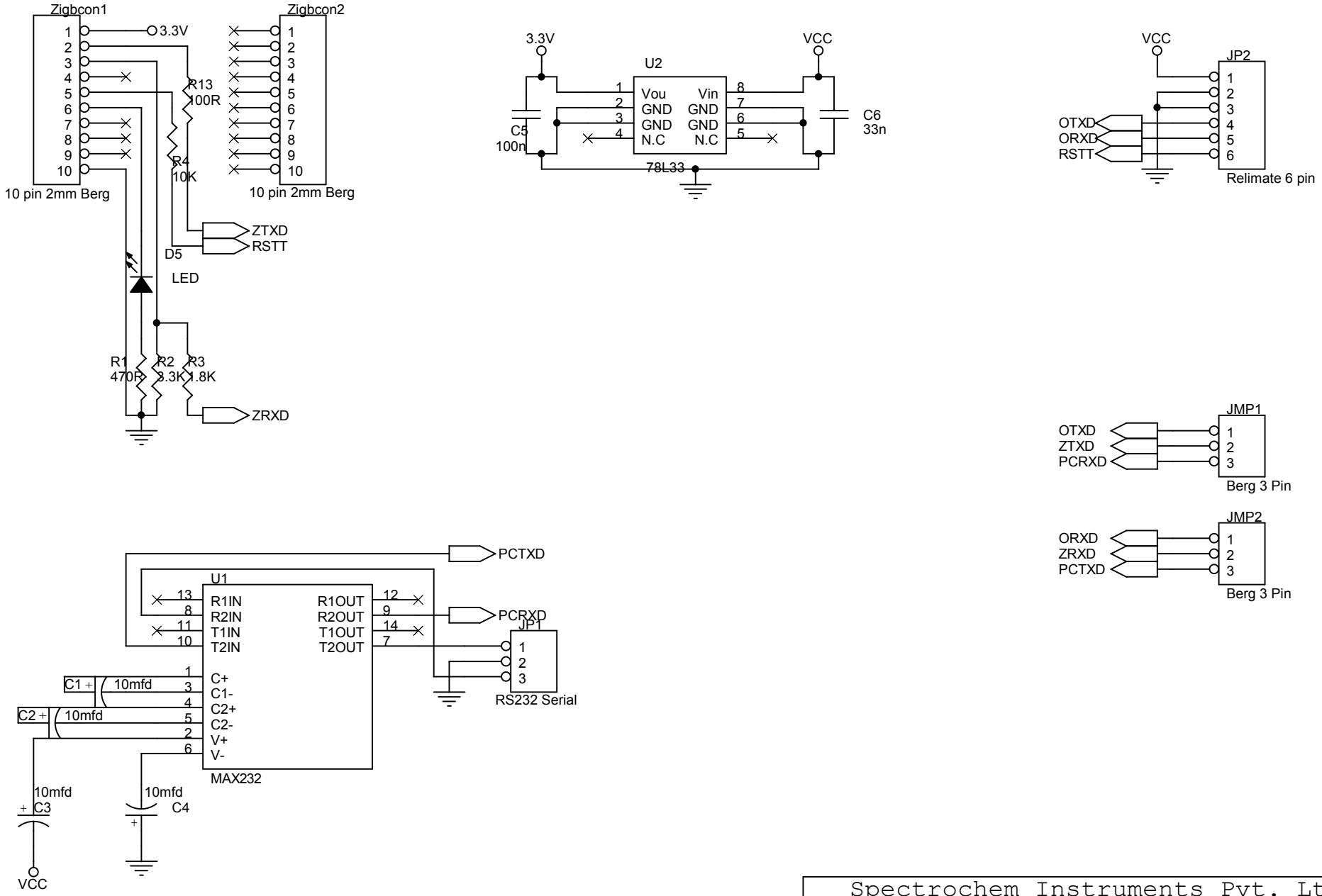

Spectrochem Instruments Pvt. Ltd.

Title	RS232 & Zigbee Interface	
Size A	Document Number SCI/ADON-232-ZIGBEE/-052009	Rev Maddie
Date: Monday, August 31, 2009	Sheet 1 of 1	