THE PATENTS ACT, 1970 (39 of 1970)

& THE PATENTS RULES, 2003

COMPLETE SPECIFICATION

(See Section 10 and Rule 13)

TITLE OF THE INVENTION

AN ADAPTIVE GAZE-CONTINGENT RENDERING SYSTEM AND METHOD FOR REAL-TIME MITIGATION OF VERGENCE-ACCOMMODATION CONFLICT

Date of Filing:

8th Day of April, 2026

Applicant(s):

[Name: KOLA KISHORE
Nationality: Indian
Address: H No. 9-7-363/1, VITTALNAGAR, GODAVARIKHANI, PEDDAPALLI, Telangana – 505209, India

Name: PALABINDALA REVANTH
Nationality: Indian
Address: Flat No. 9-8-4, JANGOAN, WARANGAL, Telangana – 506167, India

Name: KOMMIREDDY RUPAAS SHYNI
Nationality: Indian
Address: Flat No. 12-3-45, GOLAGUDEM ROAD ANR CLASSIC APPARTEMENT MAMATHA ROAD KHAMMAM, TELANGANA,507001,INDIA

Name: PEDDITI RUTHWICK REDDY
Nationality: Indian
Address: Flat No. 5-61, VALOGONDA, NALGONDA, Telangana – 508112, India]

PREAMBLE TO THE DESCRIPTION

The following specification particularly describes the invention and the manner in which it is to be performed. This complete specification is filed pursuant to Section 10 and Rule 13 of The Patents Act, 1970 (39 of 1970) and The Patents Rules, 2003.

1. FIELD OF THE INVENTION

The present invention relates to Virtual Reality (VR) and Augmented Reality (AR) display systems. More particularly, it relates to a system that utilizes high-speed eye-tracking and varifocal optics to resolve Vergence-Accommodation Conflict (VAC).

Technical Domain: Extended Reality (XR) Hardware, Optical Engineering, Human-Computer Interaction, Biomedical Signal Processing

2. BACKGROUND OF THE INVENTION

Standard VR headsets present 3D content on a fixed focal plane, causing a mismatch between the eyes' rotation (vergence) and focus (accommodation). This conflict, known as Vergence-Accommodation Conflict (VAC), leads to ocular fatigue, nausea, and reduced user comfort during extended XR sessions.

Current software-based approaches — such as depth-of-field blurring and post-processing filters — fail to provide a true physiological focus shift. These solutions address the symptom rather than the root cause, as they do not alter the physical focal plane at which the display optics project images onto the user's retina.

There exists a clear and unfulfilled need in the art for a hardware-software integrated system capable of dynamically adjusting the physical focal plane to match the user's instantaneous vergence state, thereby eliminating the physiological mismatch at its source.

3. OBJECTS OF THE INVENTION

- To provide a hardware-software bridge that aligns the physical focal plane with virtual depth in real-time, eliminating VAC at its physiological source.
- To utilize bio-acoustic and neural data for predictive gaze-contingent rendering, enabling sub-5ms lens actuation latency.
- To provide an asymmetric varifocal liquid lens capable of real-time astigmatism correction.
- To enable foveated mesh rendering guided by predictive saccadic vector computation for compute-efficient high-fidelity display.

- To support multi-user collaborative gaze mapping via a synchronized gaze aggregation network architecture.
- To provide a modular, universal data port (MGAD) for interoperability with third-party VR/AR platforms.

4. SUMMARY OF THE INVENTION

The invention discloses a system comprising an eye-tracking module, a processing engine, and a varifocal lens assembly. By tracking gaze at 10,000Hz, the system adjusts a physical liquid lens or actuator in sub-5ms to match the user's focal intent, thereby resolving vergence-accommodation conflict in real time.

The core system components include: (i) a high-speed dual-camera gaze capture subsystem operating at 10,000Hz; (ii) an Asymmetric Electrode Liquid Lens (AELL) enabling dynamic focus and astigmatism correction; (iii) an Acoustic-Piston Varifocal Actuator for sub-5ms mechanical focal adjustment; (iv) a Predictive Look-Ahead Latency Algorithm incorporating a latency-correction matrix and parallax buffer; (v) a Neural-Intent Trigger mechanism fusing EEG alpha waves and ciliary muscle tension data; and (vi) a Visual Comfort Profile (VCP) mapping system for personalised comfort calibration.

5. BRIEF DESCRIPTION OF THE ACCOMPANYING DRAWINGS

FIG. 1: Asymmetric Varifocal Liquid Lens & Headset Architecture (Component View)
FIG. 2: Adaptive Headset Architecture with Infrared LED Ring & Gaze Camera
FIG. 3: Acoustic-Piston Varifocal Actuator (Piezo-Electric Ring Assembly)
FIG. 4: Dual-Camera 10,000Hz Tracking Path with Integrated Gaze Sensor Module
FIG. 5: Predictive Look-Ahead Latency Algorithm Matrix (Latency-Correction Matrix)
FIG. 6: Gaze-Aware Foveated Mesh Simplification Levels (Eye Anatomy & Foveal Zone)
FIG. 7: Gaze-Aware Foveated Mesh 3D Representation (Saccadic Vector Prediction)
FIG. 8: Neural-Intent Trigger Mechanism Logic Circuit (EEG/Neural Input Processing)
FIG. 9: Foveal Focal Plane and Accommodation Vector Diagram
FIG. 10: Visual Comfort Profile (VCP) 3D Data Map (Vergence-Accommodation Axes)
FIG. 11: Collaborative Multi-User Gaze Mapping Network Architecture
FIG. 12: Bio-Acoustic Sensor Placement on Human Anatomy (Skin-Tap Detectors)
FIG. 13: MGAD Universal Data Port Interface Schematic (Gaze Port Connector)
FIG. 14: Thermal-Throttling Sensor Control Logic & Neural Gaze State Table

6. DRAWINGS

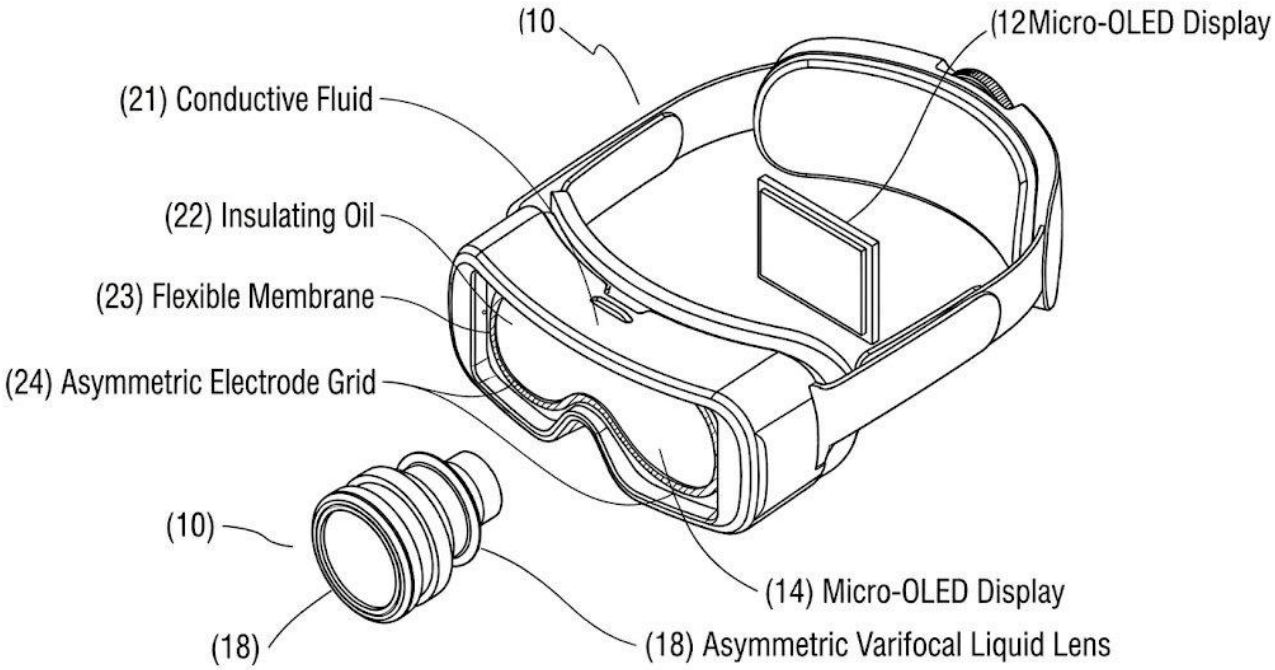

FIG. 1 – Asymmetric Varifocal Liquid Lens & Headset Architecture (Component View)

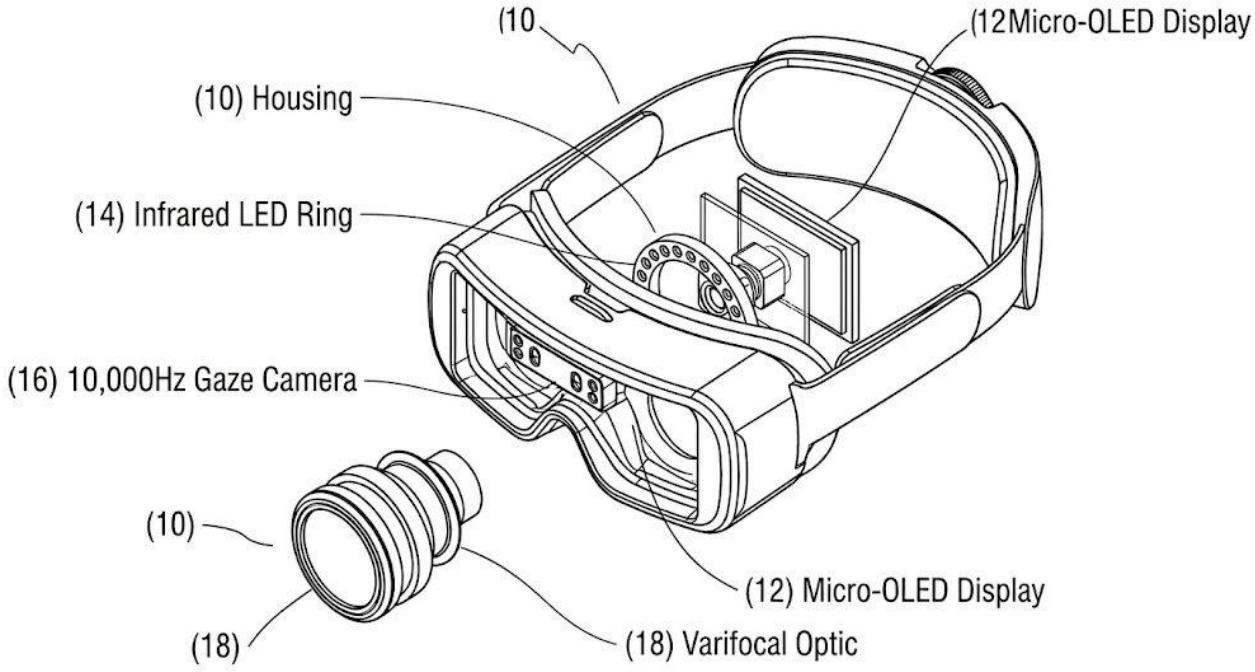

FIG. 2 – Adaptive Headset Architecture with Infrared LED Ring & Gaze Camera

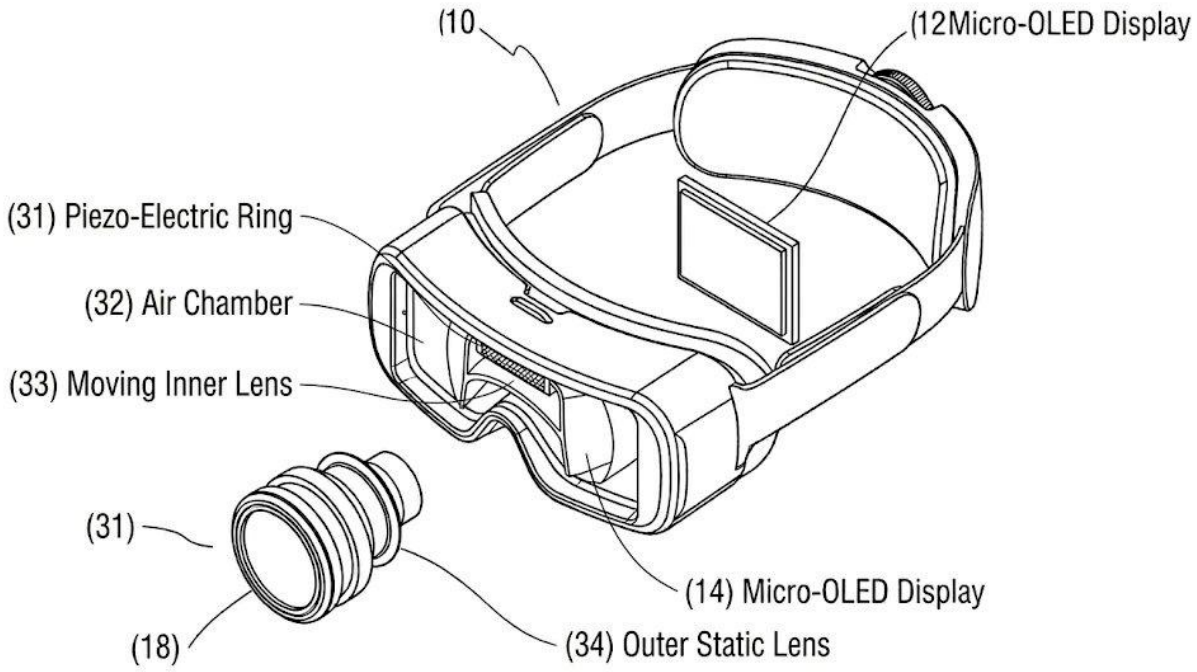

FIG. 3 – Acoustic-Piston Varifocal Actuator (Piezo-Electric Ring Assembly)

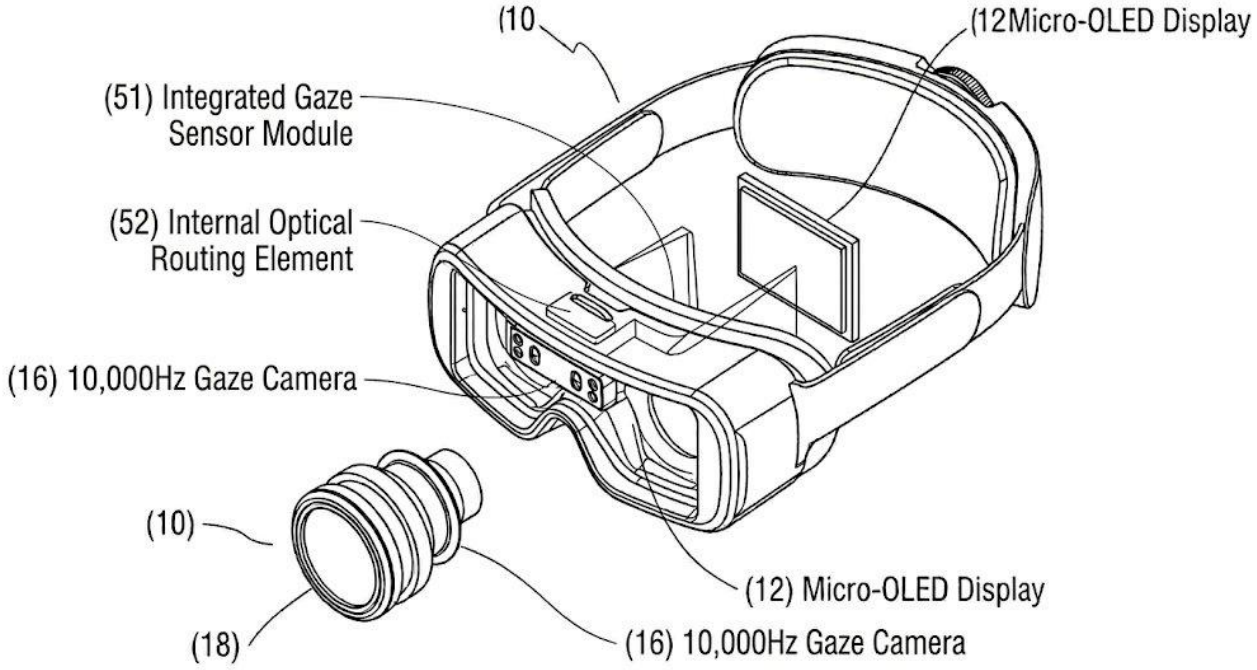

FIG. 4 – Dual-Camera 10,000Hz Tracking Path with Integrated Gaze Sensor Module

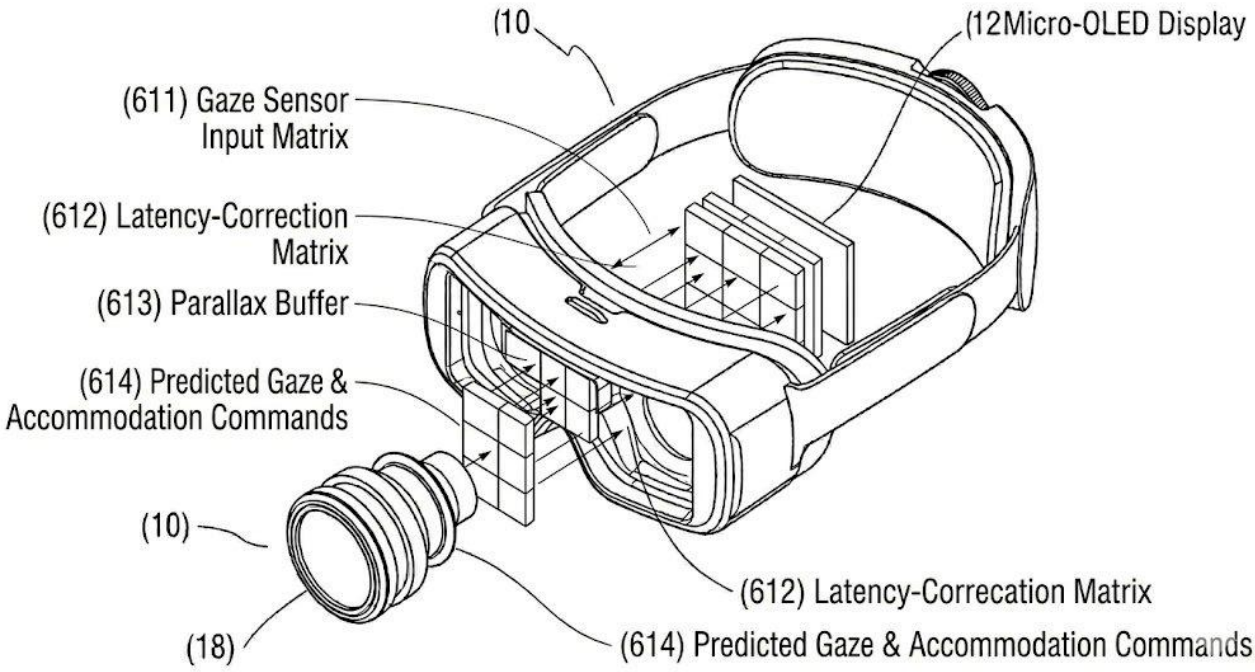

FIG. 5 – Predictive Look-Ahead Latency Algorithm Matrix (Latency-Correction Matrix)

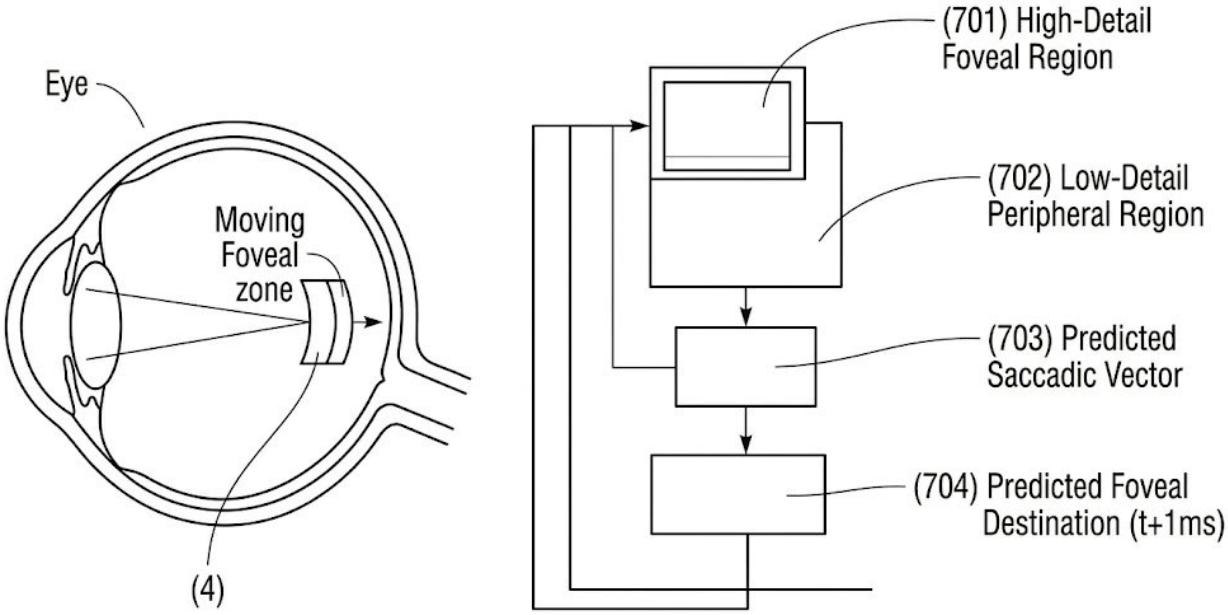

FIG. 6 – Gaze-Aware Foveated Mesh Simplification Levels (Eye Anatomy & Foveal Zone)

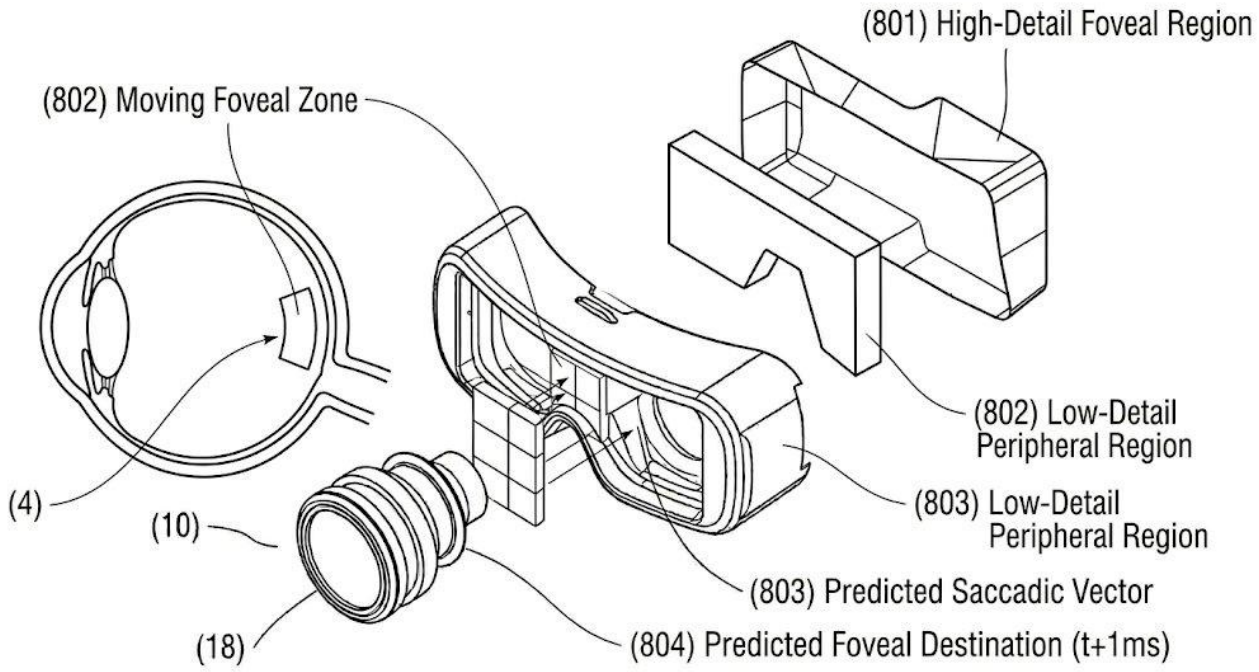

FIG. 7 – Gaze-Aware Foveated Mesh 3D Representation (Saccadic Vector Prediction)

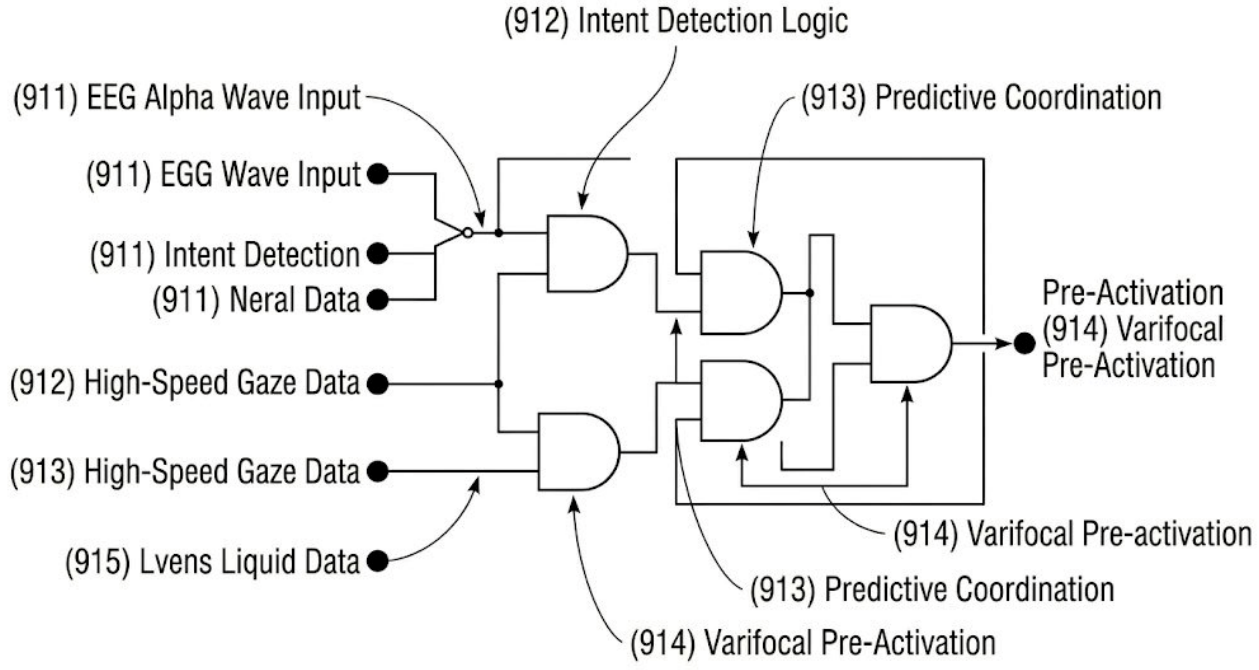

FIG. 8 – Neural-Intent Trigger Mechanism Logic Circuit (EEG/Neural Input Processing)

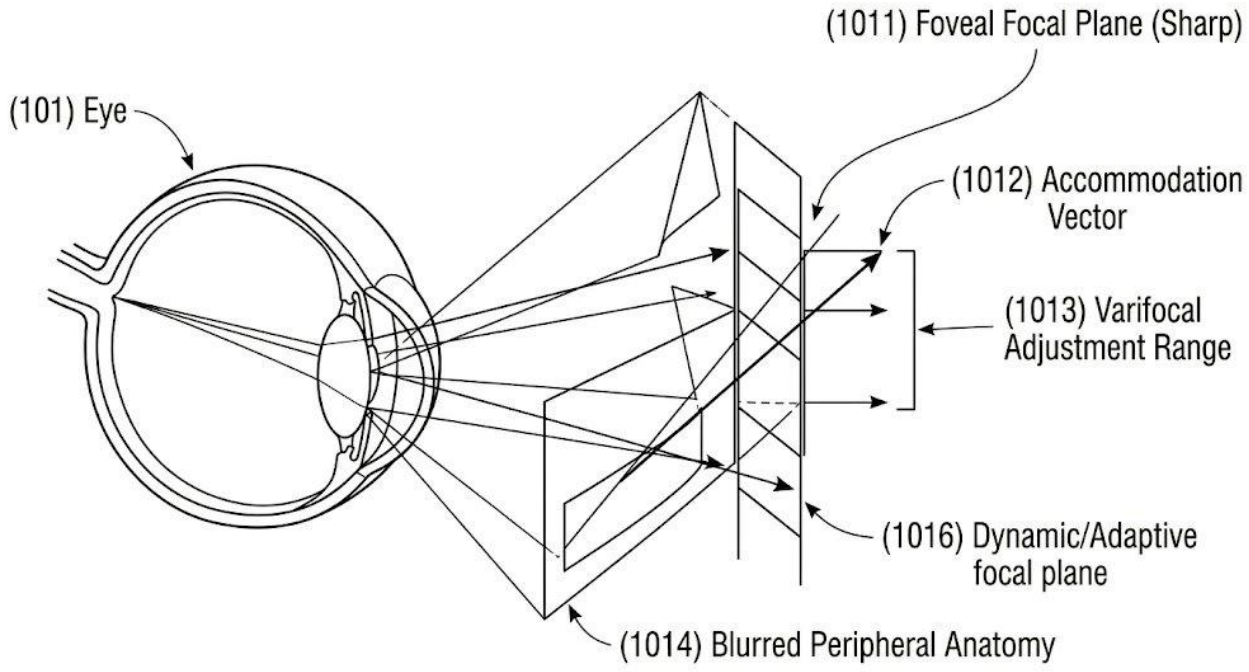

FIG. 9 – Foveal Focal Plane and Accommodation Vector Diagram

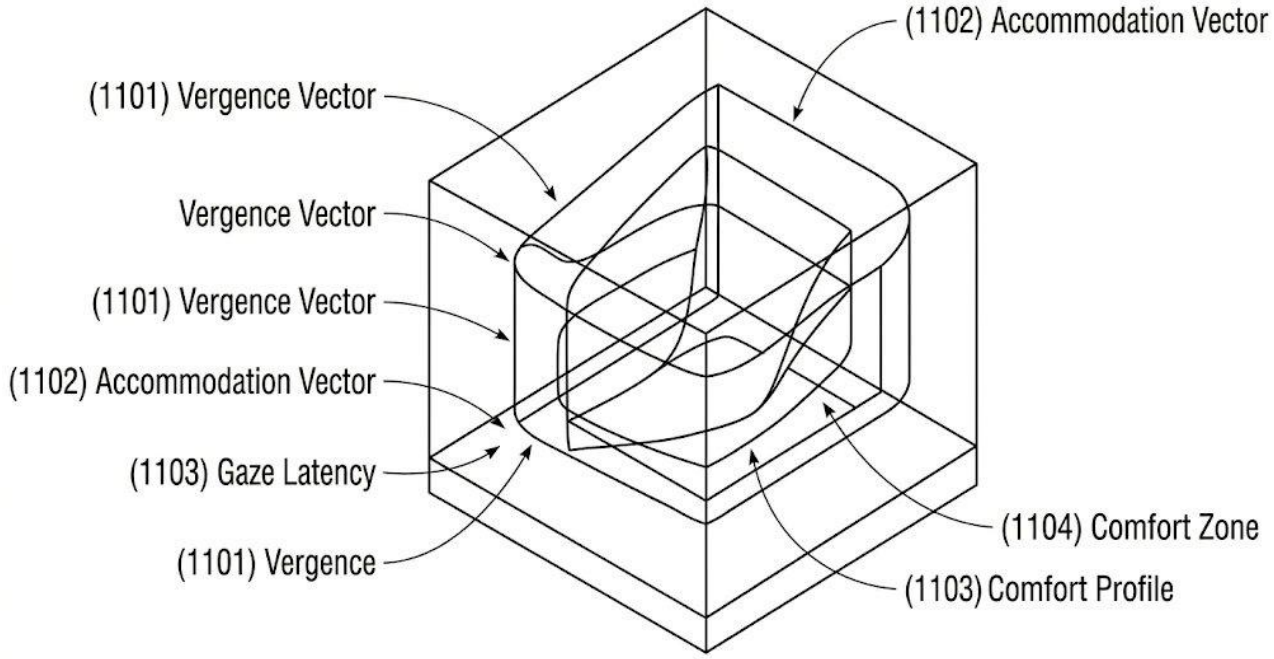

FIG. 10 – Visual Comfort Profile (VCP) 3D Data Map (Vergence-Accommodation Axes)

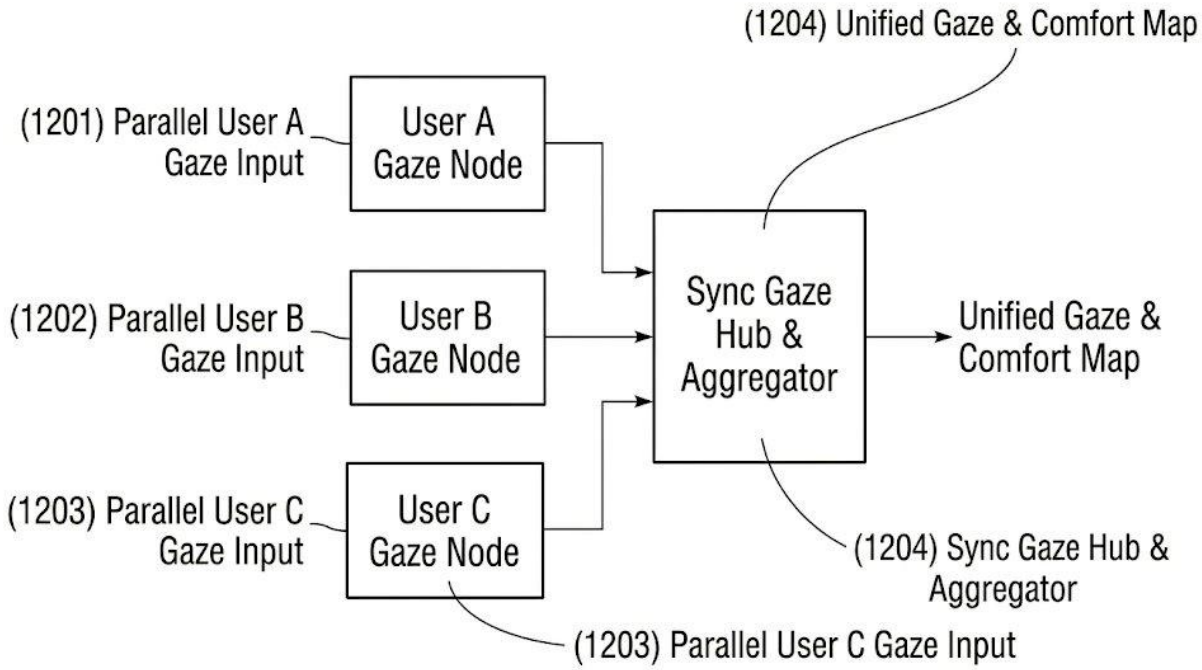

FIG. 11 – Collaborative Multi-User Gaze Mapping Network Architecture

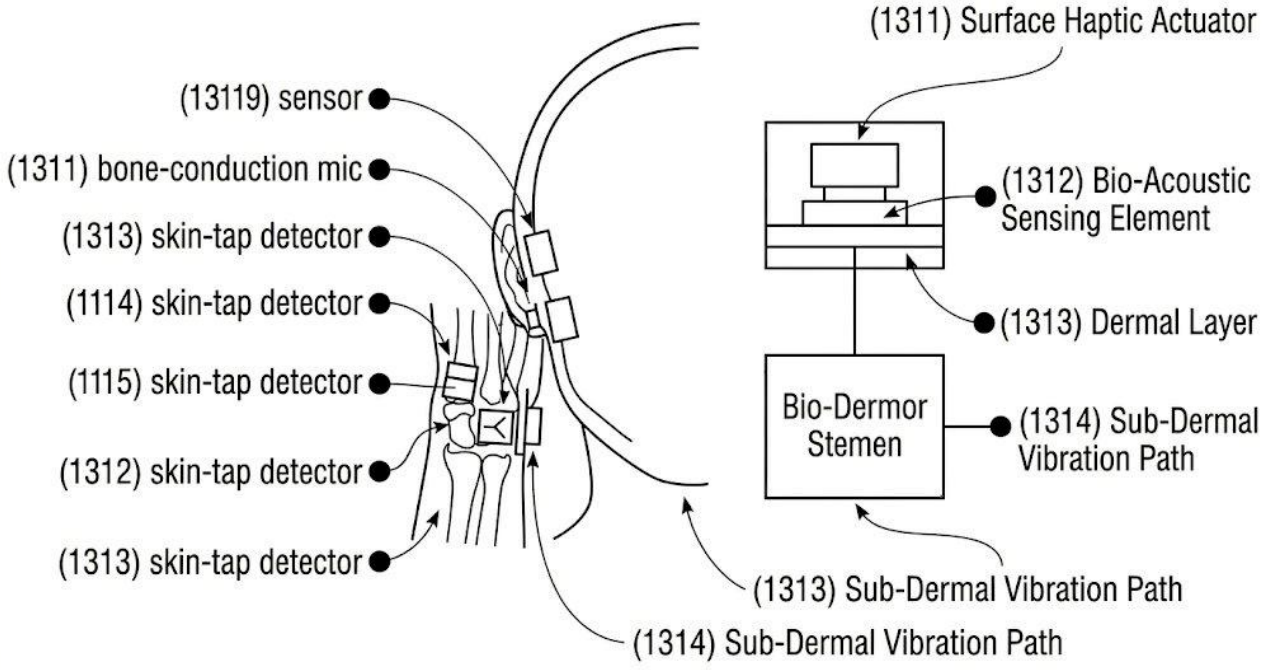

FIG. 12 – Bio-Acoustic Sensor Placement on Human Anatomy (Skin-Tap Detectors)

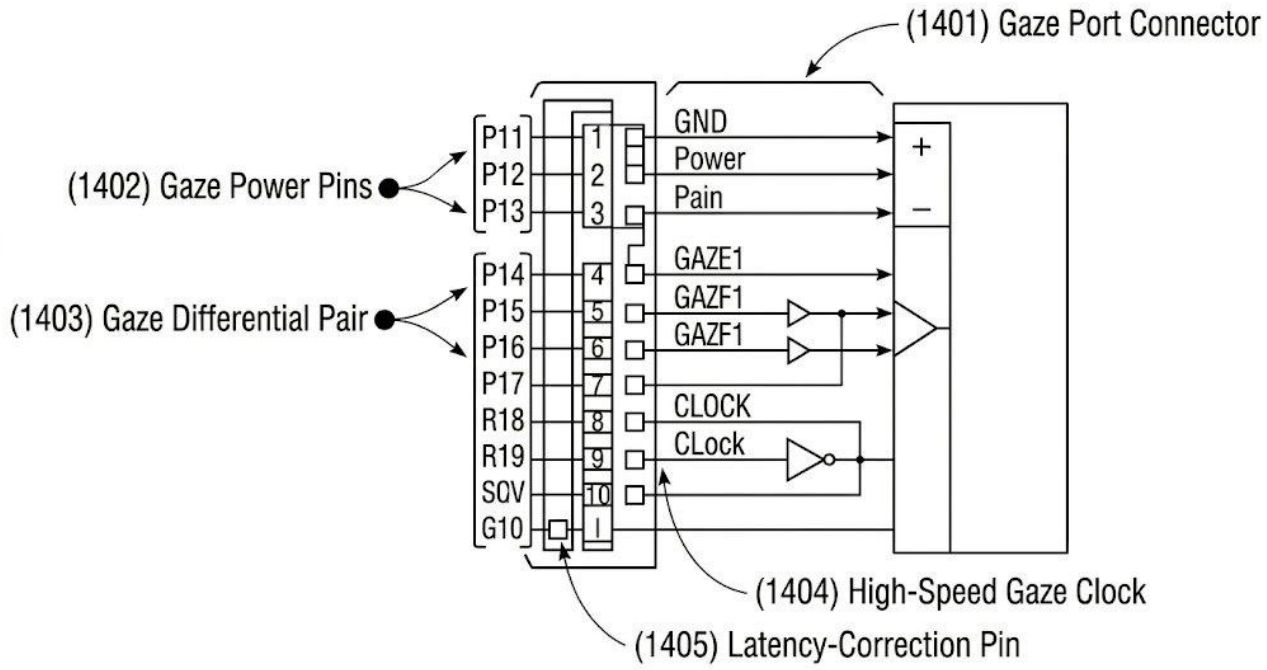

FIG. 13 – MGAD Universal Data Port Interface Schematic (Gaze Port Connector)

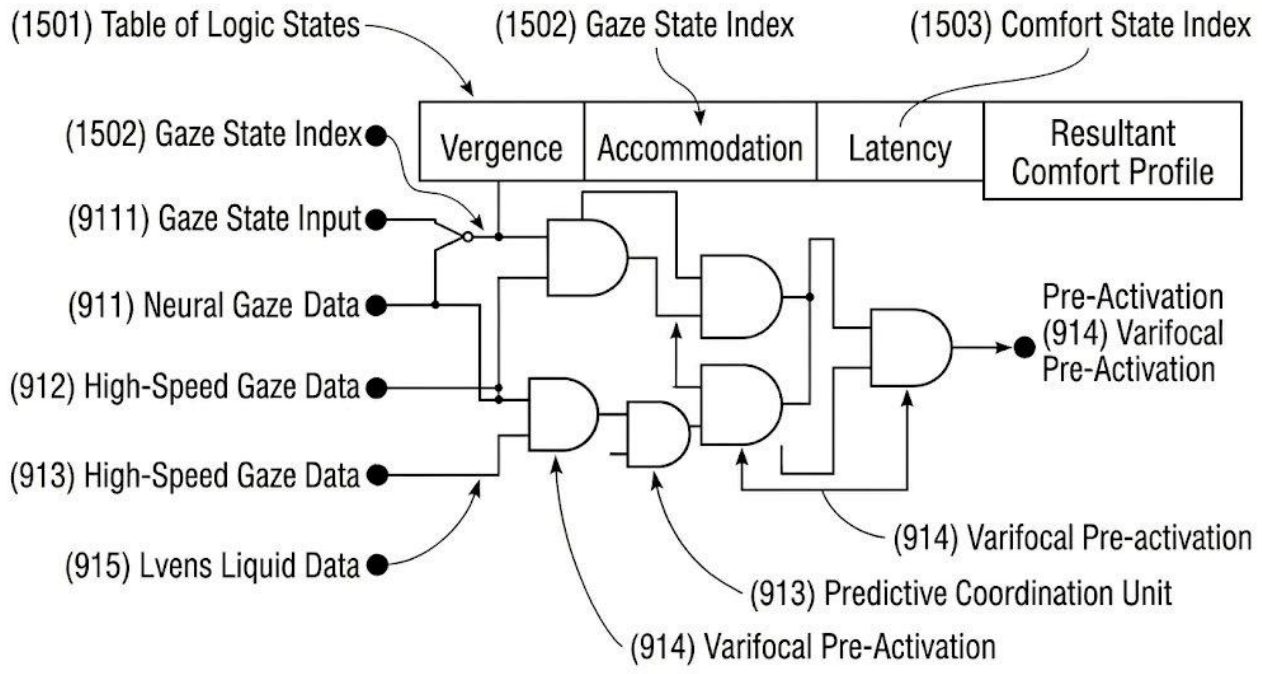

FIG. 14 – Thermal-Throttling Sensor Control Logic & Neural Gaze State Table

7. DETAILED DESCRIPTION OF THE INVENTION

7.1 Headset Architecture (FIG. 1 & FIG. 2)

As shown in FIG. 1 and FIG. 2, the headset housing (10) contains a 10,000Hz high-speed gaze camera (16) and an Infrared LED Ring (14) for eye illumination. The housing accommodates a Micro-OLED display (12) providing high-resolution stereoscopic imagery. The asymmetric varifocal liquid lens assembly (18) is mechanically integrated into the optical path between the display and the user's eye.

The liquid lens (18) employs a conductive fluid (21) and insulating oil (22) separated by a flexible membrane (23). An asymmetric electrode grid (24) applies differential voltages to reshape the fluid interface, thereby altering the effective focal length. This asymmetric configuration enables not only dynamic focus adjustment but also real-time astigmatism correction personalised to individual users.

7.2 Acoustic-Piston Varifocal Actuator (FIG. 3)

FIG. 3 depicts the Acoustic-Piston Varifocal Actuator comprising a Piezo-Electric Ring (31), an Air Chamber (32), a Moving Inner Lens (33), and an Outer Static Lens (34). The piezo-electric ring vibrates at controlled frequencies to generate acoustic pressure pulses within the air chamber, which mechanically displaces the moving inner lens relative to the static outer lens, achieving focal depth changes within sub-5ms response times.

This actuator mechanism is invoked by Thread B of the Parallel Saccade-Accommodation Processing loop (FIG. 6) upon detection of a change in ciliary muscle tension, enabling the focal plane to shift to the predicted depth before the user completes their eye movement.

7.3 High-Speed Dual-Camera Gaze Tracking (FIG. 4)

FIG. 4 illustrates the integrated gaze sensor module (51), which houses two 10,000Hz gaze cameras (16) with an internal optical routing element (52). The dual-camera configuration enables binocular vergence computation — the system calculates the 3D intersection of both optical axes to determine the precise depth at which the user is fixating.

7.4 Predictive Latency Algorithm (FIG. 5)

The Predictive Look-Ahead Latency Algorithm is represented as a matrix architecture in FIG. 5. The Gaze Sensor Input Matrix (611) feeds raw high-frequency gaze data into the Latency-Correction Matrix (612), which compensates for pipeline delays and hardware latency. The Parallax Buffer (613) resolves binocular parallax differences, and the resulting Predicted Gaze & Accommodation Commands (614) are dispatched to the varifocal hardware in anticipation of the user's next fixation.

7.5 Foveated Rendering (FIG. 6 & FIG. 7)

The gaze-aware foveated rendering system, depicted in FIG. 6 and FIG. 7, partitions the display into a High-Detail Foveal Region (701/801) and a Low-Detail Peripheral Region (702/802). The system tracks the moving foveal zone (4) and calculates the Predicted Saccadic Vector (703/803)

to anticipate the next gaze landing point — the Predicted Foveal Destination at t+1ms (704/804). This enables pre-emptive mesh detail allocation before saccade completion, ensuring seamless high-fidelity rendering without perceptible detail transitions.

7.6 Neural-Intent Trigger Mechanism (FIG. 8 & FIG. 14)

FIG. 8 and FIG. 14 illustrate the neural-intent logic circuit. EEG Alpha Wave Input (911), neural gaze data (911), and high-speed gaze data (912, 913) are combined through Intent Detection Logic (912) and Predictive Coordination Units (913) to produce a Varifocal Pre-Activation signal (914). This signal pre-activates the varifocal hardware before the user's conscious gaze shift, reducing perceived latency below the threshold of human perception.

FIG. 14 additionally shows the Table of Logic States (1501) which maps Gaze State Index (1502) and Comfort State Index (1503) across Vergence, Accommodation, and Latency columns to derive the Resultant Comfort Profile for each user state.

7.7 Visual Comfort Profile — VCP (FIG. 9 & FIG. 10)

FIG. 9 depicts the optical geometry of the foveal focal plane system: the Eye (101), Foveal Focal Plane (1011), Accommodation Vector (1012), Varifocal Adjustment Range (1013), Blurred Peripheral Anatomy (1014), and Dynamic/Adaptive Focal Plane (1016) are shown to illustrate how the system dynamically tracks the user's accommodation state and adjusts the physical focal plane accordingly.

FIG. 10 presents the Visual Comfort Profile (VCP) as a 3D data map with axes representing Vergence Vector (1101), Accommodation Vector (1102), and Gaze Latency (1103). The comfort zone (1104) and comfort profile envelope (1103) are mapped within this three-dimensional space to model individual user comfort boundaries. The system continuously monitors the user's real-time state against this profile to issue corrective adjustments.

7.8 Collaborative Multi-User Gaze Mapping (FIG. 11)

FIG. 11 shows the network architecture for collaborative multi-user gaze mapping. Parallel gaze inputs from User A (1201), User B (1202), and User C (1203) are processed through individual Gaze Nodes and aggregated by a Sync Gaze Hub & Aggregator (1204), producing a Unified Gaze & Comfort Map. This enables shared virtual experiences where rendering and focal depth are co-optimised across all participants simultaneously.

7.9 Bio-Acoustic Sensor Placement (FIG. 12)

FIG. 12 presents the bio-acoustic sensor placement on the human hand and wrist. The system integrates a bone-conduction microphone (1311), multiple skin-tap detectors (1312, 1313, 1114, 1115) and a Bio-Acoustic Sensing Element (1312) within a dermal layer (1313). Sub-Dermal Vibration Paths (1313, 1314) carry acoustic signals to the Bio-Dermor Stemen processing unit, which interprets ciliary muscle tension and intent signals used by the Neural-Intent Trigger mechanism. A Surface Haptic Actuator (1311) can also provide tactile feedback.

7.10 MGAD Universal Data Port (FIG. 13)

FIG. 13 shows the MGAD Universal Data Port interface schematic. The Gaze Port Connector (1401) exposes Gaze Power Pins (1402: P11, P12, P13) for power delivery, Gaze Differential Pairs (1403: P14–P17) for high-speed gaze data transmission, a High-Speed Gaze Clock (1404: R18, R19) and a Latency-Correction Pin (1405: SQV). This standardised interface enables interoperability between the invention's gaze engine and third-party display hardware and computing platforms.

8. CLAIMS

I/WE CLAIM:

1. An adaptive gaze-contingent rendering system comprising: an eye-tracking module configured to detect real-time binocular gaze coordinates at a sampling rate of at least 10,000Hz; a processing engine configured to calculate 3D depth maps from the detected gaze coordinates; and a varifocal assembly characterised in that it aligns the physical focal plane with the depth map coordinates in real-time with a latency of less than 5 milliseconds.
2. The system as claimed in Claim 1, wherein the varifocal assembly comprises an Asymmetric Electrode Liquid Lens (AELL) having a conductive fluid layer, an insulating oil layer, a flexible membrane, and an asymmetric electrode grid configured to reshape the fluid interface for both focal length adjustment and real-time astigmatism correction.
3. The system as claimed in Claim 1 or Claim 2, further comprising an Acoustic-Piston Varifocal Actuator incorporating a piezo-electric ring, an air chamber, a moving inner lens, and an outer static lens, wherein the actuator achieves focal depth changes within a sub-5ms response window.
4. The system as claimed in any preceding claim, further comprising a Neural-Intent Trigger mechanism that fuses EEG alpha wave data, neural gaze data, and high-speed camera gaze data through an Intent Detection Logic circuit to generate a Varifocal Pre-Activation signal prior to the completion of a user eye movement.
5. The system as claimed in any preceding claim, further comprising a Predictive Look-Ahead Latency Algorithm comprising a Gaze Sensor Input Matrix, a Latency-Correction Matrix, and a Parallax Buffer, wherein the algorithm generates predicted gaze and accommodation commands dispatched in anticipation of user fixation.
6. The system as claimed in any preceding claim, further comprising a gaze-aware foveated rendering engine configured to partition the display field into a high-detail foveal region and a low-detail peripheral region, wherein the system computes a predicted saccadic vector to pre-allocate mesh detail at the predicted foveal destination at t+1ms.
7. The system as claimed in any preceding claim, further comprising a Visual Comfort Profile (VCP) data module mapping individual user comfort boundaries across a three-dimensional space defined by Vergence Vector, Accommodation Vector, and Gaze Latency axes.
8. The system as claimed in any preceding claim, further comprising a collaborative multi-user gaze mapping architecture wherein individual user gaze nodes feed into a Sync Gaze Hub & Aggregator to produce a Unified Gaze & Comfort Map shared across concurrent users.
9. The system as claimed in any preceding claim, further comprising a bio-acoustic sensing subsystem incorporating bone-conduction microphones and skin-tap detectors positioned on the user's hand and wrist, wherein sub-dermal vibration signals are processed to derive ciliary muscle tension data for predictive focal actuation.
10. The system as claimed in any preceding claim, further comprising an MGAD Universal Data Port providing a standardised interface with gaze power pins, high-speed gaze differential pairs, a gaze clock, and a latency-correction pin, enabling interoperability with third-party VR/AR display hardware.

9. ABSTRACT

The present invention discloses an Adaptive Gaze-Contingent Rendering System for real-time mitigation of Vergence-Accommodation Conflict (VAC) in Extended Reality (XR) environments. The system integrates a 10,000Hz dual-camera eye-tracking module, an Asymmetric Electrode Liquid Lens (AELL), an Acoustic-Piston Varifocal Actuator, a Neural-Intent Trigger mechanism fusing EEG and bio-acoustic ciliary signals, and a Predictive Look-Ahead Latency Algorithm to achieve sub-5ms physical focal plane adjustment aligned with the user's instantaneous vergence state. Additional subsystems include a gaze-aware foveated rendering engine with predictive saccadic vector computation, a Visual Comfort Profile (VCP) mapping module, a collaborative multi-user gaze aggregation network, a bio-acoustic sensor suite for hand-worn intent capture, and an MGAD Universal Data Port for third-party interoperability. By resolving VAC at its physiological root cause through hardware-software co-design, the invention ensures natural ocular behaviour, significantly reduces fatigue, and enhances immersive presence in VR, AR, and mixed reality applications. The system is equally applicable to precision use cases such as surgical visualisation and professional simulation.

Dated this 8th Day of April, 2026.

_____

Signature of Applicant(s)