ANNEXURE – PROMPTS FOR GENERATION OF DRAWINGS

FIG. 1: Asymmetric Varifocal Liquid Lens & Headset Architecture (ComponentView)

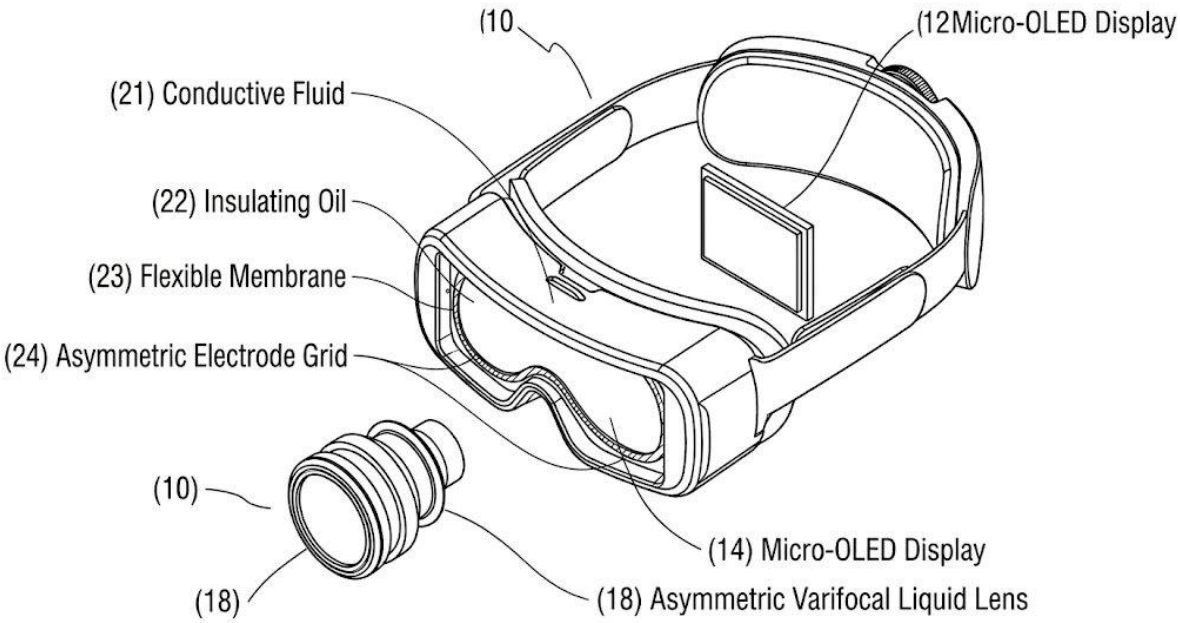

Technical patent-style diagram of a VR headset cross-section showing micro-OLED display,

asymmetric varifocal liquid lens, conductive fluid and insulating oil layers, flexible membrane, and

asymmetric electrode grid. Include labeled components, clean vector lines, monochrome blueprint

style, high precision engineering illustration.

FIG. 2: Adaptive Headset Architecture with Infrared LED Ring & Gaze Camera

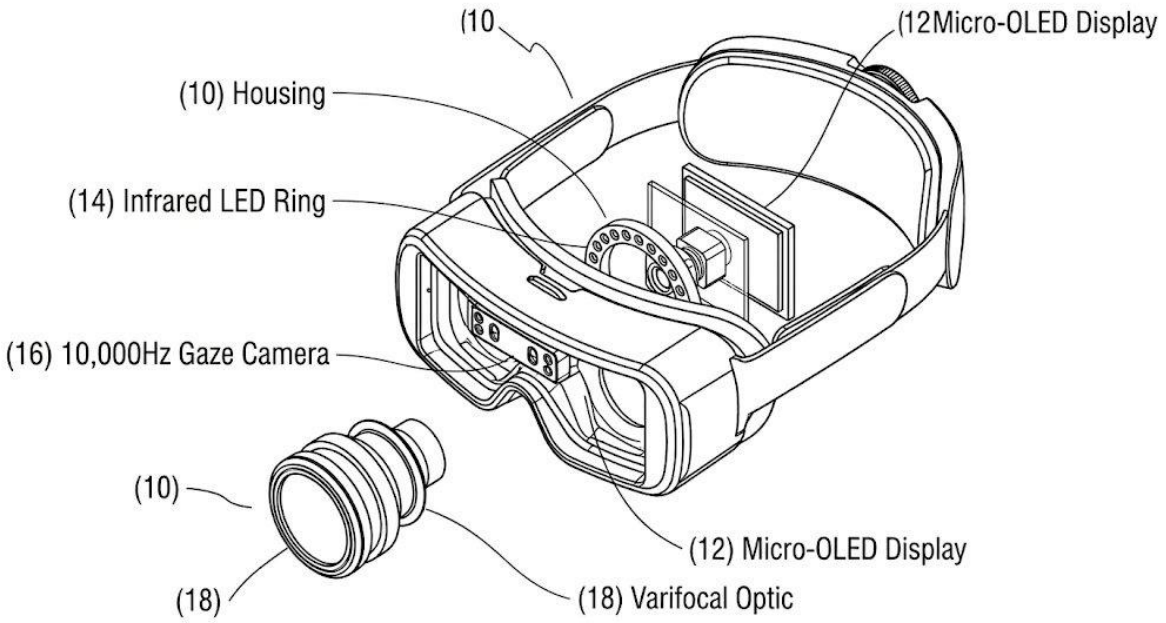

Detailed schematic of VR headset front interior showing infrared LED ring surrounding eye,

high-speed gaze tracking camera, optical path, and housing structure. Use labeled components,

patent drawing style, minimal shading, clean line art.

FIG. 3: Acoustic-Piston Varifocal Actuator (Piezo-Electric Ring Assembly)

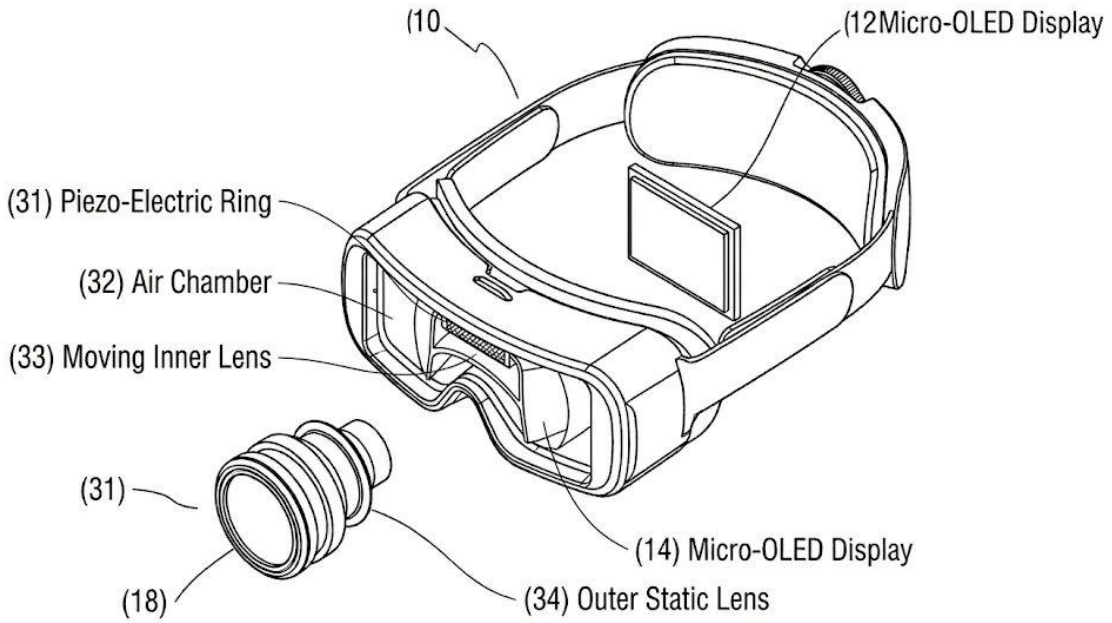

Engineering diagram of acoustic-piston varifocal actuator with piezo-electric ring, air chamber,

moving inner lens, and static outer lens. Show vibration-induced pressure movement arrows.

Patent illustration style, cross-sectional view, labeled components.

FIG. 4: Dual-Camera 10,000Hz Tracking Path with Integrated Gaze Sensor

Module

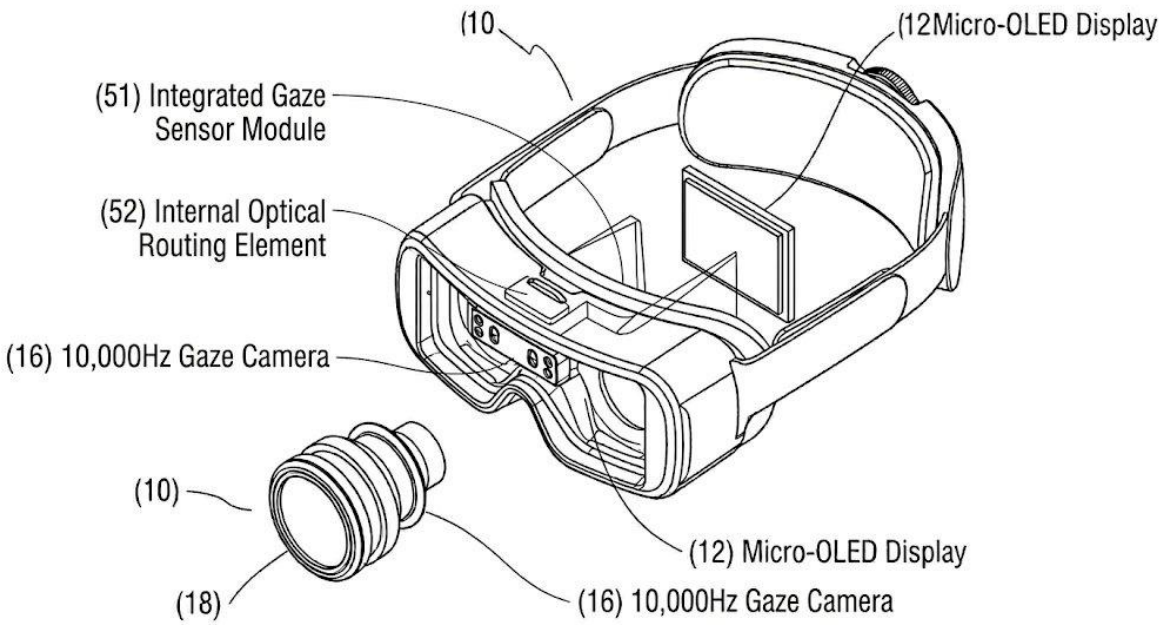

Technical diagram showing dual-camera eye tracking system with two high-speed cameras, optical

routing element, and gaze convergence point forming 3D depth intersection. Include arrows

showing gaze vectors. Clean schematic, labeled, patent style.

FIG. 5: Predictive Look-Ahead Latency Algorithm Matrix

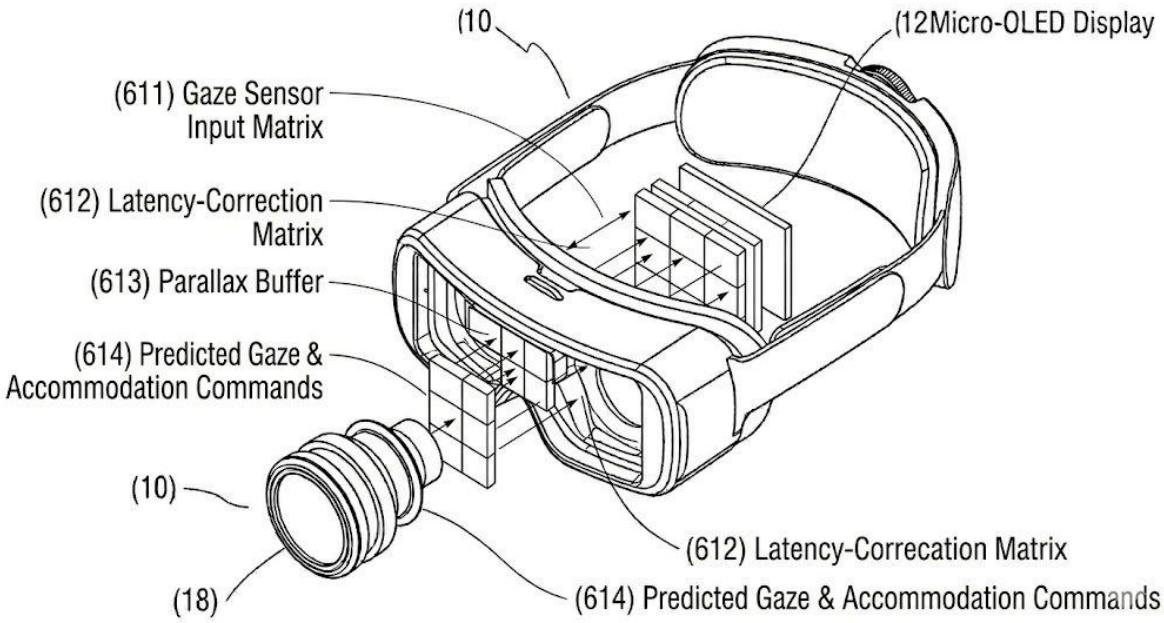

Abstract technical diagram of matrix-based predictive algorithm showing gaze input matrix, latency

correction matrix, parallax buffer, and predicted output signals. Use block diagram style with

arrows, grids, and labeled data flow.

FIG. 6: Gaze-Aware Foveated Mesh Simplification Levels

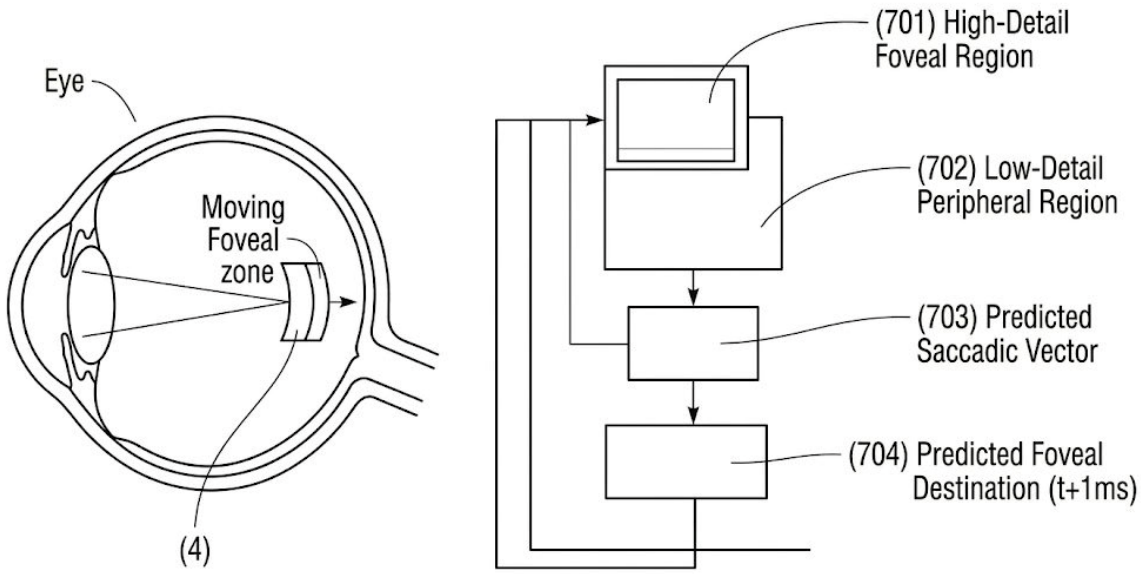

Diagram of human eye with highlighted foveal region and peripheral vision zones, showing

high-detail vs low-detail mesh regions. Include gaze point and labeled anatomical features.

Scientific illustration meets technical schematic.

FIG. 7: Gaze-Aware Foveated Mesh 3D Representation

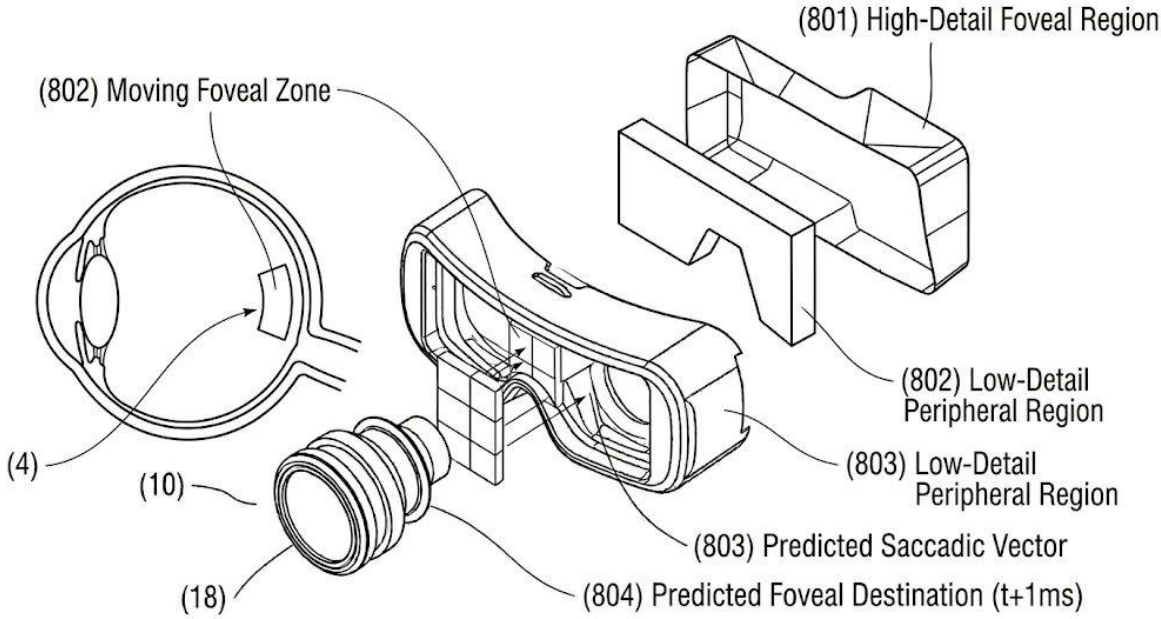

3D visualization of gaze-aware rendering showing current gaze point, predicted saccadic vector,

and future focal region. Include mesh detail gradients and directional arrows. Futuristic technical

rendering, clean and labeled.

FIG. 8: Neural-Intent Trigger Mechanism Logic Circuit

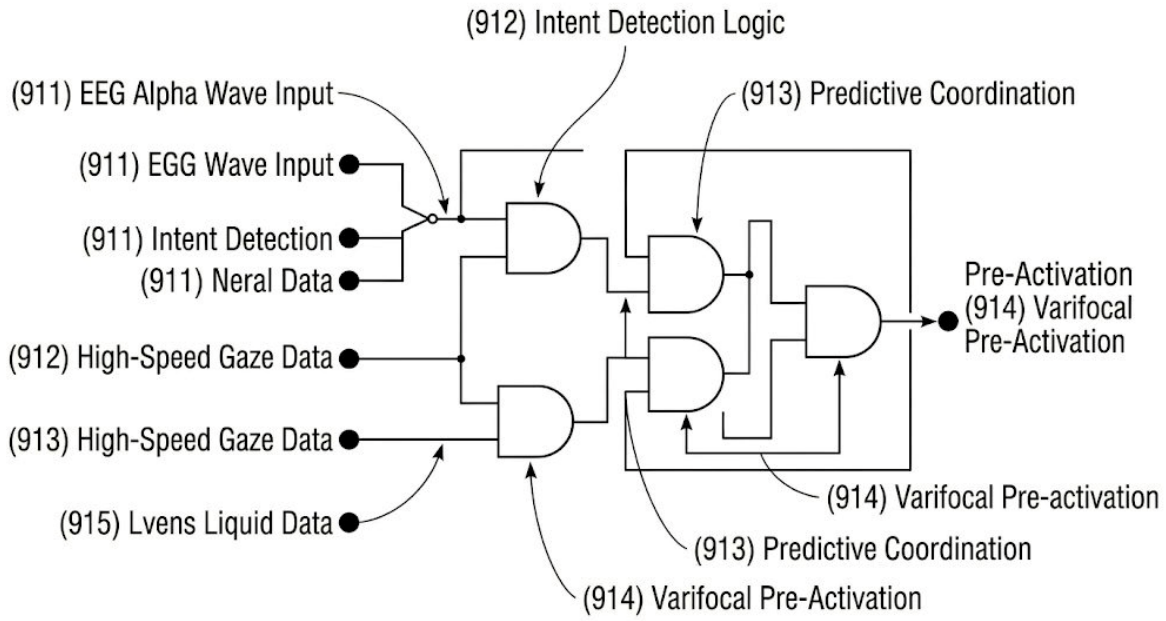

Circuit-style diagram showing EEG inputs, gaze data inputs, neural processing blocks, and output

signal for varifocal pre-activation. Use logic gates, signal arrows, and labeled modules in patent

schematic style.

FIG. 9: Foveal Focal Plane and Accommodation Vector Diagram

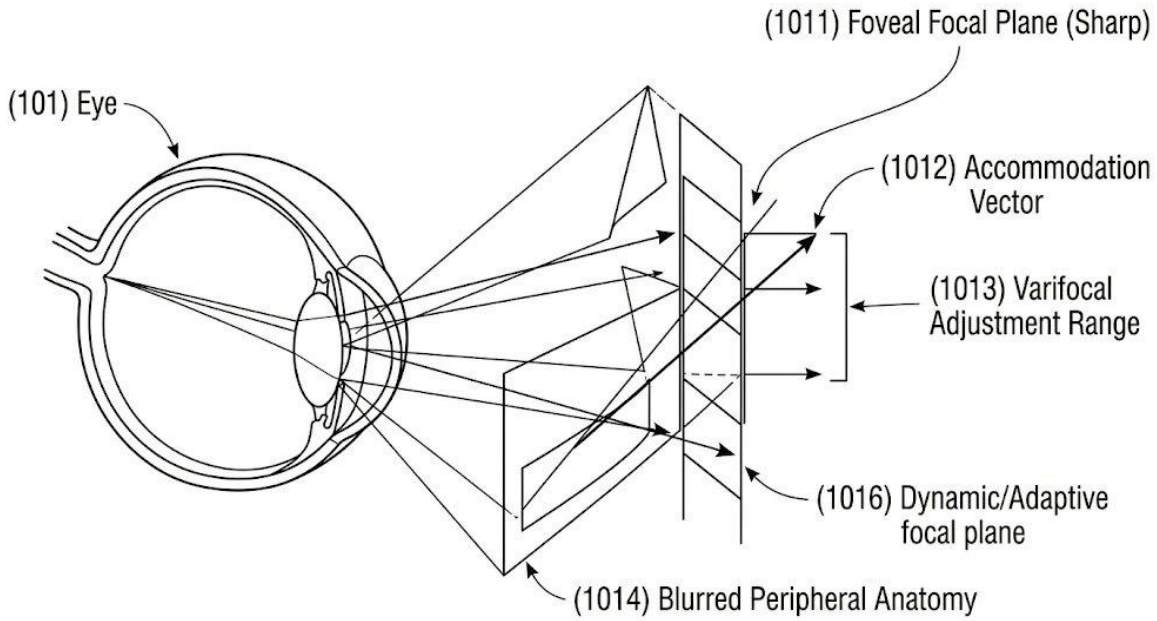

Optical diagram of human eye showing focal plane, accommodation vector, dynamic focal

adjustment range, and blurred peripheral regions. Include rays of light and focal shift visualization.

Scientific + patent illustration style.

FIG. 10: Visual Comfort Profile (VCP) 3D Data Map

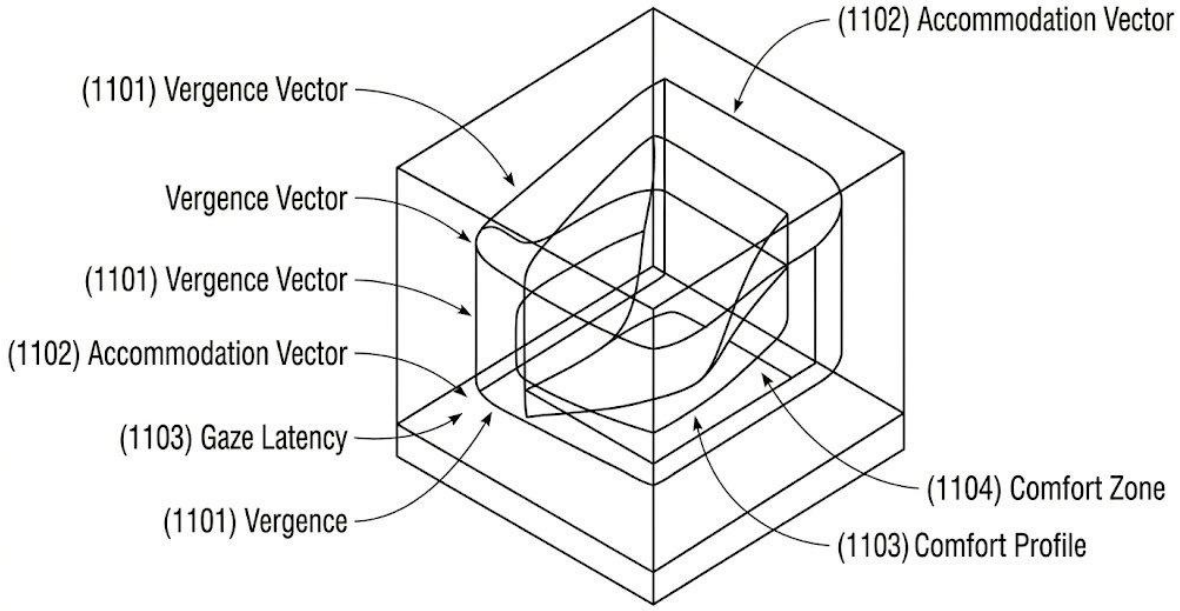

3D graph showing axes for vergence, accommodation, and latency, with a highlighted comfort zone

region. Include smooth surface or volume representing comfort profile envelope. Clean technical

visualization.

FIG. 11: Collaborative Multi-User Gaze Mapping Network Architecture

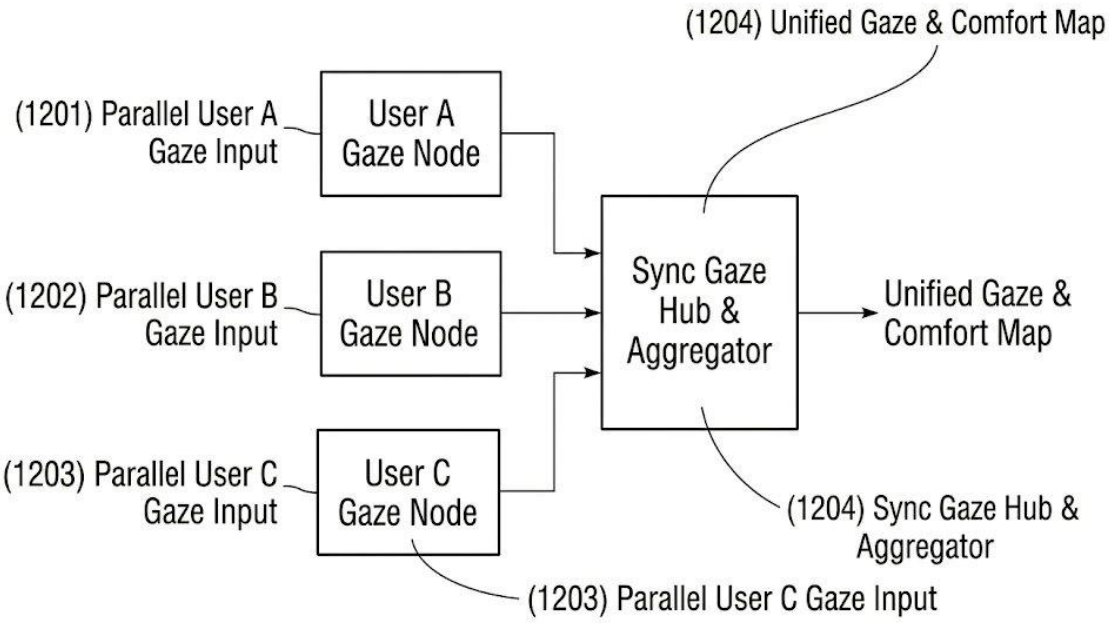

Network architecture diagram showing multiple users connected to a central gaze aggregation hub.

Include nodes, connections, and unified output map. Modern system diagram style, labeled

components.

FIG. 12: Bio-Acoustic Sensor Placement on Human Anatomy

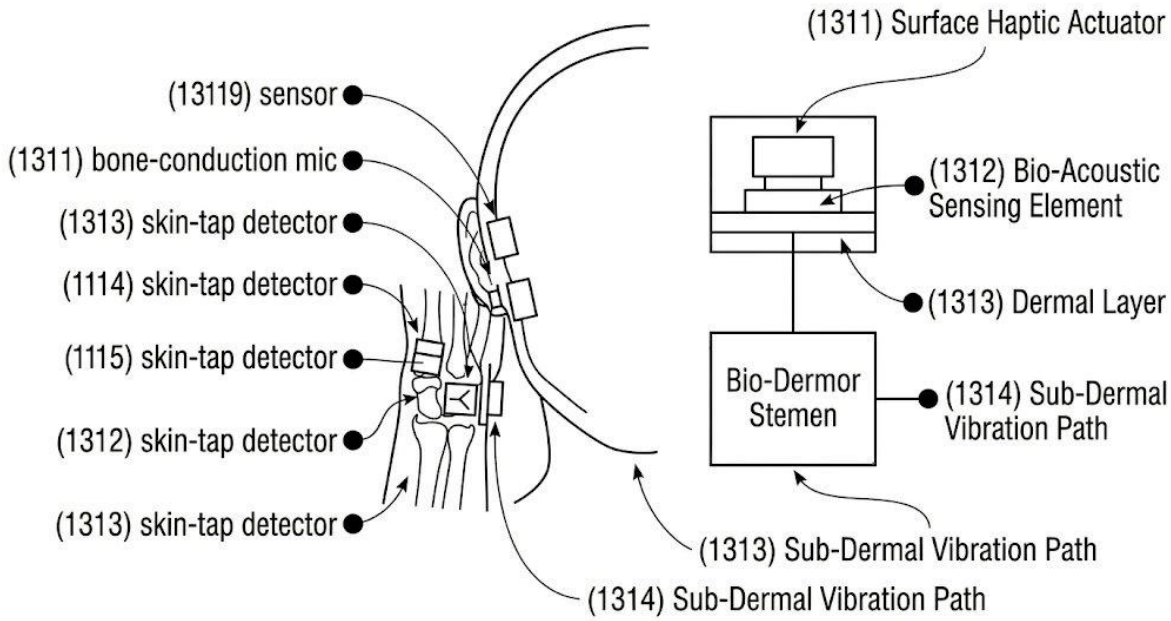

Anatomical diagram of human hand and wrist showing placement of bone-conduction microphone,

skin-tap sensors, and vibration paths. Include labeled dermal layers and signal flow arrows.

Scientific schematic style.

FIG. 13: MGAD Universal Data Port Interface Schematic

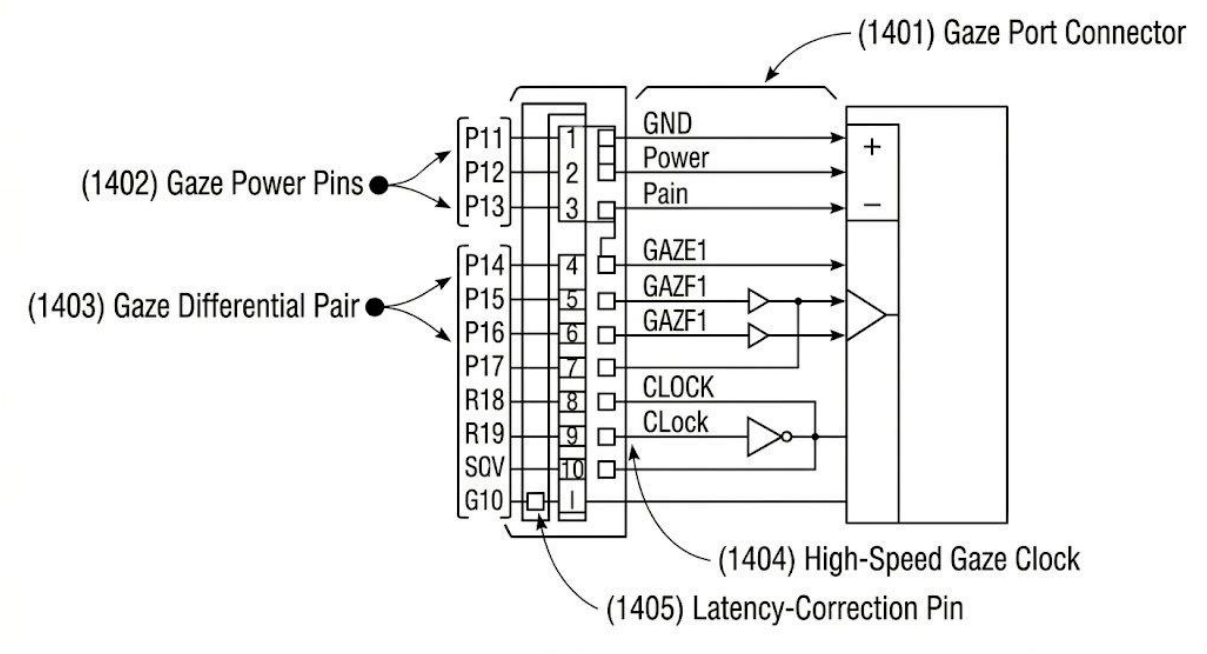

Technical connector diagram showing data port with labeled pins for power, differential pairs, clock

signals, and latency correction. Clean electronics schematic, patent-style line drawing.

FIG. 14: Thermal-Throttling Sensor Control Logic & Neural Gaze State Table

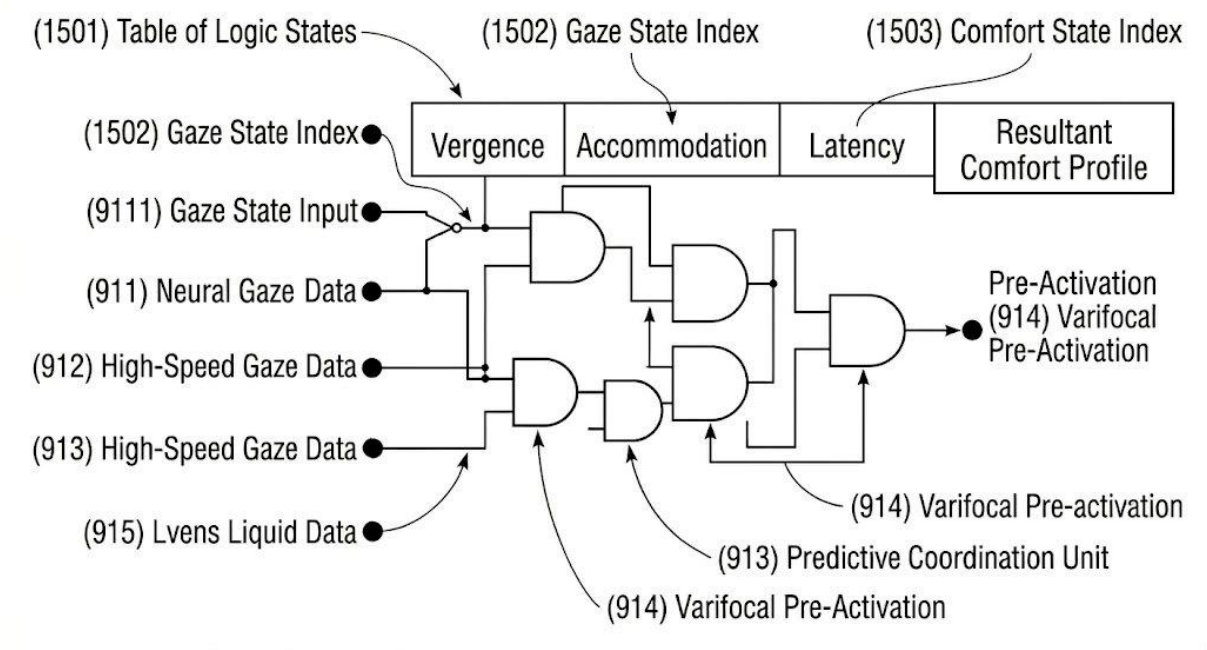

Hybrid diagram combining logic circuit and tabular data showing gaze state index, comfort state

index, and system outputs. Include table + logic flow arrows. Structured patent-style visualization.