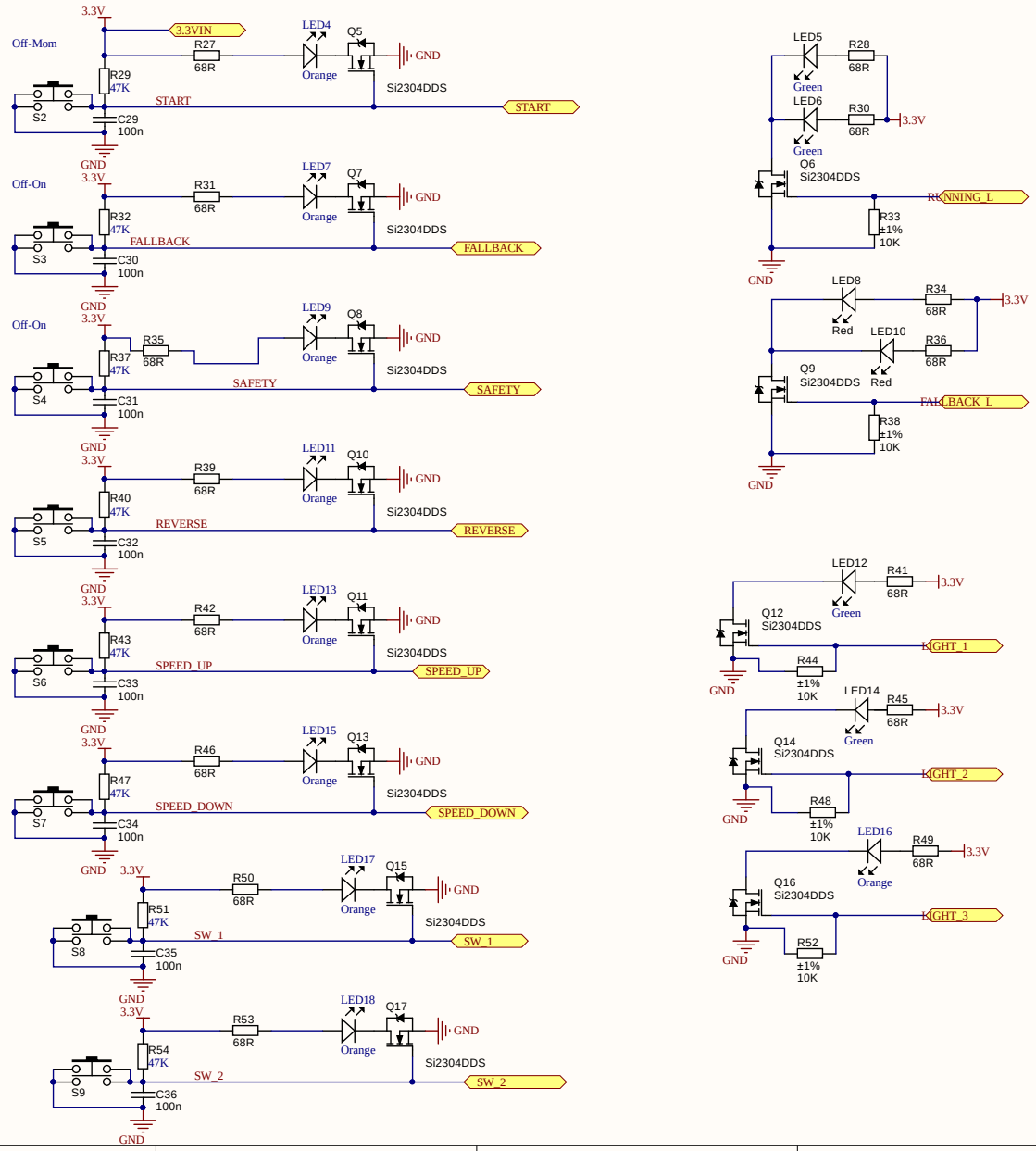

Title		
Size B	Number	Revision
Date: 11/1/2017	Sheet of	
File: C:\Users\..\Buttons and Switches.SchDoc	Drawn By:	