Clock and Reset

File: clock_and_reset.kicad_sch

CPU and Bus Transceivers

File: cpu_and_bus_transceivers.kicad_sch

Gate Arrays

File: gate_arrays.kicad_sch

Dynamic RAM

File: dynamic_ram.kicad_sch

ROM

File: roms.kicad_sch

Character Generator

File: character_generator.kicad_sch

Connector to the Power Supply Board and Linear Board.

The Power Supply Board has the region-specific 110V or 220V power supply that generates the +5V and +12V DC supplies for the motherboard.

The Linear Board has the PAL/NTSC encoder, speaker out, and cassette.

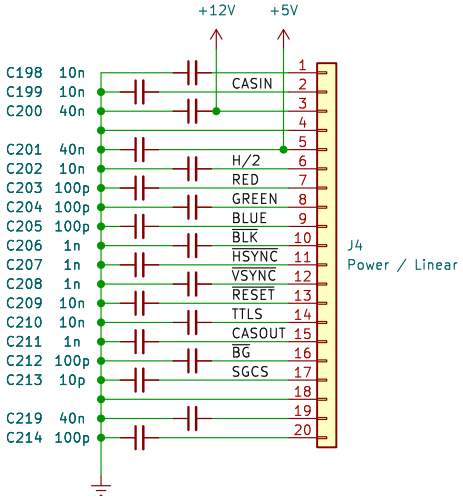

Keyboard Interface

File: keyboard.kicad_sch

Printer Interface

File: printer.kicad_sch

Sound Generator and Game Port

File: sound_and_game.kicad_sch

Expansion Connectors

File: expansion.kicad_sch

RS232 Interface

File: rs232.kicad_sch

Schematic Redrawn by Rhys Weatherley

Video Technology Ltd.

Sheet: /
File: Dick_Smith_Cat_Motherboard.kicad_sch

Title: Dick Smith Cat – Motherboard

Size: A4	Date: 1984	**Rev:**
KiCad E.D.A. 8.0.9		Id: 1/12

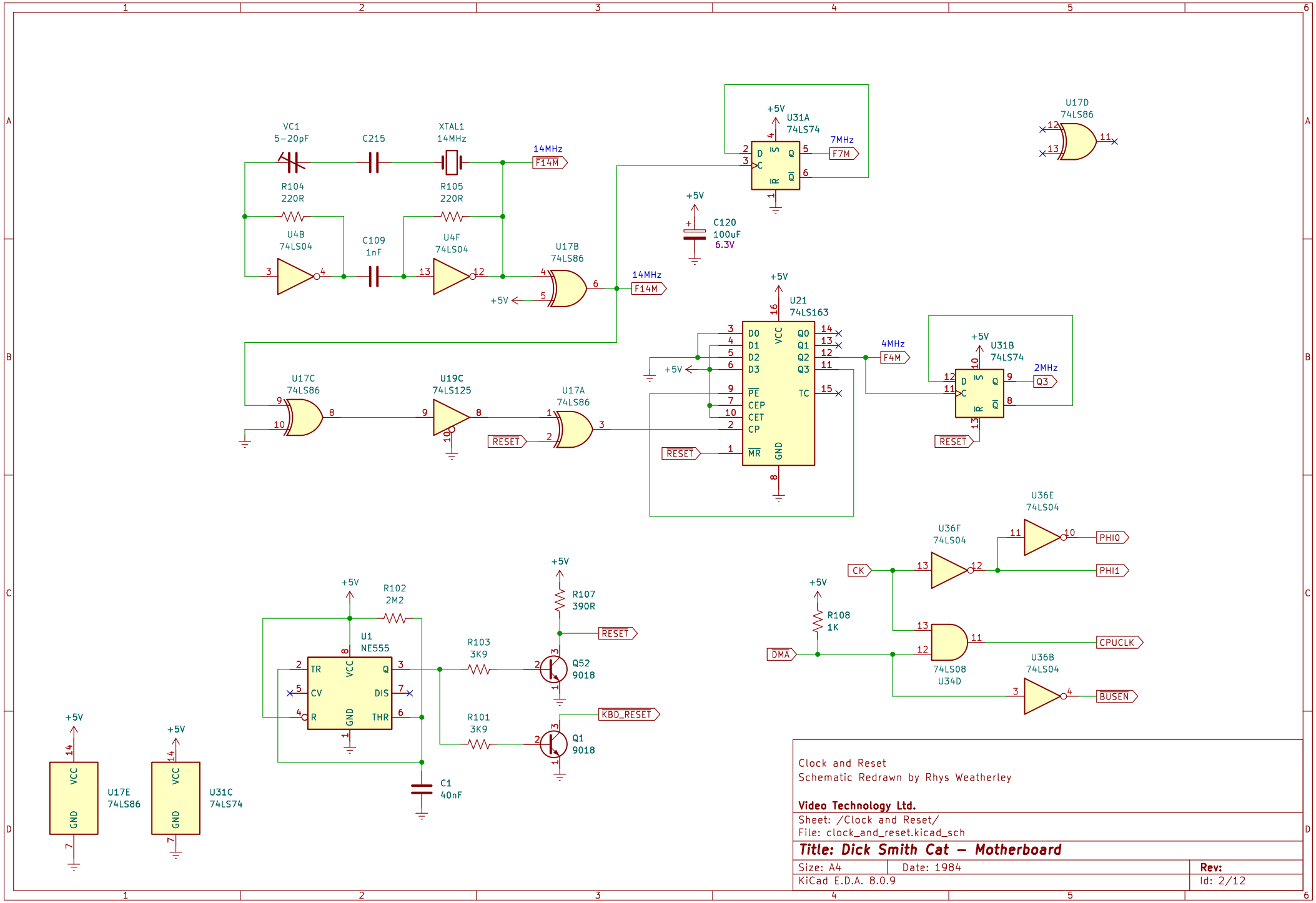

Clock and Reset
Schematic Redrawn by Rhys Weatherley

Video Technology Ltd.

Sheet: /Clock and Reset/
File: clock_and_reset.kicad_sch

Title: Dick Smith Cat – Motherboard

Size: A4	Date: 1984	**Rev:**
KiCad E.D.A. 8.0.9		Id: 2/12

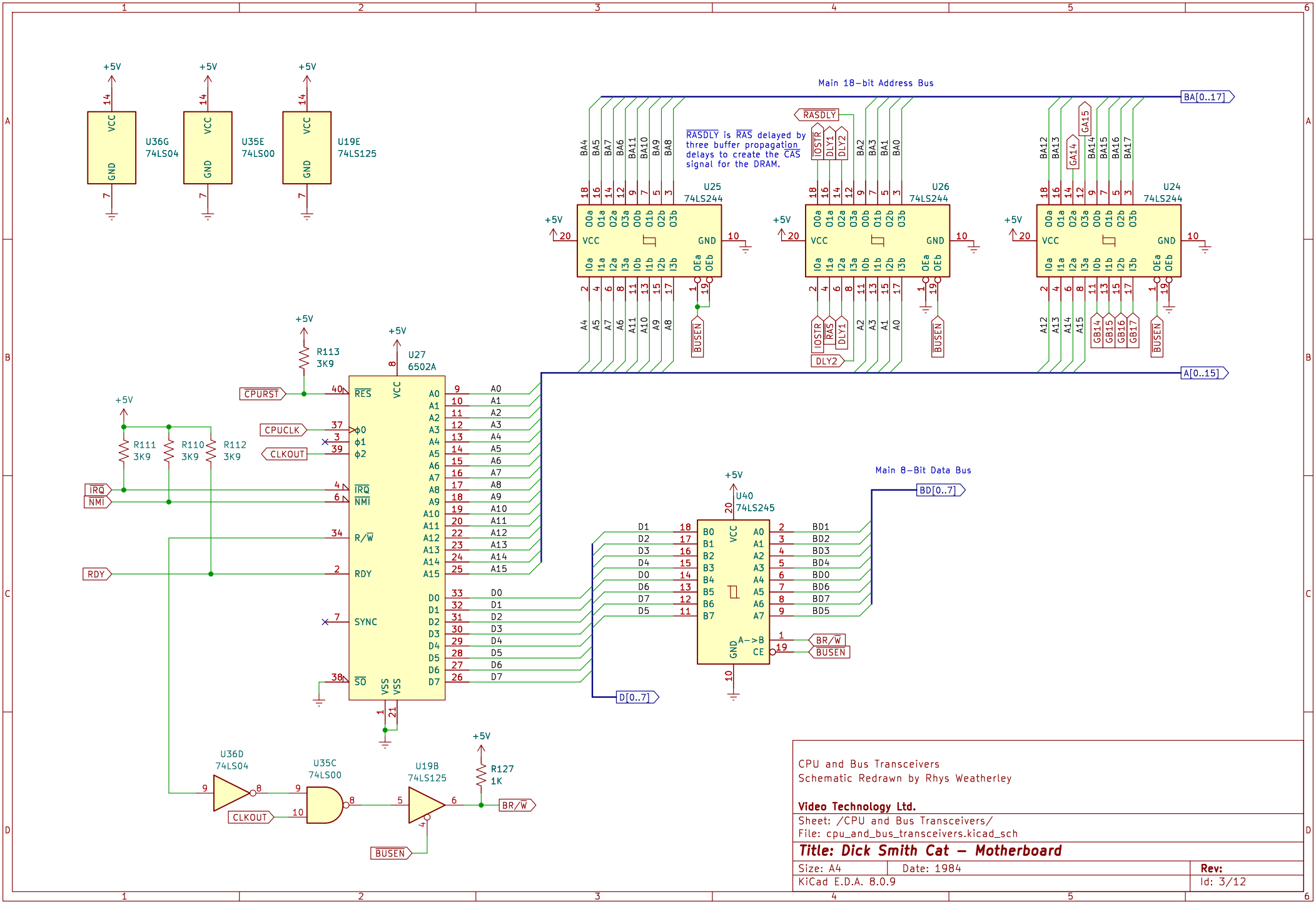
U36G
74LS04
U35E
74LS00
U19E
74LS125
Main 18-bit Address Bus
BA[0..17]
RASDLY
RASDLY is RAS delayed by three buffer propagation delays to create the CAS signal for the DRAM.
U25
74LS244
U26
74LS244
U24
74LS244
BUSEN
A[0..15]
R113
3K9
U27
6502A
CPURST
CPUCLK
CLKOUT
R111
3K9
R110
3K9
R112
3K9
IRQ
NMI
RDY
Main 8-Bit Data Bus
BD[0..7]
U40
74LS245
D[0..7]
BR/W
U36D
74LS04
U35C
74LS00
U19B
74LS125
R127
1K
CPU and Bus Transceivers
Schematic Redrawn by Rhys Weatherley
Video Technology Ltd.
Sheet: /CPU and Bus Transceivers/
File: cpu_and_bus_transceivers.kicad_sch
Title: Dick Smith Cat – Motherboard
Size: A4
Date: 1984
Rev:
KiCad E.D.A. 8.0.9
Id: 3/12

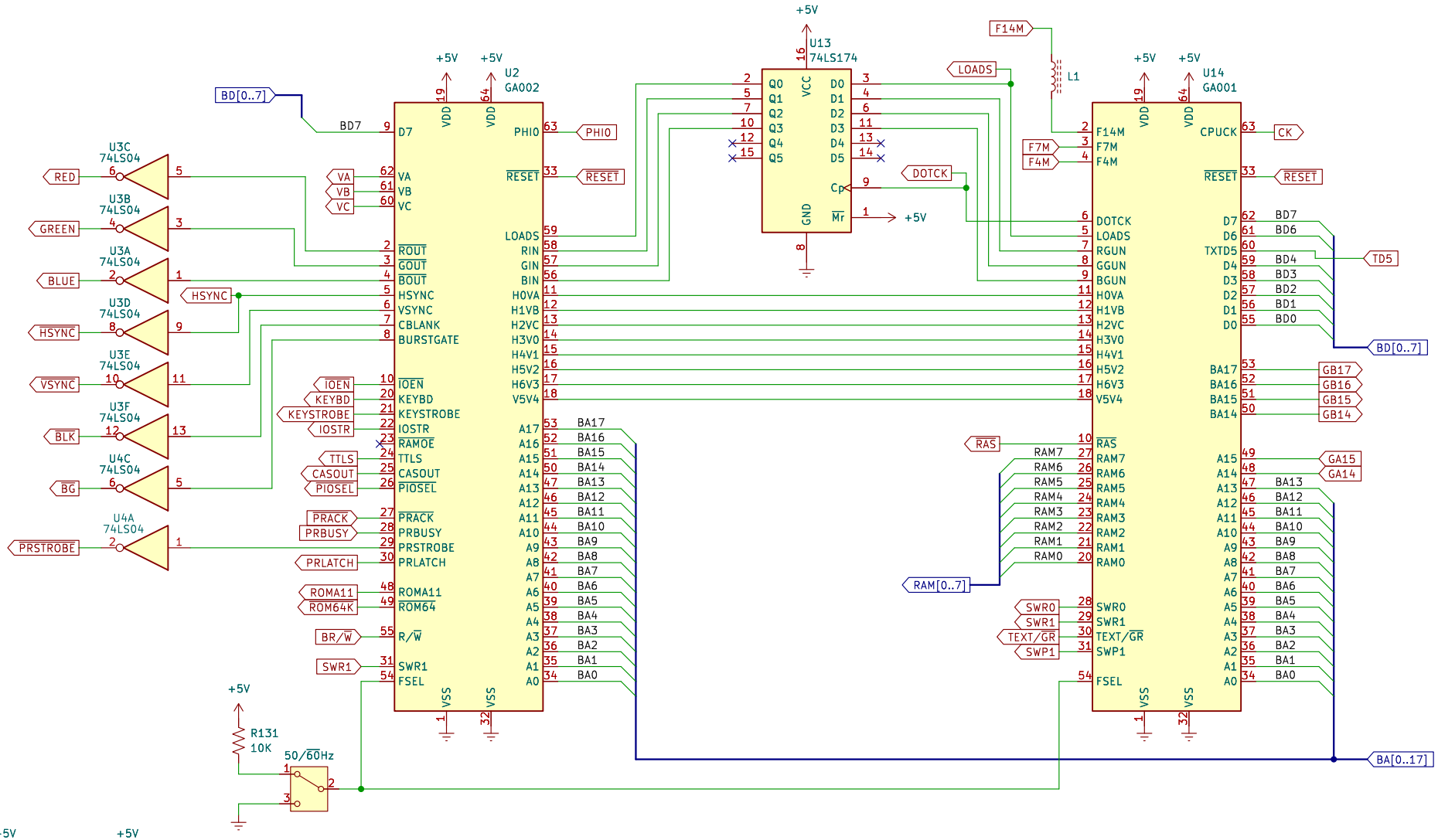

Gate Array 1 (U14)
- Memory Banking
- Dynamic RAM Addressing
- Video RAM Addressing
- Video Mode Selection

Gate Array 2 (U2)
- Chip Selects
- Printer Control Signals
- Video Signal Generation

Gate Arrays
Schematic Redrawn by Rhys Weatherley

Video Technology Ltd.

Sheet: /Gate Arrays/
File: gate_arrays.kicad_sch

Title: Dick Smith Cat – Motherboard

Size: A4	Date: 1984	Rev:
KiCad E.D.A. 8.0.9		Id: 4/12

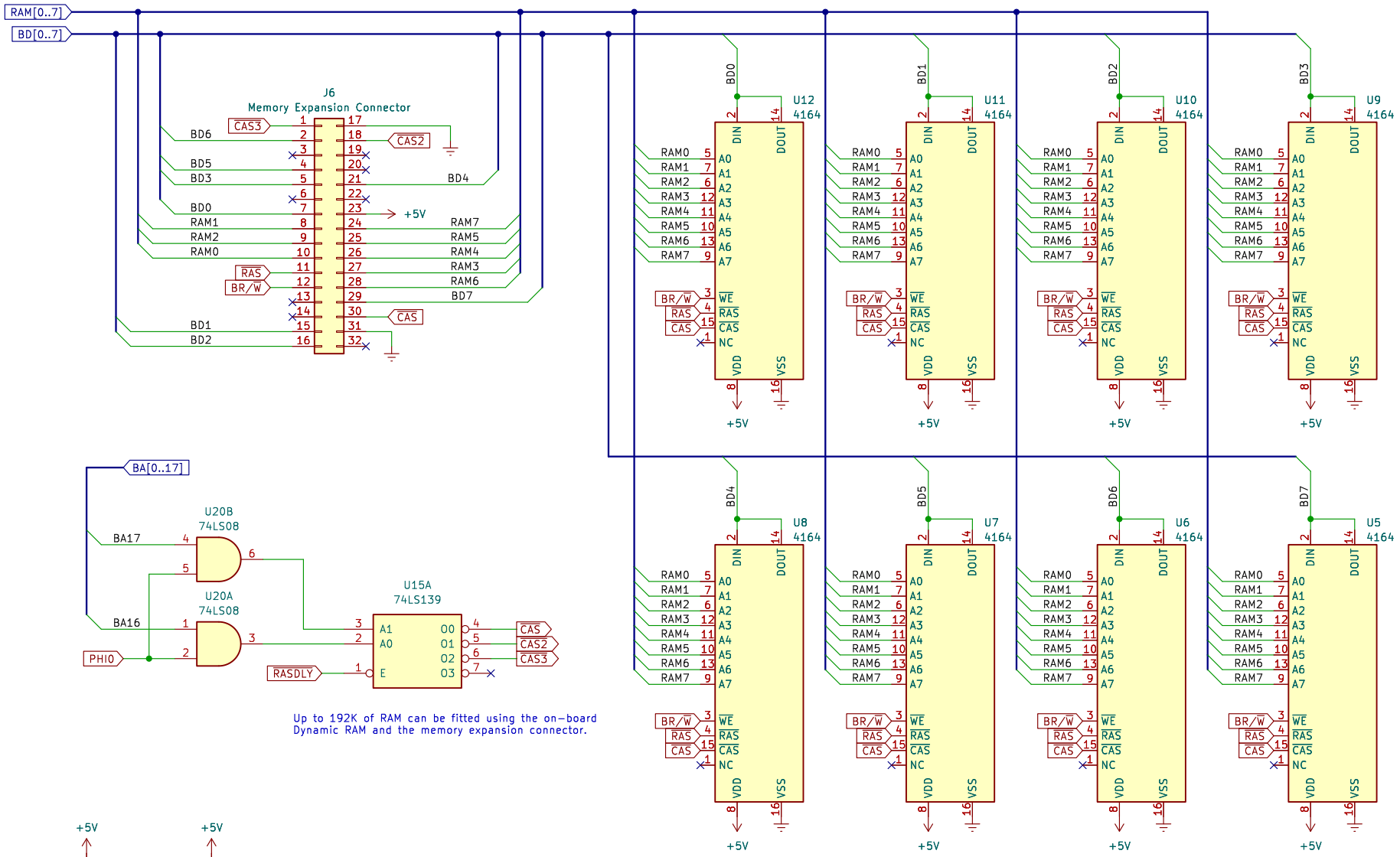

Up to 192K of RAM can be fitted using the on-board Dynamic RAM and the memory expansion connector.

Dynamic RAM
Schematic Redrawn by Rodney Weatherley
6th of December 2023 00:00:00 GMT

Video Technology Ltd.

Sheet: /Dynamic RAM/
File: dynamic_ram.kicad_sch

Title: Dick Smith Cat – Motherboard

Size: A4	Date: 1984	**Rev:**
KiCad E.D.A. 8.0.9		Id: 5/12

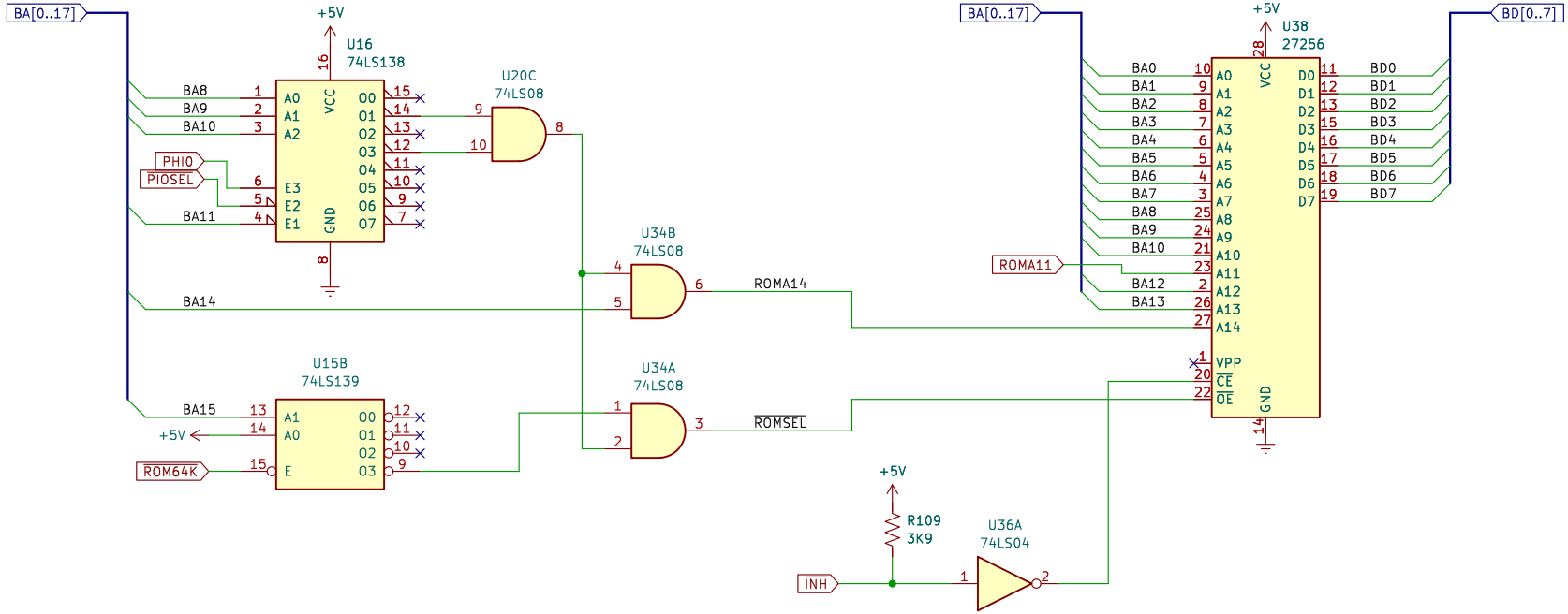

INH allows expansion boards or cartridges to inhibit the on-board ROM and replace it.

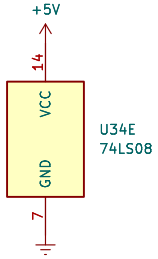

ROM
Schematic Redrawn by Rhys Weatherley

Video Technology Ltd.

Sheet: /ROM/
File: roms.kicad_sch

Title: Dick Smith Cat – Motherboard

Size: A4	Date: 1984	**Rev:**
KiCad E.D.A. 8.0.9		Id: 6/12

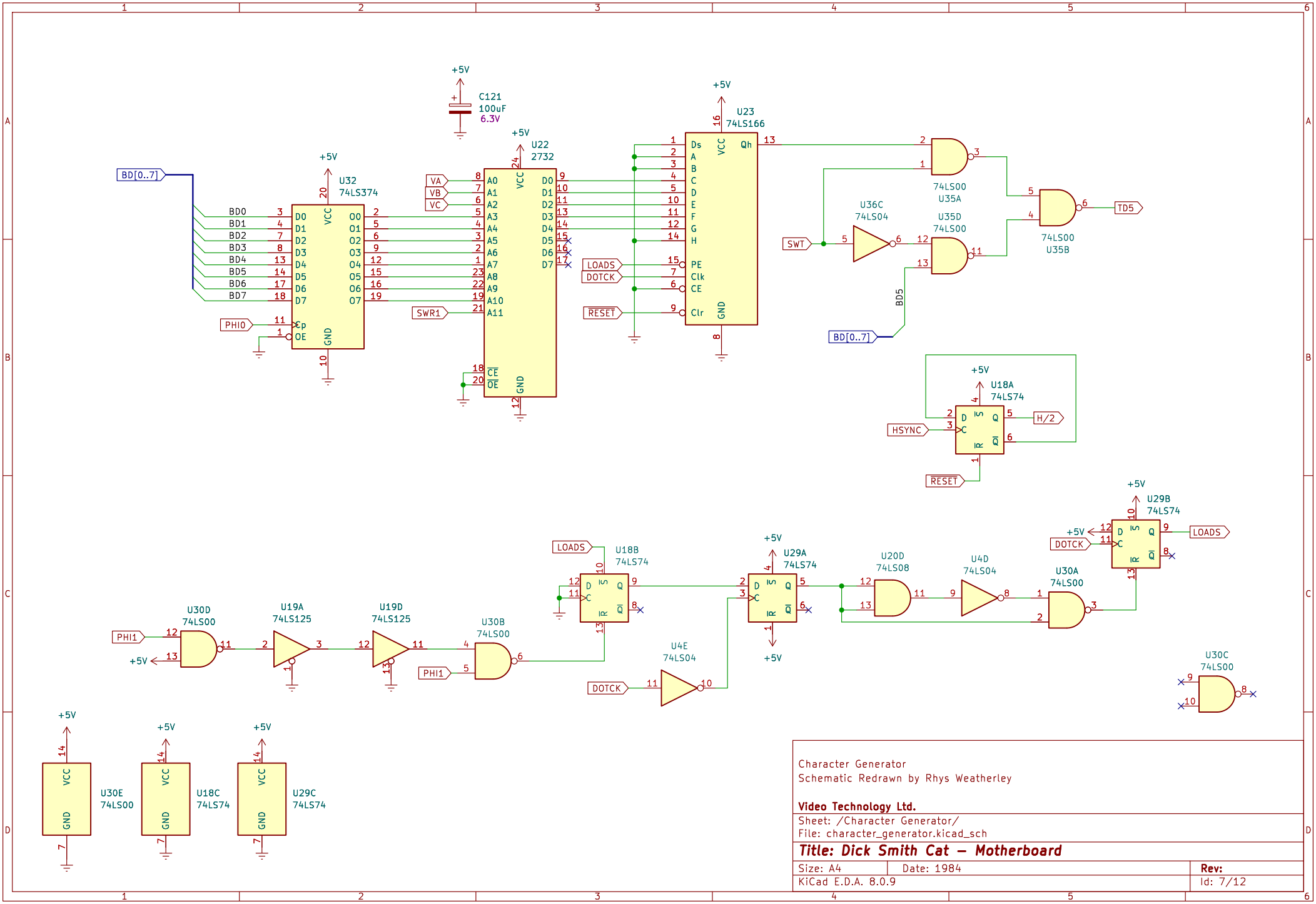

Character Generator
Schematic Redrawn by Rhys Weatherley

Video Technology Ltd.

Sheet: /Character Generator/
File: character_generator.kicad_sch

Title: Dick Smith Cat – Motherboard

Size: A4	Date: 1984	**Rev:**
KiCad E.D.A. 8.0.9		Id: 7/12

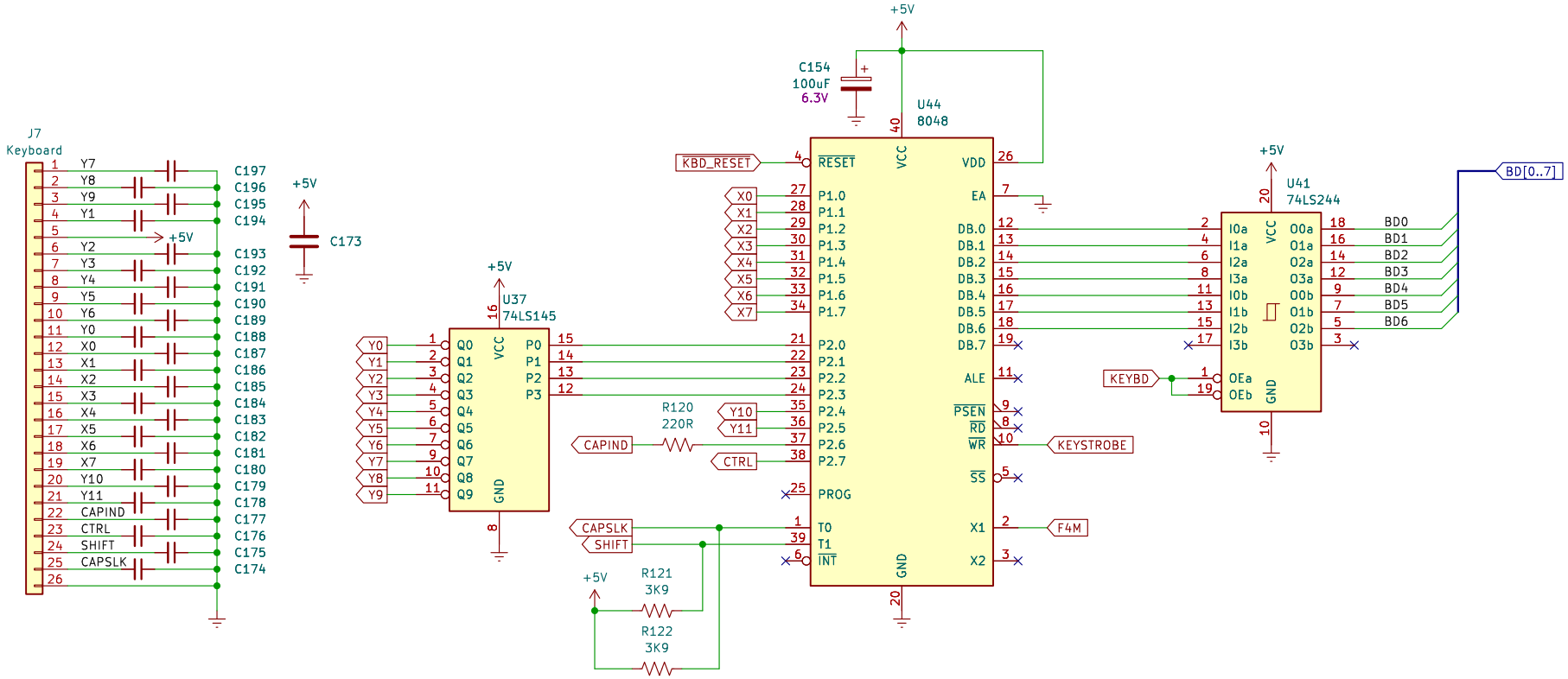

Keyboard Interface
Schematic Redrawn by Rhys Weatherley

Video Technology Ltd.

Sheet: /Keyboard Interface/
File: keyboard.kicad_sch

Title: Dick Smith Cat – Motherboard

Size: A4	Date: 1984	**Rev:**
KiCad E.D.A. 8.0.9		Id: 8/12

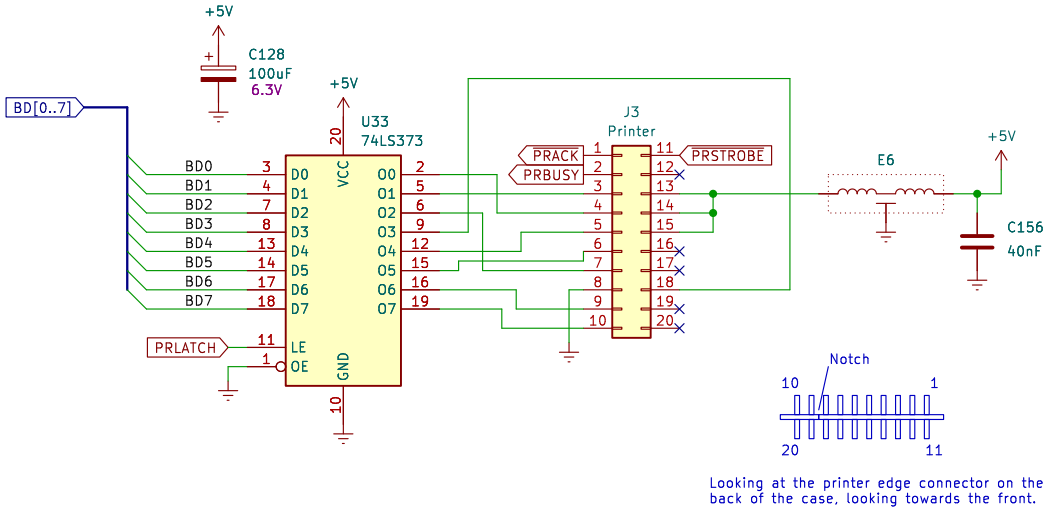

Printer Interface
Schematic Redrawn by Rhys Weatherley

Video Technology Ltd.

Sheet: /Printer Interface/
File: printer.kicad_sch

Title: Dick Smith Cat – Motherboard

Size: A4	Date: 1984	**Rev:**
KiCad E.D.A. 8.0.9		Id: 9/12

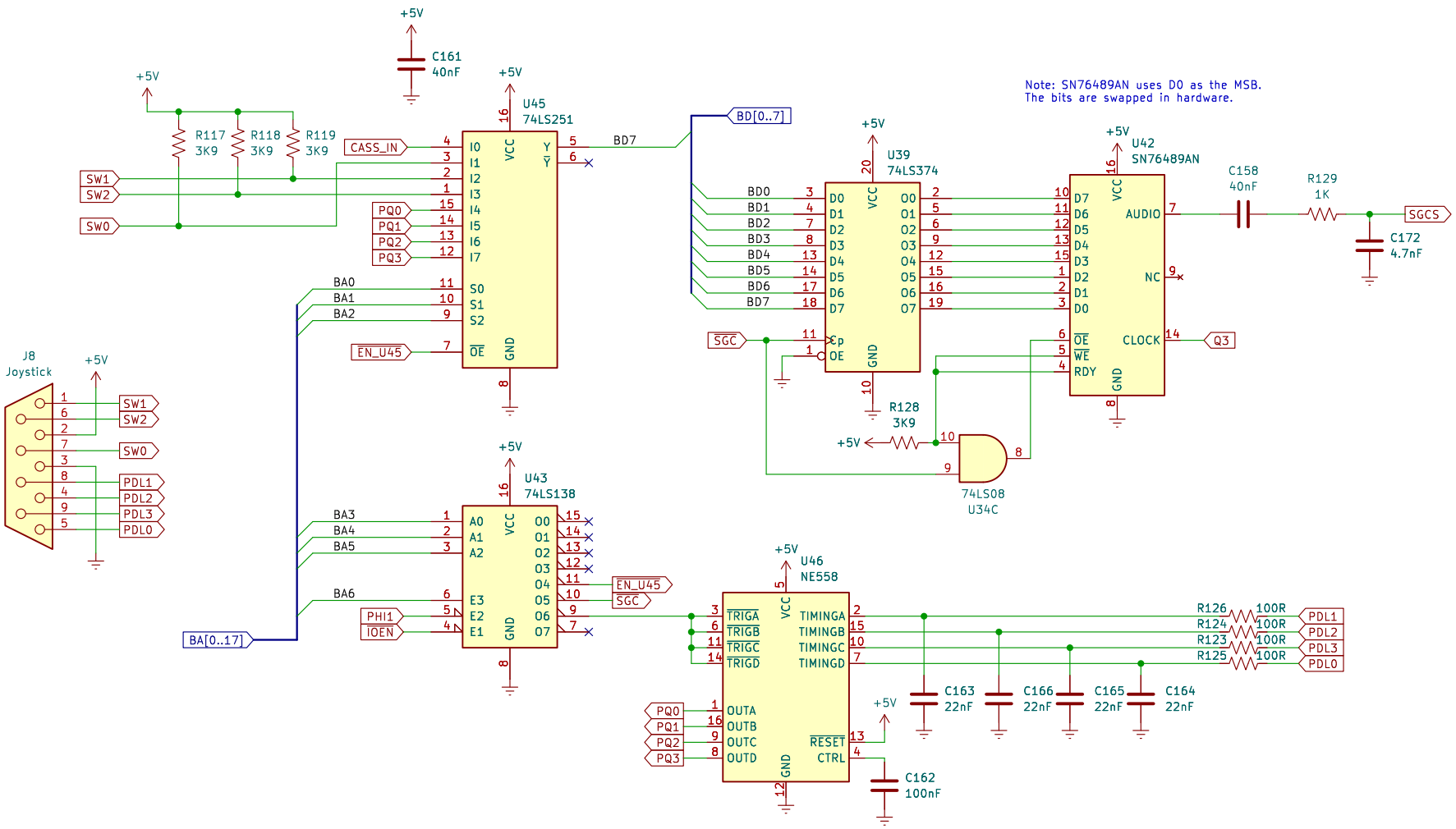

Sound Generator and Game Port
Schematic Redrawn by Rhys Weatherley

Video Technology Ltd.

Sheet: /Sound Generator and Game Port/
File: sound_and_game.kicad_sch

Title: Dick Smith Cat – Motherboard

Size: A4	Date: 1984	**Rev:**
KiCad E.D.A. 8.0.9		Id: 10/12

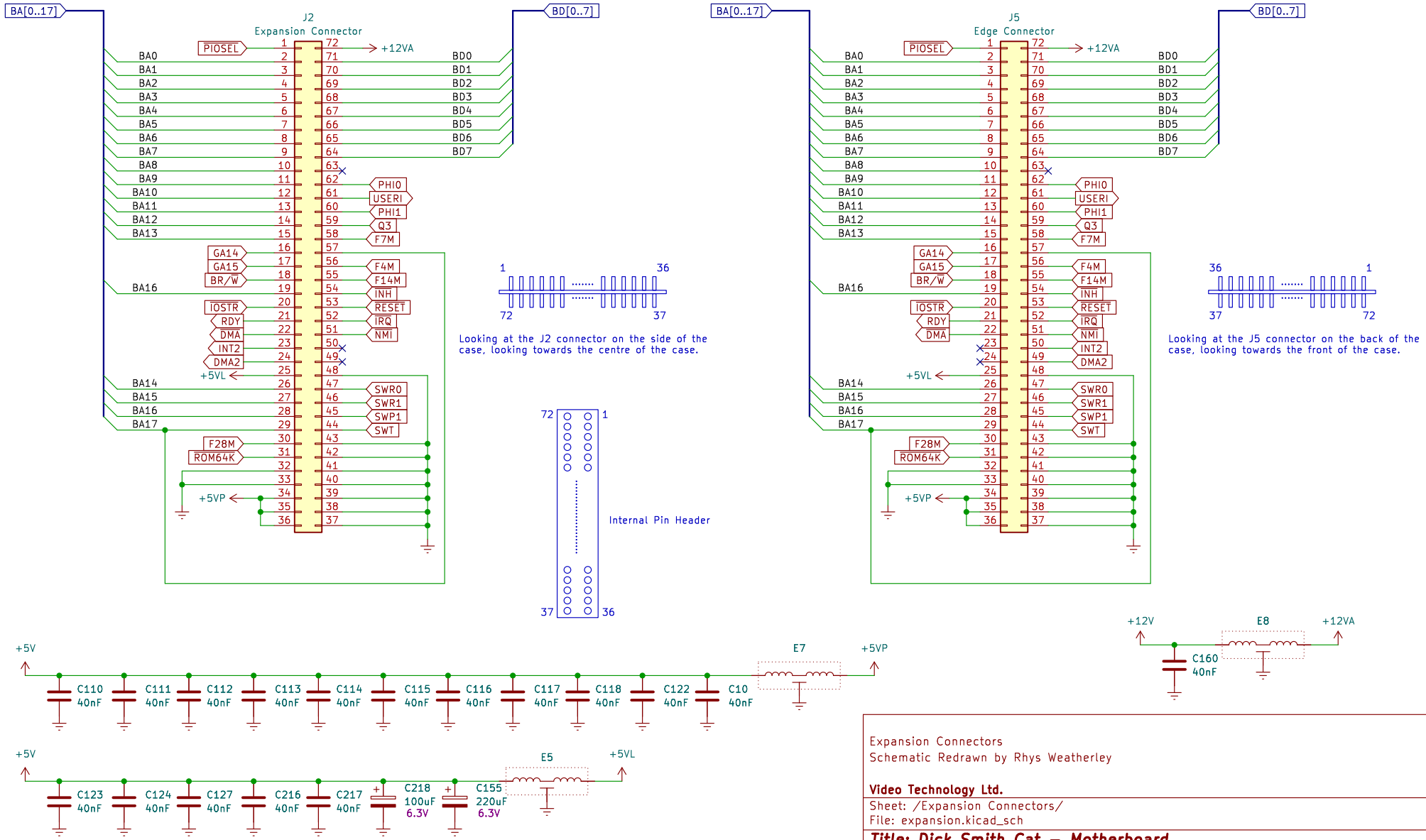

Expansion Connectors
Schematic Redrawn by Rhys Weatherley

Video Technology Ltd.

Sheet: /Expansion Connectors/
File: expansion.kicad_sch

Title: Dick Smith Cat – Motherboard

Size: A4	Date: 1984	**Rev:**
KiCad E.D.A. 8.0.9		Id: 11/12

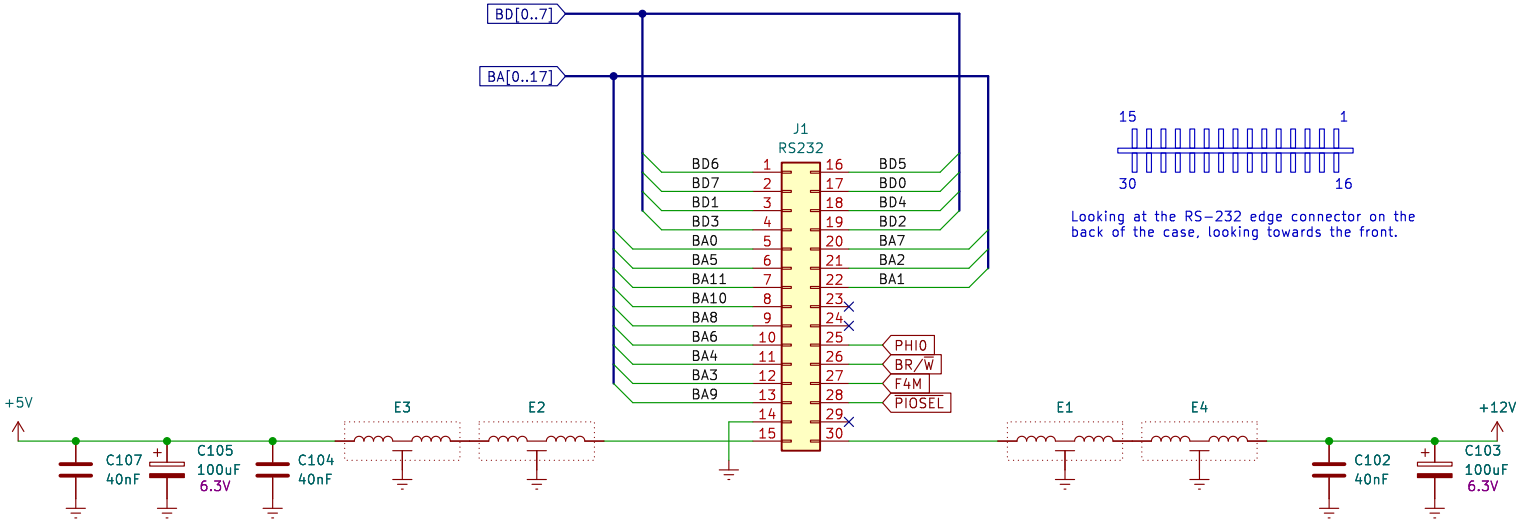

Looking at the RS-232 edge connector on the back of the case, looking towards the front.

RS232 Interface
Schematic Redrawn by Rhys Weatherley

Video Technology Ltd.

Sheet: /RS232 Interface/
File: rs232.kicad_sch

Title: Dick Smith Cat – Motherboard

Size: A4	Date: 1984	**Rev:**
KiCad E.D.A. 8.0.9		Id: 12/12