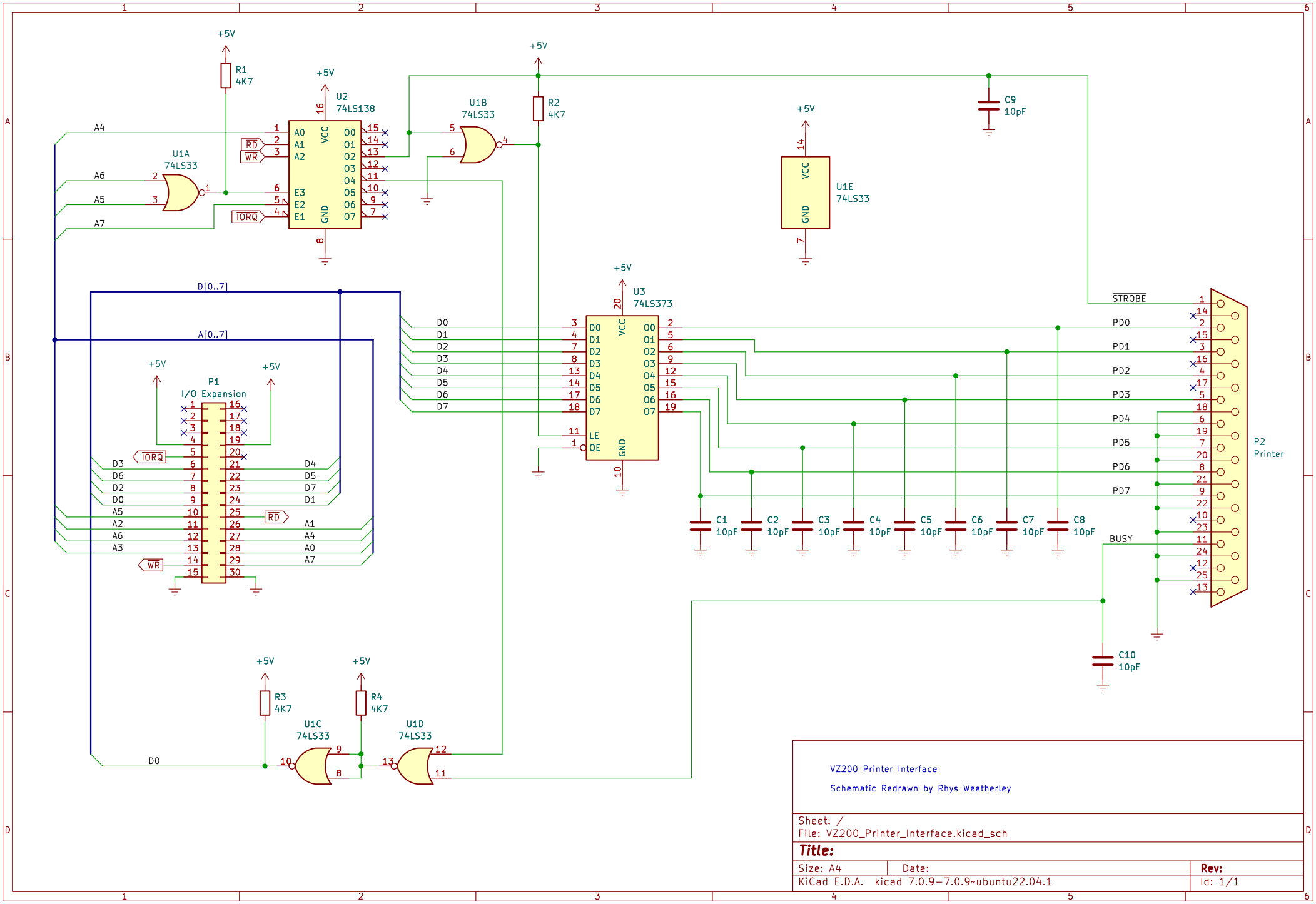

VZ200 Printer Interface

Schematic Redrawn by Rhys Weatherley

Sheet: /
File: VZ200_Printer_Interface.kicad_sch

Title:

Size: A4	Date:	Rev:
KiCad E.D.A. kicad 7.0.9-7.0.9~ubuntu22.04.1		Id: 1/1