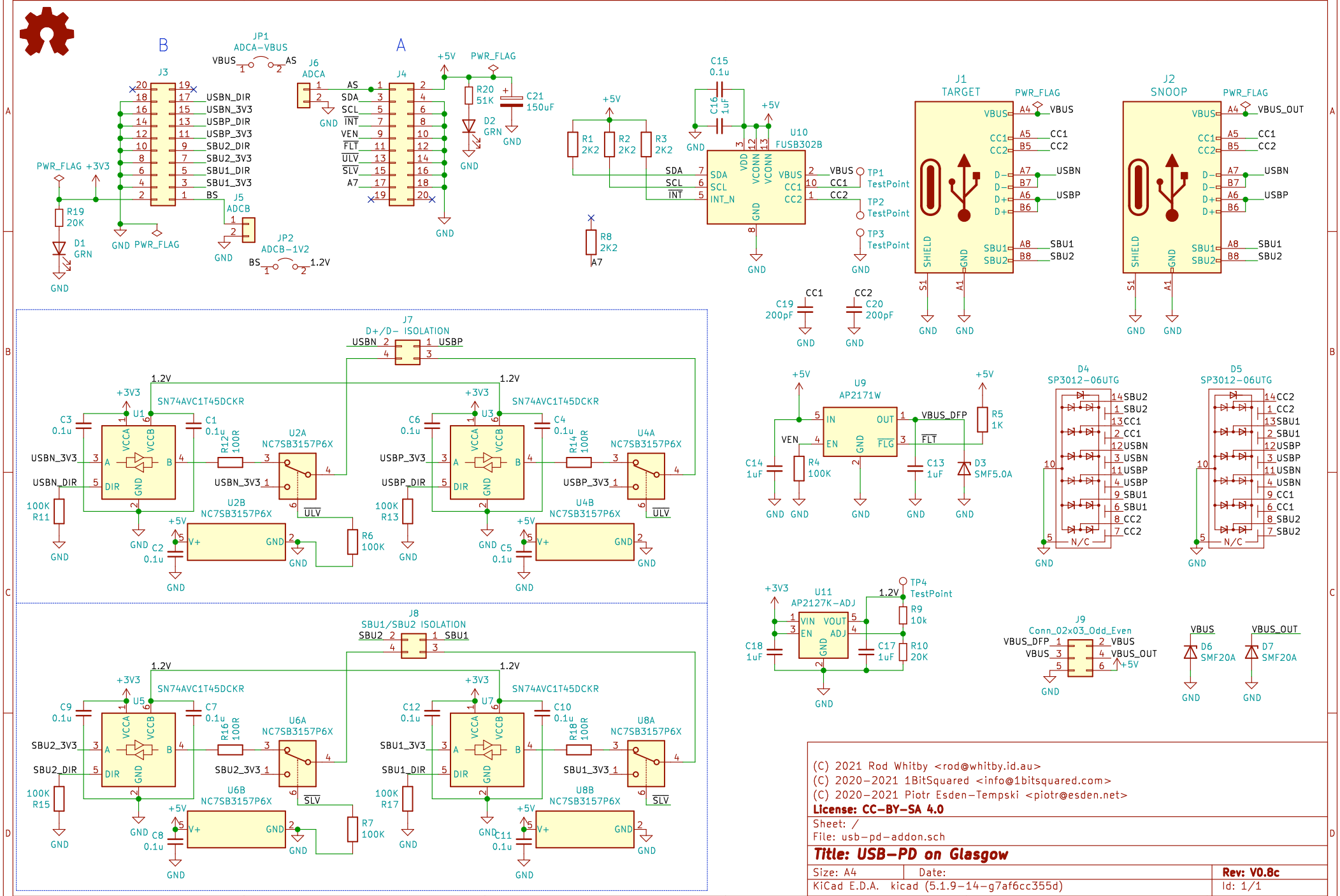
B
A
J3
J4
J1
TARGET
J2
SNOOP
U10
FUSB302B
U9
AP2171W
U11
AP2127K-ADJ
J7
D+/D- ISOLATION
J8
SBU1/SBU2 ISOLATION
SN74AVC1T45DCKR
NC7SB3157P6X
D4
SP3012-06UTG
D5
SP3012-06UTG
J9
Conn_02x03_Odd_Even
JP1
ADCA-VBUS
JP2
ADCB-1V2
J5
ADCB
J6
ADCA
PWR_FLAG
TP1
TestPoint
TP2
TestPoint
TP3
TestPoint
TP4
TestPoint
D1
GRN
D2
GRN
D3
SMF5.0A
D6
SMF20A
D7
SMF20A
R19
20K
R20
51K
C21
150uF
C15
0.1u
C16
1uF
R1
2K2
R2
2K2
R3
2K2
R8
2K2
C19
200pF
C20
200pF
R5
1K
R4
100K
C14
1uF
C13
1uF
R9
10k
R10
20K
C17
1uF
C18
1uF
R11
100K
R12
100R
R13
100K
R14
100R
R6
100K
R15
100K
R16
100R
R17
100K
R18
100R
R7
100K
C1
0.1u
C2
0.1u
C3
0.1u
C4
0.1u
C5
0.1u
C6
0.1u
C7
0.1u
C8
0.1u
C9
0.1u
C10
0.1u
C11
0.1u
C12
0.1u
U1
U2A
U2B
U3
U4A
U4B
U5
U6A
U6B
U7
U8A
U8B
+5V
+3V3
1.2V
GND
USBN_DIR
USBN_3V3
USBP_DIR
USBP_3V3
SBU2_DIR
SBU2_3V3
SBU1_DIR
SBU1_3V3
ULV
SLV
VBUS_DFP
VBUS_OUT
(C) 2021 Rod Whitby <rod@whitby.id.au>
(C) 2020-2021 1BitSquared <info@1bitsquared.com>
(C) 2020-2021 Piotr Esden-Tempski <piotr@esden.net>
License: CC-BY-SA 4.0
Sheet: /
File: usb-pd-addon.sch
Title: USB-PD on Glasgow
Size: A4
Date:
Rev: V0.8c
KiCad E.D.A. kicad (5.1.9-14-g7af6cc355d)
Id: 1/1