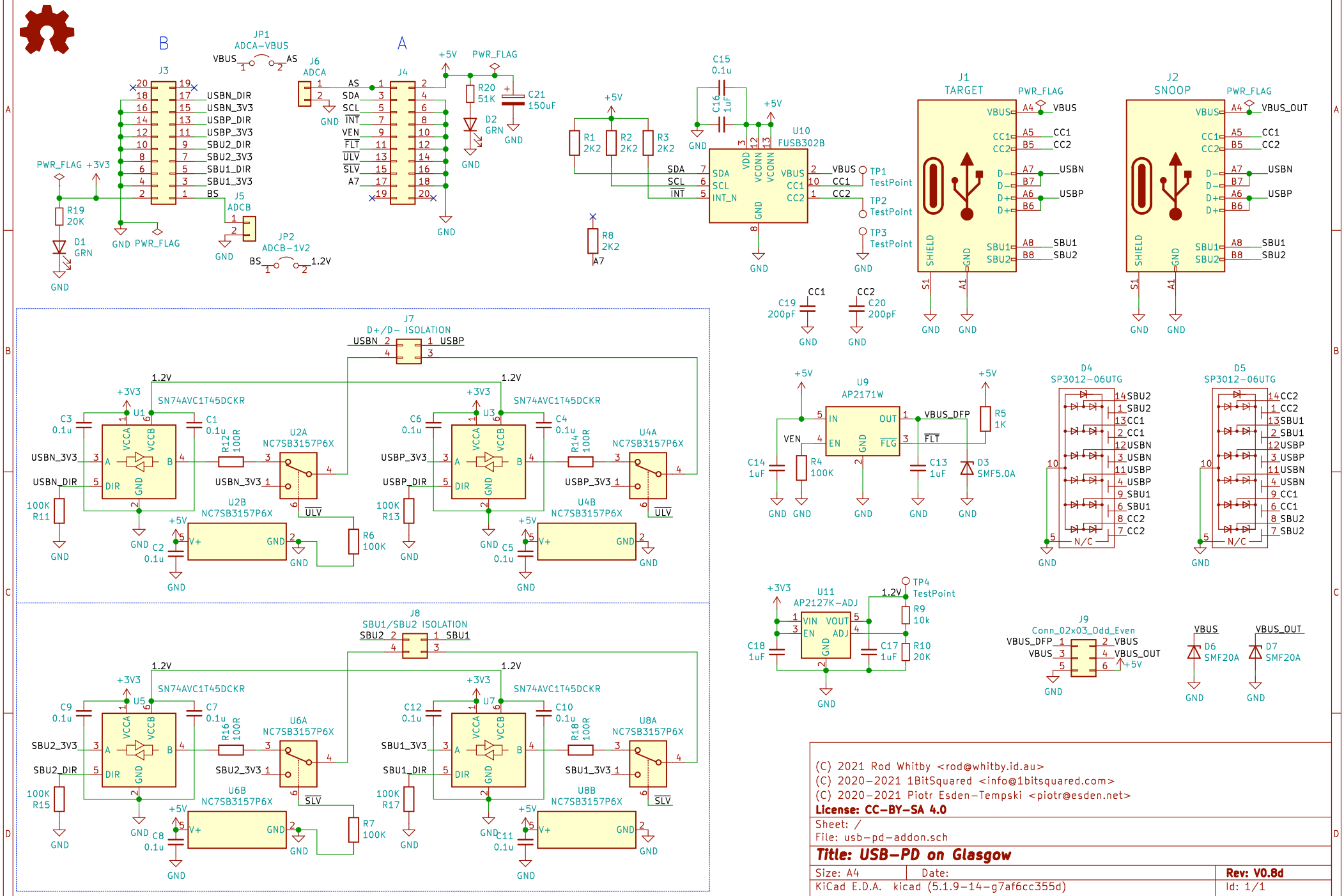

(C) 2021 Rod Whitby <rod@whitby.id.au>
(C) 2020-2021 1BitSquared <info@1bitsquared.com>
(C) 2020-2021 Piotr Esden-Tempski <piotr@esden.net>
License: CC-BY-SA 4.0

Sheet: /
File: usb-pd-addon.sch

Title: USB-PD on Glasgow

Size: A4	Date:	**Rev: V0.8d**
KiCad E.D.A. kicad (5.1.9-14-g7af6cc355d)		Id: 1/1