FCC Amateur Extra (Element 4) Statements of Fact

LLM prose study guide · Grouped by subelement and question group

Workbook format: review each statement, speak it aloud, and mark weak items.

SUBELEMENT E1 - Commission Rules and Licensing

Group E1A - Frequency privileges, bands, and special stations

E1A01: It is not legal to transmit a 3 kHz bandwidth USB signal with a carrier frequency of 14.348 MHz because the upper 1 kHz of the signal extends beyond the upper edge of the 20-meter band.

E1A02: When using a transceiver that displays the carrier frequency of phone signals, the lowest frequency at which a properly adjusted LSB emission will be totally within the band is 3 kHz above the lower band edge.

E1A03: The highest legal carrier frequency on the 20-meter band for transmitting a 2.8 kHz wide USB data signal is 14.1472 MHz.

E1A04: An Extra class operator may not answer the CQ of a station on 3.601 MHz LSB phone because the sideband components will extend beyond the edge of the phone band segment.

E1A05: On any vessel or craft documented or registered in the United States, the station apparatus of an amateur station must be in the physical control of a person holding an FCC issued amateur license or a person who is authorized for alien reciprocal operation.

E1A06: For channelized 60 meter operation, the transmit frequency of a CW signal is required to be at the center frequency of the channel.

E1A07: The maximum power permitted on the 2200-meter band is 1 watt EIRP (equivalent isotropic radiated power).

E1A08: If a station in a message forwarding system inadvertently forwards a message that is in violation of FCC rules, the control operator of the originating station is primarily accountable for the rules violation.

E1A09: Except in some parts of Alaska, the maximum power permitted on the 630-meter band is 5 watts EIRP (equivalent isotropic radiated power).

E1A10: If an amateur station is installed aboard a ship or aircraft, its operation must be approved by the master of the ship or the pilot in command of the aircraft.

E1A11: When operating an amateur station aboard a US-registered vessel in international waters, any FCC-issued amateur license is required.

Group E1B - Station locations, restrictions, and RACES operation

E1B01: A spurious emission is an emission outside the signal's necessary bandwidth that can be reduced or eliminated without affecting the information transmitted.

E1B02: An acceptable bandwidth for digital voice or slow-scan TV transmissions made on the HF amateur bands is 3 kHz.

E1B03: An amateur station must protect an FCC monitoring facility from harmful interference within a distance of 1 mile.

E1B04: The control operator of a repeater operating in the 70-centimeter band must cease operation or make changes to the repeater that mitigate interference if a radiolocation system experiences interference from that repeater.

E1B05: The National Radio Quiet Zone is an area surrounding the National Radio Astronomy Observatory.

E1B06: If you are erecting an amateur station antenna structure at a site at or near a public use airport, you may have to notify the Federal Aviation Administration and register it with the FCC as required by Part 17 of the FCC rules.

E1B07: PRB-1 applies to state and local zoning regulations.

E1B08: If an amateur station with a properly designed receiver causes interference to domestic broadcast reception, the FCC may require the amateur station to avoid transmitting during certain hours on frequencies that cause the interference.

E1B09: Under RACES rules, any FCC-licensed amateur station that has been certified by the responsible civil defense organization for the area served may be operated.

E1B10: An amateur station operating under RACES rules may use all amateur service frequencies that are authorized to the control operator.

E1B11: PRB-1 requires that state and local regulations affecting amateur radio antenna size and structures provide reasonable accommodations of amateur radio.

Group E1C - Remote control, foreign operation, and band rules

E1C01: The maximum bandwidth for a data emission on 60 meters is 2.8 kHz.

E1C02: Communications transmitted to amateur stations in foreign countries must be limited to those incidental to the purpose of the amateur service and remarks of a personal nature.

E1C03: An operator must wait 30 days after filing a notification with the Utilities Technology Council (UTC) before operating on the 2200-meter or 630-meter band, provided they have not been told that their station is within 1 kilometer of PLC systems using those frequencies.

E1C04: An IARP is a permit that allows US amateurs to operate in certain countries of the Americas.

E1C05: A station may transmit third party communications while being automatically controlled only when transmitting RTTY or data emissions.

E1C06: To operate in accordance with CEPT rules in foreign countries where permitted, you must have a copy of FCC Public Notice DA 16-1048.

E1C07: Before transmitting on the 630- or 2200-meter bands, operators must inform the Utilities Technology Council (UTC) of their call sign and the coordinates of the station.

E1C08: The maximum permissible duration of a remotely controlled station's transmissions if its control link malfunctions is 3 minutes.

E1C09: For angle modulation below 29.0 MHz, the highest permitted modulation index at the highest modulation frequency is 1.0.

E1C10: The maximum mean power level for a spurious emission below 30 MHz with respect to the fundamental emission is -43 dB.

E1C11: CEPT operating arrangements allow an FCC-licensed US citizen to operate in many European countries, and amateurs from many European countries to operate in the US.

E1C12: Phone emissions are permitted throughout the entire 630-meter band.

Group E1D - Space and Earth stations, telemetry, one way

E1D01: Telemetry is the one-way transmission of measurements at a distance from the measuring instrument.

E1D02: Telecommand signals from a space telecommand station may transmit encrypted messages.

E1D03: A space telecommand station is an amateur station that transmits communications to initiate, modify, or terminate functions of a space station.

E1D04: The identification transmissions from a balloon-borne telemetry station must include the station call sign.

E1D05: When a station is being operated by telecommand on or within 50 kilometers of the Earth's surface, all required identifying and control information specified by the regulations must be posted at the station location.

E1D06: The maximum permitted transmitter output power when operating a model craft by telecommand is 1 watt.

E1D07: The HF amateur bands that include allocations for space stations are 40 meters, 20 meters, 15 meters, and 10 meters.

E1D08: The 2 meter VHF amateur band has frequencies authorized for space stations.

E1D09: The UHF amateur bands that have frequencies authorized for space stations are 70 centimeters and 13 centimeters.

E1D10: Any amateur station so designated by the space station licensee is eligible to be a telecommand station of a space station, subject to the privileges of the class of operator license held by the control operator of the station.

E1D11: Any amateur station is eligible to operate as an Earth station, subject to the privileges of the class of operator license held by the control operator.

E1D12: One-way communications are permitted from an amateur space station, beacon station, or telecommand station.

Group E1E - Volunteer examiners, exams, and documentation

E1E01: Under Part 97 rules, VEs and VECs may be reimbursed for out-of-pocket expenses incurred in preparing, processing, administering, and coordinating an examination for an amateur radio operator license.

E1E02: Part 97 tasks the VECs with maintaining the pools of questions for all US amateur license examinations.

E1E03: A Volunteer Examiner Coordinator is an organization that has entered into an agreement with the FCC to coordinate, prepare, and administer amateur operator license examinations.

E1E04: To be accredited as a Volunteer Examiner, a Volunteer Examiner Coordinator must confirm that the VE applicant meets FCC requirements to serve as an examiner.

E1E05: If an examinee does not pass the exam, the VE team must return the application document to the examinee.

E1E06: Each administering VE is responsible for the proper conduct and necessary supervision during an amateur operator license examination session.

E1E07: If a candidate fails to comply with the examiner's instructions during an amateur operator license examination, the VE must immediately terminate the candidate's examination.

E1E08: A VE may not administer an examination to relatives of the VE as listed in the FCC rules.

E1E09: A VE who fraudulently administers or certifies an examination may have their amateur station license grant revoked and their amateur operator license grant suspended.

E1E10: After administering a successful amateur operator license examination, the administering VEs must submit the application document to the coordinating VEC according to the coordinating VEC instructions.

E1E11: If an examinee scores a passing grade on all examination elements needed for an upgrade or new license, three VEs must certify that the examinee is qualified for the license grant and that they have complied with the administering VE requirements.

Group E1F - External amplifiers, prohibited uses, special authority

E1F01: Spread spectrum transmissions are permitted only on amateur frequencies above 222 MHz.

E1F02: In the US, persons holding an amateur service license granted by the government of Canada are authorized the operating terms and conditions of their Canadian amateur service license, not to exceed US Amateur Extra class license privileges.

E1F03: A dealer may sell an external RF power amplifier capable of operation below 144 MHz if it has not been granted FCC certification only when the amplifier is constructed or modified by an amateur radio operator for use at an amateur station.

E1F04: Line A is a line roughly parallel to and south of the border between the US and Canada.

E1F05: Amateur stations located in the contiguous 48 states and north of Line A may not transmit in the 420 MHz to 430 MHz frequency segment.

E1F06: The FCC might issue a Special Temporary Authority (STA) to an amateur station to provide for experimental amateur communications.

E1F07: An amateur station may send a message to a business only when neither the amateur nor their employer has a pecuniary interest in the communications.

E1F08: Amateur station communications transmitted for hire or material compensation are prohibited, except as otherwise provided in the rules.

E1F09: Messages encoded to obscure their meaning cannot be transmitted over an amateur radio mesh network.

E1F10: Only Technician, General, Advanced, or Amateur Extra class operators may be the control operator of an auxiliary station.

E1F11: To qualify for a grant of FCC certification, an external RF power amplifier must satisfy the FCC's spurious emission standards when operated at the lesser of 1500 watts or its full output power.

SUBELEMENT E2 - Operating Procedures and Techniques

Group E2A - Amateur satellites, orbits, bands, and hardware

E2A01: During an ascending pass, an amateur satellite moves across the sky from south to north.

E2A02: A characteristic of an inverting linear transponder is that it reproduces all aspects of the input signals on the output with inverted spectrum and linear amplification, encompassing all standard defining features of inverting linear transponders.

E2A03: In an inverting linear transponder, the upload signal is mixed with a local oscillator signal and the difference product is transmitted.

E2A04: The mode of an amateur radio satellite is the satellite's uplink and downlink frequency bands.

E2A05: The letters in a satellite's mode designator specify the uplink and downlink frequency ranges.

E2A06: Keplerian elements are parameters that define the orbit of a satellite.

E2A07: A linear transponder can relay all of the listed types of signals that are suitable for it.

E2A08: Effective radiated power (ERP) should be limited to a satellite that uses a linear transponder to avoid reducing the downlink power to all other users.

E2A09: The terms "L band" and "S band" specify the 23- and 13-centimeter bands.

E2A10: A geostationary satellite appears to stay in one position in the sky.

E2A11: A circularly polarized antenna can be used to minimize the effects of spin modulation and Faraday rotation.

Group E2B - Fast and slow scan television operation

E2B01: In digital television, a coding rate of 3/4 means that 25% of the data sent is forward error correction data.

E2B02: A fast-scan (NTSC) television frame is made up of 525 horizontal lines.

E2B03: In a fast-scan (NTSC) television system, an interlaced scanning pattern is generated by scanning odd-numbered lines in one field and even-numbered lines in the next field.

E2B04: In analog SSTV, color information is sent by transmitting the color lines sequentially.

E2B05: In analog fast-scan TV transmissions, vestigial sideband reduces the bandwidth while increasing the fidelity of low frequency video components.

E2B06: Vestigial sideband modulation is amplitude modulation in which one complete sideband and a portion of the other sideband are transmitted.

E2B07: Amateur television DVB-T signals use QAM and QPSK modulation.

E2B08: Commercial analog TV receivers can be used for fast-scan TV operations on the 70-centimeter band by transmitting on channels shared with cable TV.

E2B09: An SSB receiver can be used to receive and decode SSTV using the Digital Radio Mondiale (DRM) protocol.

E2B10: In an analog slow-scan television signal, the brightness of the picture is encoded by the tone frequency.

E2B11: The function of the vertical interval signaling (VIS) code sent as part of an SSTV transmission is to identify the SSTV mode being used.

E2B12: Slow-scan television (SSTV) receiving software uses specific tone frequencies to signal the start of a new picture line.

Group E2C - Contest, DX, remote operation, and logging

E2C01: When a US-licensed operator remotely controls a station whose transmitter is located in the US, no additional indicator is required.

E2C02: The ADIF file format is used for exchanging amateur radio log data.

E2C03: Amateur radio contesting is generally excluded from the 30 meter band.

E2C04: Amateur radio mesh networks can use frequencies that are shared with various unlicensed wireless data services.

E2C05: A DX QSL Manager handles the receiving and sending of confirmations for a DX station.

E2C06: During a VHF/UHF contest, the highest level of SSB or CW activity is typically found in the weak signal segment of the band, with most of the activity near the calling frequency.

E2C07: The Cabrillo format is a standard for submission of electronic contest logs.

E2C08: The Logbook of The World (LoTW) may be used to confirm all of the listed types of contacts.

E2C09: An amateur radio mesh network is commonly implemented using a wireless router running custom firmware.

E2C10: DX stations often transmit and receive on different frequencies to reduce interference, improve operating efficiency, and comply with band plans or local operating restrictions.

E2C11: When attempting to contact a DX station during a contest or in a pileup, you should generally identify your station by sending your full call sign once or twice.

E2C12: The delay between a control operator action and the corresponding change in the transmitted signal is called latency.

Group E2D - VHF UHF digital, APRS, EME, meteor

E2D01: MSK144 is a digital mode designed for meteor scatter communications.

E2D02: When using the FT8 or FT4 modes in a VHF contest, the signal-to-noise ratio is replaced by the grid square.

E2D03: Q65 is a digital mode designed for EME communications.

E2D04: APRS is used for real-time tracking of balloons carrying amateur radio transmitters.

E2D05: The JT65 mode decodes signals with a very low signal-to-noise ratio.

E2D06: A method for establishing EME contacts is to use time-synchronous transmissions alternating between stations.

E2D07: The digital protocol used by APRS is AX.25.

E2D08: APRS beacon data is transmitted using an Unnumbered Information packet frame.

E2D09: JT65 uses multitone AFSK modulation.

E2D10: The packet path WIDE3-1 designates that three digipeater hops are requested with one hop remaining.

E2D11: APRS stations relay data by packet digipeaters.

Group E2E - HF digital operating modes and procedures

E2E01: FSK is the type of modulation used for data emissions below 30 MHz.

E2E02: WSJT-X digital mode transmit and receive timing is synchronized by synchronization of computer clocks.

E2E03: The "4" in FT4 refers to four-tone continuous-phase frequency shift keying.

E2E04: The FST4 mode uses various tone spacings, offers various decoding bandwidths, and transmits low-rate data packets at fixed time intervals coordinated by a time-synchronization signal.

E2E05: WSPR is a digital mode that does not support keyboard-to-keyboard operation.

E2E06: An FT8 transmission cycle has a length of 15 seconds.

E2E07: In Q65, multiple receive cycles are averaged.

E2E08: PACTOR is an HF digital mode that can be used to transfer binary files.

E2E09: PSK31 is an HF digital mode that uses variable-length character coding.

E2E10: FT8 is the digital mode that has the narrowest bandwidth among the listed options.

E2E11: In direct FSK, the transmitter VFO is modulated.

E2E12: ALE stations establish contact by constantly scanning a list of frequencies and activating the radio when the designated call sign is received.

E2E13: PACTOR IV has the highest data throughput under clear communication conditions.

SUBELEMENT E3 - Radio Wave Propagation

Group E3A - EME, meteor, tropospheric, auroral, ionospheric paths

E3A01: The approximate maximum separation measured along the surface of the Earth between two stations communicating by EME is 12,000 miles if the moon is visible by both stations.

E3A02: Libration fading of an EME signal is characterized by a fluttery, irregular fading.

E3A03: When scheduling EME contacts, the least path loss generally occurs when the Moon is at perigee.

E3A04: An electromagnetic wave travels at a right angle to both the electric field and the magnetic field.

E3A05: The electric and magnetic fields of an electromagnetic wave are oriented at right angles to each other and to the direction of propagation.

E3A06: To continue a long-distance contact when the MUF for that path decreases due to darkness, you should switch to a lower frequency HF band.

E3A07: Atmospheric ducts capable of propagating microwave signals often form over large bodies of water.

E3A08: When a meteor strikes the Earth's atmosphere, a linear ionized region is formed in the E region of the ionosphere.

E3A09: The frequency range most suited for meteor-scatter communications is 28 MHz to 148 MHz.

E3A10: The speed of electromagnetic waves through a medium is determined by the index of refraction.

E3A11: A typical range for tropospheric duct propagation of microwave signals is 100 miles to 300 miles.

E3A12: Auroral propagation is most likely to result from severe geomagnetic storms.

E3A13: CW is the best emission mode for auroral propagation.

E3A14: Circularly polarized electromagnetic waves are waves with rotating electric and magnetic fields.

Group E3B - Transequatorial, long path, sporadic E, ground wave

E3B01: Transequatorial propagation (TEP) is most likely to occur between points separated by 2,000 miles to 3,000 miles over a path perpendicular to the geomagnetic equator.

E3B02: The approximate maximum range for signals using transequatorial propagation is 5,000 miles.

E3B03: Transequatorial propagation is most likely to occur in the afternoon or early evening.

E3B04: Extraordinary and ordinary waves are independently propagating, elliptically polarized waves created in the ionosphere.

E3B05: On 160 meters, a path that is entirely in darkness is most likely to support long-distance propagation.

E3B06: Long-path propagation is most frequent on the 40 meter and 20 meter amateur bands.

E3B07: Lowering a signal's transmitted elevation angle increases the distance covered by each hop in ionospheric HF skip propagation.

E3B08: The maximum range of ground-wave propagation decreases when the signal frequency is increased.

E3B09: Sporadic-E propagation is most likely to occur around the solstices, especially the summer solstice.

E3B10: In chordal-hop propagation, the signal experiences less loss than in multi-hop propagation that uses the Earth as a reflector.

E3B11: Sporadic-E propagation is most likely to occur between sunrise and sunset.

E3B12: Chordal-hop propagation is a form of propagation in which radio signals undergo successive ionospheric refractions without an intermediate reflection from the ground.

E3B13: Ground-wave propagation supports vertical polarization.

Group E3C - Propagation prediction, radio horizon, space weather

E3C01: Short-term radio blackouts are caused by solar flares.

E3C02: A rising A-index or K-index indicates increasing disturbance of the geomagnetic field.

E3C03: Signal paths through the auroral oval are most likely to experience high levels of absorption when the A-index or K-index is elevated.

E3C04: The value of Bz represents the north-south strength of the interplanetary magnetic field.

E3C05: A southward orientation of Bz (B sub z) increases the likelihood that charged particles from the Sun will cause disturbed conditions.

E3C06: The VHF/UHF radio horizon is approximately 15 percent farther than the geographic horizon.

E3C07: Class X indicates the greatest solar flare intensity.

E3C08: The space-weather term for an extreme geomagnetic storm is G5.

E3C09: Amateur radio propagation reporting networks report data about digital-mode and CW signals.

E3C10: The 304A solar parameter measures UV emissions at 304 angstroms that are correlated to the solar flux index.

E3C11: VOACAP software models HF propagation.

E3C12: A sudden rise in radio background noise across a large portion of the HF spectrum indicates that a coronal mass ejection impact or a solar flare has occurred.

SUBELEMENT E4 - Amateur Station Practices

Group E4A - Test equipment and RF measurement tools

E4A01: The highest frequency signal that can be accurately displayed on a digital oscilloscope is limited by the sampling rate of the analog-to-digital converter.

E4A02: A spectrum analyzer displays signal amplitude on the vertical axis and frequency on the horizontal axis.

E4A03: A spectrum analyzer is used to display spurious signals and intermodulation distortion products generated by an SSB transmitter.

E4A04: Compensation of an oscilloscope probe is performed by displaying a square wave and adjusting the probe until the horizontal portions of the displayed wave are as nearly flat as possible.

E4A05: A prescaler is used with a frequency counter to reduce the signal frequency to within the counter's operating range.

E4A06: On a digital oscilloscope, aliasing causes a false, jittery low-frequency version of the waveform to be displayed.

E4A07: An advantage of using an antenna analyzer compared to an SWR bridge is that antenna analyzers compute SWR and impedance automatically.

E4A08: Standing Wave Ratio (SWR) can be measured using any of the commonly available SWR measurement methods or instruments.

E4A09: It is good practice when using an oscilloscope probe to minimize the length of the probe's ground connection.

E4A10: The most effective trigger mode to use on an oscilloscope when measuring a linear power supply’s output ripple is the Line trigger mode.

E4A11: An antenna analyzer can measure antenna system impedance, the SWR (Standing Wave Ratio), and the quality factor (Q) of an antenna system.

Group E4B - Measurement methods, accuracy, and calibration limits

E4B01: The factor that most affects the accuracy of a frequency counter is its time base accuracy.

E4B02: The input impedance of a voltmeter equals its full-scale reading multiplied by its sensitivity in ohms per volt.

E4B03: The S parameter equivalent to forward gain is S21.

E4B04: The S parameter that represents input port return loss or reflection coefficient (equivalent to VSWR) is S11.

E4B05: The three test loads used to calibrate an RF vector network analyzer are a short circuit, an open circuit, and 50 ohms.

E4B06: When a directional power meter between a transmitter and a terminating load indicates 100 watts forward power and 25 watts reflected power, the power absorbed by the load is 75 watts.

E4B07: The subscripts of S parameters represent the port or ports at which measurements are made.

E4B08: The Q of a series-tuned circuit can be determined from the bandwidth of the circuit's frequency response.

E4B09: A two-port vector network analyzer can be used to measure filter frequency response.

E4B10: Intermodulation distortion in an SSB transmitter is measured by modulating the transmitter with two AF signals having non-harmonically related frequencies and observing the RF output with a spectrum analyzer.

E4B11: A vector network analyzer can measure antenna impedance, complex impedance, return loss, and reflection coefficient.

Group E4C - Receiver noise, selectivity, SDR linearity, attenuation

E4C01: Excessive phase noise in an SDR receiver's master clock oscillator can combine with strong signals on nearby frequencies to generate interference.

E4C02: A front-end filter or preselector can be effective in eliminating interference from strong out-of-band signals.

E4C03: The term for the suppression in an FM receiver of one signal by another stronger signal on the same frequency is the capture effect.

E4C04: The noise figure of a receiver is the ratio in dB of the noise generated by the receiver to the theoretical minimum noise.

E4C05: A receiver noise floor of -174 dBm represents the theoretical noise in a 1 Hz bandwidth at the input of a perfect receiver at room temperature.

E4C06: Increasing a receiver's bandwidth from 50 Hz to 1,000 Hz increases the receiver's noise floor by 13 dB.

E4C07: The MDS of a receiver represents the minimum discernible signal.

E4C08: An SDR receiver is overloaded when input signals exceed the reference voltage of the analog-to-digital converter.

E4C09: A high IF is selected for a superheterodyne HF or VHF communications receiver because it makes it easier for the front-end circuitry to eliminate image responses.

E4C10: A variety of receiver bandwidths allows the receive bandwidth to be set to match the modulation bandwidth, maximizing signal-to-noise ratio and minimizing interference.

E4C11: Input attenuation reduces receiver overload on the lower frequency HF bands with little or no impact on signal-to-noise ratio because atmospheric noise is generally greater than internally generated noise even after attenuation.

E4C12: A narrow-band roofing filter improves receiver blocking dynamic range by attenuating strong signals near the receive frequency.

E4C13: Reciprocal mixing is local oscillator phase noise mixing with adjacent strong signals to create interference to desired signals.

E4C14: The purpose of the receiver IF Shift control is to reduce interference from stations transmitting on adjacent frequencies.

Group E4D - Receiver dynamic range, intermodulation, and sensitivity

E4D01: The blocking dynamic range of a receiver is the difference in dB between the noise floor and the level of an incoming signal that will cause 1 dB of gain compression.

E4D02: Poor dynamic range in a receiver causes spurious signals due to cross modulation and desensitization from strong adjacent signals.

E4D03: Intermodulation interference between two repeaters in close proximity is created when their output signals mix in the final amplifier of one or both transmitters.

E4D06: Desensitization is the reduction in receiver sensitivity caused by a strong signal near the received frequency.

E4D07: Receiver desensitization is reduced by inserting attenuation before the first RF stage.

E4D08: Intermodulation in an electronic circuit is caused by nonlinear circuits or devices.

E4D09: The purpose of the preselector in a communications receiver is to increase the rejection of signals outside the band being received.

E4D10: A third-order intercept level of 40 dBm means that a pair of 40 dBm input signals will theoretically generate a third-order intermodulation product that has the same output amplitude as either of the input signals.

E4D11: Odd-order intermodulation products created by two signals in the band being received are of particular interest because they are also likely to fall within the same band.

E4D12: The link margin in a system with a transmit power level of 10 W (+40 dBm), a system antenna gain of 10 dBi, a cable loss of 3 dB, a path loss of 136 dB, a receiver minimum discernable signal of -103 dBm, and a required signal-to-noise ratio of 6 dB is +8 dB.

E4D13: With a transmit power of 10 W (+40 dBm), a transmit antenna gain of 6 dBi, a receive antenna gain of 3 dBi, and a path loss of 100 dB, the received signal level is -51 dBm.

E4D14: A receiver minimum discernible signal of -100 dBm represents a power level of 0.1 picowatts.

Group E4E - Noise sources, interference control, grounding practices

E4E01: When using an automatic notch filter (ANF) to remove interfering carriers while receiving CW signals, the CW signal itself can also be removed along with the interfering carrier.

E4E02: Digital noise reduction can often reduce atmospheric noise, ignition noise, and line noise interference on an HF mobile or portable receiver.

E4E04: Conducted noise from an automobile battery charging system can be suppressed by installing ferrite chokes on the charging system leads.

E4E05: Radio frequency interference from a line-driven AC motor is suppressed by using a brute-force AC-line filter in series with the motor's power leads.

E4E06: Computer network equipment can cause electrical interference characterized by the appearance of unstable modulated or unmodulated signals at specific frequencies.

E4E07: Shielded cables can radiate or receive interference when common-mode currents flow on the shield and conductors.

E4E08: Common-mode current flows equally on all conductors of an unshielded multiconductor cable.

E4E09: When using a noise blanker, strong signals may be distorted and appear to cause spurious emissions.

E4E10: Intermittent loud roaring or buzzing AC line interference can be created by arcing contacts in a thermostatically controlled device, a defective doorbell or doorbell transformer inside a home, or arcing contacts in an overcurrent device.

E4E11: Local AM broadcast band signals can combine to generate spurious signals on the MF or HF bands when nearby corroded metal connections mix and reradiate the broadcast signals.

E4E12: Interference received as a series of carriers at regular intervals across a wide frequency range is caused by switch-mode power supplies.

E4E13: A station AC surge protector should be installed on the single point ground panel.

E4E14: The purpose of a single point ground panel is to ensure all lightning protectors activate at the same time.

SUBELEMENT E5 - Electrical Principles and Concepts

Group E5A - Resonance, Q, and bandwidth in circuits

E5A01: Resonance can cause the voltage across reactances in a series RLC circuit to be higher than the voltage applied to the entire circuit.

E5A02: The resonant frequency of an RLC circuit with R equal to 22 ohms, L equal to 50 microhenries, and C equal to 40 picofarads is 3.56 MHz.

E5A03: At resonance, the magnitude of the impedance of a series RLC circuit is approximately equal to the circuit resistance.

E5A04: At resonance, the magnitude of the impedance of a parallel RLC circuit is approximately equal to the circuit resistance.

E5A05: Increasing the Q of an impedance-matching circuit decreases the matching bandwidth.

E5A06: The magnitude of the circulating current within the components of a parallel LC circuit at resonance is at a maximum.

E5A07: The magnitude of the current at the input of a parallel RLC circuit at resonance is at its minimum.

E5A08: At resonance in a series resonant circuit, the voltage across the circuit and the current through the circuit are in phase.

E5A09: The Q of an RLC parallel resonant circuit is calculated by dividing the resistance by the reactance of either the inductance or the capacitance.

E5A10: The resonant frequency of an RLC circuit with R equal to 33 ohms, L equal to 50 microhenries, and C equal to 10 picofarads is 7.12 MHz.

E5A11: A resonant circuit with a resonant frequency of 7.1 MHz and a Q of 150 has a half-power bandwidth of 47.3 kHz.

E5A12: A resonant circuit with a resonant frequency of 3.7 MHz and a Q of 118 has a half-power bandwidth of 31.4 kHz.

E5A13: In a series resonant circuit, increasing the Q causes the internal voltages to increase.

Group E5B - Time constants, phase, admittance, susceptance

E5B01: The time required for the capacitor in an RC circuit to charge to 63.2% of the applied voltage or to discharge to 36.8% of its initial voltage is called one time constant.

E5B02: The letter commonly used to represent susceptance is B.

E5B03: To convert impedance in polar form to an equivalent admittance, take the reciprocal of the magnitude and change the sign of the angle.

E5B04: The time constant of a circuit having two 220-microfarad capacitors and two 1-megohm resistors, all in parallel, is 220 seconds.

E5B05: When pure reactance is converted to susceptance, its magnitude is replaced by its reciprocal.

E5B06: Susceptance is the imaginary part of admittance.

E5B07: In a series RLC circuit where XC is 500 ohms, R is 1 kilohm, and XL is 250 ohms, the phase angle between the voltage across and the current through the circuit is 14.0 degrees with the voltage lagging the current.

E5B08: In a series RLC circuit where XC is 300 ohms, R is 100 ohms, and XL is 100 ohms, the phase angle between the voltage across and the current through the circuit is 63 degrees with the voltage lagging the current.

E5B09: In a capacitor, the AC current leads the voltage by 90 degrees.

E5B10: In an inductor with AC applied, the voltage across the inductor leads the current through the inductor by 90 degrees.

E5B11: In a series RLC circuit with XC equal to 25 ohms, R equal to 100 ohms, and XL equal to 75 ohms, the phase angle between the voltage across and the current through the circuit is 27 degrees with the voltage leading the current.

E5B12: Admittance is the inverse of impedance.

Group E5C - Rectangular, polar coordinates, and phasors

E5C01: Pure capacitive reactance of 100 ohms in rectangular notation is represented as 0 - j100.

E5C02: Impedances in polar coordinates are described by magnitude and phase angle.

E5C03: A pure inductive reactance in polar coordinates is represented by a positive 90 degree phase angle.

E5C04: A logarithmic scale is most often used for the Y-axis of graphs of circuit frequency response.

E5C05: A phasor diagram is used to show the phase relationship between impedances at a given frequency.

E5C06: The impedance 50 - j25 ohms represents 50 ohms of resistance in series with 25 ohms of capacitive reactance.

E5C07: The impedance of a pure resistance is plotted on the horizontal axis when using rectangular coordinates.

E5C08: The phase angle of a circuit containing resistance, inductive reactance, and/or capacitive reactance is often displayed using polar coordinates.

E5C09: When using rectangular coordinates to graph the impedance of a circuit, the X axis represents the resistive component and the Y axis represents the reactive component.

Figure E5-1

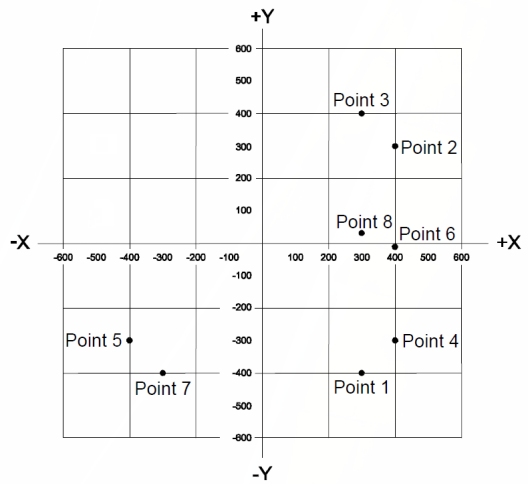

E5C10: On Figure E5-1, point 4 represents the impedance of a series circuit consisting of a 400-ohm resistor and a 38-picofarad capacitor at 14 MHz.

Figure E5-1

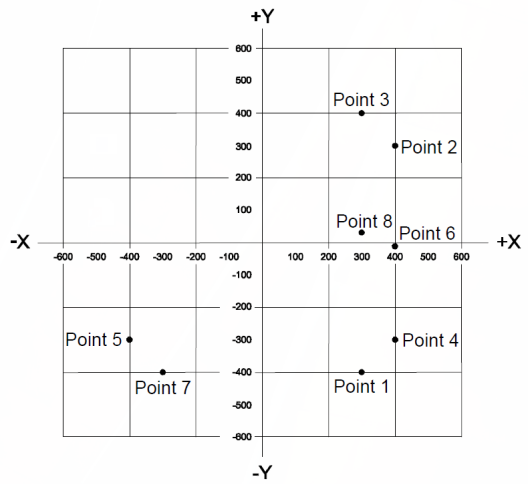

E5C11: On the impedance diagram of Figure E5-1, the point that represents a series circuit consisting of a 300-ohm resistor and an 18-microhenry inductor at 3.505 MHz is Point 3.

Figure E5-1

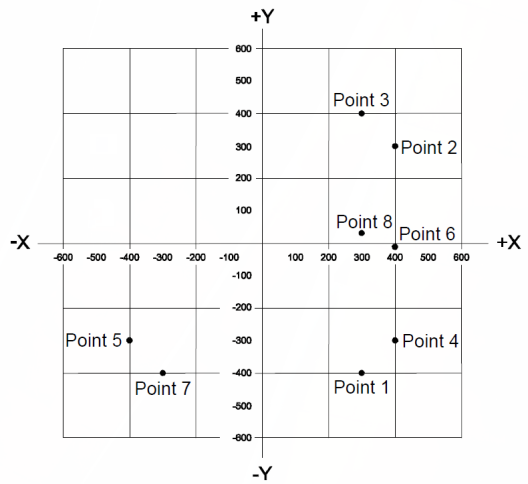

E5C12: On Figure E5-1, point 1 represents the impedance of a series circuit consisting of a 300-ohm resistor and a 19-picofarad capacitor at 21.200 MHz.

Group E5D - RF effects, skin depth, and power

E5D01: Due to conductor skin effect, resistance increases as frequency increases because RF current flows closer to the surface of the conductor.

E5D02: It is important to keep lead lengths short for components used in circuits for VHF and above to minimize inductive reactance.

E5D03: For reactive power, the current and voltage are 90 degrees out of phase.

E5D04: Short connections are used at microwave frequencies to reduce phase shift along the connection.

E5D05: Electrolytic capacitors are unsuitable for use at RF because their parasitic inductance degrades performance at high frequencies.

E5D06: An inductor's self-resonance is created by its inter-turn capacitance.

E5D07: The self-resonance of a component is created by the combination of the component's nominal reactance and its parasitic reactance.

E5D08: The primary cause of loss in film capacitors at RF is skin effect.

E5D09: In ideal inductors and capacitors, energy is stored in magnetic or electric fields, but power is not dissipated.

E5D10: As a conductor’s diameter increases, its electrical length increases.

E5D11: A circuit consisting of a 100-ohm resistor in series with a 100-ohm inductive reactance drawing 1 ampere consumes 100 watts of real power.

E5D12: Reactive power is wattless, nonproductive power.

SUBELEMENT E6 - Circuit Components and Devices

Group E6A - Semiconductors, BJTs, and FET operation

E6A01: Gallium arsenide is used as a semiconductor material in microwave circuits.

E6A02: N-type semiconductor material contains excess free electrons.

E6A03: A PN-junction diode does not conduct current when reverse biased because the applied voltage separates the holes in the P-type material and the electrons in the N-type material, widening the depletion region.

E6A04: An impurity atom that adds holes to a semiconductor crystal structure is called an acceptor impurity.

E6A05: The DC input impedance at the gate of a field-effect transistor (FET) is higher than the input impedance of a bipolar transistor.

E6A06: The beta of a bipolar junction transistor is the change in collector current with respect to the change in base current.

E6A07: A silicon NPN junction transistor is biased on when the base-to-emitter voltage is approximately 0.6 volts to 0.7 volts.

E6A08: The alpha cutoff frequency is the frequency at which the grounded-base current gain of a bipolar junction transistor has decreased to 0.7 of the gain obtainable at 1 kHz.

E6A09: A depletion-mode field-effect transistor (FET) is an FET that exhibits a current flow between source and drain when no gate voltage is applied.

Figure E6-1

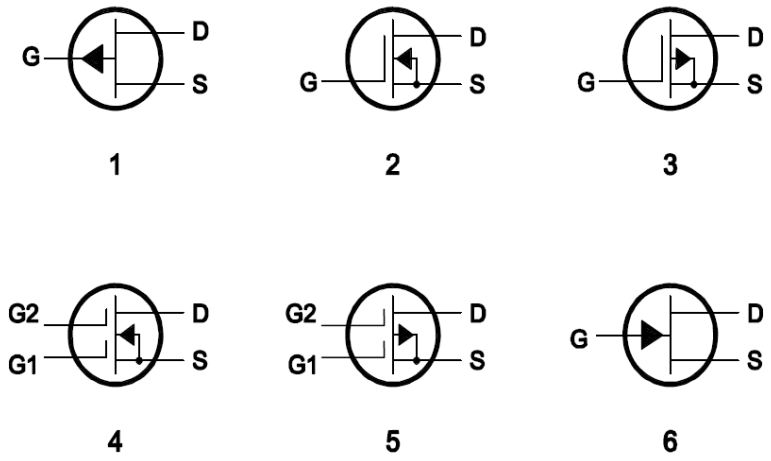

E6A10: In Figure E6-1, schematic symbol 4 represents an N-channel dual-gate MOSFET.

Figure E6-1

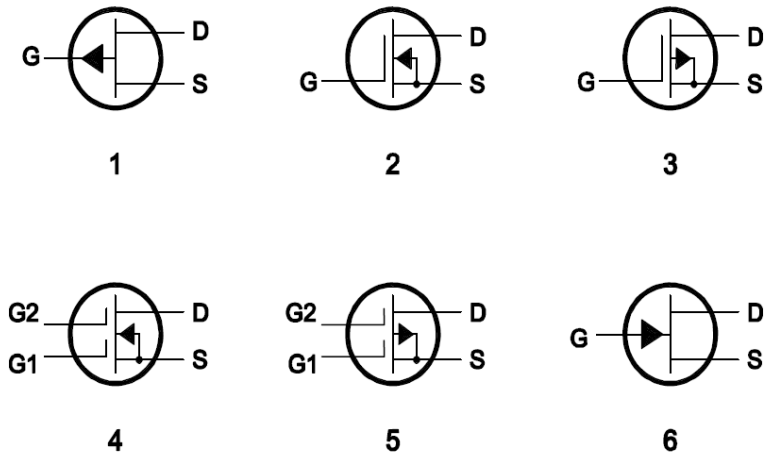

E6A11: In Figure E6-1, symbol 1 is the schematic symbol for a P-channel junction FET.

E6A12: Connecting Zener diodes between a MOSFET gate and its source or drain serves to protect the gate from static damage.

Group E6B - Diode types, behavior, and applications

E6B01: The most useful characteristic of a Zener diode is that it provides a constant voltage drop under conditions of varying current.

E6B02: A Schottky diode is a better choice than a silicon junction diode for use as a power supply rectifier because it has a lower forward voltage drop.

E6B03: The band gap of an LED's semiconductor material determines its forward voltage drop.

E6B04: A varactor diode is a semiconductor device designed for use as a voltage-controlled capacitor.

E6B05: A PIN diode is useful as an RF switch because it has low junction capacitance.

E6B06: A Schottky diode is commonly used as a VHF/UHF mixer or detector.

E6B07: A junction diode fails from excessive current because of excessive junction temperature.

E6B08: A Schottky barrier diode is a metal-semiconductor junction.

E6B09: Point-contact diodes are commonly used as RF detectors.

Figure E6-2

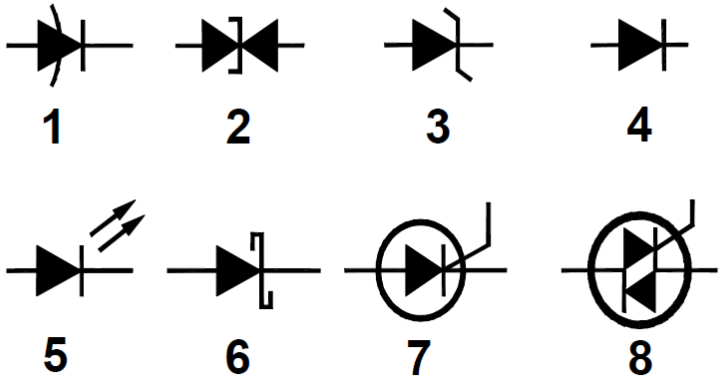

E6B10: In Figure E6-2, symbol number 6 represents a Schottky diode.

E6B11: The attenuation of RF signals by a PIN diode is controlled by the forward DC bias current.

Group E6C - Digital IC families, logic gates, PLDs

E6C01: The function of hysteresis in a comparator is to prevent input noise from causing unstable output signals.

E6C02: When the level of a comparator’s input signal crosses the threshold voltage, the comparator changes its output state.

E6C03: Tri-state logic refers to logic devices that have 0, 1, and high-impedance output states.

E6C04: An advantage of BiCMOS logic is that it has the high input impedance of CMOS and the low output impedance of bipolar transistors.

E6C05: CMOS digital logic families have the lowest power consumption.

E6C06: CMOS digital integrated circuits have high immunity to noise on the input signal or power supply because the input switching threshold is about half the power supply voltage.

E6C07: A pull-up or pull-down resistor is a resistor connected to the positive or negative supply used to establish a voltage when an input or output is an open circuit.

Figure E6-3

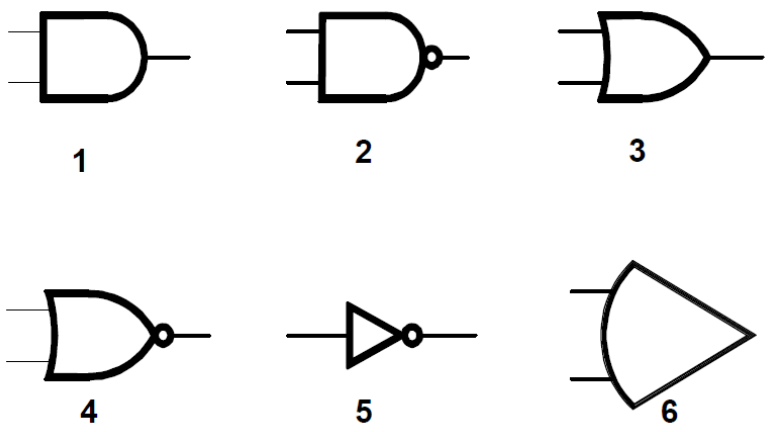

E6C08: In Figure E6-3, the schematic symbol for a NAND gate is labeled 2.

E6C09: A hardware description language (HDL) is used to design the configuration of a field-programmable gate array (FPGA).

Figure E6-3

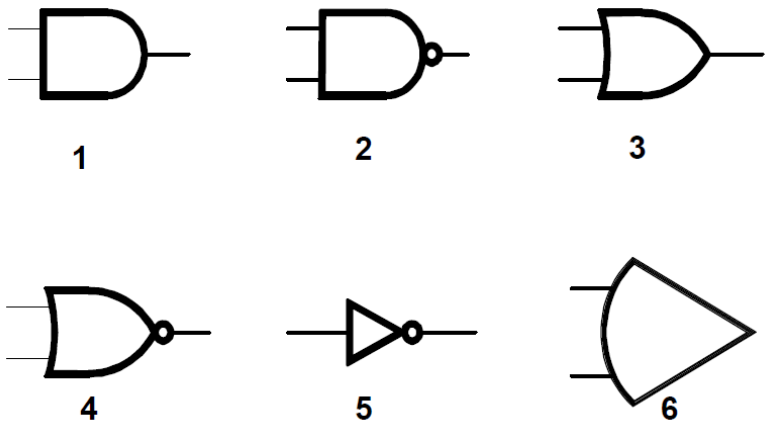

E6C10: In Figure E6-3, the schematic symbol for a NOR gate is labeled 4.

Figure E6-3

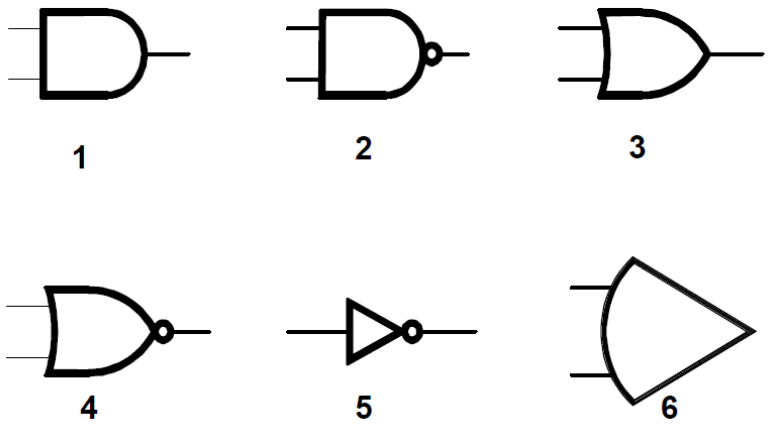

E6C11: In Figure E6-3, symbol 5 represents the NOT operation (inversion).

Group E6D - Inductors, transformers, and piezoelectric devices

E6D01: Piezoelectricity is a characteristic of materials that generate a voltage when stressed and that flex when a voltage is applied.

E6D02: The equivalent circuit of a quartz crystal is a series RLC network in parallel with a shunt capacitance representing electrode and stray capacitance.

E6D03: The piezoelectric effect is the mechanical deformation of material due to the application of a voltage.

E6D04: Cores of inductors and transformers are sometimes constructed of thin layers to reduce power loss from eddy currents in the core.

E6D05: Ferrite cores generally require fewer turns than powdered iron cores to produce a given inductance value.

E6D08: Powdered iron has the highest temperature stability of its magnetic characteristics.

E6D09: Ferrite beads are commonly used as VHF and UHF parasitic suppressors at the input and output terminals of a transistor HF amplifier.

E6D10: A primary advantage of using a toroidal core instead of a solenoidal core in an inductor is that toroidal cores confine most of the magnetic field within the core material.

E6D11: Brass is a core material that decreases inductance when inserted into a coil.

E6D12: Inductor saturation is caused by operation at excessive magnetic flux.

Group E6E - RF semiconductor materials, packages, and usage

E6E01: Gallium arsenide (GaAs) is useful for semiconductor devices operating at UHF and higher frequencies because it has higher electron mobility.

E6E02: A DIP is a through-hole device package type.

E6E03: Gallium nitride supports the highest frequency of operation when used in MMICs.

E6E04: The most common input and output impedance of MMICs is 50 ohms.

E6E05: A typical noise figure value for a low-noise UHF preamplifier is 0.5 dB.

E6E06: MMICs are popular for VHF through microwave circuits because they provide controlled gain, a low noise figure, and constant input and output impedance over the specified frequency range.

E6E07: Microstrip transmission line is often used for connections to MMICs.

E6E08: Power is supplied to the most common type of MMIC through a resistor and/or RF choke connected to the amplifier output lead.

E6E09: Surface mount component package types have the least parasitic effects at frequencies above the HF range.

E6E10: At RF, surface-mount technology offers the advantages of higher circuit density, lower parasitic inductance, lower parasitic capacitance, and better mechanical performance compared to using through-hole components.

E6E11: A characteristic of DIP packaging used for integrated circuits is that it has two rows of connecting pins on opposite sides of the package.

E6E12: DIP through-hole package ICs are not typically used at UHF and higher frequencies because their excessive lead length degrades performance.

Group E6F - Electro optical devices, sensors, and isolators

E6F01: Electrons absorb the energy from light falling on a photovoltaic cell.

E6F02: When light shines on a photoconductive material, its resistance decreases.

E6F03: The most common configuration of an optoisolator or optocoupler is an LED and a phototransistor.

E6F04: The photovoltaic effect is the conversion of light to electrical energy.

E6F05: An optical shaft encoder is a device that detects rotation by interrupting a light source with a patterned wheel.

E6F06: Photoconductive devices are most commonly created using crystalline semiconductor material.

E6F07: A solid-state relay is a device that uses semiconductors to implement the functions of an electromechanical relay.

E6F08: Optoisolators are often used with solid-state circuits that control 120 VAC circuits because they provide electrical isolation between the control circuit and the circuit being switched.

E6F09: The efficiency of a photovoltaic cell is the relative fraction of light that is converted to current.

E6F10: The most common material used in power-generating photovoltaic cells is silicon.

E6F11: A fully illuminated silicon photovoltaic cell produces an approximate open-circuit voltage of 0.5 volts.

SUBELEMENT E7 - Practical Electronic Circuits

Group E7A - Digital logic, dividers, and truth tables

E7A01: A flip-flop is a bistable circuit.

E7A02: A decade counter produces one output pulse for every 10 input pulses.

E7A03: A flip-flop can divide the frequency of a pulse train by 2.

E7A04: 4 flip-flops are required to divide a signal frequency by 16.

E7A05: An astable multivibrator is a circuit that continuously alternates between two states without an external clock signal.

E7A06: A monostable multivibrator switches temporarily to an alternate state for a set time.

E7A07: A NAND gate produces a 0 at its output only if all inputs are 1.

E7A08: An OR gate produces a 1 at its output if any input is 1.

E7A09: A two-input exclusive NOR gate produces a 0 at its output if one and only one of its inputs is 1.

E7A10: A truth table is a list of inputs and corresponding outputs for a digital device.

E7A11: In positive logic, high voltage represents a 1 and low voltage represents a 0.

Group E7B - Amplifier classes, circuits, distortion, and parasitics

E7B01: In a push-pull, Class AB amplifier, each active element conducts for more than 180 degrees but less than 360 degrees of the signal cycle.

E7B02: A Class D amplifier is an amplifier that uses switching technology to achieve high efficiency.

E7B03: A filter to remove harmonic content is required at the output of an RF switching amplifier.

E7B04: The operating point of a Class A common emitter amplifier is approximately halfway between saturation and cutoff.

E7B05: Unwanted oscillations in an RF power amplifier can be prevented by installing parasitic suppressors and/or neutralizing the stage.

E7B06: A grounded-grid amplifier is characterized by low input impedance.

E7B07: Using a Class C amplifier to amplify a single-sideband phone signal causes signal distortion and excessive bandwidth.

E7B08: Switching amplifiers are more efficient than linear amplifiers because the switching device is at saturation or cutoff most of the time.

E7B09: An emitter follower, or common collector, amplifier has input and output signals that are in-phase.

Figure E7-1

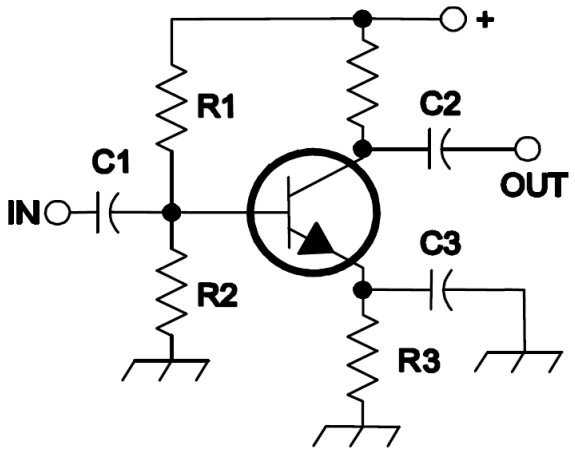

E7B10: In Figure E7-1, R1 and R2 provide voltage divider bias.

Figure E7-1

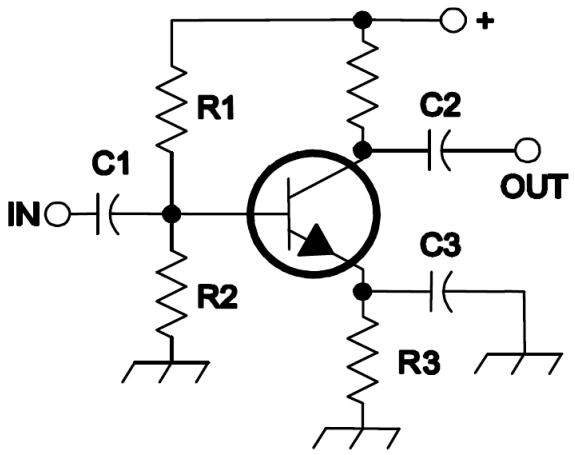

E7B11: In Figure E7-1, the purpose of R3 is to provide self bias.

Figure E7-1

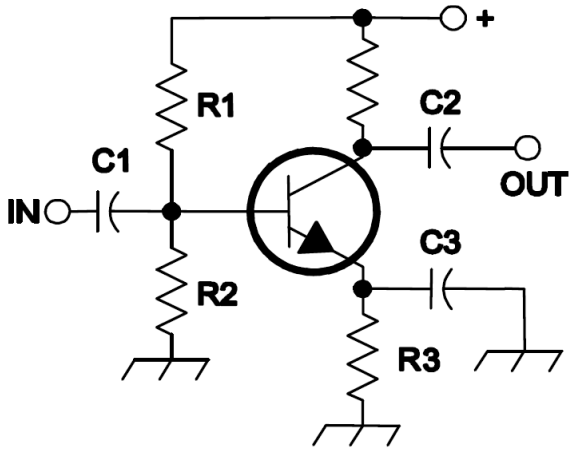

E7B12: The amplifier circuit shown in Figure E7-1 is a common emitter amplifier.

Group E7C - Filters, matching networks, and impedance transformation

E7C01: In a low-pass filter Pi-network, a capacitor is connected between the input and ground, another capacitor is connected between the output and ground, and an inductor is connected between the input and output.

E7C02: A T-network with series capacitors and a shunt inductor has a high-pass frequency response.

E7C03: The purpose of adding an inductor to a Pi-network to create a Pi-L-network is to provide greater harmonic suppression.

E7C04: An impedance-matching circuit transforms a complex impedance to a resistive impedance by canceling the reactive part of the impedance and changing the resistive part to the desired value.

E7C05: A Chebyshev filter has ripple in the passband and a sharp cutoff.

E7C06: An elliptical filter has an extremely sharp cutoff with one or more notches in the stop band.

E7C07: A Pi-L network is a Pi-network with an additional output series inductor.

E7C08: A helical filter is most frequently used as a band-pass or notch filter in VHF and UHF transceivers.

E7C09: A crystal lattice filter is a filter for low-level signals made using quartz crystals.

E7C10: A 2-meter band repeater duplexer uses a cavity filter.

E7C11: Shape factor measures a filter's ability to reject signals in adjacent channels.

Group E7D - Power supplies, regulators, and solar controllers

E7D01: A linear electronic voltage regulator works by varying the conduction of a control element to maintain a constant output voltage.

E7D02: A switchmode voltage regulator works by varying the duty cycle of pulses input to a filter.

E7D03: A Zener diode is used as a stable voltage reference.

E7D04: A three-terminal voltage regulator is a series regulator.

E7D05: A shunt regulator is a type of linear voltage regulator that operates by loading the unregulated voltage source.

Figure E7-2

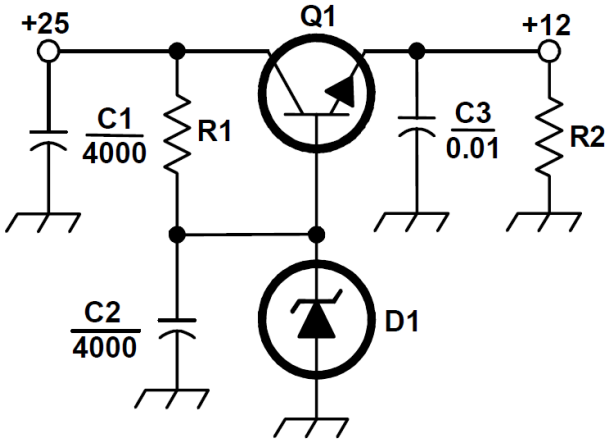

E7D06: The purpose of Q1 in the circuit shown in Figure E7-2 is to control the current to keep the output voltage constant.

Figure E7-2

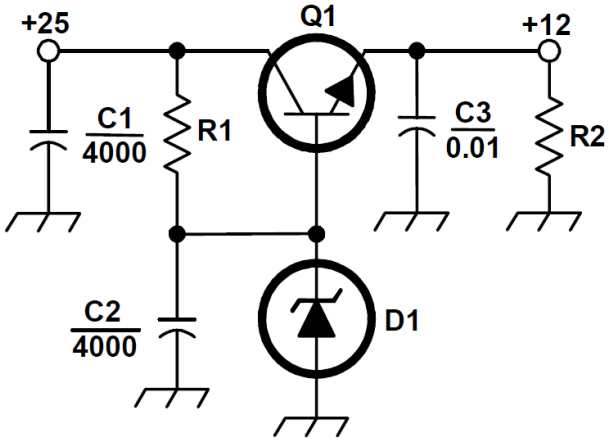

E7D07: The purpose of C2 in the circuit shown in Figure E7-2 is that it bypasses rectifier output ripple around D1.

Figure E7-2

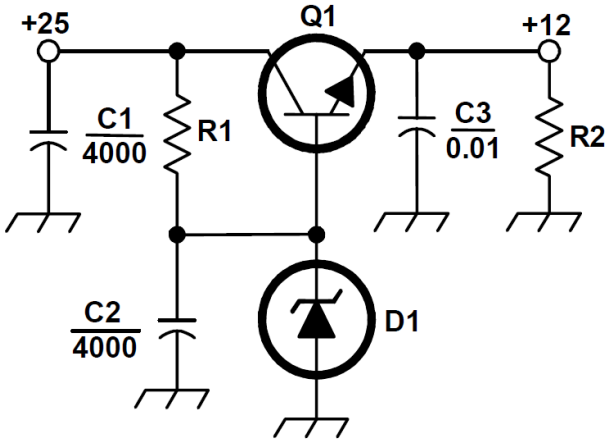

E7D08: The type of circuit shown in Figure E7-2 is a linear voltage regulator.

E7D09: Battery operating time is calculated by dividing the battery capacity in amp-hours by the average current.

E7D10: A switching type power supply is less expensive and lighter than an equivalent linear power supply because its high frequency inverter design uses much smaller transformers and filter components for an equivalent power output.

E7D11: The purpose of an inverter connected to a solar panel output is to convert the panel's output from DC to AC.

E7D12: The dropout voltage of a linear voltage regulator is the minimum input-to-output voltage required to maintain regulation.

E7D13: Power dissipated by a series linear voltage regulator is calculated as the voltage difference from input to output multiplied by the output current.

E7D15: The purpose of a step-start circuit in a high-voltage power supply is to allow the filter capacitors to charge gradually.

Group E7E - Modulation, detectors, and mixer circuits

E7E01: FM phone signals can be generated by using reactance modulation of a local oscillator.

E7E02: A reactance modulator produces PM or FM signals by varying a capacitance.

E7E03: A frequency discriminator is a circuit for detecting FM signals.

E7E04: One way to produce a single-sideband phone signal is to use a balanced modulator followed by a filter.

E7E05: A pre-emphasis network is added to an FM speech channel to boost the higher audio frequencies.

E7E06: De-emphasis is used in FM communications receivers for compatibility with transmitters using phase modulation.

E7E07: In radio communications, the term baseband refers to the frequency range occupied by a message signal prior to modulation.

E7E08: The principal frequencies that appear at the output of a mixer are the two input frequencies along with their sum and difference frequencies.

E7E09: When the input signal levels to a mixer are too high, spurious mixer products are generated.

E7E10: A diode envelope detector functions by rectification and filtering of RF signals.

E7E11: A product detector is used for demodulating SSB signals.

Group E7F - SDR fundamentals, DSP, and conversion

E7F01: In software defined radios, direct sampling means the incoming RF is digitized by an analog-to-digital converter without being mixed with a local oscillator signal.

E7F02: An adaptive digital signal processing audio filter is used to remove unwanted noise from a received SSB signal.

E7F03: An SSB signal is generated using a Hilbert-transform filter.

E7F04: An SSB signal is generated using digital signal processing by combining signals in a quadrature phase relationship.

E7F05: An analog signal must be sampled at least twice the rate of the highest frequency component of the signal to be accurately reproduced.

E7F06: The minimum number of bits required to sample a signal with a range of 1 volt at a resolution of 1 millivolt is 10 bits.

E7F07: A Fast Fourier Transform performs the function of converting signals from the time domain to the frequency domain.

E7F08: Decimation is the process of reducing the effective sample rate by removing samples.

E7F09: An anti-aliasing filter is required in a decimator because it removes high-frequency signal components that would otherwise be reproduced as lower frequency components.

E7F10: In a direct-sampling software defined radio (SDR), the receiver analog-to-digital converter sample rate determines the maximum receive bandwidth.

E7F11: For a direct-sampling software defined receiver in the absence of atmospheric or thermal noise, the minimum detectable signal level is set by the reference voltage level and the sample width in bits.

E7F12: Finite Impulse Response (FIR) filters can delay all frequency components of the signal by the same amount.

E7F13: In a digital signal processing filter, taps provide incremental signal delays for filter algorithms.

E7F14: Using more taps in a digital signal processing filter allows it to create a sharper filter response.

Group E7G - Operational amplifier characteristics and uses

E7G01: The typical output impedance of an op-amp is very low.

E7G02: Adding a capacitor across the feedback resistor in the circuit in E7-3 produces a low-pass filter frequency response.

E7G03: The typical input impedance of an op-amp is very high.

E7G04: Op-amp input offset voltage is the differential input voltage needed to bring the open loop output voltage to zero.

E7G05: Unwanted ringing and audio instability in an op-amp audio filter can be prevented by restricting both gain and Q.

E7G06: The gain-bandwidth of an operational amplifier is the frequency at which the open-loop gain of the amplifier equals one.

E7G07: The voltage gain expected from the circuit in Figure E73 when R1 is 10 ohms and RF is 470 ohms is 47.

E7G08: The gain of an ideal operational amplifier does not vary with frequency.

Figure E7-3

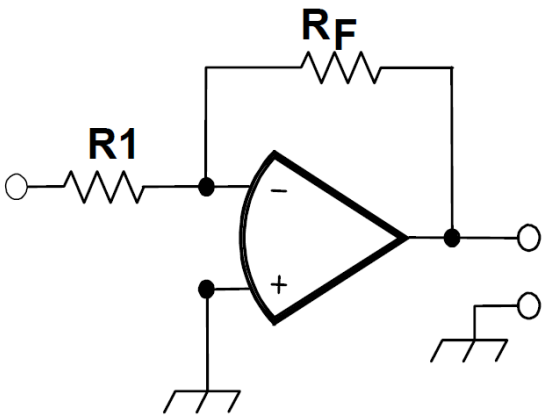

E7G09: In the circuit shown in Figure E7-3, if R1 is 1,000 ohms, RF is 10,000 ohms, and 0.23 volts DC is applied to the input, the output voltage will be -2.3 volts.

Figure E7-3

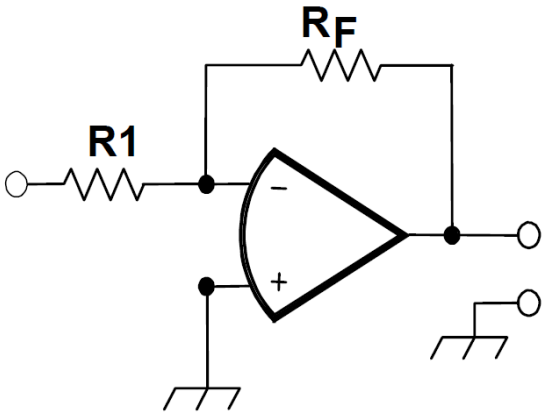

E7G10: The absolute voltage gain expected from the circuit in Figure E7-3 when R1 is 1,800 ohms and RF is 68 kilohms is 38.

Figure E7-3

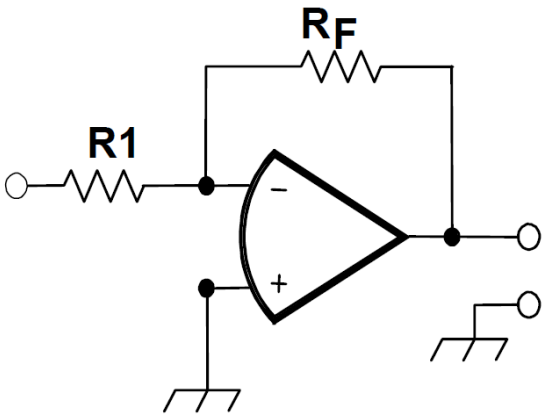

E7G11: The absolute voltage gain from the circuit in Figure E7-3 when R1 is 3,300 ohms and RF is 47 kilohms is 14.

E7G12: An operational amplifier is a high-gain, direct-coupled differential amplifier with very high input impedance and very low output impedance.

Group E7H - Oscillators, synthesizers, PLLs, DDS, stability

E7H01: Three common oscillator circuits are the Colpitts, Hartley, and Pierce oscillators.

E7H02: A microphonic is a condition where mechanical vibration causes changes in oscillator frequency.

E7H03: A phase-locked loop is an electronic servo loop consisting of a phase detector, a low-pass filter, a voltage-controlled oscillator, and a stable reference oscillator.

E7H04: In a Colpitts oscillator, positive feedback is supplied through a capacitive divider.

E7H05: In a Pierce oscillator, positive feedback is supplied through a quartz crystal.

E7H06: A phase-locked loop can perform frequency synthesis and FM demodulation.

E7H07: An oscillator’s microphonic responses can be reduced by mechanically isolating the oscillator circuitry from its enclosure.

E7H08: NP0 capacitors can be used to reduce thermal drift in crystal oscillators.

E7H09: A frequency synthesizer circuit that uses a phase accumulator, lookup table, digital-to-analog converter, and a low-pass anti-alias filter is called a direct digital synthesizer.

E7H10: The lookup table of a direct digital synthesizer (DDS) contains amplitude values that represent the desired waveform.

E7H11: The major spectral impurity components of direct digital synthesizers are spurious signals at discrete frequencies.

E7H12: A crystal oscillator operates on the frequency specified by the crystal manufacturer by providing the crystal with a specified parallel capacitance.

E7H13: Highly accurate and stable oscillators needed for microwave transmission and reception can be provided using any of the listed techniques.

SUBELEMENT E8 - Signals, Modulation, and Emissions

Group E8A - Fourier analysis, RMS, PEP, and conversion

E8A01: Fourier analysis shows that a square wave is made up of a sine wave and its odd harmonics.

E8A02: Successive approximation is a type of analog-to-digital conversion.

E8A03: In the time domain, a signal is described by its amplitude at different times.

E8A04: With respect to analog-to-digital converters, dither is a small amount of noise added to the input signal to reduce quantization noise.

E8A05: A true-RMS calculating meter measures RMS voltage accurately for both sinusoidal and non-sinusoidal signals.

E8A06: The approximate ratio of PEP-to-average power in an unprocessed single-sideband phone signal is 2.5 to 1.

E8A07: The PEP-to-average power ratio of an unprocessed single-sideband phone signal is determined by the speech characteristics.

E8A08: Direct or flash conversion analog-to-digital converters are used for a software defined radio because their very high speed allows digitizing high frequencies.

E8A09: An analog-to-digital converter with 8-bit resolution can encode 256 different input levels.

E8A10: A low-pass filter used at the output of a digital-to-analog converter removes spurious sampling artifacts from the output signal.

E8A11: Total harmonic distortion is a measure of the quality of an analog-to-digital converter.

Group E8B - Modulation methods, index, and multiplexing schemes

E8B01: The modulation index of an FM signal is the ratio of the frequency deviation to the modulating signal frequency.

E8B02: The modulation index of a phase-modulated emission does not depend on the RF carrier frequency.

E8B03: The modulation index of an FM phone signal with a maximum frequency deviation of 3000 Hz and a highest modulating frequency of 1000 Hz is 3.

E8B04: The modulation index of an FM phone signal having a maximum carrier deviation of plus or minus 6 kHz and a highest modulating frequency of 2 kHz is 3.

E8B05: The deviation ratio of an FM phone signal with a maximum frequency swing of plus or minus 5 kHz and a highest modulation frequency of 3 kHz is 1.67.

E8B06: The deviation ratio of an FM phone signal with a maximum frequency swing of plus or minus 7.5 kHz and a highest modulation frequency of 3.5 kHz is 2.14.

E8B07: Orthogonal frequency-division multiplexing (OFDM) is a technique used for digital modes in amateur communication.

E8B08: Orthogonal frequency-division multiplexing (OFDM) is a digital modulation technique using subcarriers at frequencies chosen to avoid intersymbol interference.

E8B09: Deviation ratio is the ratio of the maximum carrier frequency deviation to the highest audio modulating frequency.

E8B10: Frequency division multiplexing (FDM) is the process of dividing the transmitted signal into separate frequency bands that each carry a different data stream.

E8B11: Digital time division multiplexing is a method in which two or more signals are arranged to share discrete time slots of a data transmission.

Group E8C - Digital modes, bandwidth, coding, constellations

E8C01: Quadrature Amplitude Modulation (QAM) is the transmission of data by modulating the amplitude of two carriers of the same frequency but 90 degrees out of phase.

E8C02: Symbol rate in a digital transmission is the rate at which the waveform changes to convey information.

E8C03: The phase of a PSK signal should be changed at the zero crossing of the RF signal to minimize bandwidth.

E8C04: The technique that minimizes the bandwidth of a PSK31 signal is the use of sinusoidal data pulses.

E8C05: The approximate bandwidth of a 13-WPM International Morse Code transmission is 52 Hz.

E8C06: The bandwidth of an FT8 signal is 50 Hz.

E8C07: The bandwidth of a 4,800-Hz frequency shift, 9,600-baud ASCII FM transmission is 15.36 kHz.

E8C08: ARQ accomplishes error correction by requesting a retransmission if errors are detected.

E8C09: Gray code is a digital code that allows only one bit to change between sequential code values.

E8C10: Data rate can be increased without increasing bandwidth by using a more efficient digital code.

E8C11: The symbol rate and the baud rate are the same.

E8C12: The bandwidth of a transmitted CW signal is affected by the keying speed and the shape factor (rise and fall time).

E8C13: The constellation diagram of a QAM or QPSK signal describes the possible phase and amplitude states for each symbol.

E8C14: Nodes in a mesh network have Internet Protocol (IP) addresses.

E8C15: Individual nodes use discovery and link establishment protocols to form a mesh network.

Group E8D - Keying defects, overmodulation, codes, spread spectrum

E8D01: Received spread spectrum signals are resistant to interference because signals not using the spread spectrum algorithm are suppressed in the receiver.

E8D02: The spread spectrum communications technique that uses a high-speed binary bit stream to shift the phase of an RF carrier is called direct sequence.

E8D03: Spread spectrum frequency hopping is the technique of rapidly varying the frequency of a transmitted signal according to a pseudorandom sequence.

E8D04: The primary effect of an extremely short rise or fall time on a CW signal is the generation of key clicks.

E8D05: The most common method of reducing key clicks is to increase keying waveform rise and fall times.

E8D06: Including parity bits in ASCII characters allows some types of errors to be detected.

E8D07: A common cause of overmodulation of AFSK signals is excessive transmit audio levels.

E8D08: Intermodulation Distortion (IMD) is the parameter used to evaluate distortion of an AFSK signal caused by excessive input audio levels.

E8D09: An acceptable maximum IMD level for an idling PSK signal is -30 dB.

E8D10: Baudot uses 5 data bits per character and 2 characters as letters/figures shift codes, while ASCII uses 7 or 8 data bits per character and has no letters/figures shift code.

E8D11: One advantage of using ASCII code for data communications is that it is possible to transmit both uppercase and lowercase text.

SUBELEMENT E9 - Antennas and Transmission Lines

Group E9A - Antenna gain, efficiency, ERP, and EIRP

E9A01: An isotropic radiator is a hypothetical, lossless antenna that has equal radiation intensity in all directions and is used as a reference for antenna gain.

E9A02: A repeater station with 150 watts transmitter power output, 2 dB feed line loss, 2.2 dB duplexer loss, and 7 dBd antenna gain has an effective radiated power (ERP) of 286 watts.

E9A03: Effective radiated power is the term describing total radiated power that takes into account all gains and losses.

E9A04: The feed point impedance of an antenna is affected by the antenna height.

E9A05: The term “ground gain” means an increase in signal strength from ground reflections in the environment of the antenna.

E9A06: The effective radiated power (ERP) of a repeater station with 200 watts transmitter power output, 4 dB feed line loss, 3.2 dB duplexer loss, 0.8 dB circulator loss, and 10 dBd antenna gain is 317 watts.

E9A07: The effective isotropic radiated power (EIRP) of a repeater station with 200 watts transmitter power output, 2 dB feed line loss, 2.8 dB duplexer loss, 1.2 dB circulator loss, and 7 dBi antenna gain is 252 watts.

E9A08: The 5.8 GHz frequency band has the smallest first Fresnel zone.

E9A09: Antenna efficiency is the radiation resistance divided by the total resistance.

E9A10: Installing a ground radial system improves the efficiency of a ground-mounted quarter-wave vertical antenna.

E9A11: Soil conductivity determines ground losses for a ground-mounted vertical antenna operating on HF.

E9A12: An antenna that has 6 dB gain over an isotropic radiator has 3.85 dB gain compared to a half-wavelength dipole.

Group E9B - Antenna patterns, gain, and modeling

Figure E9-1

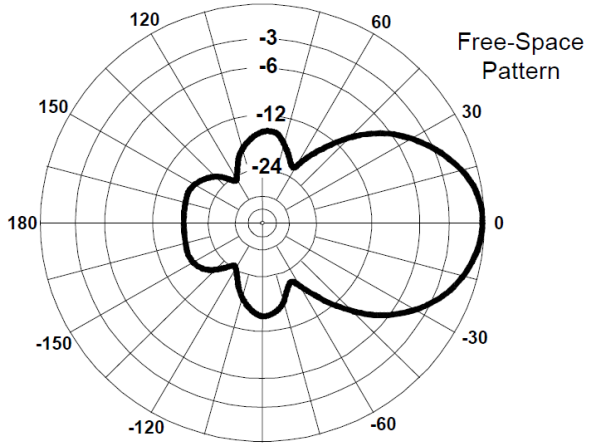

E9B01: The 3 dB beamwidth of the antenna radiation pattern shown in Figure E9-1 is 50 degrees.

Figure E9-1

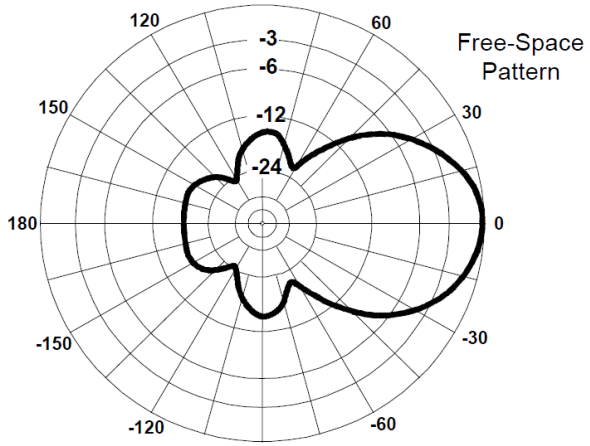

E9B02: The front-to-back ratio of the antenna radiation pattern shown in Figure E9-1 is 18 dB.

Figure E9-1

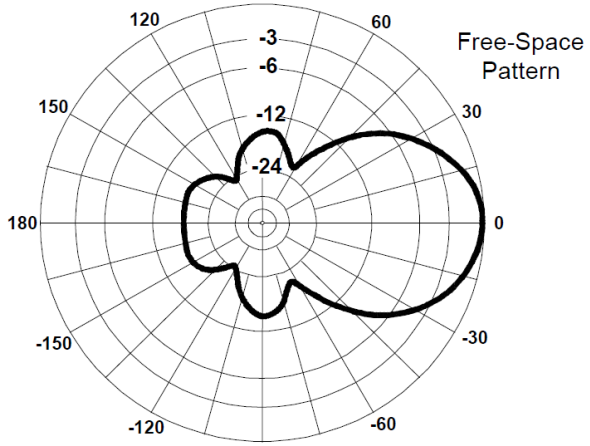

E9B03: The front-to-side ratio of the antenna radiation pattern shown in Figure E9-1 is 14 dB.

E9B04: The front-to-back ratio of the radiation pattern shown in Figure E9-2 is 28 dB.

Figure E9-2

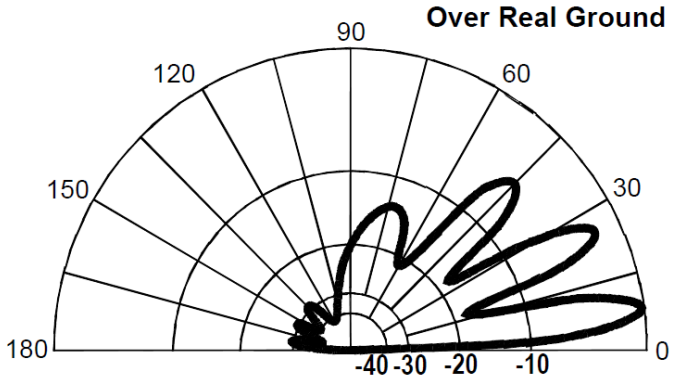

E9B05: The antenna pattern shown in Figure E9-2 is an elevation pattern.

Figure E9-2

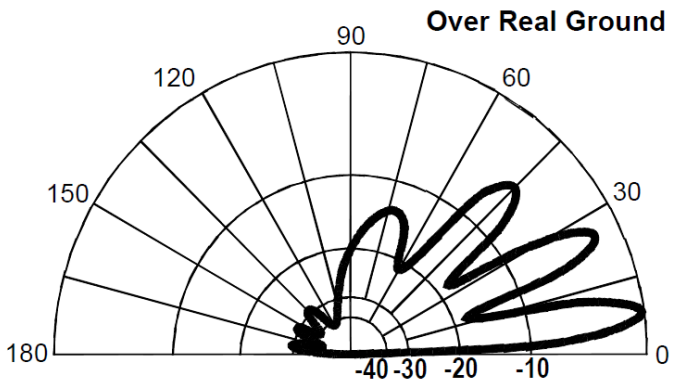

E9B06: The elevation angle of peak response in the antenna radiation pattern shown in Figure E9-2 is 7.5 degrees.

E9B07: A lossless antenna with gain and an isotropic radiator driven by the same power radiate the same power.

E9B08: The far field of an antenna is the region where the shape of the radiation pattern no longer varies with distance.

E9B09: The Method of Moments is a commonly used analysis technique for modeling antennas.

E9B10: In a Method of Moments analysis, a wire is modeled as a series of segments, each having a uniform value of current.

E9B11: A disadvantage of decreasing the number of wire segments in an antenna model below 10 segments per half-wavelength is that the computed feed point impedance may be incorrect.

Group E9C - Wire antennas, arrays, and ground effects

E9C01: Two 1/4-wavelength vertical antennas spaced 1/2-wavelength apart and fed 180 degrees out of phase produce a figure-eight radiation pattern oriented along the axis of the array.

E9C02: Two 1/4-wavelength vertical antennas spaced 1/4-wavelength apart and fed 90 degrees out of phase produce a cardioid radiation pattern.

E9C03: Two 1/4-wavelength vertical antennas spaced 1/2-wavelength apart and fed in phase produce a figure-eight radiation pattern broadside to the axis of the array.

E9C04: As the length of an unterminated long wire antenna is increased, additional lobes form in the radiation pattern, with the major lobes becoming increasingly aligned with the axis of the antenna.

E9C05: Feeding an off-center-fed dipole (OCFD) between the center and one end instead of at the midpoint is done to create a similar feed point impedance on multiple bands.

E9C06: Adding a terminating resistor to a rhombic or long-wire antenna changes its radiation pattern from bidirectional to unidirectional.

E9C07: The approximate feed point impedance at the center of a two-wire half-wave folded dipole antenna is 300 ohms.

E9C08: A folded dipole antenna is a half-wave dipole with an additional parallel wire connecting its two ends.

E9C09: A G5RV antenna is a wire antenna that is center-fed through a specific length of open-wire line connected to a balun and a coaxial feed line.

E9C10: A Zepp antenna is an end-fed half-wavelength dipole.

E9C11: When a vertically polarized antenna is mounted over seawater instead of soil, its radiation at low elevation angles increases.

E9C12: An extended double Zepp antenna is a center-fed 1.25-wavelength dipole antenna.

E9C13: As the height of a horizontally polarized antenna above ground increases, the takeoff angle of its lowest elevation lobe decreases.

E9C14: For a horizontally-polarized antenna mounted above a long slope, the main lobe takeoff angle decreases in the downhill direction compared to the same antenna mounted above flat ground.

Group E9D - Yagis, dishes, short antennas, and grounding

E9D01: When the operating frequency is doubled, the gain of an ideal parabolic reflector antenna increases by 6 dB.

E9D02: Two linearly polarized Yagi antennas can be used to produce circular polarization by arranging two Yagis on the same axis and perpendicular to each other with the driven elements at the same point on the boom and fed 90 degrees out of phase.

E9D03: The most efficient location for a loading coil on an electrically short whip is near the center of the vertical radiator.

E9D04: Antenna loading coils should have a high ratio of reactance to resistance to maximize efficiency.

E9D05: A Yagi's driven element is approximately 1/2 wavelength long.

E9D06: When one or more loading coils are used to resonate an electrically short antenna, the SWR bandwidth is decreased.

E9D07: Top loading an electrically short HF vertical antenna improves its radiation efficiency.

E9D08: As the Q of an antenna increases, its SWR bandwidth decreases.

E9D09: The function of a loading coil in an electrically short antenna is to resonate the antenna by cancelling the capacitive reactance.

E9D10: The radiation resistance of a base-fed whip antenna decreases when operated below its resonant frequency.

E9D11: Most two-element Yagis with normal spacing use a reflector instead of a director because this configuration provides higher gain.

E9D12: The purpose of making a Yagi's parasitic elements either longer or shorter than resonance is the control of phase shift.

Group E9E - Antenna impedance matching, phasing, and dividers

E9E01: A beta or hairpin matching system for Yagi antennas requires the driven element to be insulated from the boom.

E9E02: A gamma match is an antenna matching system that matches coaxial cable to an antenna by connecting the shield to the center of the antenna and the conductor a fraction of a wavelength to one side.

E9E03: A stub match is a matching system that uses a short length of transmission line connected in parallel with the feed line at or near the feed point.

E9E04: The purpose of the series capacitor in a gamma match is to cancel unwanted inductive reactance.

E9E05: A beta or hairpin matching system requires a Yagi driven element feed point impedance that is capacitive, meaning the driven element is electrically shorter than 1/2 wavelength.

E9E06: A quarter-wave Q-section used to match a 100-ohm feed point impedance to a 50-ohm transmission line should have a characteristic impedance of 75 ohms.

E9E07: The parameter that describes the interaction of a load and transmission line is the reflection coefficient.

E9E08: A Wilkinson divider is used to divide power equally between two 50-ohm loads while maintaining a 50-ohm input impedance.

E9E11: The purpose of using multiple driven elements connected through phasing lines is to control the antenna's radiation pattern.

Group E9F - Transmission line types, properties, and microstrip

E9F01: The velocity factor of a transmission line is the velocity of a wave in the transmission line divided by the velocity of light in a vacuum.

E9F02: The insulating dielectric material has the biggest effect on the velocity factor of a transmission line.

E9F03: The electrical length of a coaxial cable is longer than its physical length because electromagnetic waves move more slowly in a coaxial cable than in air.

E9F04: A 1/2-wavelength transmission line that is shorted at the far end presents a very low impedance to an RF generator.

E9F05: Microstrip consists of precision printed circuit conductors above a ground plane that provide constant impedance interconnects at microwave frequencies.

E9F06: An air-insulated, parallel conductor transmission line that is electrically 1/2 wavelength long at 14.10 MHz has an approximate physical length of 10.6 meters.

E9F07: Parallel conductor transmission line has lower loss than coaxial cable with a plastic dielectric.

E9F08: Foam dielectric coaxial cable has less loss per unit length, is more flexible, and has different velocity factor than solid dielectric coaxial cable when all other parameters are the same.

E9F09: A 1/4-wavelength transmission line that is shorted at the far end presents a very high impedance to an RF generator.

E9F10: A 1/8-wavelength transmission line that is shorted at the far end presents an inductive reactance to an RF generator.

E9F11: A 1/8-wavelength transmission line that is open at the far end presents a capacitive reactance to an RF generator.

E9F12: A 1/4-wavelength transmission line that is open at the far end presents a very low impedance to an RF generator.

Group E9G - Using the Smith chart for matching

E9G01: A Smith chart can be used to calculate impedance along transmission lines.

E9G02: A Smith chart uses a coordinate system of resistance circles and reactance arcs.

E9G03: A Smith chart is often used to determine impedance and SWR values in transmission lines.

E9G04: A Smith chart is composed of two families of curves: resistance circles and reactance arcs.

E9G05: A common use for a Smith chart is to determine the length and position of an impedance matching stub.

Figure E9-3

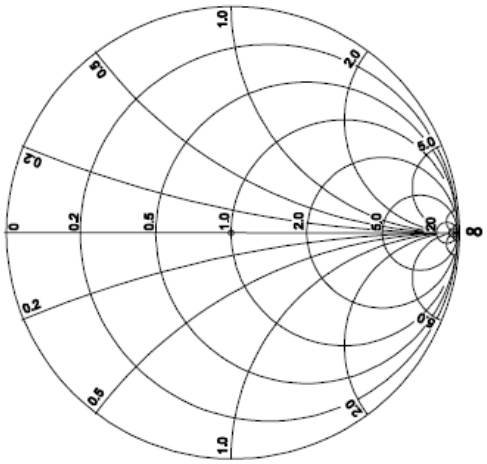

E9G06: On the Smith chart shown in Figure E9-3, the large outer circle on which the reactance arcs terminate is called the reactance axis.

Figure E9-3

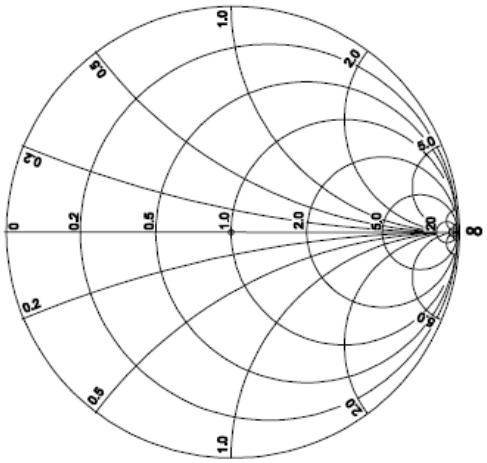

E9G07: On the Smith chart shown in Figure E9-3, the only straight line shown is the resistance axis.

E9G08: A Smith chart is normalized by reassigning the prime center's impedance value.

E9G09: Constant-SWR circles are often added as a third family of circles to a Smith chart during the process of designing impedance matching networks.

E9G10: On a Smith chart, the arcs represent points with constant reactance.

E9G11: The wavelength scales on a Smith chart are calibrated in fractions of the transmission line electrical wavelength.

Group E9H - Receiving antennas, RDF, Beverages, loops

E9H01: To achieve good performance at the desired frequency, a Beverage antenna should be at least one wavelength long.

E9H02: For 160- and 80-meter receiving antennas, atmospheric noise is so high that directivity is much more important than losses.

E9H03: Receiving directivity factor (RDF) is the peak antenna gain compared to the average gain over the hemisphere around and above the antenna.

E9H04: Placing an electrostatic shield around a small-loop direction-finding antenna eliminates unbalanced capacitive coupling to the antenna's surroundings, improving the depth of its nulls.

E9H05: A small wire-loop antenna for direction finding presents the challenge that it has a bidirectional null pattern.

E9H06: The correct value of terminating resistance for a Beverage antenna is indicated by minimum variation in SWR over the desired frequency range.

E9H07: A Beverage antenna's termination resistor functions to absorb signals from the reverse direction.

E9H08: The function of a sense antenna is to modify the pattern of a DF antenna to provide a null in only one direction.

E9H09: A single-turn, terminated loop such as a pennant antenna produces a cardioid radiation pattern.

E9H10: The output voltage of a multiple-turn receiving loop antenna can be increased by increasing the number of turns and/or the area enclosed by the loop.

E9H11: A cardioid pattern antenna is useful for direction-finding antennas because it has a single null in its radiation pattern.

SUBELEMENT E0 - Safety and Hazard Prevention

Group E0A - RF safety, hazardous materials, and grounding

E0A01: The primary function of an external earth connection or ground rod is lightning charge dissipation.

E0A02: When evaluating RF exposure levels from your station at a neighbor's home, you must ensure signals from your station are less than the uncontrolled maximum permissible exposure (MPE) limits.

E0A03: The FCC human body RF exposure limits are most restrictive over the frequency range from 30 to 300 MHz.

E0A04: When evaluating a site with multiple transmitters operating at the same time, the operators and licensees of each transmitter that produces 5 percent or more of its MPE limit in areas where the total MPE limit is exceeded are responsible for mitigating over-exposure situations.

E0A05: Operating at microwave frequencies can create a hazard because the high gain antennas commonly used can result in high exposure levels.

E0A06: There are separate electric (E) and magnetic (H) MPE limits at frequencies below 300 MHz because, at those frequencies, the body absorbs more energy from electric fields than from magnetic fields, the body acts more like a dielectric and less like a conductor, and the body's dimensions are usually shorter than the wavelength.

E0A07: In tower safety, "100% tie-off" means that at least one lanyard is attached to the tower at all times.

E0A08: SAR measures the rate at which RF energy is absorbed by the body.

E0A09: Hand-held transceivers sold before May 3, 2021 are exempt from RF exposure evaluations.

E0A10: An RF exposure evaluation must always be performed on an amateur station operating on 80 meters.

E0A11: While climbing, lanyards should be attached to tower legs.

E0A12: When working above ground on a tower, a shock-absorbing lanyard should be attached to the tower above the climber's head level.