FCC Amateur Extra (Element 4) Statements of Fact

Literal study guide · Grouped by subelement and question group

In this augmented Q&A; edition, each question and answer line is verbatim from the official question pool. The Notes line under each item is AI-generated study context.

Workbook format: review each statement, speak it aloud, and mark weak items.

SUBELEMENT E1 - FCC Rules and Licensing

Group E1A - Frequency privileges, bands, and special power limits

E1A01

Q: Why is it not legal to transmit a 3 kHz bandwidth USB signal with a carrier frequency of 14.348 MHz?

A: The upper 1 kHz of the signal is outside the 20-meter band.

Notes: USB voice signals extend from the carrier frequency upward by their bandwidth, so a 3 kHz USB signal at 14.348 MHz occupies 14.348 to 14.351 MHz. This causes the top 1 kHz of the signal to fall outside the authorized 20-meter band, making the transmission illegal.

E1A02

Q: When using a transceiver that displays the carrier frequency of phone signals, which of the following displayed frequencies represents the lowest frequency at which a properly adjusted LSB emission will be totally within the band?

A: 3 kHz above the lower band edge.

Notes: An LSB phone signal occupies bandwidth extending above the displayed carrier frequency, so the carrier must be set high enough to keep the entire sideband inside the band. A 3 kHz offset above the lower band edge ensures that a typical 3 kHz-wide LSB signal remains completely within the authorized frequency range.

E1A03

Q: What is the highest legal carrier frequency on the 20-meter band for transmitting a 2.8 kHz wide USB data signal?

A: 14.1472 MHz.

Notes: The upper band edge for 20 meters is 14.150 MHz, and FCC rules require that the entire transmitted signal, including its 2.8 kHz bandwidth, remain within the band. Subtracting 2.8 kHz from 14.150 MHz results in a maximum carrier frequency of 14.1472 MHz.

E1A04

Q: May an Extra class operator answer the CQ of a station on 3.601 MHz LSB phone?

A: No, the sideband components will extend beyond the edge of the phone band segment.

Notes: In LSB phone operation, the occupied bandwidth extends downward from the suppressed carrier frequency, so transmitting on 3.601 MHz would cause part of the signal to fall outside the authorized phone subband. FCC rules require that all transmitted energy remain within the designated phone band segment.

E1A05

Q: Who must be in physical control of the station apparatus of an amateur station aboard any vessel or craft that is documented or registered in the United States?

A: Any person holding an FCC issued amateur license or who is authorized for alien reciprocal operation.

Notes: FCC rules require that amateur stations on U.S.-documented or registered vessels be controlled by someone who is legally authorized to operate under U.S. amateur service regulations. This includes licensed U.S. amateurs and foreign amateurs operating under valid reciprocal operating authority.

E1A06

Q: What is the required transmit frequency of a CW signal for channelized 60 meter operation?

A: At the center frequency of the channel.

Notes: On the 60 meter band, FCC rules require all emissions, including CW, to be centered in the assigned channel to avoid interference and maintain the channelized structure. Tuning to the channel center frequency ensures compliance with the band’s specific channel-based allocation.

E1A07

Q: What is the maximum power permitted on the 2200-meter band?

A: 1 watt EIRP (equivalent isotropic radiated power).

Notes: FCC rules limit amateur operation on the 2200-meter band to 1 watt EIRP to minimize potential interference to other services using this low-frequency spectrum. EIRP includes both transmitter power and antenna gain, so amateurs must ensure the total radiated power does not exceed this 1 watt limit.

E1A08

Q: If a station in a message forwarding system inadvertently forwards a message that is in violation of FCC rules, who is primarily accountable for the rules violation?

A: The control operator of the originating station.

Notes: FCC rules place primary responsibility for message content on the control operator of the station that originates the transmission. In a forwarding network, this means the originating station's control operator is held chiefly accountable for any rule violations in the message.

E1A09

Q: Except in some parts of Alaska, what is the maximum power permitted on the 630-meter band?

A: 5 watts EIRP (equivalent isotropic radiated power).

Notes: The FCC limits amateur operation on the 630-meter band to 5 watts EIRP in most U.S. locations to control interference and ensure compatibility with other services. EIRP accounts for both transmitter output power and antenna gain, so operators must calculate their system to stay within this 5-watt EIRP limit.

E1A10

Q: If an amateur station is installed aboard a ship or aircraft, what condition must be met before the station is operated?

A: Its operation must be approved by the master of the ship or the pilot in command of the aircraft.

Notes: The FCC requires that the person in overall command of the vessel or aircraft authorize amateur station operation to ensure safety and operational control. This keeps radio use coordinated with the ship's or aircraft's primary communications and safety responsibilities.

E1A11

Q: What licensing is required when operating an amateur station aboard a US-registered vessel in international waters?

A: Any FCC-issued amateur license.

Notes: For a US-registered vessel, FCC amateur service rules apply regardless of location, including international waters. Therefore, any valid FCC-issued amateur license grants the operator permission to use an amateur station on board.

Group E1B - Station locations, restrictions, and special operations

E1B01

Q: Which of the following constitutes a spurious emission?

A: An emission outside the signal's necessary bandwidth that can be reduced or eliminated without affecting the information transmitted.

Notes: In amateur radio, any signal energy that lies outside the bandwidth needed to carry the intended information and can be removed without degrading that information is considered spurious. Spurious emissions are unwanted and must be limited to comply with FCC technical standards and prevent interference to other users.

E1B02

Q: Which of the following is an acceptable bandwidth for digital voice or slow-scan TV transmissions made on the HF amateur bands?

A: 3 kHz.

Notes: On the HF amateur bands, digital voice and slow-scan TV signals are expected to fit within a typical SSB channel, which is about 3 kHz wide. This bandwidth limit helps prevent interference and promotes efficient spectrum use as required by FCC rules for HF operation.

E1B03

Q: Within what distance must an amateur station protect an FCC monitoring facility from harmful interference?

A: 1 mile.

Notes: FCC monitoring stations perform sensitive signal measurements, so nearby amateur stations must avoid causing harmful interference. The 1 mile distance defines the protected zone around these facilities in the Amateur Extra rules.

E1B04

Q: What must the control operator of a repeater operating in the 70-centimeter band do if a radiolocation system experiences interference from that repeater?

A: Cease operation or make changes to the repeater that mitigate the interference.

Notes: In the 70-centimeter band, amateur repeaters are secondary users and must not cause harmful interference to primary services such as radiolocation. Therefore, the control operator is required to stop operation or modify the repeater so that the interference is resolved.

E1B05

Q: What is the National Radio Quiet Zone?

A: An area surrounding the National Radio Astronomy Observatory.

Notes: Radio emissions are restricted in the National Radio Quiet Zone to protect the sensitive observations made by the National Radio Astronomy Observatory. This helps minimize radio frequency interference to important radio astronomy research facilities located there.

E1B06

Q: Which of the following additional rules apply if you are erecting an amateur station antenna structure at a site at or near a public use airport?

A: You may have to notify the Federal Aviation Administration and register it with the FCC as required by Part 17 of the FCC rules.

Notes: Antenna structures near public use airports can pose potential hazards to air navigation, so the FAA and FCC require notice and registration under Part 17. This ensures the structure is properly evaluated, marked, and recorded for aviation safety and regulatory compliance.

E1B07

Q: To what type of regulations does PRB-1 apply?

A: State and local zoning.

Notes: PRB-1 is an FCC policy requiring state and local governments to reasonably accommodate amateur radio antennas in their zoning and land-use regulations. It specifically addresses how these non-federal authorities regulate the placement and height of amateur radio antenna structures.

E1B08

Q: What limitations may the FCC place on an amateur station if its signal causes interference to domestic broadcast reception, assuming that the receivers involved are of good engineering design?

A: The amateur station must avoid transmitting during certain hours on frequencies that cause the interference.

Notes: The FCC can limit when an amateur station may operate on particular frequencies to prevent harmful interference to properly designed broadcast receivers. This protects domestic broadcast reception while still allowing amateur operation at other times or on other frequencies.

E1B09

Q: Which amateur stations may be operated under RACES rules?

A: Any FCC-licensed amateur station certified by the responsible civil defense organization for the area served.

Notes: RACES operation is restricted to stations that are both FCC-licensed and specifically certified by the local civil defense authority. This ensures that emergency communications are coordinated and authorized within the served area during emergencies and civil defense activities.

E1B10

Q: What frequencies are authorized to an amateur station operating under RACES rules?

A: All amateur service frequencies authorized to the control operator.

Notes: RACES operation does not grant additional frequency privileges, so the station is limited to the same amateur bands and segments the control operator is already authorized to use. This ensures emergency communications stay within the operator's existing license class privileges and FCC regulations.

E1B11

Q: What does PRB-1 require of state and local regulations affecting amateur radio antenna size and structures?

A: Reasonable accommodations of amateur radio must be made.

Notes: Under PRB-1, the FCC directs state and local governments to reasonably accommodate amateur radio operations when regulating antennas. This protects the ability of licensed amateurs to communicate while still allowing local authorities to enforce legitimate zoning and safety regulations.

Group E1C - Automatic control, band rules, and foreign operation

E1C01

Q: What is the maximum bandwidth for a data emission on 60 meters?

A: 2.8 kHz.

Notes: On 60 meters, the FCC limits data emissions to a maximum bandwidth of 2.8 kHz to ensure compatibility and prevent interference within the shared channels. Amateur Extra operators must observe this 2.8 kHz limit when configuring digital modes on 60 meters.

E1C02

Q: Which of the following apply to communications transmitted to amateur stations in foreign countries?

A: Communications must be limited to those incidental to the purpose of the amateur service and remarks of a personal nature.

Notes: FCC rules and international agreements restrict third-party and international amateur communications to content that supports the amateur service's technical and operational purposes plus personal, noncommercial conversation. This maintains the noncommercial, self-training, and hobby nature of amateur radio across borders.

E1C03

Q: How long must an operator wait after filing a notification with the Utilities Technology Council (UTC) before operating on the 2200-meter or 630-meter band?

A: Operators may operate after 30 days, providing they have not been told that their station is within 1 kilometer of PLC systems using those frequencies.

Notes: The 30-day waiting period allows time for the UTC to determine whether nearby power line carrier (PLC) systems could be affected. If no notice of being within 1 kilometer of PLC operations on those frequencies is received, operation on 2200 meters or 630 meters may begin.

E1C04

Q: What is an IARP?

A: A permit that allows US amateurs to operate in certain countries of the Americas.

Notes: The IARP is an agreed-upon permit among certain nations in the Americas that recognizes a U.S. amateur's operating privileges when traveling. It simplifies temporary operation abroad by serving as a standardized authorization in participating countries.

E1C05

Q: Under what situation may a station transmit third party communications while being automatically controlled?

A: Only when transmitting RTTY or data emissions.

Notes: FCC rules for automatically controlled stations restrict third party communications to RTTY or data modes to ensure predictable, regulated operation without a control operator present in real time. This limitation helps maintain control and accountability for message content in unattended digital operation on the amateur bands.

E1C06

Q: Which of the following is required in order to operate in accordance with CEPT rules in foreign countries where permitted?

A: You must have a copy of FCC Public Notice DA 16-1048.

Notes: FCC Public Notice DA 16-1048 implements the CEPT amateur radio license arrangements for U.S. amateurs and serves as your proof of operating authority when visiting participating countries. Carrying a copy of this document shows foreign regulators that you are authorized to operate under CEPT rules.

E1C07

Q: What notifications must be given before transmitting on the 630- or 2200-meter bands?

A: Operators must inform the Utilities Technology Council (UTC) of their call sign and coordinates of the station.

Notes: Notification to the Utilities Technology Council (UTC) with your call sign and station coordinates is required so that potential interference to power line carrier systems and utility infrastructure can be evaluated. This coordination step is part of the FCC rules specific to operation on the 630- and 2200-meter bands.

E1C08

Q: What is the maximum permissible duration of a remotely controlled station’s transmissions if its control link malfunctions?

A: 3 minutes.

Notes: FCC rules limit a remotely controlled station to no more than 3 minutes of transmitting after control is lost to prevent unchecked, potentially interfering signals. This time limit helps ensure that malfunctioning or uncontrolled transmissions do not continue indefinitely on the air.

E1C09

Q: What is the highest modulation index permitted at the highest modulation frequency for angle modulation below 29.0 MHz?

A: 1.0.

Notes: FCC rules limit the modulation index for angle modulation below 29.0 MHz to 1.0 at the highest modulation frequency to control occupied bandwidth and interference. This ensures the signal remains within its authorized emission limits for Amateur Extra operators.

E1C10

Q: What is the maximum mean power level for a spurious emission below 30 MHz with respect to the fundamental emission?

A: - 43 dB.

Notes: FCC rules limit spurious emissions to -43 dB below the carrier to prevent interference on adjacent and nearby frequencies. This ensures that unwanted emissions are much weaker than the intended signal while operating below 30 MHz.

E1C11

Q: Which of the following operating arrangements allows an FCC-licensed US citizen to operate in many European countries, and amateurs from many European countries to operate in the US?

A: CEPT.

Notes: CEPT is an international reciprocal operating agreement that standardizes temporary amateur radio operating privileges among member countries. Under CEPT, eligible US and European amateurs can legally operate in each other’s countries without obtaining an additional local amateur license.

E1C12

Q: In what portion of the 630-meter band are phone emissions permitted?

A: The entire band.

Notes: FCC rules allow voice (phone) operation anywhere within the authorized 630-meter amateur band segment. This means there is no sub-band restriction for phone emissions on 630 meters for Amateur Extra licensees.

Group E1D - Space, balloon, and one-way communications rules

E1D01

Q: What is the definition of telemetry?

A: One-way transmission of measurements at a distance from the measuring instrument.

Notes: In the Amateur Extra exam context, telemetry refers specifically to sending measurement or status data in one direction from the remote instrument back to a control or monitoring point. This definition distinguishes it from two-way control or voice communications.

E1D02

Q: Which of the following may transmit encrypted messages?

A: Telecommand signals from a space telecommand station.

Notes: The FCC rules specifically allow encryption when it is used for telecommand of a space station or radio control from a space telecommand station. This exception permits secure control of satellites while maintaining compliance with amateur service regulations.

E1D03

Q: What is a space telecommand station?

A: An amateur station that transmits communications to initiate, modify, or terminate functions of a space station.

Notes: In the Amateur Extra exam context, a space telecommand station specifically controls the operation of an amateur space station by sending signals that start, change, or stop its functions. This definition aligns with FCC rules governing amateur operation of satellites and other space-based stations.

E1D04

Q: Which of the following is required in the identification transmissions from a balloon-borne telemetry station?

A: Call sign.

Notes: The FCC requires all amateur stations, including balloon-borne telemetry stations, to identify with their call sign so the transmitting station can be clearly and uniquely identified. Including the call sign in the telemetry identification satisfies this regulatory requirement for proper station identification on the Amateur Extra exam.

E1D05

Q: What must be posted at the location of a station being operated by telecommand on or within 50 kilometers of the Earth’s surface?

A: All these choices are correct:
- A photocopy of the station license
- A label with the name, address, and telephone number of the station licensee
- A label with the name, address, and telephone number of the control operator

Notes: For telecommanded stations near the Earth's surface, the rules require clear identification of the licensee and how to reach the control point. Listing the name, call sign, and contact information ensures accountability and the ability to promptly control or shut down the station if necessary.

E1D06

Q: What is the maximum permitted transmitter output power when operating a model craft by telecommand?

A: 1 watt.

Notes: FCC rules limit telecommand of model craft to a maximum transmitter output power of 1 watt to minimize interference and ensure safe shared use of the spectrum. Amateur Extra operators must observe this specific power cap when controlling model craft by radio.

E1D07

Q: Which of the following HF amateur bands include allocations for space stations?

A: 40 meters, 20 meters, 15 meters, and 10 meters.

Notes: The FCC allocates specific segments within the 40-meter, 20-meter, 15-meter, and 10-meter HF bands for amateur space station operation. Knowing which HF bands permit space station use is necessary for proper band planning and regulatory compliance on the Amateur Extra exam.

E1D08

Q: Which VHF amateur bands have frequencies authorized for space stations?

A: 2 meters.

Notes: The 2-meter band includes designated segments where amateur space stations are permitted to operate under FCC rules. This makes 2 meters the VHF amateur band with authorized space station frequencies for the Amateur Extra exam context.

E1D09

Q: Which UHF amateur bands have frequencies authorized for space stations?

A: 70 centimeters and 13 centimeters.

Notes: These two UHF bands include specific frequency segments allocated by the FCC and the ITU for amateur satellite and space station operation. Knowing which bands support space stations is essential for properly planning and licensing satellite communications in the Amateur Extra service.

E1D10

Q: Which amateur stations are eligible to be telecommand stations of space stations, subject to the privileges of the class of operator license held by the control operator of the station?

A: Any amateur station so designated by the space station licensee.

Notes: The space station licensee has the authority to designate which amateur stations may serve as its telecommand stations. Those stations must still operate within the operating privileges of the control operator’s license class under FCC rules for the Amateur Extra exam context.

E1D11

Q: Which amateur stations are eligible to operate as Earth stations?

A: Any amateur station, subject to the privileges of the class of operator license held by the control operator.

Notes: Under FCC Amateur Extra rules, Earth station operation is just another authorized operating mode and is allowed to any amateur station as long as the control operator stays within their license class frequency and privilege limits. The license class determines where and how that Earth station operation may occur on the amateur bands, not whether it is allowed at all.

E1D12

Q: Which of the following amateur stations may transmit one-way communications?

A: A space station, beacon station, or telecommand station.

Notes: These specific station types are allowed to transmit one-way signals because they support functions like satellite operation, propagation and activity monitoring, or remote control under FCC Amateur Extra rules. Other amateur stations are generally intended for two-way communications and do not have this blanket one-way transmission allowance.

Group E1E - Volunteer examiners, exams, and documentation

E1E01

Q: For which types of out-of-pocket expenses do the Part 97 rules state that VEs and VECs may be reimbursed?

A: Preparing, processing, administering, and coordinating an examination for an amateur radio operator license.

Notes: The FCC allows VEs and VECs to recover only their actual expenses incurred in running amateur license exams. This keeps the volunteer examination system non-commercial while still covering necessary exam-related costs.

E1E02

Q: Who is tasked by Part 97 with maintaining the pools of questions for all US amateur license examinations?

A: The VECs.

Notes: Under FCC Part 97 rules, the Volunteer Examiner Coordinators are formally designated to develop, organize, and maintain the official question pools for all amateur license exam elements. This centralized responsibility helps ensure consistency and regulatory compliance across all exam sessions nationwide.

E1E03

Q: What is a Volunteer Examiner Coordinator?

A: An organization that has entered into an agreement with the FCC to coordinate, prepare, and administer amateur operator license examinations.

Notes: In the FCC amateur radio licensing system, Volunteer Examiner Coordinators manage and oversee the volunteer examiners who give license exams. Their agreement with the FCC authorizes them to ensure exams are prepared, coordinated, and administered according to FCC rules.

E1E04

Q: What is required to be accredited as a Volunteer Examiner?

A: A VEC must confirm that the VE applicant meets FCC requirements to serve as an examiner.

Notes: Accreditation as a VE is granted only after a VEC verifies that the applicant satisfies the FCC’s eligibility standards for examiners. This ensures that only qualified and compliant individuals administer amateur radio license exams.

E1E05

Q: What must the VE team do with the application form if the examinee does not pass the exam?

A: Return the application document to the examinee.

Notes: FCC Amateur Extra exam procedures require that when an exam is failed, no application is filed and the original application form is given back to the candidate. This ensures incomplete or unsuccessful exam attempts are not submitted for licensing action.

E1E06

Q: Who is responsible for the proper conduct and necessary supervision during an amateur operator license examination session?

A: Each administering VE.

Notes: FCC rules assign responsibility for examination session conduct and supervision to each Volunteer Examiner who administers the test. This ensures accountability for exam integrity and compliance with Part 97 requirements.

E1E07

Q: What should a VE do if a candidate fails to comply with the examiner’s instructions during an amateur operator license examination?

A: Immediately terminate the candidate’s examination.

Notes: Examinations must be conducted under strict, orderly conditions to ensure fairness and integrity. Terminating the exam when a candidate does not follow instructions protects the validity of the test session and maintains FCC compliance.

E1E08

Q: To which of the following examinees may a VE not administer an examination?

A: Relatives of the VE as listed in the FCC rules.

Notes: FCC rules prohibit VEs from examining certain relatives to avoid conflicts of interest and ensure exam integrity. This maintains fairness and impartiality in the amateur radio licensing process.

E1E09

Q: What may be the penalty for a VE who fraudulently administers or certifies an examination?

A: Revocation of the VE's amateur station license grant and the suspension of the VE's amateur operator license grant.

Notes: The FCC can revoke the VE's station license and suspend their operator license to protect the integrity of the amateur radio licensing system. This strong penalty discourages fraud in the examination process and maintains trust in issued licenses.

E1E10

Q: What must the administering VEs do after the administration of a successful examination for an amateur operator license?

A: They must submit the application document to the coordinating VEC according to the coordinating VEC instructions.

Notes: Volunteer Examiners are required by FCC rules to forward successful exam results through their coordinating VEC. Following the coordinating VEC's specific submission instructions ensures the license application is properly processed and entered into the FCC system.

E1E11

Q: What must the VE team do if an examinee scores a passing grade on all examination elements needed for an upgrade or new license?

A: Three VEs must certify that the examinee is qualified for the license grant and that they have complied with the administering VE requirements.

Notes: FCC rules require that at least three VEs formally attest to both the examinee's qualification and the proper administration of the exam. This certification is what authorizes the FCC to issue the new or upgraded Amateur Extra license.

Group E1F - External amplifiers, prohibited uses, and STA

E1F01

Q: On what frequencies are spread spectrum transmissions permitted?

A: Only on amateur frequencies above 222 MHz.

Notes: FCC rules restrict amateur spread spectrum operation to bands above 222 MHz to limit interference and ensure compatibility with existing narrowband services. For the Amateur Extra exam, remember that spread spectrum is only allowed on amateur frequencies higher than 222 MHz.

E1F02

Q: What privileges are authorized in the US to persons holding an amateur service license granted by the government of Canada?

A: The operating terms and conditions of the Canadian amateur service license, not to exceed US Amateur Extra class license privileges.

Notes: Under the reciprocal operating agreement, Canadian amateurs in the US follow the operating terms of their Canadian license, but their maximum privileges are capped at the US Amateur Extra class level. This ensures foreign-licensed operators do not receive operating authority beyond the highest US amateur class while in US territory.

E1F03

Q: Under what circumstances may a dealer sell an external RF power amplifier capable of operation below 144 MHz if it has not been granted FCC certification?

A: The amplifier is constructed or modified by an amateur radio operator for use at an amateur station.

Notes: FCC rules allow the sale of a non-certified external RF power amplifier below 144 MHz only when it is built or modified by a licensed amateur for use at an amateur station. This exception supports legitimate amateur experimentation while still restricting uncertified amplifiers in general commerce.

E1F04

Q: Which of the following geographic descriptions approximately describes "Line A"?

A: A line roughly parallel to and south of the border between the US and Canada.

Notes: In the FCC rules, Line A is a regulatory boundary defined near and south of the US-Canada border. It is used to coordinate certain radio operations and protect stations near that international border region.

E1F05

Q: Amateur stations may not transmit in which of the following frequency segments if they are located in the contiguous 48 states and north of Line A?

A: 420 MHz - 430 MHz.

Notes: The 420 MHz to 430 MHz segment is restricted in this region to protect primary users, so amateur operation there is prohibited. This limitation is part of FCC rules that define where amateurs may legally transmit in the 70-centimeter band near Line A.

E1F06

Q: Under what circumstances might the FCC issue a Special Temporary Authority (STA) to an amateur station?

A: To provide for experimental amateur communications.

Notes: An STA allows the FCC to temporarily authorize operations that support experimentation beyond normal rules. This flexibility supports the Amateur Extra service's role in advancing radio art and technical investigation.

E1F07

Q: When may an amateur station send a message to a business?

A: When neither the amateur nor their employer has a pecuniary interest in the communications.

Notes: FCC rules prohibit amateur radio communications made for pay or other financial benefit, so messages to a business are allowed only when no one involved has a monetary interest in the communication. This preserves the non-commercial nature of the Amateur Radio Service for all license classes, including Amateur Extra.

E1F08

Q: Which of the following types of amateur station communications are prohibited?

A: Communications transmitted for hire or material compensation, except as otherwise provided in the rules.

Notes: FCC regulations prohibit using an amateur station for communications made for payment or other material gain. Limited exceptions exist in the rules, but in general amateur radio is a non-commercial service and must not be used for hire or compensation.

E1F09

Q: Which of the following cannot be transmitted over an amateur radio mesh network?

A: Messages encoded to obscure their meaning.

Notes: FCC rules prohibit using codes or ciphers intended to hide the meaning of messages on amateur radio, including mesh networks. All amateur communications must remain open and understandable to comply with transparency requirements for the Amateur Extra service.

E1F10

Q: Who may be the control operator of an auxiliary station?

A: Only Technician, General, Advanced, or Amateur Extra class operators.

Notes: FCC rules require that the control operator of an auxiliary station hold at least a Technician class license. This ensures that the operator has the necessary privileges and knowledge to properly control unattended or remotely controlled transmitting equipment used in auxiliary operation.

E1F11

Q: Which of the following best describes one of the standards that must be met by an external RF power amplifier if it is to qualify for a grant of FCC certification?

A: It must satisfy the FCC’s spurious emission standards when operated at the lesser of 1500 watts or its full output power.

Notes: FCC certification requires that external RF power amplifiers limit unwanted emissions to protect other spectrum users. Testing at the lesser of 1500 watts or the amplifier’s full output power ensures compliance under maximum normal operating conditions for amateur stations.

SUBELEMENT E2 - Operating and On-Air Procedures

Group E2A - Amateur satellites, orbits, and space operation

E2A01

Q: What is the direction of an ascending pass for an amateur satellite?

A: From south to north.

Notes: An ascending pass is defined as the portion of the satellite's orbit where it moves from the Southern Hemisphere toward the Northern Hemisphere as seen from Earth. For an observer, this corresponds to the satellite traveling generally from south to north across the sky.

E2A02

Q: Which of the following is characteristic of an inverting linear transponder?

A: All these choices are correct:
- Doppler shift is reduced because the uplink and downlink shifts are in opposite directions
- Signal position in the band is reversed
- Upper sideband on the uplink becomes lower sideband on the downlink, and vice versa

Notes: Each listed behavior describes how an inverting linear transponder processes signals in amateur satellite operation. Because it inverts both sideband sense and passband frequency while maintaining linearity, all of the provided statements are simultaneously true.

E2A03

Q: How is an upload signal processed by an inverting linear transponder?

A: The signal is mixed with a local oscillator signal and the difference product is transmitted.

Notes: An inverting linear transponder uses frequency mixing so that the uplink signal is converted to a different frequency by subtracting it from a local oscillator signal. This difference product is then amplified and retransmitted, preserving the modulation while shifting the frequency and inverting the spectrum as used in satellite and similar amateur applications.

E2A04

Q: What is meant by the "mode" of an amateur radio satellite?

A: The satellite's uplink and downlink frequency bands.

Notes: In amateur satellite operation, the mode label tells operators which frequency band is used for transmitting to the satellite (uplink) and which band is used for receiving from it (downlink). This lets operators choose appropriate equipment and frequencies for successful communication through the satellite.

E2A05

Q: What do the letters in a satellite’s mode designator specify?

A: The uplink and downlink frequency ranges.

Notes: Each letter in the satellite mode (such as Mode U/V or L/S) corresponds to a specific amateur band used for the uplink and the downlink. This lets operators know which frequency ranges to use when communicating through that satellite.

E2A06

Q: What are Keplerian elements?

A: Parameters that define the orbit of a satellite.

Notes: In amateur satellite operation, Keplerian elements mathematically describe a satellite's orbit so tracking software can predict its position over time. These orbital parameters are essential for knowing when and where to point antennas and when communication windows will occur.

E2A07

Q: Which of the following types of signals can be relayed through a linear transponder?

A: All these choices are correct:
- FM and CW
- SSB and SSTV
- PSK and packet

Notes: A linear transponder simply translates a range of input frequencies to a different output range, so any mode that occupies bandwidth within that passband can be relayed. This allows multiple analog and digital signal types to be used simultaneously on the same satellite transponder.

E2A08

Q: Why should effective radiated power (ERP) be limited to a satellite that uses a linear transponder?

A: To avoid reducing the downlink power to all other users.

Notes: A linear transponder has a fixed total output power, so if one station transmits with excessive ERP, it forces the transponder to reduce power available to other signals. Limiting ERP helps ensure fair and reliable downlink signals for all users sharing the satellite transponder.

E2A09

Q: What do the terms “L band” and “S band” specify?

A: The 23- and 13-centimeter bands.

Notes: On the Amateur Extra exam, “L band” and “S band” are defined by their corresponding amateur microwave allocations, which are the 23-centimeter and 13-centimeter bands. Knowing these band designations is important for understanding satellite and microwave operating practices and equipment.

E2A10

Q: What type of satellite appears to stay in one position in the sky?

A: Geostationary.

Notes: A geostationary satellite orbits Earth at the equator with the same rotational period as Earth, so it appears motionless in the sky. This fixed apparent position makes it easy for amateur radio operators to point antennas and maintain continuous communication links.

E2A11

Q: What type of antenna can be used to minimize the effects of spin modulation and Faraday rotation?

A: A circularly polarized antenna.

Notes: Circular polarization is less sensitive to changes in signal polarization caused by satellite spin and ionospheric Faraday rotation, so received signal strength varies less. This makes circularly polarized antennas especially useful for satellite and space communication links tested on the Amateur Extra exam.

Group E2B - Fast-scan and slow-scan TV techniques

E2B01

Q: In digital television, what does a coding rate of 3/4 mean?

A: 25% of the data sent is forward error correction data.

Notes: A coding rate of 3/4 indicates that three parts are payload data and one part is error correction, so one quarter (25%) of the transmitted bits are used for forward error correction. This balance improves signal reliability for digital TV while keeping most of the bandwidth available for program content.

E2B02

Q: How many horizontal lines make up a fast-scan (NTSC) television frame?

A: 525.

Notes: In standard analog NTSC television, the video signal format is defined to contain 525 horizontal scan lines per frame. Amateur fast-scan TV uses this same NTSC standard, so each frame consists of 525 lines.

E2B03

Q: How is an interlaced scanning pattern generated in a fast-scan (NTSC) television system?

A: By scanning odd-numbered lines in one field and even-numbered lines in the next.

Notes: NTSC interlaced scanning divides each video frame into two fields, one containing all the odd lines and the other all the even lines. This approach effectively doubles the perceived refresh rate and reduces flicker in the displayed image, which is important for fast-scan amateur television signals.

E2B04

Q: How is color information sent in analog SSTV?

A: Color lines are sent sequentially.

Notes: Analog SSTV encodes each line of the image one after another, including its color components, so the receiving station can reconstruct the full color picture line by line. This sequential transmission of color lines is fundamental to how analog SSTV images are built up over time in amateur radio.

E2B05

Q: Which of the following describes the use of vestigial sideband in analog fast-scan TV transmissions?

A: Vestigial sideband reduces the bandwidth while increasing the fidelity of low frequency video components.

Notes: Vestigial sideband TV transmission partially suppresses one sideband to narrow the occupied spectrum while preserving enough of it to accurately reproduce low-frequency video information. This allows efficient use of bandwidth without degrading important picture detail in the baseband video signal.

E2B06

Q: What is vestigial sideband modulation?

A: Amplitude modulation in which one complete sideband and a portion of the other are transmitted.

Notes: In vestigial sideband, most of one sideband is transmitted along with a reduced portion of the other, conserving bandwidth while maintaining sufficient information for proper demodulation. This technique is commonly used in television transmission and is relevant to understanding advanced amplitude modulation methods on the Amateur Extra exam.

E2B07

Q: Which types of modulation are used for amateur television DVB-T signals?

A: QAM and QPSK.

Notes: Digital Video Broadcasting - Terrestrial (DVB-T) in the amateur service relies on quadrature amplitude modulation (QAM) and quadrature phase shift keying (QPSK) as its primary digital modulation schemes. These modulation types efficiently carry digital video and audio data within the allocated amateur television bandwidth.

E2B08

Q: What technique allows commercial analog TV receivers to be used for fast-scan TV operations on the 70-centimeter band?

A: Transmitting on channels shared with cable TV.

Notes: Cable TV channel frequencies can fall within or near the 70-centimeter amateur band, allowing standard analog TV receivers to display amateur fast-scan TV signals. By using these shared channel frequencies, hams can transmit ATV without requiring specialized receiving equipment beyond a typical analog TV set connected appropriately.

E2B09

Q: What kind of receiver can be used to receive and decode SSTV using the Digital Radio Mondiale (DRM) protocol?

A: SSB.

Notes: DRM-based SSTV signals are transmitted as complex digital waveforms that fit within an SSB channel, so an SSB receiver can properly tune and pass the baseband signal to a computer or decoder. In the Amateur Extra exam context, recognizing that SSB provides the needed bandwidth and fidelity for DRM demodulation is essential.

E2B10

Q: What aspect of an analog slow-scan television signal encodes the brightness of the picture?

A: Tone frequency.

Notes: SSTV transmits video information by varying the audio tone frequency to represent different brightness levels for each point in the image. The receiver decodes these tone frequencies to reconstruct the picture's grayscale or color intensity for the Amateur Extra exam context.

E2B11

Q: What is the function of the vertical interval signaling (VIS) code sent as part of an SSTV transmission?

A: To identify the SSTV mode being used.

Notes: The VIS code tells the receiving equipment which SSTV mode to decode so that the image can be properly reconstructed. This automatic mode identification is essential for correct demodulation and display in Amateur Radio SSTV operation.

E2B12

Q: What signals SSTV receiving software to begin a new picture line?

A: Specific tone frequencies.

Notes: SSTV encodes line timing information as distinct audio tone frequencies, which the receiving software recognizes as the cue to start decoding and displaying a new line of the image. This tone-based timing method keeps transmitting and receiving stations synchronized for proper picture reconstruction.

Group E2C - Contest, DX, remote operation, and logging

E2C01

Q: What indicator is required to be used by US-licensed operators when operating a station via remote control and the remote transmitter is located in the US?

A: No additional indicator is required.

Notes: FCC rules treat a remotely controlled US transmitter as a normal US amateur station for identification purposes. As long as you properly transmit your FCC-issued call sign, no extra suffix or location indicator is needed on the ID when the remote transmitter is in the US.

E2C02

Q: Which of the following file formats is used for exchanging amateur radio log data?

A: ADIF.

Notes: ADIF (Amateur Data Interchange Format) is a standardized format designed specifically for sharing and importing/exporting amateur radio logbook information between different logging and award-tracking software. It allows consistent, structured transfer of contact records in the amateur radio context.

E2C03

Q: From which of the following bands is amateur radio contesting generally excluded?

A: 30 meters.

Notes: The 30-meter band is designated for narrow-band, non-contest operation to reduce interference and support shared use with other services. For this reason, contest activity is not allowed there under standard amateur radio operating practices and rules.

E2C04

Q: Which of the following frequencies can be used for amateur radio mesh networks?

A: Frequencies shared with various unlicensed wireless data services.

Notes: These shared Part 97/Part 15 bands let amateurs legally operate mesh networking equipment that is often based on common unlicensed wireless hardware. This alignment allows hams to adapt off-the-shelf data equipment for amateur radio mesh network use within FCC rules.

E2C05

Q: What is the function of a DX QSL Manager?

A: Handle the receiving and sending of confirmations for a DX station.

Notes: A DX QSL manager centrally manages incoming and outgoing QSL confirmations on behalf of a DX station to ensure contacts are properly confirmed. This simplifies QSL processing for rare or busy DX stations and helps operators confirm contacts for awards and logging accuracy.

E2C06

Q: During a VHF/UHF contest, in which band segment would you expect to find the highest level of SSB or CW activity?

A: In the weak signal segment of the band, with most of the activity near the calling frequency.

Notes: VHF/UHF weak signal segments and their calling frequencies are the standard gathering points for SSB and CW operators, especially during contests. Concentrating activity near the calling frequency makes it easier for stations to find each other and make contacts efficiently under contest conditions.

E2C07

Q: What is the Cabrillo format?

A: A standard for submission of electronic contest logs.

Notes: In amateur radio contesting, Cabrillo defines a uniform text-file structure so that logging software and contest sponsors can reliably process and score electronic log submissions. Using this standard format ensures accurate and efficient handling of contest entries by log-checking systems.

E2C08

Q: Which of the following contacts may be confirmed through the Logbook of The World (LoTW)?

A: All these choices are correct:
- Special event contacts between stations in the US
- Contacts between a US station and a non-US station
- Contacts for Worked All States credit

Notes: LoTW is the ARRL’s official online contact confirmation and awards system and is designed to confirm a wide range of amateur radio QSOs. In the exam context, this means that every contact type listed in the question can be confirmed through LoTW.

E2C09

Q: What type of equipment is commonly used to implement an amateur radio mesh network?

A: A wireless router running custom firmware.

Notes: Custom firmware on a wireless router allows control of frequencies, power levels, and networking features suitable for amateur radio mesh networks. This enables flexible, IP-based communication links that comply with Amateur Extra operating practices.

E2C10

Q: Why do DX stations often transmit and receive on different frequencies?

A: All these choices are correct:
- Because the DX station may be transmitting on a frequency that is prohibited to some responding stations
- To separate the calling stations from the DX station
- To improve operating efficiency by reducing interference

Notes: Splitting transmit and receive frequencies (split operation) helps DX stations manage heavy calling, avoid interference on their transmit frequency, and maintain clearer communication. In the Amateur Extra exam context, all listed reasons together explain why DX stations commonly use split frequency operation.

E2C11

Q: How should you generally identify your station when attempting to contact a DX station during a contest or in a pileup?

A: Send your full call sign once or twice.

Notes: Sending your full call sign once or twice provides clear, complete identification without causing unnecessary congestion in a crowded operating situation. This practice improves efficiency and helps the DX station quickly log and respond to your call, which is especially important under contest and pileup conditions.

E2C12

Q: What indicates the delay between a control operator action and the corresponding change in the transmitted signal?

A: Latency.

Notes: In amateur radio systems, latency is the term used for the time lag between when an operator issues a control input and when the transmitted signal actually reflects that change. This delay is important in evaluating real-time responsiveness of remote or digital control links.

Group E2D - VHF UHF digital, APRS, EME, meteor scatter

E2D01

Q: Which of the following digital modes is designed for meteor scatter communications?

A: MSK144.

Notes: MSK144 was developed to efficiently exchange brief data bursts reflected from ionized meteor trails. Its timing, encoding, and structure are optimized for the short, sporadic openings typical of meteor scatter on VHF bands.

E2D02

Q: What information replaces signal-to-noise ratio when using the FT8 or FT4 modes in a VHF contest?

A: Grid square.

Notes: In VHF contests using FT8 or FT4, the required contest exchange typically uses grid squares to indicate station location instead of reporting signal-to-noise ratio. This allows operators to determine distance and scoring based on Maidenhead grid locators, which is standard in VHF contest operation.

E2D03

Q: Which of the following digital modes is designed for EME communications?

A: Q65.

Notes: Q65 was developed to optimize weak-signal digital communication via the Moon, matching the special timing, Doppler shift, and signal-to-noise challenges of EME paths. For the Amateur Extra exam, remember that Q65 is the dedicated modern digital mode for EME work.

E2D04

Q: What technology is used for real-time tracking of balloons carrying amateur radio transmitters?

A: APRS.

Notes: APRS is a packet-based system that sends position and status data in real time over amateur radio frequencies. This makes it well-suited for tracking moving stations such as high-altitude balloons during Amateur Extra operations.

E2D05

Q: What is the characteristic of the JT65 mode?

A: Decodes signals with a very low signal-to-noise ratio.

Notes: JT65 is specifically designed for weak-signal communication, allowing reliable decoding even when signals are far below the noise floor. This makes it especially useful for long-distance and marginal propagation paths in amateur radio.

E2D06

Q: Which of the following is a method for establishing EME contacts?

A: Time-synchronous transmissions alternating between stations.

Notes: On EME paths, precise timing and alternating transmit/receive periods let very weak signals be decoded despite long delays and fading. Using synchronized time intervals ensures both stations are listening when the other is transmitting, improving the chance of completing a contact.

E2D07

Q: What digital protocol is used by APRS?

A: AX.25.

Notes: APRS (Automatic Packet Reporting System) is built on the AX.25 packet radio protocol, which defines how digital data is formatted and transmitted over amateur radio. Knowing this association helps operators understand how APRS packets are structured and handled on the air.

E2D08

Q: What type of packet frame is used to transmit APRS beacon data?

A: Unnumbered Information.

Notes: In the APRS system, beacon messages are sent as Unnumbered Information frames because they are simple, unacknowledged information packets. This frame type is well suited for periodic position and status reports that do not require connection-oriented delivery.

E2D09

Q: What type of modulation is used by JT65?

A: Multitone AFSK.

Notes: JT65 signals are generated as multiple distinct audio tones that are frequency-shift keyed and then transmitted using the radio’s SSB mode, which makes the modulation type multitone AFSK in the Amateur Extra exam context. This multitone AFSK scheme enables very weak-signal communication with precise, time-synchronized digital encoding and decoding.

E2D10

Q: What does the packet path WIDE3-1 designate?

A: Three digipeater hops are requested with one remaining.

Notes: In APRS and packet routing, a path like WIDE3-1 shows how many digipeater hops were requested and how many are still unused. WIDE3-1 means the packet started with three requested hops and there is one remaining hop that can still be used by a digipeater.

E2D11

Q: How do APRS stations relay data?

A: By packet digipeaters.

Notes: In the Amateur Packet Reporting System (APRS), stations use packet digipeaters to automatically receive, retransmit, and extend the range of position and message data over a wider area. This packet-based relaying method is a standard part of APRS network infrastructure on the amateur bands.

Group E2E - HF digital operating methods and procedures

E2E01

Q: Which of the following types of modulation is used for data emissions below 30 MHz?

A: FSK.

Notes: Frequency Shift Keying (FSK) is a common and efficient digital modulation method used on HF bands for data communications. It is well suited to the propagation characteristics and bandwidth limitations of frequencies below 30 MHz in the amateur radio service.

E2E02

Q: Which of the following synchronizes WSJT-X digital mode transmit/receive timing?

A: Synchronization of computer clocks.

Notes: WSJT-X depends on very accurate time alignment between stations, so each station’s computer clock must be synchronized. This clock synchronization ensures the software starts and stops transmitting and receiving at precisely coordinated times for successful decoding.

E2E03

Q: To what does the "4" in FT4 refer?

A: Four-tone continuous-phase frequency shift keying.

Notes: FT4 is a digital communication mode that encodes data by shifting among four discrete frequency tones in a continuous-phase FSK scheme, which is what the numeral "4" designates. This modulation approach is chosen to provide reliable, machine-decoded communication under typical HF propagation conditions for weak signals.

E2E04

Q: Which of the following is characteristic of the FST4 mode?

A: All these choices are correct:
- Four-tone Gaussian frequency shift keying
- Variable transmit/receive periods
- Seven different tone spacings

Notes: FST4 is engineered as a weak-signal digital mode that combines narrow bandwidth, selectable time periods, and strong error correction to reliably decode signals near the noise floor. These design characteristics make it well suited for difficult paths such as LF/MF, EME, and other low signal-to-noise conditions encountered in Amateur Extra-level operation.

E2E05

Q: Which of these digital modes does not support keyboard-to-keyboard operation?

A: WSPR.

Notes: WSPR is specifically designed for low-power propagation reporting, not for interactive text communication. In the Amateur Extra exam context, it is identified as a beacon-style mode rather than a conversational keyboard-to-keyboard mode.

E2E06

Q: What is the length of an FT8 transmission cycle?

A: 15 seconds.

Notes: FT8 is designed around a fixed 15-second cycle that includes both transmission and reception periods. This timing structure allows multiple synchronized contacts to occur efficiently within each 15-second window on the amateur bands.

E2E07

Q: How does Q65 differ from JT65?

A: Multiple receive cycles are averaged.

Notes: In weak-signal digital modes used on VHF, UHF, and higher bands, Q65 improves decoding sensitivity by averaging data over several receive cycles. This time-averaging enhances the ability to extract very weak signals compared to single-cycle decoding approaches.

E2E08

Q: Which of the following HF digital modes can be used to transfer binary files?

A: PACTOR.

Notes: PACTOR supports reliable, error-corrected data transfer over HF, including the transmission of binary files within its protocol. This makes it suitable for applications like email and file transfer on the amateur HF bands under FCC rules.

E2E09

Q: Which of the following HF digital modes uses variable-length character coding?

A: PSK31.

Notes: PSK31 employs a varicode scheme where more common characters use shorter bit patterns and less common characters use longer ones. This variable-length coding improves efficiency and reduces bandwidth for HF keyboard-to-keyboard communication in the Amateur Extra exam context.

E2E10

Q: Which of these digital modes has the narrowest bandwidth?

A: FT8.

Notes: FT8 uses very short, structured transmissions with tightly controlled tones and timing, resulting in an extremely narrow signal bandwidth. This narrow bandwidth allows FT8 signals to be decoded reliably even under weak-signal and crowded band conditions, which is why it is considered the narrowest among the common digital modes on the exam.

E2E11

Q: What is the difference between direct FSK and audio FSK?

A: Direct FSK modulates the transmitter VFO.

Notes: In direct FSK, the digital signal shifts the frequency of the transmitter's VFO directly to create the two keying tones. This method directly controls the RF carrier frequency instead of generating the shift through audio tones.

E2E12

Q: How do ALE stations establish contact?

A: ALE constantly scans a list of frequencies, activating the radio when the designated call sign is received.

Notes: ALE uses a prearranged frequency list and embedded call signs so stations can find each other and open a link without operator intervention. When a station detects its programmed call sign on one of the scanned frequencies, it automatically responds and establishes the connection, which is the behavior tested on the Amateur Extra exam.

E2E13

Q: Which of these digital modes has the highest data throughput under clear communication conditions?

A: PACTOR IV.

Notes: PACTOR IV uses advanced modulation and coding techniques to maximize data rate when signals are strong and free of interference. In good HF conditions, it can transfer data significantly faster than other typical amateur digital modes, making it the highest-throughput choice on the exam.

SUBELEMENT E3 - Radio Wave Propagation Basics

Group E3A - EME, meteor, tropospheric, and auroral propagation

E3A01

Q: What is the approximate maximum separation measured along the surface of the Earth between two stations communicating by EME?

A: 12,000 miles, if the moon is “visible” by both stations.

Notes: Earth-Moon-Earth (EME) communication requires that both stations have a line of sight to the Moon, which limits their maximum separation along Earth's surface to about 12,000 miles. This distance corresponds to the largest arc on the globe where the Moon can be simultaneously above the horizon for both locations.

E3A02

Q: What characterizes libration fading of an EME signal?

A: A fluttery, irregular fading.

Notes: On Earth-Moon-Earth (EME) paths, small changes in the reflecting surface of the Moon and in the propagation path cause rapid, uneven variations in signal strength. This produces the distinctive fluttery, irregular fading known as libration fading on EME signals.

E3A03

Q: When scheduling EME contacts, which of these conditions will generally result in the least path loss?

A: When the Moon is at perigee.

Notes: Path loss is reduced when the distance between Earth and the Moon is minimized, which happens at perigee. The shorter path reduces free-space loss, improving signal strength for EME communication.

E3A04

Q: In what direction does an electromagnetic wave travel?

A: It travels at a right angle to the electric and magnetic fields.

Notes: In free space, the electric and magnetic fields of an electromagnetic wave are mutually perpendicular and the wave propagates in the third, perpendicular direction. This right-angle relationship among the electric field, magnetic field, and direction of travel is fundamental to understanding radio wave propagation for the Amateur Extra exam.

E3A05

Q: How are the component fields of an electromagnetic wave oriented?

A: They are at right angles.

Notes: In radio waves, the electric and magnetic components are mutually perpendicular, forming a transverse wave. This right-angle relationship is fundamental to how electromagnetic waves propagate in free space and is essential to understanding antenna polarization and radiation patterns.

E3A06

Q: What should be done to continue a long-distance contact when the MUF for that path decreases due to darkness?

A: Switch to a lower frequency HF band.

Notes: As darkness lowers the Maximum Usable Frequency (MUF), higher HF bands may no longer support reliable ionospheric propagation on that path. Moving to a lower frequency HF band keeps the signal below the new MUF, allowing the contact to continue.

E3A07

Q: Atmospheric ducts capable of propagating microwave signals often form over what geographic feature?

A: Large bodies of water.

Notes: Temperature inversions and stable air layers that create atmospheric ducts are commonly found over large bodies of water. These ducts can trap and guide microwave signals, allowing extended propagation ranges useful to amateur radio operators on microwave bands.

E3A08

Q: When a meteor strikes the Earth’s atmosphere, a linear ionized region is formed at what region of the ionosphere?

A: The E region.

Notes: Meteor trails typically ionize the atmosphere at altitudes corresponding to the E region of the ionosphere. This temporary ionized path can reflect VHF radio signals, enabling brief long-distance communication useful in amateur radio meteor-scatter modes.

E3A09

Q: Which of the following frequency ranges is most suited for meteor-scatter communications?

A: 28 MHz - 148 MHz.

Notes: Meteor trails in the ionosphere efficiently reflect radio signals in the VHF and upper HF range, making 28 MHz to 148 MHz particularly effective for meteor-scatter contacts. This range balances good reflection efficiency with manageable path loss and antenna practicality for amateur radio use.

E3A10

Q: What determines the speed of electromagnetic waves through a medium?

A: The index of refraction.

Notes: In radio and wave propagation theory, the index of refraction describes how much a medium slows electromagnetic waves compared to their speed in a vacuum. A higher index of refraction means a lower wave speed in that medium, which directly affects propagation behavior for amateur radio signals.

E3A11

Q: What is a typical range for tropospheric duct propagation of microwave signals?

A: 100 miles to 300 miles.

Notes: Tropospheric ducting traps microwave signals in temperature inversion layers, allowing them to travel well beyond normal line-of-sight distances. Under typical ducting conditions, this extended range is about 100 miles to 300 miles for amateur radio microwave communication.

E3A12

Q: What is most likely to result in auroral propagation?

A: Severe geomagnetic storms.

Notes: Severe geomagnetic storms disturb the Earth's magnetosphere and upper atmosphere, creating auroral ionization that can refract and scatter radio waves. This enhanced ionization along auroral zones enables unique VHF and sometimes HF propagation paths useful to amateur radio operators.

E3A13

Q: Which of these emission modes is best for auroral propagation?

A: CW.

Notes: Auroral propagation distorts and scatters signals, and CW's narrow bandwidth and simple on-off keying make it more likely to be intelligible under these rapid fading and flutter conditions. For this reason, CW is preferred for making reliable contacts via aurora in the Amateur Extra exam context.

E3A14

Q: What are circularly polarized electromagnetic waves?

A: Waves with rotating electric and magnetic fields.

Notes: In circular polarization, the electric and magnetic field vectors rotate in a circular manner as the wave propagates. This rotation defines the polarization type and is important for matching antenna polarization in advanced amateur radio communication links.

Group E3B - Transequatorial, long-path, sporadic-E, and ground wave

E3B01

Q: Where is transequatorial propagation (TEP) most likely to occur?

A: Between points separated by 2,000 miles to 3,000 miles over a path perpendicular to the geomagnetic equator.

Notes: TEP is a VHF propagation mode guided by ionospheric structures aligned with Earth's magnetic field, so paths that are roughly perpendicular to the geomagnetic equator and about 2,000 miles to 3,000 miles long best support it. This distance and orientation match the geometry of the ionization patterns that enable TEP on the Amateur Extra exam bands.

E3B02

Q: What is the approximate maximum range for signals using transequatorial propagation?

A: 5,000 miles.

Notes: Transequatorial propagation supports long-distance HF communication by allowing signals to refract through ionospheric regions near the geomagnetic equator. Under typical conditions, this mode extends reliable communication paths up to about 5,000 miles.

E3B03

Q: At what time of day is transequatorial propagation most likely to occur?

A: Afternoon or early evening.

Notes: Afternoon and early evening are when the ionospheric conditions near the geomagnetic equator most often support transequatorial propagation. During this period, increased ionization enhances signal paths that cross the geomagnetic equator on VHF and higher HF frequencies, making contacts more likely.

E3B04

Q: What are "extraordinary" and "ordinary" waves?

A: Independently propagating, elliptically polarized waves created in the ionosphere.

Notes: The ionosphere splits a radio signal into two separate, elliptically polarized modes that travel independently, known as the ordinary and extraordinary waves. Recognizing these distinct ionospheric modes is important for understanding HF propagation behavior on the Amateur Extra exam.

E3B05

Q: Which of the following paths is most likely to support long-distance propagation on 160 meters?

A: A path entirely in darkness.

Notes: On 160 meters, long-distance communication is favored when both the transmitting and receiving locations, as well as the path between them, are in darkness because ionospheric absorption is lower at night. This allows the low-frequency signals to reflect more efficiently from the ionosphere over greater distances, which is why an all-dark path is preferred for long-haul contacts on this band.

E3B06

Q: On which of the following amateur bands is long-path propagation most frequent?

A: 40 meters and 20 meters.

Notes: The 40-meter and 20-meter bands most often have ionospheric conditions that support signals traveling the long way around the Earth. These bands commonly exhibit stable, long-distance paths that make long-path propagation more likely and more frequent for Amateur Extra operators to observe and use.

E3B07

Q: What effect does lowering a signal’s transmitted elevation angle have on ionospheric HF skip propagation?

A: The distance covered by each hop increases.

Notes: A lower elevation angle sends the signal closer to the horizon, causing it to refract in the ionosphere and return to Earth farther away. This increases the single-hop skip distance on HF bands, which can extend overall communication range.

E3B08

Q: How does the maximum range of ground-wave propagation change when the signal frequency is increased?

A: It decreases.

Notes: Higher-frequency signals are absorbed more rapidly by the ground and lower atmosphere, which limits how far the ground wave can travel. Therefore, as frequency increases, the effective ground-wave coverage range becomes shorter for amateur radio communications.

E3B09

Q: At what time of year is sporadic-E propagation most likely to occur?

A: Around the solstices, especially the summer solstice.

Notes: Sporadic-E propagation peaks near the summer and winter solstices due to seasonal variations in the ionosphere. For HF and VHF operators, this makes the summer solstice period particularly favorable for long-distance Es contacts.

E3B10

Q: What is the effect of chordal-hop propagation?

A: The signal experiences less loss compared to multi-hop propagation, which uses Earth as a reflector.

Notes: In chordal-hop propagation, the signal travels between ionospheric layers without repeatedly reflecting from the Earth, which reduces absorption and scattering losses. This lower loss can result in stronger received signals over long-distance paths compared to conventional multi-hop paths that bounce off the Earth's surface.

E3B11

Q: At what time of day is sporadic-E propagation most likely to occur?

A: Between sunrise and sunset.

Notes: Sporadic-E propagation commonly peaks during daytime heating of the ionosphere, making the period between sunrise and sunset the most favorable time. This behavior is important for predicting VHF propagation conditions on the Amateur Extra exam.

E3B12

Q: What is chordal-hop propagation?

A: Successive ionospheric refractions without an intermediate reflection from the ground.

Notes: In chordal-hop propagation, the radio signal refracts multiple times between ionospheric layers while staying above the Earth's surface, so it never reflects off the ground between hops. This can reduce signal loss compared to paths that include intermediate ground reflections, which is relevant to HF long-distance communication on the Amateur Extra exam.

E3B13

Q: What type of polarization is supported by ground-wave propagation?

A: Vertical.

Notes: Ground waves follow the Earth's surface most effectively when the transmitting and receiving antennas are vertically polarized. This is why vertically polarized antennas are commonly used for low-frequency and medium-frequency ground-wave communication in amateur radio.

Group E3C - Propagation prediction, radio horizon, and space weather

E3C01

Q: What is the cause of short-term radio blackouts?

A: Solar flares.

Notes: Solar flares can suddenly increase X-ray and extreme ultraviolet radiation from the Sun, which rapidly ionizes the Earth’s upper atmosphere and disrupts high-frequency radio propagation. In the Amateur Extra exam context, short-term HF communication outages are attributed to these flare events.

E3C02

Q: What is indicated by a rising A-index or K-index?

A: Increasing disturbance of the geomagnetic field.

Notes: The A-index and K-index are standard measures of geomagnetic activity, so higher values mean the Earth's magnetic field is becoming more disturbed. Such disturbances can adversely affect HF propagation and increase radio communication disruptions, which is why tracking these indices is important to amateur operators.

E3C03

Q: Which of the following signal paths is most likely to experience high levels of absorption when the A-index or K-index is elevated?

A: Through the auroral oval.

Notes: Elevated A and K indices indicate increased geomagnetic and auroral activity, which enhances ionospheric disturbances in the auroral oval. These disturbed regions cause strong signal absorption, especially affecting paths that traverse the auroral zone.

E3C04

Q: What does the value of Bz (B sub z) represent?

A: North-south strength of the interplanetary magnetic field.

Notes: Bz is the component of the interplanetary magnetic field oriented in the north-south direction, which is important in radio propagation because it influences how the solar wind interacts with Earth's magnetosphere. This interaction can significantly affect HF and VHF propagation conditions relevant to amateur radio operation.

E3C05

Q: What orientation of Bz (B sub z) increases the likelihood that charged particles from the Sun will cause disturbed conditions?

A: Southward.

Notes: When the interplanetary magnetic field's Bz component points southward, it more easily couples with Earth's northward-pointing magnetic field. This magnetic reconnection allows more charged solar particles to enter Earth's magnetosphere, increasing geomagnetic disturbance and radio propagation effects.

E3C06

Q: How does the VHF/UHF radio horizon compare to the geographic horizon?

A: It is approximately 15 percent farther.

Notes: Because VHF/UHF signals can slightly follow the curvature of the Earth due to atmospheric refraction, the radio horizon extends about 15 percent beyond the visible (geographic) horizon. This extended range is important for estimating line-of-sight communication distances on these bands.

E3C07

Q: Which of the following indicates the greatest solar flare intensity?

A: Class X.

Notes: Solar flares are categorized by intensity in ascending order of A, B, C, M, and X, with Class X representing the most powerful events. For radio amateurs, Class X flares are most associated with severe HF propagation disturbances and radio blackouts.

E3C08

Q: Which of the following is the space-weather term for an extreme geomagnetic storm?

A: G5.

Notes: Space-weather agencies use the G-scale, from G1 through G5, to classify geomagnetic storm intensity, and G5 denotes the most severe, or extreme, storm level. Knowing this term helps amateur radio operators understand alerts that indicate potential major disruptions to HF propagation and other radio systems.

E3C09

Q: What type of data is reported by amateur radio propagation reporting networks?

A: Digital-mode and CW signals.

Notes: These networks monitor and collect reception reports for digital-mode and CW transmissions to characterize current propagation conditions. By aggregating these reports, operators can see where and how well their signals are being received over time and distance.

E3C10

Q: What does the 304A solar parameter measure?

A: UV emissions at 304 angstroms, correlated to the solar flux index.

Notes: The 304A parameter tracks UV output at a specific wavelength that relates closely to overall solar activity. Because of this correlation, it is useful to amateur radio operators as an indicator of propagation conditions similar to the solar flux index.

E3C11

Q: What does VOACAP software model?

A: HF propagation.

Notes: VOACAP is a prediction tool that calculates how radio signals will propagate on HF bands under given conditions. It helps operators estimate coverage and signal reliability for HF communication paths, which is essential for Amateur Extra exam topics on propagation prediction tools.

E3C12

Q: Which of the following is indicated by a sudden rise in radio background noise across a large portion of the HF spectrum?

A: A coronal mass ejection impact or a solar flare has occurred.

Notes: Large solar events such as coronal mass ejections and solar flares can rapidly increase radio noise levels over wide HF frequency ranges. Recognizing this effect helps operators understand that space weather is affecting HF propagation and communications.

SUBELEMENT E4 - Amateur Station Operating Practices

Group E4A - Test equipment and RF measurement tools

E4A01

Q: Which of the following limits the highest frequency signal that can be accurately displayed on a digital oscilloscope?

A: Sampling rate of the analog-to-digital converter.

Notes: The sampling rate of the analog-to-digital converter determines how many times per second the input signal is measured, which sets the maximum frequency that can be reconstructed without distortion according to the Nyquist criterion. In the Amateur Extra exam context, recognizing that sampling rate governs the usable frequency range of a digital oscilloscope is essential for proper measurement and troubleshooting at higher RF frequencies.

E4A02

Q: Which of the following parameters does a spectrum analyzer display on the vertical and horizontal axes?

A: Signal amplitude and frequency.

Notes: On a spectrum analyzer, the horizontal axis represents the range of frequencies being observed, while the vertical axis shows the amplitude (strength) of signals at those frequencies. This lets an amateur operator see how strong different signals are across the frequency spectrum.

E4A03

Q: Which of the following test instruments is used to display spurious signals and/or intermodulation distortion products generated by an SSB transmitter?

A: Spectrum analyzer.

Notes: A spectrum analyzer shows signal amplitude versus frequency, allowing you to see unwanted spurious outputs and distortion products around the SSB signal. This makes it the appropriate instrument for evaluating the spectral purity of an SSB transmitter.

E4A04

Q: How is compensation of an oscilloscope probe performed?

A: A square wave is displayed, and the probe is adjusted until the horizontal portions of the displayed wave are as nearly flat as possible.

Notes: A properly compensated probe ensures that the oscilloscope’s input and the probe’s capacitance are matched so fast edges of a square wave are displayed accurately. Adjusting for flat, level tops on the square wave confirms the probe is correctly compensated for accurate waveform measurements in amateur radio work.

E4A05

Q: What is the purpose of using a prescaler with a frequency counter?

A: Reduce the signal frequency to within the counter's operating range.

Notes: Many frequency counters cannot directly measure very high RF frequencies, so a prescaler divides the input signal down to a lower frequency they can handle. This allows accurate measurement of high-frequency signals used in Amateur Extra class operations.

E4A06

Q: What is the effect of aliasing on a digital oscilloscope when displaying a waveform?

A: A false, jittery low-frequency version of the waveform is displayed.

Notes: When the sampling rate of a digital oscilloscope is too low relative to the signal frequency, higher-frequency components fold back into lower frequencies, creating a misleading low-frequency display. This effect is seen as a jittery, incorrect representation of the actual waveform, which is important to recognize in precise Amateur Extra-class measurements.

E4A07

Q: Which of the following is an advantage of using an antenna analyzer compared to an SWR bridge?

A: Antenna analyzers compute SWR and impedance automatically.

Notes: An antenna analyzer measures and then directly displays both SWR and complex impedance, simplifying antenna tuning. This automatic computation saves time and reduces calculation errors during station setup and adjustment for the Amateur Extra exam context.

E4A08

Q: Which of the following is used to measure SWR?

A: All these choices are correct:
- Directional wattmeter
- Vector network analyzer
- Antenna analyzer

Notes: These instruments are all designed to evaluate how efficiently RF power is transferred from a transmitter to a load by indicating the SWR on a transmission line. In the Amateur Extra exam context, recognizing that multiple common station instruments can measure SWR is essential for proper station setup and troubleshooting.

E4A09

Q: Which of the following is good practice when using an oscilloscope probe?

A: Minimize the length of the probe's ground connection.

Notes: A short ground lead reduces inductance and loop area, which minimizes signal distortion and noise pickup. This is especially important in RF and high-frequency measurements for accurate waveform observation on the oscilloscope.

E4A10

Q: Which trigger mode is most effective when using an oscilloscope to measure a linear power supply’s output ripple?

A: Line.

Notes: Line trigger mode locks the oscilloscope’s trigger to the AC mains frequency that drives the linear power supply, stabilizing the display of ripple that is synchronized to that line frequency. This makes the ripple waveform easier to view and measure accurately on the screen.

E4A11

Q: Which of the following can be measured with an antenna analyzer?

A: All these choices are correct:
- Velocity factor
- Cable length
- Resonant frequency of a tuned circuit

Notes: Modern antenna analyzers are designed to display several key parameters of an antenna system, including SWR, impedance, and resonance. Because it provides all of these related measurements, all of the listed functions are correctly performed by an antenna analyzer in Amateur Extra exam context.

Group E4B - Measurement techniques, accuracy, and calibration

E4B01

Q: Which of the following factors most affects the accuracy of a frequency counter?

A: Time base accuracy.

Notes: A frequency counter measures frequency by counting cycles against a precise time reference, so any error in the internal time base directly causes a proportional error in the measured frequency. For high-accuracy measurements in Amateur Extra work, a stable and accurate time base (often from a high-quality crystal or GPS reference) is essential.

E4B02

Q: What is the significance of voltmeter sensitivity expressed in ohms per volt?

A: The full scale reading of the voltmeter multiplied by its ohms per volt rating is the input impedance of the voltmeter.

Notes: Ohms per volt tells how much resistance the meter presents per volt of full-scale range, so multiplying this rating by the selected full-scale voltage gives the total input impedance. In radio work, knowing this impedance is important to avoid loading the circuit being measured.

E4B03

Q: Which S parameter is equivalent to forward gain?

A: S21.

Notes: In S-parameter notation, S21 represents the transmission from port 1 to port 2, which corresponds to the forward gain of a two-port RF network. This is the parameter used to describe how much of the input signal at the input port appears at the output port in the forward direction in amateur radio equipment and RF design.

E4B04

Q: Which S parameter represents input port return loss or reflection coefficient (equivalent to VSWR)?

A: S11.

Notes: S11 describes how much of a signal applied to the input port is reflected back, which directly relates to return loss, reflection coefficient, and VSWR. In RF design and measurement, S11 is used to evaluate how well the input of a device is impedance matched to the source or transmission line.

E4B05

Q: What three test loads are used to calibrate an RF vector network analyzer?

A: Short circuit, open circuit, and 50 ohms.

Notes: These three standards (short, open, and 50-ohm load) provide known reference conditions that allow the vector network analyzer to accurately correct its measurements. They establish a calibration baseline for reflection and impedance measurements in typical 50-ohm amateur radio systems.

E4B06

Q: How much power is being absorbed by the load when a directional power meter connected between a transmitter and a terminating load reads 100 watts forward power and 25 watts reflected power?

A: 75 watts.

Notes: The power actually delivered to the load is the forward power minus the reflected power. Subtracting 25 watts from 100 watts gives 75 watts absorbed by the load in this transmission line setup.

E4B07

Q: What do the subscripts of S parameters represent?

A: The port or ports at which measurements are made.

Notes: In RF network analysis, S-parameters describe how signals behave at different ports of a device, and the subscripts identify which input and output ports are involved in the measurement. This is important in amateur radio when analyzing multi-port components such as amplifiers, filters, and duplexers using network analyzers.

E4B08

Q: Which of the following can be used to determine the Q of a series-tuned circuit?

A: The bandwidth of the circuit's frequency response.

Notes: For a resonant circuit, Q is defined in terms of its center frequency and the bandwidth between the half-power points of its frequency response. Measuring that bandwidth allows calculation of Q for exam and design purposes.

E4B09

Q: Which of the following can be measured by a two-port vector network analyzer?

A: Filter frequency response.

Notes: A two-port vector network analyzer measures how signals of different frequencies are transmitted and reflected through a device, which directly characterizes a filter's frequency response. This allows amateurs to evaluate how well a filter passes desired frequencies and attenuates unwanted ones for proper station performance.

E4B10

Q: Which of the following methods measures intermodulation distortion in an SSB transmitter?

A: Modulate the transmitter using two AF signals having non-harmonically related frequencies and observe the RF output with a spectrum analyzer.

Notes: Using two non-harmonically related audio tones causes intermodulation products to appear at predictable spacings in the RF output spectrum. A spectrum analyzer makes these products visible so their levels can be measured relative to the desired signals for SSB transmitter performance evaluation.

E4B11

Q: Which of the following can be measured with a vector network analyzer?

A: All these choices are correct:
- Input impedance
- Output impedance
- Reflection coefficient

Notes: A vector network analyzer characterizes RF components by measuring how signals are transmitted and reflected, including both magnitude and phase. This allows accurate determination of impedance and loss-related parameters needed for Amateur Extra-level design and troubleshooting.

Group E4C - Receiver noise, sensitivity, and dynamic range

E4C01

Q: What is an effect of excessive phase noise in an SDR receiver's master clock oscillator?

A: It can combine with strong signals on nearby frequencies to generate interference.

Notes: In an SDR receiver, excessive phase noise spreads the energy of nearby strong signals, causing them to mix and produce interference products. This degrades receiver performance by raising the noise floor and masking weaker signals on or near the desired frequency.

E4C02

Q: Which of the following receiver circuits can be effective in eliminating interference from strong out-of-band signals?

A: A front-end filter or preselector.

Notes: Strong signals outside the desired band can overload the receiver front end, causing distortion and intermodulation. A front-end filter or preselector limits the receiver input to the desired frequency range, reducing the impact of strong out-of-band signals.

E4C03

Q: What is the term for the suppression in an FM receiver of one signal by another stronger signal on the same frequency?

A: Capture effect.

Notes: FM receivers tend to lock onto and demodulate the stronger of two signals on the same frequency, effectively suppressing the weaker one. This phenomenon is known in radio communications as the capture effect and is a characteristic behavior of FM detection circuits.

E4C04

Q: What is the noise figure of a receiver?

A: The ratio in dB of the noise generated by the receiver to the theoretical minimum noise.

Notes: Noise figure quantifies how much additional noise a receiver adds compared to an ideal, noise-free system at the same temperature and bandwidth. In amateur radio, a lower noise figure means the receiver can detect weaker signals more effectively above the theoretical noise floor.

E4C05

Q: What does a receiver noise floor of -174 dBm represent?

A: The theoretical noise in a 1 Hz bandwidth at the input of a perfect receiver at room temperature.

Notes: -174 dBm in 1 Hz bandwidth is the fundamental thermal noise limit set by physics for a receiver at room temperature. It provides a reference point for comparing real receiver noise performance in amateur radio systems.

E4C06

Q: How much does increasing a receiver's bandwidth from 50 Hz to 1,000 Hz increase the receiver's noise floor?

A: 13 dB.

Notes: Receiver noise power is proportional to bandwidth, so increasing the bandwidth from 50 Hz to 1,000 Hz significantly increases the integrated noise. This bandwidth ratio corresponds to a 13 dB increase in the noise floor, which reduces the system's ability to copy weak signals.

E4C07

Q: What does the MDS of a receiver represent?

A: The minimum discernible signal.

Notes: In amateur radio receiver specifications, minimum discernible signal (MDS) is the smallest signal level that can be detected above the receiver's noise floor. It is a key sensitivity measure that indicates how weak a signal the receiver can reliably hear under standard conditions.

E4C08

Q: An SDR receiver is overloaded when input signals exceed what level?

A: The reference voltage of the analog-to-digital converter.

Notes: In an SDR, the analog-to-digital converter (ADC) sets the maximum signal level it can accurately digitize. When the input exceeds the ADC reference voltage, the signal clips and causes overload distortion in the received signal.

E4C09

Q: Which of the following choices is a good reason for selecting a high IF for a superheterodyne HF or VHF communications receiver?

A: Easier for front-end circuitry to eliminate image responses.

Notes: Using a higher IF places image frequencies farther away from the desired signal, making them easier to reject with practical RF filtering at the receiver front end. This improves receiver performance by reducing unwanted signals that could otherwise mix into the passband.

E4C10

Q: What is an advantage of having a variety of receiver bandwidths from which to select?

A: Receive bandwidth can be set to match the modulation bandwidth, maximizing signal-to-noise ratio and minimizing interference.

Notes: When the receiver bandwidth closely matches the signal's modulation bandwidth, less noise and unwanted signals are admitted, improving intelligibility. This is important in amateur radio to optimize reception under varying band conditions and signal types.

E4C11

Q: Why does input attenuation reduce receiver overload on the lower frequency HF bands with little or no impact on signal-to-noise ratio?

A: Atmospheric noise is generally greater than internally generated noise even after attenuation.

Notes: On the lower HF bands, the dominant noise source is atmospheric noise, not the receiver's own internal noise. Adding attenuation lowers both the signal and the strong incoming noise, but since atmospheric noise still remains stronger than the receiver noise, the signal-to-noise ratio is essentially unchanged while overload is reduced.

E4C12

Q: How does a narrow-band roofing filter affect receiver performance?

A: It improves blocking dynamic range by attenuating strong signals near the receive frequency.

Notes: By sharply limiting the bandwidth early in the receiver, a narrow-band roofing filter reduces the energy from strong nearby signals that could otherwise overload later stages. This improves the receiver's ability to handle strong adjacent signals without degrading reception of the desired signal, which is described as better blocking dynamic range in the Amateur Extra exam context.

E4C13

Q: What is reciprocal mixing?

A: Local oscillator phase noise mixing with adjacent strong signals to create interference to desired signals.

Notes: In a receiver, phase noise from the local oscillator can mix with nearby strong signals and produce noise in the passband of the desired weak signal. This degrades the effective sensitivity and dynamic range of the receiver, which is described as reciprocal mixing in the Amateur Extra exam context.

E4C14

Q: What is the purpose of the receiver IF Shift control?

A: To reduce interference from stations transmitting on adjacent frequencies.

Notes: By shifting the intermediate frequency passband, the IF Shift control moves interfering signals from nearby frequencies outside the receiver’s most sensitive passband. This helps the operator better copy the desired signal when strong adjacent-channel signals are present.

Group E4D - Receiver linearity, interference, and link margin

E4D01

Q: What is meant by the blocking dynamic range of a receiver?

A: The difference in dB between the noise floor and the level of an incoming signal that will cause 1 dB of gain compression.

Notes: Blocking dynamic range describes how strong a nearby signal can be before it starts to compress the receiver's gain by 1 dB. In Amateur Extra exam context, this measures how well a receiver can handle strong signals without degrading the ability to copy weaker signals near the noise floor.

E4D02

Q: Which of the following describes problems caused by poor dynamic range in a receiver?

A: Spurious signals caused by cross modulation and desensitization from strong adjacent signals.

Notes: Dynamic range defines how well a receiver can handle both weak and strong signals at the same time. When dynamic range is poor, strong nearby signals overload the receiver front end, creating spurious signals and reducing sensitivity to weaker signals (desensitization).

E4D03

Q: What creates intermodulation interference between two repeaters in close proximity?

A: The output signals mix in the final amplifier of one or both transmitters.

Notes: When strong RF signals from nearby repeaters are present at a transmitter's final amplifier, they can mix nonlinearly and generate new, unwanted intermodulation products. These products can fall on other frequencies and cause interference, which is why close-proximity repeaters must be carefully engineered to avoid this condition.

E4D06

Q: What is the term for the reduction in receiver sensitivity caused by a strong signal near the received frequency?

A: Desensitization.

Notes: A strong nearby signal can partially overload the receiver front end, effectively reducing its ability to detect weaker signals on or near the desired frequency. This loss of effective sensitivity is called desensitization in amateur radio receiver design and operation.

E4D07

Q: Which of the following reduces the likelihood of receiver desensitization?

A: Insert attenuation before the first RF stage.

Notes: Adding attenuation ahead of the first RF amplifier reduces very strong incoming signals to a manageable level, preventing the receiver front end from overloading. This keeps the receiver more linear and preserves sensitivity to weaker signals in crowded Amateur Extra band conditions.

E4D08

Q: What causes intermodulation in an electronic circuit?

A: Nonlinear circuits or devices.

Notes: When a circuit or device is nonlinear, it mixes two or more signals to produce additional signals at sum and difference frequencies of the originals. These new, unwanted frequencies are called intermodulation products and can cause interference in amateur radio systems.

E4D09

Q: What is the purpose of the preselector in a communications receiver?

A: To increase the rejection of signals outside the band being received.

Notes: A preselector is a tunable filter placed ahead of the receiver's front end that passes only the desired frequency range. By rejecting out-of-band signals, it reduces overload and interference, improving reception of the intended amateur band signals.

E4D10

Q: What does a third-order intercept level of 40 dBm mean with respect to receiver performance?

A: A pair of 40 dBm input signals will theoretically generate a third-order intermodulation product that has the same output amplitude as either of the input signals.

Notes: The third-order intercept point is a theoretical measure of how strong signals can be before third-order intermodulation products reach the same level as the desired signals. A 40 dBm intercept level indicates the receiver can better tolerate strong nearby signals before intermodulation distortion becomes significant, which is important for crowded amateur bands.

E4D11

Q: Why are odd-order intermodulation products, created within a receiver, of particular interest compared to other products?

A: Odd-order products of two signals in the band being received are also likely to be within the band.

Notes: In the Extra exam context, odd-order intermodulation products can fall inside the same band as the desired signals, where they directly interfere with reception. This makes them more problematic than products that fall outside the tuned band and are more easily filtered out.

E4D12

Q: What is the link margin in a system with a transmit power level of 10 W (+40 dBm), a system antenna gain of 10 dBi, a cable loss of 3 dB, a path loss of 136 dB, a receiver minimum discernable signal of -103 dBm, and a required signal-to-noise ratio of 6 dB?

A: +8dB.

Notes: The received signal level is found by adding transmitter power and antenna gain, then subtracting cable and path losses, and the link margin is the amount by which this received level exceeds the receiver sensitivity plus the required signal-to-noise ratio. In this case the calculation yields a link margin of +8 dB, indicating the signal is 8 dB stronger than the minimum required for adequate reception.

E4D13

Q: What is the received signal level with a transmit power of 10 W (+40 dBm), a transmit antenna gain of 6 dBi, a receive antenna gain of 3 dBi, and a path loss of 100 dB?

A: -51 dBm.

Notes: In link budget calculations, you add the transmit power (in dBm) and both antenna gains (in dBi), then subtract the path loss (in dB), giving +40 dBm + 6 dBi + 3 dBi – 100 dB = -51 dBm. This result represents the expected received signal level under those specified path and antenna conditions.

E4D14

Q: What power level does a receiver minimum discernible signal of -100 dBm represent?

A: 0.1 picowatts.

Notes: In RF engineering, dBm is a logarithmic measure of power referenced to 1 milliwatt, and -100 dBm converts mathematically to 0.1 picowatts. This very low power level illustrates the extreme sensitivity required of receivers in weak-signal Amateur Extra class operation scenarios.

Group E4E - Noise sources, interference, and station grounding

E4E01

Q: What problem can occur when using an automatic notch filter (ANF) to remove interfering carriers while receiving CW signals?

A: Removal of the CW signal as well as the interfering carrier.

Notes: An automatic notch filter analyzes and suppresses steady tones, so it can mistakenly identify a CW signal as interference. This causes the desired CW signal to be notched out along with the unwanted carrier, degrading or eliminating reception of the intended transmission.

E4E02

Q: Which of the following types of noise can often be reduced by a digital noise reduction?

A: All these choices are correct:
- Broadband white noise
- Ignition noise
- Power line noise

Notes: In the Amateur Extra exam context, digital noise reduction (DNR) in modern receivers is designed to analyze and suppress a wide range of repetitive or structured noise sources, including locally generated noise, ignition noise, and power line noise. This makes digital noise reduction broadly effective for improving intelligibility in the presence of these common noise types.

E4E04

Q: How can conducted noise from an automobile battery charging system be suppressed?

A: By installing ferrite chokes on the charging system leads.

Notes: Ferrite chokes increase the impedance to high-frequency noise currents on the charging leads while allowing DC charging current to pass normally. This reduces conducted interference from the vehicle’s electrical system from reaching amateur radio equipment.

E4E05

Q: What is used to suppress radio frequency interference from a line-driven AC motor?

A: A brute-force AC-line filter in series with the motor’s power leads.

Notes: A brute-force AC-line filter placed in series with the motor’s power leads attenuates RF noise generated by the motor before it can travel on the AC line. This reduces interference that could affect nearby amateur radio equipment and receivers.

E4E06

Q: What type of electrical interference can be caused by computer network equipment?

A: The appearance of unstable modulated or unmodulated signals at specific frequencies.

Notes: Digital circuitry and clock signals in computer network equipment can radiate or conduct RF energy that shows up on a receiver as unstable signals on particular frequencies. This description matches the typical interference pattern hams may observe when network hardware is operating near amateur bands.

E4E07

Q: Which of the following can cause shielded cables to radiate or receive interference?

A: Common-mode currents on the shield and conductors.

Notes: In amateur radio systems, common-mode currents make the entire shielded cable act like an unintended antenna, allowing it to both radiate and pick up RF energy. Proper bonding, grounding, and use of chokes help suppress these currents and reduce interference problems.

E4E08

Q: What current flows equally on all conductors of an unshielded multiconductor cable?

A: Common-mode current.

Notes: In amateur radio systems, common-mode current appears when all conductors in a cable carry the same RF current in the same direction with respect to some reference, such as ground. Recognizing common-mode current is important because it can cause unwanted RF radiation, interference, and coupling issues in station wiring and feedlines.

E4E09

Q: What undesirable effect can occur when using a noise blanker?

A: Strong signals may be distorted and appear to cause spurious emissions.

Notes: A noise blanker works by momentarily blanking or muting the receiver to remove impulsive noise, which can also clip or distort strong desired signals. This distortion can make those strong signals look like they are generating spurious emissions on nearby frequencies in the receiver.

E4E10

Q: Which of the following can create intermittent loud roaring or buzzing AC line interference?

A: All these choices are correct:
- Arcing contacts in a thermostatically controlled device
- A defective doorbell or doorbell transformer inside a nearby residence
- A malfunctioning illuminated advertising display

Notes: Multiple common AC-powered sources, such as faulty power line hardware, bad connections, and malfunctioning appliances, can each produce intermittent loud roaring or buzzing interference. Because all listed items are realistic AC line noise sources in amateur radio practice, all these choices are correct.

E4E11

Q: What could be the cause of local AM broadcast band signals combining to generate spurious signals on the MF or HF bands?

A: Nearby corroded metal connections are mixing and reradiating the broadcast signals.

Notes: Corroded metal junctions can behave like unintended nonlinear devices, mixing strong AM broadcast signals and creating new, unwanted frequencies. These mixed products are then reradiated and can appear as spurious signals on MF or HF amateur bands, affecting reception and causing interference issues relevant to the Amateur Extra exam.

E4E12

Q: What causes interference received as a series of carriers at regular intervals across a wide frequency range?

A: Switch-mode power supplies.

Notes: Switch-mode power supplies operate by rapidly switching current on and off, generating harmonics and spurious signals at regular frequency intervals. These switching products can extend across a wide range of frequencies and appear as evenly spaced carriers on an amateur radio receiver.

E4E13

Q: Where should a station AC surge protector be installed?

A: On the single point ground panel.

Notes: Mounting the AC surge protector on the single point ground panel ensures that surge currents are directed into a common grounding system, minimizing potential differences and damage to equipment. This configuration supports proper station grounding and lightning protection practices expected for the Amateur Extra exam.

E4E14

Q: What is the purpose of a single point ground panel?

A: Ensure all lightning protectors activate at the same time.

Notes: By bonding all lightning protectors to a single ground reference, a single point ground panel causes them to respond simultaneously to a surge. This coordinated operation helps protect amateur radio equipment from lightning-induced voltage differences between separate grounds.

SUBELEMENT E5 - Core Electrical Principles

Group E5A - Resonance, Q, and bandwidth behavior

E5A01

Q: What can cause the voltage across reactances in a series RLC circuit to be higher than the voltage applied to the entire circuit?

A: Resonance.

Notes: At resonance in a series RLC circuit, the inductive and capacitive reactances are equal in magnitude and cause large circulating currents, which produce higher voltages across the inductor and capacitor than the total applied voltage. This is known as voltage magnification at resonance and is an important effect in RF circuit design and analysis for the Amateur Extra exam.

E5A02

Q: What is the resonant frequency of an RLC circuit if R is 22 ohms, L is 50 microhenries, and C is 40 picofarads?

A: 3.56 MHz.

Notes: For an RLC circuit, the resonant frequency is determined by the inductance and capacitance using the formula $f = 1 / (2\pi\sqrt{(LC)})$. Substituting L = 50 microhenries and C = 40 picofarads into this formula yields approximately 3.56 MHz.

E5A03

Q: What is the magnitude of the impedance of a series RLC circuit at resonance?

A: Approximately equal to circuit resistance.

Notes: In a series RLC circuit at resonance, the inductive and capacitive reactances are equal in magnitude and cancel each other, leaving only the resistive component. Therefore, the circuit's impedance magnitude is approximately the same as its resistance.

E5A04

Q: What is the magnitude of the impedance of a parallel RLC circuit at resonance?

A: Approximately equal to circuit resistance.

Notes: At resonance in a parallel RLC circuit, the inductive and capacitive reactances cancel each other, leaving the impedance determined primarily by the resistance. Therefore, the total impedance magnitude at resonance closely matches the circuit resistance value.

E5A05

Q: What is the result of increasing the Q of an impedance-matching circuit?

A: Matching bandwidth is decreased.

Notes: In an RF impedance-matching circuit, a higher Q means a narrower resonance curve, so the circuit effectively matches impedances over a smaller range of frequencies. This reduced bandwidth is a key tradeoff when designing high-Q matching networks for amateur radio applications.

E5A06

Q: What is the magnitude of the circulating current within the components of a parallel LC circuit at resonance?

A: It is at a maximum.

Notes: At resonance in a parallel LC circuit, equal and opposite reactive currents flow between the inductor and capacitor, creating the largest possible circulating current. This high internal current occurs even though the net current from the source is minimal at resonance.

E5A07

Q: What is the magnitude of the current at the input of a parallel RLC circuit at resonance?

A: Minimum.

Notes: At resonance in a parallel RLC circuit, the reactive currents in the inductor and capacitor cancel each other, so the source only supplies the small resistive current. This results in the minimum input current at resonance for a parallel RLC configuration.

E5A08

Q: What is the phase relationship between the current through and the voltage across a series resonant circuit at resonance?

A: The voltage and current are in phase.

Notes: At series resonance, the inductive and capacitive reactances cancel, leaving a purely resistive impedance, so the current and voltage align in phase. This in-phase condition is a key indicator of resonance in a series RLC circuit used in Amateur Extra exam problems.

E5A09

Q: How is the Q of an RLC parallel resonant circuit calculated?

A: Resistance divided by the reactance of either the inductance or capacitance.

Notes: In a parallel resonant circuit, Q is defined by the ratio of resistance to reactive impedance at resonance. Using the reactance of either the inductor or capacitor gives the same Q value because their reactances are equal in magnitude at resonance.

E5A10

Q: What is the resonant frequency of an RLC circuit if R is 33 ohms, L is 50 microhenries, and C is 10 picofarads?

A: 7.12 MHz.

Notes: Resonant frequency in an RLC circuit is determined by the inductor and capacitor values using the formula $f_r = 1 / (2\pi\sqrt{(LC)})$. Substituting L = 50 microhenries and C = 10 picofarads into this formula yields approximately 7.12 MHz.

E5A11

Q: What is the half-power bandwidth of a resonant circuit that has a resonant frequency of 7.1 MHz and a Q of 150?

A: 47.3 kHz.

Notes: For a resonant circuit, the half-power bandwidth is found by dividing the resonant frequency by the Q, so 7.1 MHz ÷ 150 = 47.3 kHz. This relationship is commonly used in amateur radio to relate selectivity (bandwidth) to Q at a given operating frequency.

E5A12

Q: What is the half-power bandwidth of a resonant circuit that has a resonant frequency of 3.7 MHz and a Q of 118?

A: 31.4 kHz.

Notes: For resonant circuits, the half-power bandwidth equals the resonant frequency divided by the quality factor, so 3.7 MHz ÷ 118 ≈ 31.4 kHz. This relationship between Q, resonant frequency, and bandwidth is fundamental in Extra-class filter and resonance problems.

E5A13

Q: What is an effect of increasing Q in a series resonant circuit?

A: Internal voltages increase.

Notes: At series resonance, higher Q indicates lower losses and higher circulating currents in the reactive components, which increases the voltages developed across them. This effect is important in high-Q resonant circuits because internal voltages can become much larger than the applied source voltage.

Group E5B - Time constants, reactance, phase, and admittance

E5B01

Q: What is the term for the time required for the capacitor in an RC circuit to be charged to 63.2% of the applied voltage or to discharge to 36.8% of its initial voltage?

A: One time constant.

Notes: In an RC circuit, the time constant is a standard measure of how quickly the voltage across a capacitor changes, defined by these specific charge and discharge percentages. This concept is widely used in analyzing timing, filtering, and transient behavior in radio and electronic circuits.

E5B02

Q: What letter is commonly used to represent susceptance?

A: B.

Notes: In the context of complex impedance and admittance, susceptance is the imaginary component of admittance and is conventionally denoted by the letter B in circuit equations and diagrams. This standard notation is used throughout electronics and amateur radio theory.

E5B03

Q: How is impedance in polar form converted to an equivalent admittance?

A: Take the reciprocal of the magnitude and change the sign of the angle.

Notes: Admittance is the reciprocal of impedance, so in polar form you invert the magnitude and reverse the angle. This directly yields the equivalent admittance from the given impedance for circuit analysis on the Amateur Extra exam.

E5B04

Q: What is the time constant of a circuit having two 220-microfarad capacitors and two 1-megohm resistors, all in parallel?

A: 220 seconds.

Notes: In a parallel circuit, the capacitances add to give 440 microfarads and the resistances combine to give 0.5 megohms, so the time constant $\tau = R \times C = 0.5 \times 10^6$ ohms $\times 440 \times 10^{-6}$ farads = 220 seconds. This time constant describes how quickly voltage in the RC circuit charges or discharges toward its final value.

E5B05

Q: What is the effect on the magnitude of pure reactance when it is converted to susceptance?

A: It is replaced by its reciprocal.

Notes: Susceptance is the reciprocal of reactance in AC circuit analysis, so converting from reactance to susceptance inverts the magnitude. This relationship is fundamental when switching between impedance and admittance representations in the Amateur Extra exam context.

E5B06

Q: What is susceptance?

A: The imaginary part of admittance.

Notes: In AC circuit analysis, admittance is a complex quantity with a real part (conductance) and an imaginary part (susceptance), analogous to how impedance has resistance and reactance components. Susceptance therefore represents the reactive portion of how easily a circuit allows AC to flow, making it the imaginary part of admittance.

E5B07

Q: What is the phase angle between the voltage across and the current through a series RLC circuit if XC is 500 ohms, R is 1 kilohm, and XL is 250 ohms?

A: 14.0 degrees with the voltage lagging the current.

Notes: The net reactance is the difference between inductive and capacitive reactance, and the phase angle is determined by the arctangent of the net reactance divided by the resistance. A net capacitive reactance causes the voltage to lag the current by 14.0 degrees in this case.

E5B08

Q: What is the phase angle between the voltage across and the current through a series RLC circuit if XC is 300 ohms, R is 100 ohms, and XL is 100 ohms?

A: 63 degrees with the voltage lagging the current.

Notes: The net reactance is found from XL – XC, which is negative in this case, indicating a capacitive circuit where current leads voltage. Using the ratio of reactance to resistance gives a phase angle of 63 degrees, with the voltage lagging the current.

E5B09

Q: What is the relationship between the AC current through a capacitor and the voltage across a capacitor?

A: Current leads voltage by 90 degrees.

Notes: In AC circuits, a capacitor's current responds immediately to changes in voltage, causing the current waveform to reach its peaks a quarter cycle (90 degrees) before the voltage waveform. This 90-degree lead is a fundamental phase relationship used in analyzing reactive components on the Amateur Extra exam.

E5B10

Q: What is the relationship between the AC current through an inductor and the voltage across an inductor?

A: Voltage leads current by 90 degrees.

Notes: Inductive reactance causes the induced voltage to reach its maximum value one-quarter cycle (90 degrees) before the current. This phase relationship is fundamental to analyzing AC circuits that include inductors in the Amateur Extra exam.

E5B11

Q: What is the phase angle between the voltage across and the current through a series RLC circuit if XC is 25 ohms, R is 100 ohms, and XL is 75 ohms?

A: 27 degrees with the voltage leading the current.

Notes: The net reactance is XL - XC = 75 ohms - 25 ohms = 50 ohms, which is inductive, so the voltage leads the current. The phase angle is arctangent of the reactance divided by the resistance, arctan(50 / 100) ≈ 27 degrees, giving 27 degrees with the voltage leading the current.

E5B12

Q: What is admittance?

A: The inverse of impedance.

Notes: In AC circuit analysis, admittance quantifies how easily current flows and is defined mathematically as the reciprocal of impedance. This relationship is fundamental when analyzing complex RF networks and matching circuits in amateur radio systems.

Group E5C - Rectangular, polar, and phasor representations

E5C01

Q: Which of the following represents pure capacitive reactance of 100 ohms in rectangular notation?

A: 0 - j100.

Notes: In rectangular form, a purely reactive impedance has zero real part and an imaginary part equal to the reactance, which is negative for a capacitor. Therefore, a 100-ohm capacitive reactance is written as 0 - j100.

E5C02

Q: How are impedances described in polar coordinates?

A: By magnitude and phase angle.

Notes: In AC circuit analysis for amateur radio, impedance is often expressed in polar form so that its size (magnitude) and timing shift of the waveform (phase angle) are clear. This format makes it easier to analyze and combine impedances using phasor methods on the Extra exam.

E5C03

Q: Which of the following represents a pure inductive reactance in polar coordinates?

A: A positive 90 degree phase angle.

Notes: Inductive reactance causes the current to lag the voltage by 90 degrees, which is represented as a +90 degree phase angle in polar form. In AC circuit analysis for the Extra exam, this positive quadrature relationship identifies a purely inductive reactance.

E5C04

Q: What type of Y-axis scale is most often used for graphs of circuit frequency response?

A: Logarithmic.

Notes: A logarithmic Y-axis matches how voltage gain, power gain, and attenuation are commonly expressed in decibels, making circuit frequency response easier to interpret over wide dynamic ranges. This scale allows small and large changes in response to be seen clearly on a single graph.

E5C05

Q: What kind of diagram is used to show the phase relationship between impedances at a given frequency?

A: Phasor diagram.

Notes: In AC circuit and impedance analysis, phasor diagrams graphically represent sinusoidal voltages and currents as rotating vectors, making their relative phase angles clear. This helps amateur radio operators visualize how different impedances interact at a specific operating frequency.

E5C06

Q: What does the impedance 50 - j25 ohms represent?

A: 50 ohms resistance in series with 25 ohms capacitive reactance.

Notes: In rectangular form, the real part of an impedance is the resistance and the negative imaginary part is the capacitive reactance, so 50 - j25 ohms describes 50 ohms resistance in series with 25 ohms capacitive reactance. This is the standard way AC circuit impedances are expressed in complex notation for amateur radio analysis.

E5C07

Q: Where is the impedance of a pure resistance plotted on rectangular coordinates?

A: On the horizontal axis.

Notes: In rectangular impedance plots, the horizontal axis represents the resistive component while the vertical axis represents the reactive component. A pure resistance has no reactance, so its impedance lies entirely on the horizontal axis.

E5C08

Q: What coordinate system is often used to display the phase angle of a circuit containing resistance, inductive, and/or capacitive reactance?

A: Polar coordinates.

Notes: In AC circuit analysis, impedance and phase angle are conveniently represented as vectors (phasors) in polar coordinates, showing magnitude and angle. This makes it easy to visualize the phase relationships between voltage and current in reactive circuits for the Amateur Extra exam.

E5C09

Q: When using rectangular coordinates to graph the impedance of a circuit, what do the axes represent?

A: The X axis represents the resistive component, and the Y axis represents the reactive component.

Notes: Impedance can be expressed as a complex number, with resistance as the real part and reactance as the imaginary part. On a rectangular graph, the real (resistive) part is plotted on the X axis and the imaginary (reactive) part is plotted on the Y axis, which matches standard complex-plane representation used in amateur radio circuit analysis.

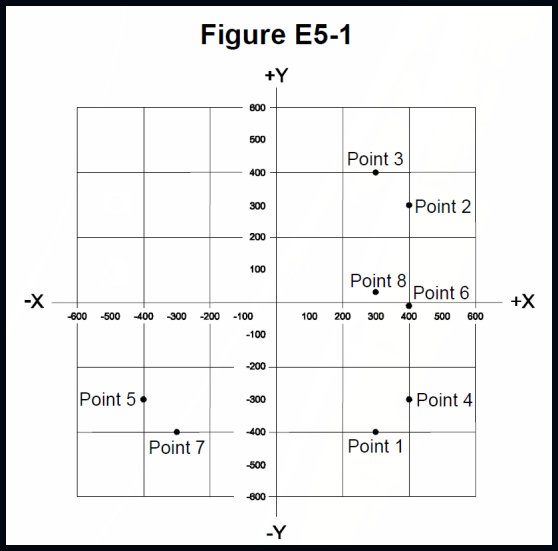

E5C10

Q: Which point on Figure E5-1 best represents the impedance of a series circuit consisting of a 400-ohm resistor and a 38-picofarad capacitor at 14 MHz?

A: Point 4.

Notes: At 14 MHz, the 38-picofarad capacitor provides a capacitive reactance that combines with the 400-ohm resistor to form an impedance with a 400-ohm resistive component and a capacitive (negative) reactance. Point 4 on Figure E5-1 is the plotted impedance that corresponds to these values for this series RC circuit.

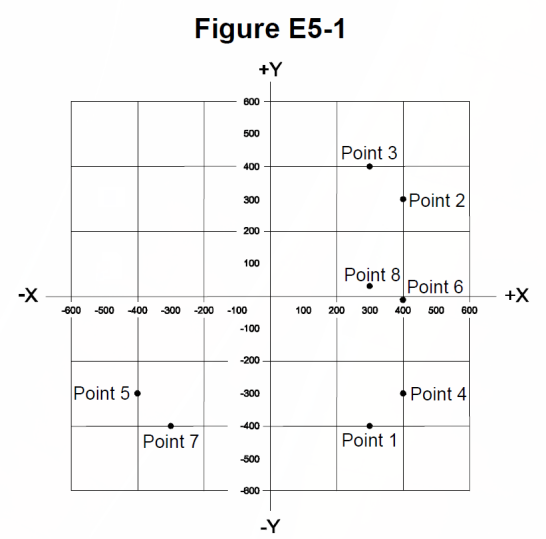

E5C11

Q: Which point in Figure E5-1 best represents the impedance of a series circuit consisting of a 300-ohm resistor and an 18-microhenry inductor at 3.505 MHz?

A: Point 3.

Notes: At 3.505 MHz, the inductive reactance of an 18-microhenry inductor combines with the 300-ohm resistance to produce an impedance with a 300-ohm resistive component and a positive reactive component. On the impedance diagram in Figure E5-1, point 3 corresponds to this combination of resistance and inductive reactance.

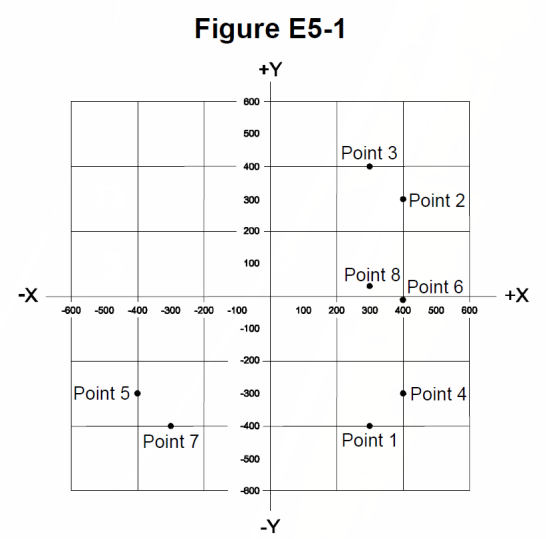

E5C12

Q: Which point on Figure E5-1 best represents the impedance of a series circuit consisting of a 300-ohm resistor and a 19-picofarad capacitor at 21.200 MHz?

A: Point 1.

Notes: At 21.200 MHz, the capacitive reactance of a 19 pF capacitor in series with a 300-ohm resistor produces an impedance with 300 ohms resistance and a specific capacitive reactance that corresponds to point 1 on Figure E5-1. This point matches the calculated complex impedance for that R–C series combination at the given frequency.

Group E5D - RF behavior, skin effect, and power

E5D01

Q: What is the result of conductor skin effect?

A: Resistance increases as frequency increases because RF current flows closer to the surface.

Notes: At higher RF frequencies, current is forced into a thinner layer near the surface of the conductor, effectively reducing the cross-sectional area carrying current. This reduced effective area increases the conductor's resistance as frequency increases, which is important in high-frequency circuit and antenna design on the Amateur Extra exam.

E5D02

Q: Why is it important to keep lead lengths short for components used in circuits for VHF and above?

A: To minimize inductive reactance.

Notes: At VHF and higher frequencies, even small lengths of wire behave like inductors, adding unwanted inductive reactance. Short leads reduce these parasitic inductive effects and help the circuit operate as intended at high frequencies.

E5D03

Q: What is the phase relationship between current and voltage for reactive power?

A: They are 90 degrees out of phase.

Notes: Reactive power arises in inductive and capacitive circuits where energy is alternately stored and returned, causing current and voltage to be shifted in time. In AC analysis, this stored-and-released power is represented by a 90-degree phase difference between current and voltage.

E5D04

Q: Why are short connections used at microwave frequencies?

A: To reduce phase shift along the connection.

Notes: At microwave frequencies, even small lengths of transmission line can introduce significant phase shift, which can degrade circuit performance. Keeping connections short minimizes this phase shift and helps maintain the intended signal timing and impedance characteristics in high-frequency amateur radio equipment.

E5D05

Q: What parasitic characteristic causes electrolytic capacitors to be unsuitable for use at RF?

A: Inductance.

Notes: At radio frequencies, the internal inductance of an electrolytic capacitor becomes significant enough that it no longer behaves like a pure capacitor. This parasitic inductance limits their effectiveness in RF circuits, so other capacitor types are preferred for RF applications.

E5D06

Q: What parasitic characteristic creates an inductor's self-resonance?

A: Inter-turn capacitance.

Notes: The stray capacitance between the turns of an inductor forms a resonant LC circuit with the inductor's own inductance. At the self-resonant frequency, this parasitic LC behavior dominates the inductor's response, which is important in high-frequency amateur radio circuit design.

E5D07

Q: What combines to create the self-resonance of a component?

A: The component's nominal and parasitic reactance.

Notes: In real components, unavoidable stray inductance and capacitance form parasitic reactances that interact with the intended (nominal) reactance. At a particular frequency these reactances can cancel, creating a natural or self-resonant frequency important for accurate circuit behavior in Amateur Extra-level designs.

E5D08

Q: What is the primary cause of loss in film capacitors at RF?

A: Skin effect.

Notes: At radio frequencies, current in the metalized electrodes of a film capacitor is forced toward the surface by skin effect, increasing effective resistance. This higher resistance leads to greater power dissipation and loss in the capacitor at RF.

E5D09

Q: What happens to reactive power in ideal inductors and capacitors?

A: Energy is stored in magnetic or electric fields, but power is not dissipated.

Notes: Reactive components like ideal inductors and capacitors alternately store and release energy in their fields without converting it to heat or other losses. In AC circuit analysis for the Extra exam, this is why reactive power does not represent real power dissipation in ideal components.

E5D10

Q: As a conductor's diameter increases, what is the effect on its electrical length?

A: It increases.

Notes: A thicker conductor changes the distribution of current and fields around it, which increases its effective electrical length relative to its physical length. In antenna and transmission line design, this means that larger-diameter conductors behave as if they are electrically longer at a given frequency.

E5D11

Q: How much real power is consumed in a circuit consisting of a 100-ohm resistor in series with a 100-ohm inductive reactance drawing 1 ampere?

A: 100 watts.

Notes: Only the resistive component consumes real power, calculated as $I^2R = (1\ A)^2 \times 100$ ohms = 100 watts. The inductive reactance contributes only to reactive power, not to real power dissipation.

E5D12

Q: What is reactive power?

A: Wattless, nonproductive power.

Notes: In AC circuits, reactive power represents energy that is alternately stored and released by inductors and capacitors, so it does not perform useful work. On the exam, this is identified as wattless, nonproductive power to distinguish it from real power that does actual work in a load.

SUBELEMENT E6 - Electronic and RF Components

Group E6A - Semiconductor physics, BJTs, and FETs

E6A01

Q: In what application is gallium arsenide used as a semiconductor material?

A: In microwave circuits.

Notes: Gallium arsenide has high electron mobility and low noise characteristics, making it especially suitable for high-frequency operation in microwave circuits. In the Amateur Extra exam context, it is associated with RF components used at microwave frequencies.

E6A02

Q: Which of the following semiconductor materials contains excess free electrons?

A: N-type.

Notes: In an N-type semiconductor, donor impurities add extra electrons to the crystal lattice, creating an excess of free electrons that act as the majority charge carriers. This electron surplus is what gives N-type material its characteristic electrical behavior used in diodes and transistors on the exam.

E6A03

Q: Why does a PN-junction diode not conduct current when reverse biased?

A: Holes in P-type material and electrons in the N-type material are separated by the applied voltage, widening the depletion region.

Notes: In reverse bias, the electric field pushes majority carriers away from the junction, increasing the width of the depletion region. This widened depletion region greatly reduces carrier flow across the junction, so almost no current can pass in normal operation.

E6A04

Q: What is the name given to an impurity atom that adds holes to a semiconductor crystal structure?

A: Acceptor impurity.

Notes: In semiconductor physics for amateur radio electronics, an acceptor impurity creates deficiency of electrons, producing mobile holes that enable P-type conductivity. This term identifies the dopant that accepts electrons and thereby increases the hole concentration in the crystal lattice.

E6A05

Q: How does DC input impedance at the gate of a field-effect transistor (FET) compare with that of a bipolar transistor?

A: An FET has higher input impedance.

Notes: In a FET, the gate is insulated from the channel and draws essentially no DC current, so its input impedance is very high. In a bipolar transistor, the base-emitter junction conducts current like a diode, resulting in a lower DC input impedance.

E6A06

Q: What is the beta of a bipolar junction transistor?

A: The change in collector current with respect to the change in base current.

Notes: In exam terminology, beta (β) is the small-signal current gain of a BJT, defined as how much the collector current changes for a given change in base current. This expresses the transistor's amplification factor for current in normal operation.

E6A07

Q: Which of the following indicates that a silicon NPN junction transistor is biased on?

A: Base-to-emitter voltage of approximately 0.6 volts to 0.7 volts.

Notes: In normal operation of a silicon NPN transistor, the base-emitter junction must be forward biased at about 0.6 to 0.7 volts for the transistor to conduct. This voltage range is a standard characteristic of silicon junctions used in amateur radio circuits and is tested on the Amateur Extra exam.

E6A08

Q: What is the term for the frequency at which the grounded-base current gain of a bipolar junction transistor has decreased to 0.7 of the gain obtainable at 1 kHz?

A: Alpha cutoff frequency.

Notes: The alpha cutoff frequency is defined where the transistor's grounded-base current gain (alpha) falls to 70% of its low-frequency (e.g., 1 kHz) value. This parameter characterizes the high-frequency performance limit of a BJT in grounded-base configuration for amateur radio and RF design work.

E6A09

Q: What is a depletion-mode field-effect transistor (FET)?

A: An FET that exhibits a current flow between source and drain when no gate voltage is applied.

Notes: In a depletion-mode FET, the channel is normally on, so current flows from source to drain with zero gate bias. Applying a gate voltage then reduces or depletes this current, which is important to understand when analyzing FET biasing in Amateur Extra exam problems.

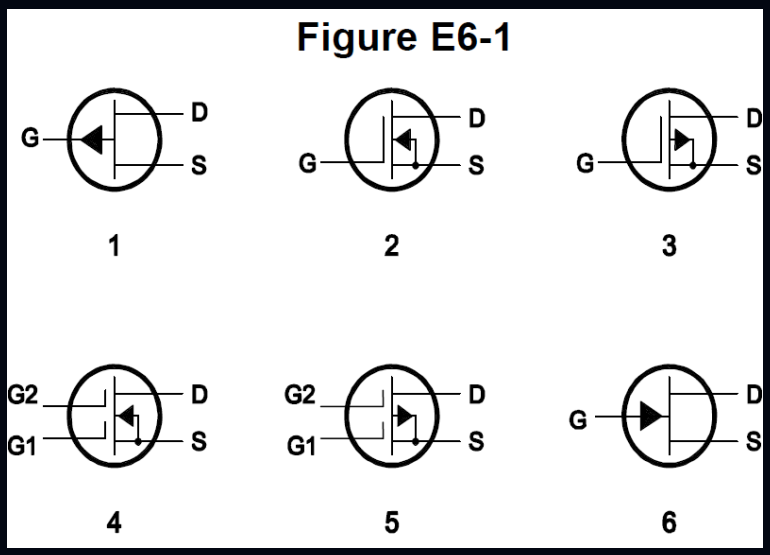

E6A10

Q: In Figure E6-1, which is the schematic symbol for an N-channel dual-gate MOSFET?

A: 4.

Notes: An N-channel dual-gate MOSFET is identified by a field-effect transistor symbol with two separate gate connections on the symbol for a single N-channel device. In the exam's Figure E6-1, symbol 4 corresponds to this dual-gate MOSFET configuration.

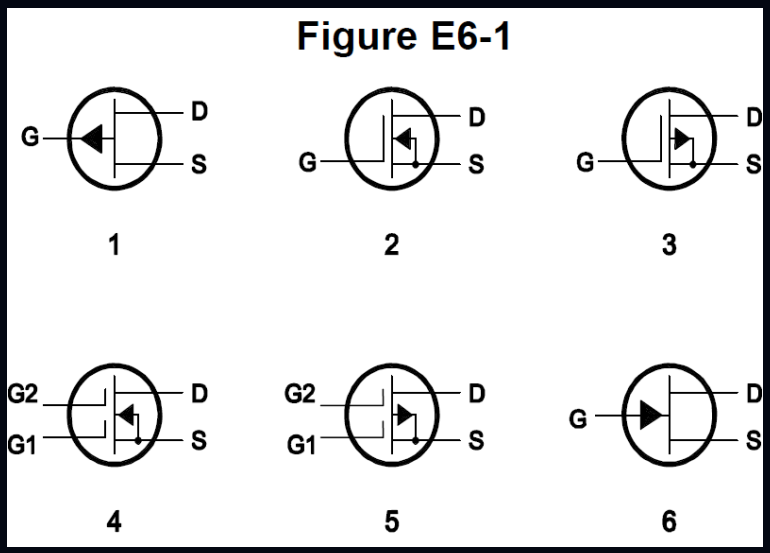

E6A11

Q: In Figure E6-1, which is the schematic symbol for a P-channel junction FET?

A: 1.

Notes: A P-channel JFET is identified on schematics by its specific symbol shape and the orientation of the channel and gate relative to conventional current flow. In the exam's Figure E6-1, symbol 1 matches the standard P-channel JFET symbol used in electronics diagrams.

E6A12

Q: What is the purpose of connecting Zener diodes between a MOSFET gate and its source or drain?

A: To protect the gate from static damage.

Notes: A MOSFET gate is highly sensitive to overvoltage from static discharge because of its thin oxide layer. Zener diodes clamp excessive voltage, preventing damage and improving reliability in amateur radio circuits.

Group E6B - Diode types, behavior, and applications

E6B01

Q: What is the most useful characteristic of a Zener diode?

A: A constant voltage drop under conditions of varying current.

Notes: In the breakdown region, a Zener diode is designed to hold a nearly constant voltage across it even as the current through it changes. This property makes it useful for voltage regulation and reference circuits in amateur radio equipment.

E6B02

Q: Which characteristic of a Schottky diode makes it a better choice than a silicon junction diode for use as a power supply rectifier?

A: Lower forward voltage drop.

Notes: In power supply rectifiers, a lower forward voltage drop reduces power loss and heat dissipation, improving efficiency. Schottky diodes typically have a significantly lower forward voltage than standard silicon junction diodes, making them preferable in this role.

E6B03

Q: What property of an LED's semiconductor material determines its forward voltage drop?

A: Band gap.

Notes: In an LED, the band gap sets the energy of the photons produced when electrons recombine, which directly determines the forward voltage required for conduction and light emission. Different semiconductor band gaps therefore result in different forward voltage drops for LEDs used in amateur radio and other circuits.

E6B04

Q: What type of semiconductor device is designed for use as a voltage-controlled capacitor?

A: Varactor diode.

Notes: A varactor diode changes its junction capacitance based on the applied reverse-bias voltage, allowing it to act as a tunable capacitor. This makes it useful in frequency-agile circuits such as VFOs, PLLs, and tuned RF stages in Amateur Extra-level designs.

E6B05

Q: What characteristic of a PIN diode makes it useful as an RF switch?

A: Low junction capacitance.

Notes: Low junction capacitance allows a PIN diode to pass or block RF signals with minimal reactance, making it effective for switching at radio frequencies. This characteristic helps maintain signal integrity and reduces unwanted coupling in RF circuits used in Amateur Extra class applications.

E6B06

Q: Which of the following is a common use of a Schottky diode?

A: As a VHF/UHF mixer or detector.

Notes: Schottky diodes have very fast switching speed and low forward voltage drop, which makes them well suited for mixing and detecting high-frequency VHF and UHF signals in amateur radio equipment. They are commonly found in receiver front ends and detector stages where low noise and high-frequency performance are important.

E6B07

Q: What causes a junction diode to fail from excessive current?

A: Excessive junction temperature.

Notes: When too much current flows through a junction diode, power dissipation raises the junction temperature beyond its safe limit, damaging the semiconductor material. This thermal damage is what ultimately causes the diode to fail in amateur radio and other electronic circuits.

E6B08

Q: Which of the following is a Schottky barrier diode?

A: Metal-semiconductor junction.

Notes: In a Schottky barrier diode, the rectifying action occurs at the interface between a metal and a semiconductor, rather than between two semiconductor regions. This metal-semiconductor junction gives the device its characteristic low forward voltage drop and fast switching behavior important in RF and high-speed circuits for the Amateur Extra exam context.

E6B09

Q: What is a common use for point-contact diodes?

A: As an RF detector.

Notes: Point-contact diodes have very low junction capacitance and can rectify small RF signals, making them well suited for detecting or demodulating RF in receiver and test circuits. In the Amateur Extra exam context, they are classically associated with RF detection applications.

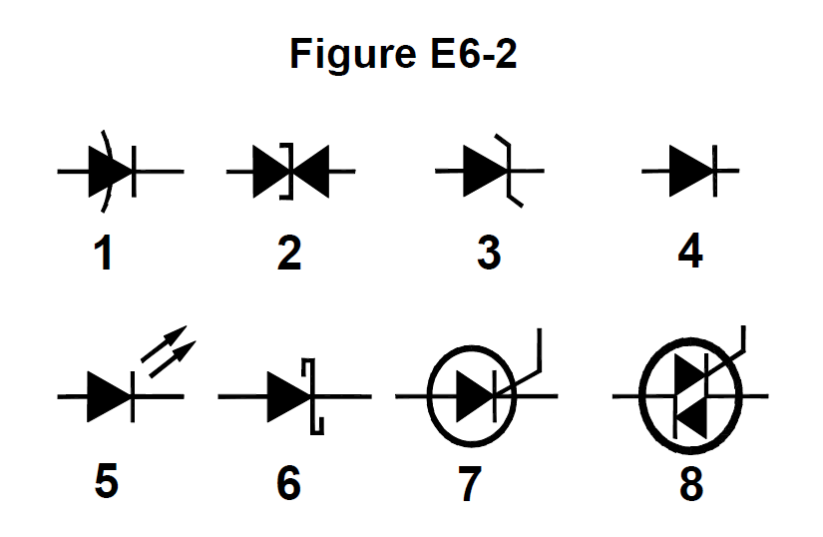

E6B10

Q: In Figure E6-2, which is the schematic symbol for a Schottky diode?

A: 6.

Notes: On the Amateur Extra exam, the Schottky diode is identified by the standard diode symbol with distinctive added lines indicating its metal–semiconductor junction, which is shown as symbol 6 in Figure E6-2. Recognizing this symbol helps distinguish Schottky diodes from other diode types in circuit diagrams.

E6B11

Q: What is used to control the attenuation of RF signals by a PIN diode?

A: Forward DC bias current.

Notes: A PIN diode's RF resistance depends on the level of forward DC bias current, which changes the charge in its intrinsic region. By varying this current, the diode's attenuation of RF signals can be precisely controlled in circuits such as attenuators and RF switches.

Group E6C - Digital IC families, logic, and PLDs

E6C01

Q: What is the function of hysteresis in a comparator?

A: To prevent input noise from causing unstable output signals.

Notes: Hysteresis adds a small difference between the switching thresholds of a comparator so that minor noise or ripple on the input does not cause rapid, unwanted switching at the output. This stabilizes the output signal in practical radio and electronic circuits where noise is always present.

E6C02

Q: What happens when the level of a comparator's input signal crosses the threshold voltage?

A: The comparator changes its output state.

Notes: A comparator is designed to switch its output when the input voltage rises above or falls below a defined threshold voltage. This digital-like switching behavior is useful in amateur radio circuits for detecting signal levels and creating control or triggering signals.

E6C03

Q: What is tri-state logic?

A: Logic devices with 0, 1, and high-impedance output states.

Notes: In Amateur Extra exam digital logic context, tri-state outputs allow a device to place its output line in a high-impedance state so it does not drive the bus, in addition to normal logic 0 and logic 1 levels. This enables multiple devices to share a common signal line without interfering with each other when they are not actively driving it.

E6C04

Q: Which of the following is an advantage of BiCMOS logic?

A: It has the high input impedance of CMOS and the low output impedance of bipolar transistors.

Notes: BiCMOS logic combines CMOS and bipolar technologies so that circuit inputs draw very little current while outputs can drive loads strongly. This combination is beneficial in RF and digital interface stages where minimal loading and strong signal drive are both important.

E6C05

Q: Which of the following digital logic families has the lowest power consumption?

A: CMOS.

Notes: CMOS logic uses complementary MOSFET structures that draw very little static current, so its overall power consumption is lower than other logic families. This makes CMOS well suited for low-power and battery-operated amateur radio equipment and digital circuits.

E6C06

Q: Why do CMOS digital integrated circuits have high immunity to noise on the input signal or power supply?

A: The input switching threshold is about half the power supply voltage.

Notes: With the switching threshold set near half the supply voltage, small noise fluctuations are unlikely to move the input across the threshold, so the logic state remains stable. This makes CMOS inputs and their associated logic levels more resistant to typical RF and power-supply noise encountered in amateur radio equipment.

E6C07

Q: What best describes a pull-up or pull-down resistor?

A: A resistor connected to the positive or negative supply used to establish a voltage when an input or output is an open circuit.

Notes: Digital and logic circuits in amateur radio equipment use pull-up or pull-down resistors so that inputs and outputs assume a known logic level instead of floating when nothing is actively driving the line. This prevents unpredictable behavior and noise from affecting circuit operation.

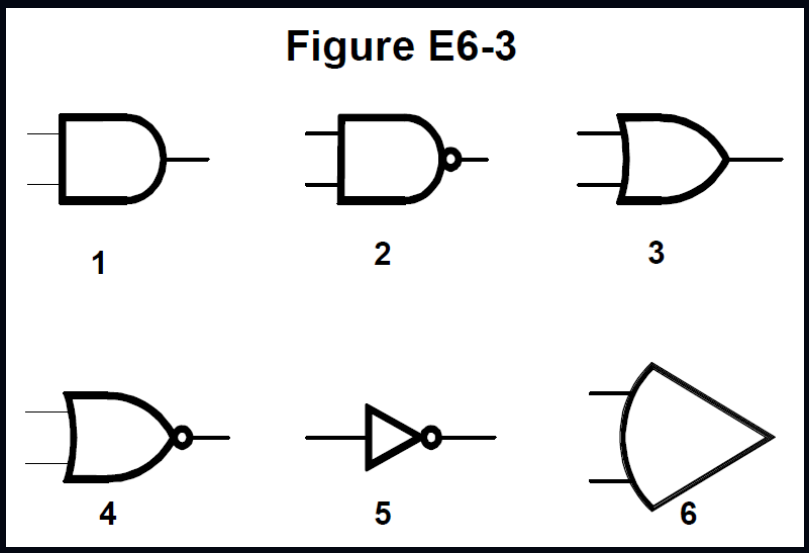

E6C08

Q: In Figure E6-3, which is the schematic symbol for a NAND gate?

A: 2.

Notes: A NAND gate is drawn as an AND gate symbol with a small inversion circle on its output. In Figure E6-3, symbol 2 matches this standard digital logic symbol for a NAND gate used in amateur radio circuit diagrams.

E6C09

Q: What is used to design the configuration of a field-programmable gate array (FPGA)?

A: Hardware description language (HDL).

Notes: In amateur radio and digital electronics, FPGAs are programmed at the logic level, and HDLs provide a formal way to describe the internal digital circuits and signal paths. The HDL design is then synthesized and loaded into the FPGA to implement the desired hardware functions.

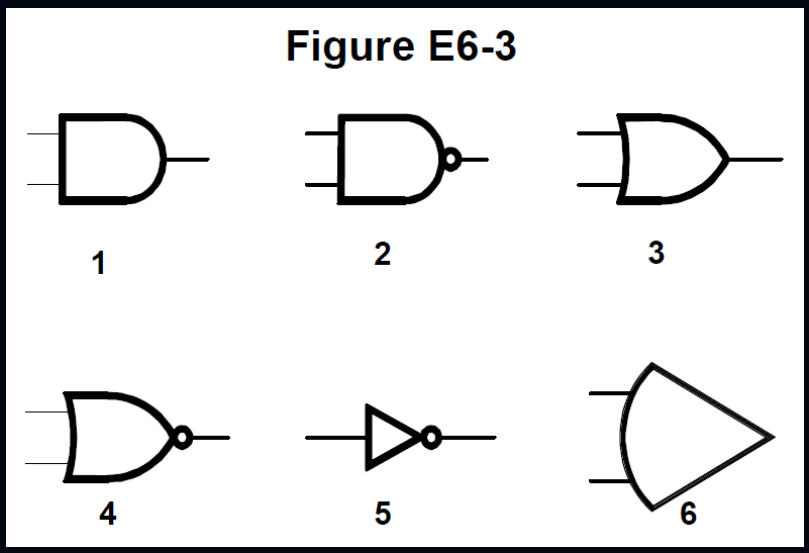

E6C10

Q: In Figure E6-3, which is the schematic symbol for a NOR gate?

A: 4.

Notes: A NOR gate is a logic gate that outputs a logic high only when all inputs are logic low, and its schematic symbol is an OR gate symbol with a small inversion circle on the output as shown by symbol 4 in the figure. Recognizing this standard logic symbol is important for interpreting digital circuit diagrams in the Amateur Extra exam.

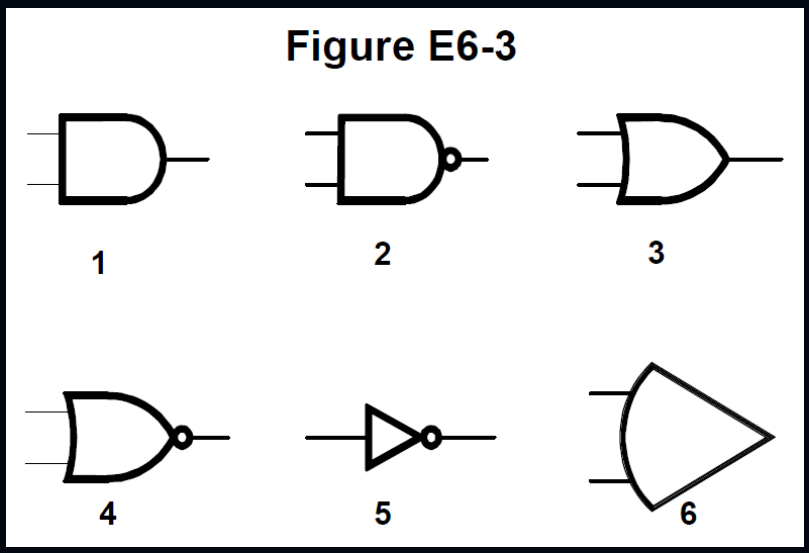

E6C11

Q: In Figure E6-3, which is the schematic symbol for the NOT operation (inversion)?

A: 5.

Notes: Digital NOT or inverter gates are drawn as a triangle with a small circle at the output, and symbol 5 in Figure E6-3 matches this standard logic symbol. Recognizing common logic gate symbols helps in understanding digital circuits used in amateur radio equipment and exam diagrams.

Group E6D - Inductors, transformers, and piezoelectric devices

E6D01

Q: What is piezoelectricity?

A: A characteristic of materials that generate a voltage when stressed and that flex when a voltage is applied.

Notes: Certain crystals and ceramics used in amateur radio, such as in microphones and frequency-control devices, exhibit piezoelectricity by converting mechanical stress to voltage and electrical voltage to mechanical motion. This bidirectional property is fundamental to many RF and audio transducers in radio equipment.

E6D02

Q: What is the equivalent circuit of a quartz crystal?

A: Series RLC in parallel with a shunt C representing electrode and stray capacitance.

Notes: A quartz crystal behaves like a series RLC circuit that sets its resonant characteristics, and this branch is paralleled by a shunt capacitance that models the crystal's electrode and stray capacitances. This equivalent circuit is used in Amateur Extra–level analysis of crystal resonators and oscillators.

E6D03

Q: Which of the following is an aspect of the piezoelectric effect?

A: Mechanical deformation of material due to the application of a voltage.

Notes: In the piezoelectric effect, an applied electrical voltage causes certain crystalline materials to physically deform. This property is used in amateur radio components like crystal oscillators and filters, where voltage-induced mechanical changes help control frequency and signal characteristics.

E6D04

Q: Why are cores of inductors and transformers sometimes constructed of thin layers?

A: To reduce power loss from eddy currents in the core.

Notes: Thin laminated layers in the magnetic core increase the resistance to circulating eddy currents, which reduces I^2R losses in the core material. This improves efficiency and reduces heating in inductors and transformers used in amateur radio equipment.

E6D05

Q: How do ferrite and powdered iron compare for use in an inductor core?

A: Ferrite cores generally require fewer turns to produce a given inductance value.

Notes: Ferrite has a higher effective permeability than powdered iron, so an inductor wound on a ferrite core reaches the desired inductance with fewer turns. This property makes ferrite cores especially useful where compact inductors and efficient magnetic coupling are important in Amateur Extra–level RF designs.

E6D08

Q: Which of the following materials has the highest temperature stability of its magnetic characteristics?

A: Powdered iron.

Notes: Powdered iron cores maintain their inductance and permeability more consistently over temperature changes, which is important for stable filters and tuned circuits. This temperature stability makes powdered iron especially suitable for precise RF applications in the Amateur Extra exam context.

E6D09

Q: What devices are commonly used as VHF and UHF parasitic suppressors at the input and output terminals of a transistor HF amplifier?

A: Ferrite beads.

Notes: Ferrite beads provide high impedance at VHF and UHF frequencies, which helps suppress unwanted parasitic oscillations. In a transistor HF amplifier, placing ferrite beads at the input and output terminals stabilizes the amplifier by attenuating these higher-frequency signals.

E6D10

Q: What is a primary advantage of using a toroidal core instead of a solenoidal core in an inductor?

A: Toroidal cores confine most of the magnetic field within the core material.

Notes: By keeping most of the magnetic field inside the core, a toroidal inductor reduces external magnetic fields and associated interference. This improves performance and helps prevent unwanted coupling in closely packed amateur radio circuits.

E6D11

Q: Which type of core material decreases inductance when inserted into a coil?

A: Brass.

Notes: Brass is a non-magnetic, conductive material that reduces the effective magnetic field within the coil, thereby decreasing its inductance. In RF and tuning circuits, inserting a brass slug into a coil is a common way to lower the coil's inductance for adjustment purposes.

E6D12

Q: What causes inductor saturation?

A: Operation at excessive magnetic flux.

Notes: When the magnetic flux in an inductor’s core exceeds the material’s ability to support additional magnetization, the core saturates and the inductance effectively decreases. In amateur radio circuits, this occurs when current or signal conditions drive the core beyond its designed magnetic flux limit.

Group E6E - RF semiconductor materials, packages, and usage

E6E01

Q: Why is gallium arsenide (GaAs) useful for semiconductor devices operating at UHF and higher frequencies?

A: Higher electron mobility.

Notes: Higher electron mobility in GaAs allows charge carriers to move faster, enabling efficient operation at very high (UHF and above) frequencies. This property makes GaAs devices well suited for high-speed, high-frequency amateur radio applications.

E6E02

Q: Which of the following device packages is a through-hole type?

A: DIP.

Notes: DIP components are designed with leads that pass through holes in the printed circuit board, making them a classic example of through-hole mounting used in many amateur radio circuits. Recognizing package types like DIP helps in selecting and assembling components correctly for RF and digital projects in the Amateur Extra exam context.

E6E03

Q: Which of the following materials supports the highest frequency of operation when used in MMICs?

A: Gallium nitride.

Notes: Gallium nitride (GaN) has superior high-electron-mobility and wide bandgap properties, allowing MMICs to operate efficiently at very high microwave and millimeter-wave frequencies. For Extra-class operators, this makes GaN a key material in advanced high-frequency RF and microwave amplifier design.

E6E04

Q: Which is the most common input and output impedance of MMICs?

A: 50 ohms.

Notes: Most RF systems and test equipment use 50 ohms as the standard impedance, so MMICs are typically designed with 50-ohm input and output ports to ensure easy matching and minimal signal reflection. This standardization simplifies circuit design and integration in amateur radio equipment at microwave frequencies.

E6E05

Q: Which of the following noise figure values is typical of a low-noise UHF preamplifier?

A: 0.5 dB.

Notes: Modern low-noise UHF preamplifiers used in amateur radio commonly achieve noise figures around 0.5 dB. Such a low noise figure significantly improves receiver sensitivity by adding very little noise to weak incoming signals.

E6E06

Q: What characteristics of MMICs make them a popular choice for VHF through microwave circuits?

A: Controlled gain, low noise figure, and constant input and output impedance over the specified frequency range.

Notes: These characteristics simplify RF design and matching while maintaining predictable performance across the operating band. In VHF through microwave applications, stable gain, low noise, and consistent impedance are critical for efficient and low-distortion signal handling in amateur radio equipment.

E6E07

Q: What type of transmission line is often used for connections to MMICs?

A: Microstrip.

Notes: MMICs operate at microwave frequencies where microstrip, a planar transmission line formed on a circuit board substrate, provides good impedance control and low-loss interconnections. This makes microstrip well suited for integrating MMICs into RF and microwave circuits in Amateur Extra–level designs.

E6E08

Q: How is power supplied to the most common type of MMIC?

A: Through a resistor and/or RF choke connected to the amplifier output lead.

Notes: Many MMIC designs use the output lead as the DC bias point, feeding power through a resistor or RF choke so RF is passed while DC is supplied. This configuration simplifies biasing and decouples the DC supply from the RF path for stable amplifier operation in amateur radio circuits.

E6E09

Q: Which of the following component package types have the least parasitic effects at frequencies above the HF range?

A: Surface mount.

Notes: Surface mount packages minimize lead length and physical size, which reduces unwanted inductance and capacitance that degrade circuit performance at VHF, UHF, and higher frequencies. This makes them preferred for high-frequency amateur radio designs beyond the HF range.

E6E10

Q: What advantage does surface-mount technology offer at RF compared to using through-hole components?

A: All these choices are correct:
- Smaller circuit area
- Shorter circuit board traces
- Components have less parasitic inductance and capacitance

Notes: The correct answer is that all the listed benefits apply, because surface-mount components minimize unwanted inductance and capacitance while allowing more compact, better-controlled RF circuit layouts. These combined effects improve performance and stability at radio frequencies, which is why surface-mount technology is preferred for RF designs on the Amateur Extra exam.

E6E11

Q: What is a characteristic of DIP packaging used for integrated circuits?

A: Two rows of connecting pins on opposite sides of package (dual in-line package).

Notes: DIP, or dual in-line package, is specifically defined by its two parallel rows of pins that plug into sockets or through-hole circuit board pads. This pin arrangement makes it easy to mount and replace integrated circuits in traditional through-hole designs.

E6E12

Q: Why are DIP through-hole package ICs not typically used at UHF and higher frequencies?

A: Excessive lead length.

Notes: At UHF and above, even small lead lengths act as unintended inductors and capacitors, disturbing the circuit's intended impedance and RF behavior. Shorter, lower-inductance connections provided by other package types are therefore preferred for stable operation at these frequencies.

Group E6F - Electro-optical devices, sensors, and isolators

E6F01

Q: What absorbs the energy from light falling on a photovoltaic cell?

A: Electrons.

Notes: Incoming photons transfer their energy to electrons in the semiconductor, allowing them to move and create electrical current. This photoelectric effect is the basis for how photovoltaic cells generate usable DC power in radio and other applications.

E6F02

Q: What happens to photoconductive material when light shines on it?

A: Resistance decreases.

Notes: Photoconductive materials generate more charge carriers when illuminated, which allows current to flow more easily and lowers their resistance. This light-dependent resistance change is the basis of devices like light-dependent resistors used in amateur radio and electronics circuits.

E6F03

Q: What is the most common configuration of an optoisolator or optocoupler?

A: An LED and a phototransistor.

Notes: An LED and a phototransistor provide optical signal transfer with electrical isolation between circuits, which is widely used in radio and other electronic control interfaces. This arrangement allows a low-level control signal to safely drive higher-voltage or noisy circuits without direct electrical connection.

E6F04

Q: What is the photovoltaic effect?

A: The conversion of light to electrical energy.

Notes: In the exam context, the photovoltaic effect describes how certain materials, such as those used in solar cells, generate electrical energy when exposed to light. This principle is important in amateur radio for powering equipment with solar panels in remote or portable operations.

E6F05

Q: Which of the following describes an optical shaft encoder?

A: A device that detects rotation by interrupting a light source with a patterned wheel.

Notes: In amateur radio and related equipment, optical shaft encoders convert rotational position or movement into electrical signals by passing light through or blocking it with a patterned disk. This optical interruption method provides precise, contactless sensing of shaft rotation for tuning controls and other position-reading functions.

E6F06

Q: Which of these materials is most commonly used to create photoconductive devices?

A: Crystalline semiconductor.

Notes: In photoconductive devices, the crystalline structure of a semiconductor allows its conductivity to change in response to light, which is essential for their operation. This behavior makes crystalline semiconductors the standard material for such optoelectronic components in amateur radio and related electronics.

E6F07

Q: What is a solid-state relay?

A: A device that uses semiconductors to implement the functions of an electromechanical relay.

Notes: In Amateur Extra exam context, a solid-state relay performs the same switching and isolation roles as a traditional relay but uses semiconductor devices instead of moving mechanical contacts. This allows for faster, quieter, and more reliable switching in radio circuits and control systems.

E6F08

Q: Why are optoisolators often used in conjunction with solid-state circuits that control 120 VAC circuits?

A: Optoisolators provide an electrical isolation between a control circuit and the circuit being switched.

Notes: In amateur radio and other electronics, optoisolators use light to transfer a signal across an insulating barrier, preventing a direct electrical connection between the low-voltage control side and the dangerous 120 VAC side. This isolation helps protect sensitive solid-state components and the operator from high-voltage faults or transients in the switched circuit.

E6F09

Q: What is the efficiency of a photovoltaic cell?

A: The relative fraction of light that is converted to current.

Notes: In the exam context, photovoltaic cell efficiency quantifies how effectively incident light energy is turned into electrical current. This measure is important in amateur radio for understanding how well solar panels can power radio equipment.

E6F10

Q: What is the most common material used in power-generating photovoltaic cells?

A: Silicon.

Notes: Silicon is widely used in photovoltaic cells because it is an abundant semiconductor material with well-understood properties for efficiently converting sunlight into electrical power. Most commercial solar panels for amateur radio power systems and general use are based on silicon cells.

E6F11

Q: What is the approximate open-circuit voltage produced by a fully illuminated silicon photovoltaic cell?

A: 0.5 volts.

Notes: Silicon photovoltaic cells typically develop about 0.5 volts across their terminals under full illumination with no load connected. This characteristic open-circuit voltage is a standard reference value used in amateur radio and electronics design involving solar cells.

SUBELEMENT E7 - Practical Radio Circuits

Group E7A - Digital logic circuits and frequency dividers

E7A01

Q: Which circuit is bistable?

A: A flip-flop.

Notes: A flip-flop has two stable output states and remains in one of those states until it is triggered to change, which is the defining characteristic of a bistable circuit in digital and radio-frequency control logic. In amateur radio equipment, flip-flops are commonly used for functions such as frequency dividers, state control, and digital sequencing.

E7A02

Q: What is the function of a decade counter?

A: It produces one output pulse for every 10 input pulses.

Notes: In amateur radio and digital electronics, a decade counter is a frequency divider that counts input pulses and generates one output pulse for every group of 10 received. This is useful for frequency division, timing, and driving digital displays in radio equipment.

E7A03

Q: Which of the following can divide the frequency of a pulse train by 2?

A: A flip-flop.

Notes: A flip-flop changes state on each input pulse, so its output frequency is half the input pulse frequency. This makes it a standard digital building block for frequency division in radio and signal processing circuits on the Amateur Extra exam.

E7A04

Q: How many flip-flops are required to divide a signal frequency by 16?

A: 4.

Notes: Each flip-flop in a binary divider divides the input frequency by 2, so 4 flip-flops divide the signal by 2^4, which equals 16. This is a common technique in digital frequency division used in amateur radio circuits.

E7A05

Q: Which of the following circuits continuously alternates between two states without an external clock signal?

A: Astable multivibrator.

Notes: In amateur radio and digital electronics, an astable multivibrator is used as a free-running oscillator because it repeatedly switches between two output levels on its own. This behavior provides a continuous square-wave signal without any external timing source.

E7A06

Q: What is a characteristic of a monostable multivibrator?

A: It switches temporarily to an alternate state for a set time.

Notes: In amateur radio and other electronics applications, a monostable multivibrator is used as a one-shot timer that, when triggered, changes state for a defined time interval and then returns to its stable state. This timed pulse behavior makes it useful for shaping signals, keying circuits, or generating precise timing events in radio equipment.

E7A07

Q: What logical operation does a NAND gate perform?

A: It produces a 0 at its output only if all inputs are 1.

Notes: A NAND gate is the inverse of an AND gate, so it outputs 0 only when every input is 1 and outputs 1 in all other input conditions. In amateur radio digital and logic circuits, NAND gates are commonly used because this behavior allows flexible implementation of complex logic functions.

E7A08

Q: What logical operation does an OR gate perform?

A: It produces a 1 at its output if any input is 1.

Notes: In digital logic used in amateur radio equipment and signal processing, an OR gate outputs a logic 1 when one or more of its inputs are at logic 1. This behavior is fundamental to combining control signals and conditions in radio circuits and digital systems.

E7A09

Q: What logical operation is performed by a two-input exclusive NOR gate?

A: It produces a 0 at its output if one and only one of its inputs is 1.

Notes: An exclusive NOR gate outputs 0 when the two inputs are different, which occurs when one and only one input is 1 in digital logic used in radio circuits. This behavior is important in digital communication and control systems found in advanced amateur radio equipment.

E7A10

Q: What is a truth table?

A: A list of inputs and corresponding outputs for a digital device.

Notes: In digital electronics used in amateur radio equipment, a truth table systematically shows how each possible combination of logic inputs produces a specific logic output. This helps in analyzing and designing digital circuits such as logic gates, encoders, and decoders found in modern radios.

E7A11

Q: What does “positive logic” mean in reference to logic devices?

A: High voltage represents a 1, low voltage a 0.

Notes: Digital circuits use voltage levels to represent binary states, and in positive logic the higher voltage level is defined as the active or '1' state. This convention is common in amateur radio digital and control circuitry, simplifying design and interpretation of logic signals.

Group E7B - Amplifier classes, design, and distortion control

E7B01

Q: For what portion of the signal cycle does each active element in a push-pull, Class AB amplifier conduct?

A: More than 180 degrees but less than 360 degrees.

Notes: Class AB operation is defined by conduction that extends slightly beyond half of the RF cycle but not for the full cycle, improving linearity while reducing distortion and power dissipation compared to other classes. This conduction angle characteristic is essential for linear amplification in many amateur radio RF stages.

E7B02

Q: What is a Class D amplifier?

A: An amplifier that uses switching technology to achieve high efficiency.

Notes: In a Class D amplifier, the active devices operate as switches rather than linear elements, which greatly reduces power dissipation and results in high efficiency. This switching operation is why Class D designs are favored where efficiency and reduced heat are important, such as in modern RF and audio applications.

E7B03

Q: What circuit is required at the output of an RF switching amplifier?

A: A filter to remove harmonic content.

Notes: RF switching amplifiers generate significant harmonic energy due to their non-linear operation. A filter at the output is needed to suppress these harmonics so the transmitted signal stays within its assigned bandwidth and meets FCC spectral purity requirements.

E7B04

Q: What is the operating point of a Class A common emitter amplifier?

A: Approximately halfway between saturation and cutoff.

Notes: In a Class A common emitter amplifier, the transistor is biased so it remains active over the entire input signal cycle, which is achieved by placing the operating point midway between saturation and cutoff. This midpoint biasing allows maximum undistorted output swing for the amplified RF or audio signal.

E7B05

Q: What can be done to prevent unwanted oscillations in an RF power amplifier?

A: Install parasitic suppressors and/or neutralize the stage.

Notes: Parasitic suppressors damp high-frequency unintended resonances, while neutralization cancels feedback that could cause self-oscillation in RF amplifier stages. Together, these techniques stabilize the amplifier so it only amplifies the intended signal for Amateur Extra-class operation.

E7B06

Q: What is a characteristic of a grounded-grid amplifier?

A: Low input impedance.

Notes: In a grounded-grid amplifier, the input is applied between the cathode and ground, which presents a low impedance to the driving stage. This low input impedance makes it suitable for use with low-impedance drivers in high-frequency and high-power amateur radio applications.

E7B07

Q: Which of the following is the likely result of using a Class C amplifier to amplify a single-sideband phone signal?

A: Signal distortion and excessive bandwidth.

Notes: Class C amplifiers are highly non-linear and clip the SSB waveform, which distorts the signal. This non-linearity spreads the signal's energy over a wider frequency range, causing excessive bandwidth and interference outside the intended channel.

E7B08

Q: Why are switching amplifiers more efficient than linear amplifiers?

A: The switching device is at saturation or cutoff most of the time.

Notes: In a switching amplifier, the active device is either fully on (saturation) or fully off (cutoff), so it dissipates very little power as heat. This high-efficiency operation is useful in amateur radio transmitters where minimizing wasted power and heat is important.

E7B09

Q: What is characteristic of an emitter follower (or common collector) amplifier?

A: Input and output signals in-phase.

Notes: In an emitter follower (common collector) configuration, the output is taken from the emitter, which follows the input voltage at the base without inverting it. This means the output signal has the same phase as the input signal, an important characteristic for buffering and impedance matching in amateur radio circuits.

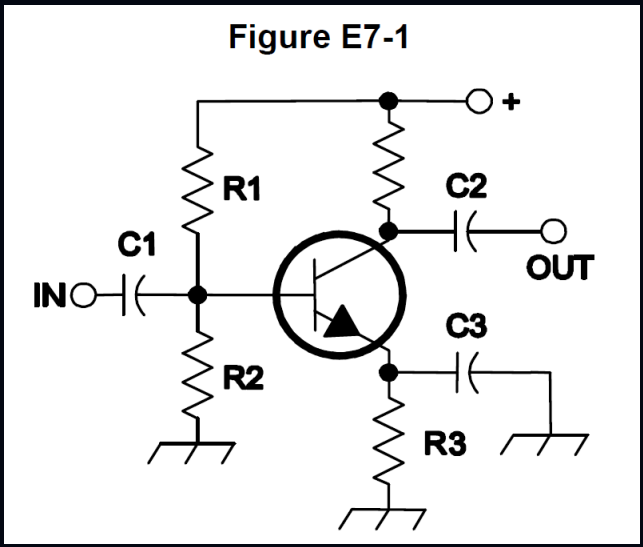

E7B10

Q: In Figure E7-1, what is the purpose of R1 and R2?

A: Voltage divider bias.

Notes: R1 and R2 form a voltage divider that sets a stable DC bias voltage at the transistor's base or gate so the amplifier operates in the desired region of its characteristic curve. This biasing method helps maintain consistent performance despite variations in device parameters or supply voltage.

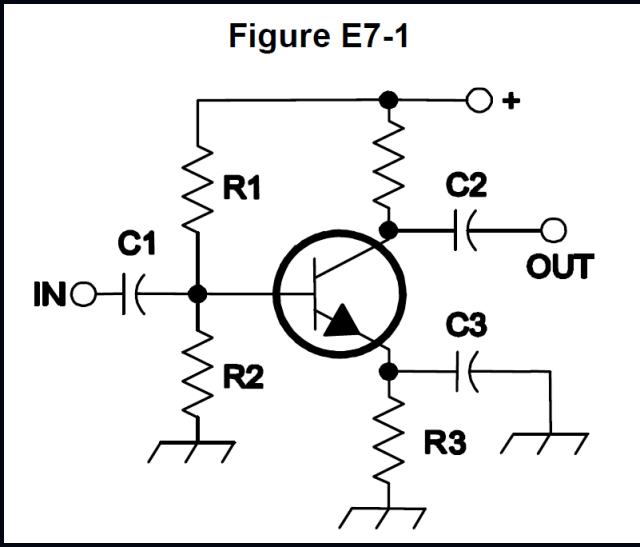

E7B11

Q: In Figure E7-1, what is the purpose of R3?

A: Self bias.

Notes: R3 provides self bias by developing a voltage from the circuit's own operating current, which automatically sets the transistor's operating point. This type of biasing is used in amplifier stages to maintain stable operation without requiring an external fixed bias source.

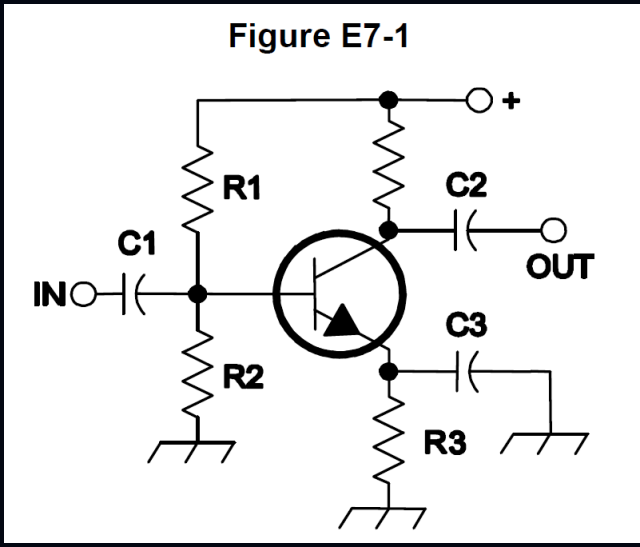

E7B12

Q: What type of amplifier circuit is shown in Figure E7-1?

A: Common emitter.

Notes: In a common emitter amplifier, the transistor's emitter terminal is the common reference point for both input and output, which matches the configuration depicted in Figure E7-1. This configuration is widely used in amateur radio circuits for voltage amplification with significant gain.

Group E7C - Filters, matching networks, and their applications

E7C01

Q: How are the capacitors and inductors of a low-pass filter Pi-network arranged between the network's input and output?

A: A capacitor is connected between the input and ground, another capacitor is connected between the output and ground, and an inductor is connected between the input and output.

Notes: This arrangement forms the classic Pi-network, where the shunt capacitors to ground and the series inductor between input and output attenuate higher frequencies while passing lower frequencies. It is commonly used in amateur radio to provide low-pass filtering for transmitters and other RF stages.

E7C02

Q: What is the frequency response of a T-network with series capacitors and a shunt inductor?

A: High-pass.

Notes: In this T-network, the series capacitors increasingly pass higher-frequency signals while the shunt inductor presents lower impedance at low frequencies, attenuating them. This combination results in a high-pass response, which is useful in RF filtering applications for the Amateur Extra exam context.

E7C03

Q: What is the purpose of adding an inductor to a Pi-network to create a Pi-L-network?

A: Greater harmonic suppression.

Notes: The extra series inductor in a Pi-L-network improves filtering of unwanted harmonic frequencies beyond the fundamental signal. This results in cleaner transmitted signals that better meet FCC spectral purity requirements for Amateur Extra operators.

E7C04

Q: How does an impedance-matching circuit transform a complex impedance to a resistive impedance?

A: It cancels the reactive part of the impedance and changes the resistive part to the desired value.

Notes: In RF circuits, impedance-matching networks use reactive components to neutralize (cancel) the unwanted reactance so only resistance remains. The circuit is then configured so that the remaining resistance equals the desired value for maximum power transfer and proper system matching in amateur radio applications.

E7C05

Q: Which filter type has ripple in the passband and a sharp cutoff?

A: A Chebyshev filter.

Notes: In amateur radio equipment design, a Chebyshev filter is chosen when a sharper transition between passband and stopband is needed, even though it introduces ripple within the passband. This characteristic makes it useful in RF and IF stages where steep selectivity is more important than a perfectly flat passband response.

E7C06

Q: What are the characteristics of an elliptical filter?

A: Extremely sharp cutoff with one or more notches in the stop band.

Notes: Elliptical filters are designed for very selective RF applications, providing rapid attenuation beyond the passband. The additional notches in the stop band further suppress unwanted signals at specific frequencies, improving interference rejection for Amateur Extra level designs.

E7C07

Q: Which describes a Pi-L network?

A: A Pi-network with an additional output series inductor.

Notes: In transmitter output matching circuits, a Pi-L network adds a series inductor at the output of a standard Pi-network. This extra inductor improves impedance matching and harmonic suppression for Amateur Extra class RF designs.

E7C08

Q: Which of the following is most frequently used as a band-pass or notch filter in VHF and UHF transceivers?

A: A helical filter.

Notes: Helical filters provide sharp, tunable band-pass or notch characteristics at VHF and UHF frequencies in a compact form. This makes them well suited for selectivity and interference rejection in modern VHF/UHF transceiver front ends and IF stages.

E7C09

Q: What is a crystal lattice filter?

A: A filter for low-level signals made using quartz crystals.

Notes: Quartz crystals provide very stable and narrow frequency-selective characteristics, making them ideal for filtering low-level signals in receiver IF stages. In the Amateur Extra exam context, this identifies the specific type of filter construction used in precise RF signal processing.

E7C10

Q: Which of the following filters is used in a 2-meter band repeater duplexer?

A: A cavity filter.

Notes: A cavity filter provides the narrow, high-Q filtering needed in a 2-meter repeater duplexer to separate the transmitter and receiver frequencies. This high isolation prevents the strong transmitter signal from overloading the sensitive receiver on the same antenna system.

E7C11

Q: Which of the following measures a filter’s ability to reject signals in adjacent channels?

A: Shape factor.

Notes: Shape factor compares a filter’s bandwidth at two different attenuation levels, indicating how sharply it transitions from the passband to the stopband. In Amateur Extra exam context, it is the standard figure of merit for how well a filter rejects nearby interfering signals on adjacent channels.

Group E7D - Power supplies, regulation, and solar controllers

E7D01

Q: How does a linear electronic voltage regulator work?

A: The conduction of a control element is varied to maintain a constant output voltage.

Notes: In a linear regulator, a series control device (such as a transistor) is operated in its linear region so its conduction changes to drop just enough voltage to keep the output constant. This active adjustment compensates for changes in input voltage or load current, which is why the output voltage remains steady in amateur radio equipment.

E7D02

Q: How does a switchmode voltage regulator work?

A: By varying the duty cycle of pulses input to a filter.

Notes: In a switchmode regulator, a transistor rapidly switches the input on and off and the duty cycle of these pulses is adjusted to control the average output voltage. A filter then smooths the pulsed waveform into a stable DC output suitable for amateur radio equipment.

E7D03

Q: What device is used as a stable voltage reference?

A: A Zener diode.

Notes: In amateur radio and other electronic circuits, a Zener diode is designed to maintain a nearly constant voltage over a range of currents when operated in reverse breakdown. This makes it well suited as a stable voltage reference for regulated power supplies and bias circuits in radio equipment.

E7D04

Q: Which of the following describes a three-terminal voltage regulator?

A: A series regulator.

Notes: A three-terminal voltage regulator operates by varying a series pass element to maintain a constant output voltage. In the Amateur Extra exam context, this configuration is identified as a series regulator because the regulating device is placed in series with the load and the input source.

E7D05

Q: Which of the following types of linear voltage regulator operates by loading the unregulated voltage source?

A: A shunt regulator.

Notes: In a shunt regulator, the regulating element is placed in parallel with the load and draws current to maintain a constant output voltage. This action effectively loads the unregulated source to stabilize the voltage for amateur radio circuits and equipment.

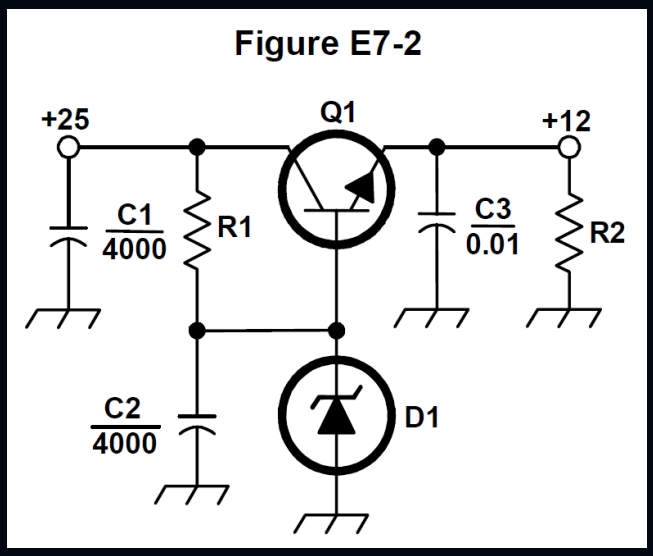

E7D06

Q: What is the purpose of Q1 in the circuit shown in Figure E7-2?

A: It controls the current to keep the output voltage constant.

Notes: Q1 functions as a series pass element whose conduction is regulated by the control circuitry so that variations in load current or input voltage do not change the output voltage. This current control action maintains a stable, constant output voltage, as required in a voltage regulator circuit on the Amateur Extra exam.

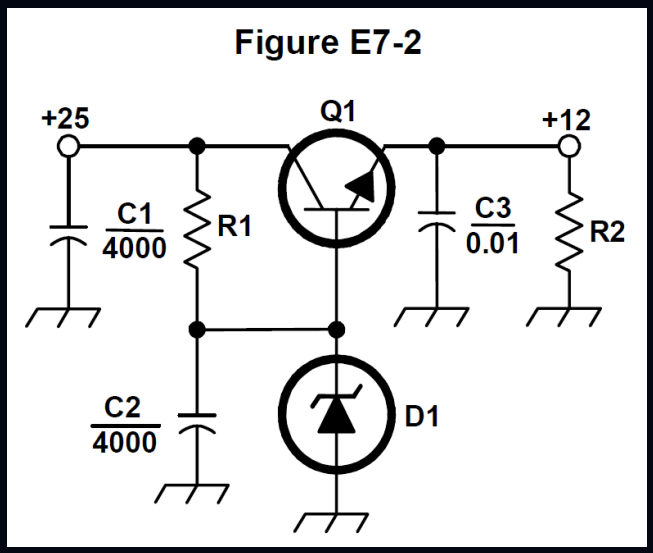

E7D07

Q: What is the purpose of C2 in the circuit shown in Figure E7-2?

A: It bypasses rectifier output ripple around D1.

Notes: Capacitor C2 provides a low-impedance path for the AC ripple component so that it is diverted around D1 instead of appearing at the DC output. This reduces ripple in the rectified supply used by the amateur radio circuit, improving voltage stability and performance.

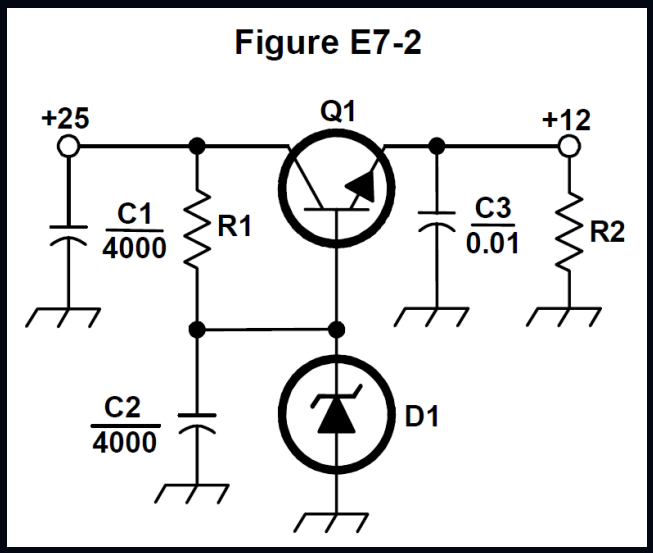

E7D08

Q: What type of circuit is shown in Figure E7-2?

A: Linear voltage regulator.

Notes: This circuit maintains a constant output voltage by using linear components to drop excess voltage as heat, which is characteristic of a linear voltage regulator. In the Amateur Extra exam context, recognizing this topology is important for understanding power supply design and regulation methods in radio equipment.

E7D09

Q: How is battery operating time calculated?

A: Capacity in amp-hours divided by average current.

Notes: In amateur radio calculations, battery life is estimated by taking the rated capacity in amp-hours and dividing it by the average current consumption in amperes. This gives the expected operating time in hours under the assumed load conditions.

E7D10

Q: Why is a switching type power supply less expensive and lighter than an equivalent linear power supply?

A: The high frequency inverter design uses much smaller transformers and filter components for an equivalent power output.

Notes: In a switching supply, converting power at high frequency greatly reduces the size and weight of transformers and filter components needed for the same output. Smaller magnetic and filter parts cost less and weigh less, which is why switching supplies are cheaper and lighter for equivalent power in amateur radio equipment.

E7D11

Q: What is the purpose of an inverter connected to a solar panel output?

A: Convert the panel's output from DC to AC.

Notes: Solar panels naturally generate DC, but most household equipment and typical amateur radio AC mains interfaces require AC. The inverter performs this DC-to-AC conversion so the solar power can be used with standard AC-powered systems and equipment.

E7D12

Q: What is the dropout voltage of a linear voltage regulator?

A: Minimum input-to-output voltage required to maintain regulation.

Notes: A linear regulator must have a certain minimum voltage difference between its input and output so it can operate in its active region and hold the output voltage constant. This minimum voltage difference is called the dropout voltage.

E7D13

Q: Which of the following calculates power dissipated by a series linear voltage regulator?

A: Voltage difference from input to output multiplied by output current.

Notes: A series linear regulator drops the excess voltage between input and output as heat while passing the load current. Therefore, its power dissipation is the voltage drop across the regulator times the current it supplies to the load.

E7D15

Q: What is the purpose of a step-start circuit in a high-voltage power supply?

A: To allow the filter capacitors to charge gradually.

Notes: A step-start circuit limits inrush current so the large filter capacitors do not draw a sudden surge when the supply is turned on. This gradual charging helps protect rectifiers, transformers, and other power supply components in high-voltage amateur radio equipment.

Group E7E - Modulators, demodulators, detectors, and mixers

E7E01

Q: Which of the following can be used to generate FM phone signals?

A: Reactance modulation of a local oscillator.

Notes: In reactance modulation, a circuit varies the reactance (capacitance or inductance) seen by a local oscillator to change its frequency in accordance with the audio signal, producing frequency modulation (FM). This method is commonly used in amateur radio transmitters to generate FM phone emissions for the Amateur Extra exam context.

E7E02

Q: What is the function of a reactance modulator?

A: Produce PM or FM signals by varying a capacitance.

Notes: By varying an effective capacitance in the tuned circuit, a reactance modulator changes the resonant frequency or phase of the RF signal, creating PM or FM. This method is commonly used in amateur radio transmitters to generate stable angle-modulated signals for the Amateur Extra exam context.

E7E03

Q: What is a frequency discriminator?

A: A circuit for detecting FM signals.

Notes: In FM receivers, a frequency discriminator converts the instantaneous frequency variations of the FM signal into corresponding amplitude variations, allowing the original modulating information to be recovered. This function is essential for demodulating frequency-modulated signals in amateur radio communications equipment.

E7E04

Q: What is one way to produce a single-sideband phone signal?

A: Use a balanced modulator followed by a filter.

Notes: In SSB generation, a balanced modulator suppresses the carrier and produces a double-sideband signal, and a filter then removes the unwanted sideband to leave a single-sideband phone signal. This method is a standard SSB generation technique used in amateur radio transmitters for efficient, narrowband voice communication.

E7E05

Q: What is added to an FM speech channel to boost the higher audio frequencies?

A: A pre-emphasis network.

Notes: In FM communication, a pre-emphasis network increases the level of higher audio frequencies before modulation to improve signal-to-noise performance. This is later complemented by de-emphasis in the receiver to restore the original audio response while reducing high-frequency noise, as tested on the Amateur Extra exam.

E7E06

Q: Why is de-emphasis used in FM communications receivers?

A: For compatibility with transmitters using phase modulation.

Notes: Phase-modulated transmitters use pre-emphasis to shape the audio, so FM receivers apply de-emphasis to restore a flat audio response. This complementary process ensures proper audio fidelity and standardized performance in FM communication systems.

E7E07

Q: What is meant by the term “baseband” in radio communications?

A: The frequency range occupied by a message signal prior to modulation.

Notes: Baseband refers to the original, unmodulated information signal and its range of frequencies before it is translated to a higher radio frequency for transmission. Understanding baseband is essential because modulation schemes operate on this original message signal to place it onto an RF carrier for communication.

E7E08

Q: What are the principal frequencies that appear at the output of a mixer?

A: The two input frequencies along with their sum and difference frequencies.

Notes: A mixer is a nonlinear device that produces new frequencies equal to the sum and difference of the original input signals while also passing the original input frequencies. In amateur radio equipment, these sum and difference products are used for frequency conversion such as in superheterodyne receivers and transmitters.

E7E09

Q: What occurs when the input signal levels to a mixer are too high?

A: Spurious mixer products are generated.

Notes: Excessive input levels drive the mixer into nonlinear operation, creating unwanted mixing products. These spurious signals can cause interference and degrade receiver or transmitter performance in amateur radio systems.

E7E10

Q: How does a diode envelope detector function?

A: By rectification and filtering of RF signals.

Notes: In an AM receiver, the diode envelope detector rectifies the RF signal to produce a unidirectional waveform and then filters it to recover the audio-frequency envelope. This process extracts the modulation information from the RF carrier for further amplification and listening.

E7E11

Q: Which type of detector is used for demodulating SSB signals?

A: Product detector.

Notes: A product detector mixes the incoming SSB signal with a beat-frequency oscillator (BFO) signal to reinsert the missing carrier and recover the original audio. This method provides proper demodulation and intelligible audio for single sideband reception in amateur radio equipment.

Group E7F - SDR basics, DSP, and data conversion

E7F01

Q: What is meant by “direct sampling” in software defined radios?

A: Incoming RF is digitized by an analog-to-digital converter without being mixed with a local oscillator signal.

Notes: In a direct sampling SDR, the antenna’s RF signal is converted straight into digital form at RF frequencies, eliminating the need for analog mixing stages. This allows the radio’s tuning and filtering to be performed primarily in software instead of using traditional superheterodyne circuitry.

E7F02

Q: What kind of digital signal processing audio filter is used to remove unwanted noise from a received SSB signal?

A: An adaptive filter.

Notes: Adaptive filters continuously adjust their response to the characteristics of the incoming signal and noise, allowing them to effectively reduce noise in SSB reception. In the Amateur Extra exam context, this identifies the specific DSP technique applied to clean up received audio.

E7F03

Q: What type of digital signal processing filter is used to generate an SSB signal?

A: A Hilbert-transform filter.

Notes: In DSP-based SSB generation, a Hilbert-transform filter produces a 90-degree phase shift required to separate and suppress one sideband. This phase-shift method enables clean SSB generation without needing analog filters for sideband selection.

E7F04

Q: Which method generates an SSB signal using digital signal processing?

A: Signals are combined in quadrature phase relationship.

Notes: In DSP-based SSB generation, two versions of the audio or baseband signal are processed 90 degrees out of phase (in quadrature) and then combined so that one sideband is reinforced while the other and the carrier are canceled. This quadrature technique digitally implements the phasing method of SSB generation used in modern transceivers.

E7F05

Q: How frequently must an analog signal be sampled to be accurately reproduced?

A: At least twice the rate of the highest frequency component of the signal.

Notes: This is the Nyquist sampling criterion, which ensures that all frequency components of the analog signal can be reconstructed without aliasing. In amateur radio digital systems, sampling at twice the highest audio or RF baseband frequency preserves the original signal information.

E7F06

Q: What is the minimum number of bits required to sample a signal with a range of 1 volt at a resolution of 1 millivolt?

A: 10 bits.

Notes: A 1-volt range with 1-millivolt resolution requires 1000 distinct steps, and 10 bits provide 2^10 = 1024 levels, which is sufficient. In Amateur Extra digital and DSP applications, bit depth must be high enough to cover the full voltage range at the desired resolution.

E7F07

Q: What function is performed by a Fast Fourier Transform?

A: Converting signals from the time domain to the frequency domain.

Notes: In amateur radio and signal processing, the Fast Fourier Transform (FFT) is an algorithm that efficiently analyzes how signal energy is distributed across different frequencies. This time-to-frequency conversion is fundamental for spectrum analysis, digital signal processing, and many modern radio applications tested on the Amateur Extra exam.

E7F08

Q: What is the function of decimation?

A: Reducing the effective sample rate by removing samples.

Notes: In digital signal processing for amateur radio, decimation reduces the data rate by systematically discarding samples while preserving the essential information in the signal. This lower effective sample rate eases processing requirements in receivers and other DSP-based systems.

E7F09

Q: Why is an anti-aliasing filter required in a decimator?

A: It removes high-frequency signal components that would otherwise be reproduced as lower frequency components.

Notes: When you decimate (reduce the sampling rate), any signal components above the new Nyquist frequency will fold back into the passband as false low-frequency signals (aliasing). The anti-aliasing filter prevents this by removing those high-frequency components before decimation in a DSP-based amateur radio system.

E7F10

Q: What aspect of receiver analog-to-digital conversion determines the maximum receive bandwidth of a direct-sampling software defined radio (SDR)?

A: Sample rate.

Notes: According to sampling theory, the analog-to-digital converter can only accurately represent signals up to a bandwidth related to its sample rate. A higher sample rate allows the SDR to process a wider slice of RF spectrum at once, setting the maximum receive bandwidth.

E7F11

Q: What sets the minimum detectable signal level for a direct-sampling software defined receiver in the absence of atmospheric or thermal noise?

A: Reference voltage level and sample width in bits.

Notes: In a direct-sampling SDR, the analog-to-digital converter (ADC) dynamic range is determined by its reference voltage and number of bits, which together define the smallest voltage step it can resolve. With no external noise present, this quantization limit sets the minimum detectable signal level for the receiver.

E7F12

Q: Which of the following is generally true of Finite Impulse Response (FIR) filters?

A: FIR filters can delay all frequency components of the signal by the same amount.

Notes: This property means an FIR filter can provide linear phase response, so all frequency components experience the same time delay. In Amateur Extra-level DSP applications, this preserves waveform shape, which is important for maintaining signal integrity in modulation and demodulation processes.

E7F13

Q: What is the function of taps in a digital signal processing filter?

A: Provide incremental signal delays for filter algorithms.

Notes: Each tap corresponds to a delayed version of the input signal that is individually weighted and summed to implement the desired filter characteristics. These incremental delays are essential to performing the mathematical convolution that defines the DSP filter's operation.

E7F14

Q: Which of the following would allow a digital signal processing filter to create a sharper filter response?

A: More taps.

Notes: In DSP, increasing the number of taps in a finite impulse response (FIR) filter improves its ability to more precisely shape the passband and stopband. This results in a steeper transition between wanted and unwanted frequencies, which is useful in Amateur Extra-level signal filtering applications.

Group E7G - Operational amplifier characteristics and uses

E7G01

Q: What is the typical output impedance of an op-amp?

A: Very low.

Notes: Op-amps are designed with internal feedback that makes their output behave like a low-impedance source so they can drive loads without significant voltage drop. This low output impedance is important for maintaining signal integrity in analog circuits used in amateur radio equipment.

E7G02

Q: What is the frequency response of the circuit in E7-3 if a capacitor is added across the feedback resistor?

A: Low-pass filter.

Notes: Placing a capacitor in parallel with the feedback resistor reduces the amplifier's gain at higher frequencies while maintaining gain at lower frequencies. This selective attenuation of higher frequencies creates a low-pass filter response in the circuit.

E7G03

Q: What is the typical input impedance of an op-amp?

A: Very high.

Notes: Op-amps are designed with very high input impedance so they draw negligible current from the preceding stage, minimizing loading effects in analog circuits. This characteristic is essential in many Amateur Extra–level applications, such as high-gain amplifiers and active filters, to preserve signal integrity.

E7G04

Q: What is meant by the term "op-amp input offset voltage"?

A: The differential input voltage needed to bring the open loop output voltage to zero.

Notes: In an ideal op-amp, zero volts at the differential input would produce zero output, but real devices require a small nonzero differential input to achieve zero output. This small required input difference is defined as the op-amp input offset voltage and is important in precision amateur radio circuitry where DC accuracy matters.

E7G05

Q: How can unwanted ringing and audio instability be prevented in an op-amp audio filter?

A: Restrict both gain and Q.

Notes: Limiting both the gain and the quality factor (Q) of the op-amp filter keeps the circuit's feedback and resonance under control. This prevents excessive peaking at the filter's center frequency, which reduces ringing and maintains stable audio operation in Amateur Extra–level designs.

E7G06

Q: What is the gain-bandwidth of an operational amplifier?

A: The frequency at which the open-loop gain of the amplifier equals one.

Notes: In op-amp design, the gain-bandwidth product is defined at the point where the amplifier's open-loop gain has fallen to unity (a gain of one). This parameter helps amateur radio designers predict how much gain an op-amp can provide at a given frequency in RF and audio circuits.

E7G07

Q: What voltage gain can be expected from the circuit in Figure E73 when R1 is 10 ohms and RF is 470 ohms?

A: 47.

Notes: In this op-amp configuration, the voltage gain is set by the feedback resistor divided by the input resistor, so the gain is 470 ohms ÷ 10 ohms = 47. This relationship is commonly used in amateur radio circuits to set precise amplifier gain values.

E7G08

Q: How does the gain of an ideal operational amplifier vary with frequency?

A: It does not vary with frequency.

Notes: By definition, an ideal operational amplifier has infinite, perfectly flat open-loop gain across all frequencies, so its gain is independent of frequency. This simplification is used in Extra-class exam questions to distinguish ideal op-amp theory from real-world device limitations.

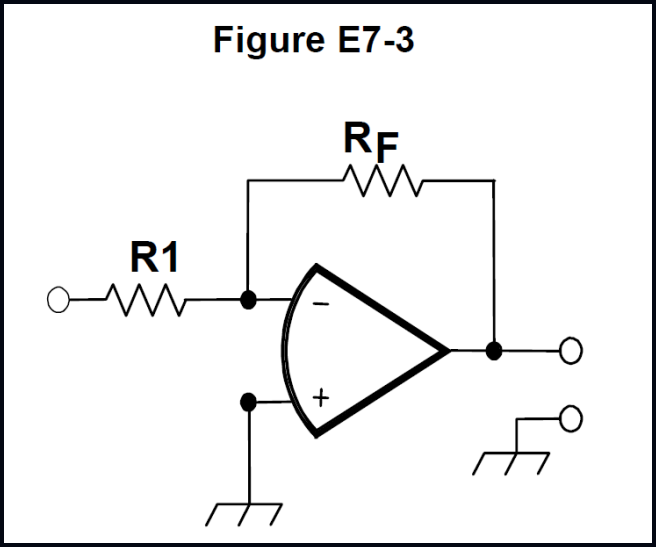

E7G09

Q: What will be the output voltage of the circuit shown in Figure E7-3 if R1 is 1,000 ohms, RF is 10,000 ohms, and 0.23 volts DC is applied to the input?

A: -2.3 volts.

Notes: An inverting op-amp's gain equals -RF/R1, so with RF = 10,000 ohms and R1 = 1,000 ohms the gain is -10. Multiplying the 0.23 volt DC input by this gain gives an output of -2.3 volts.

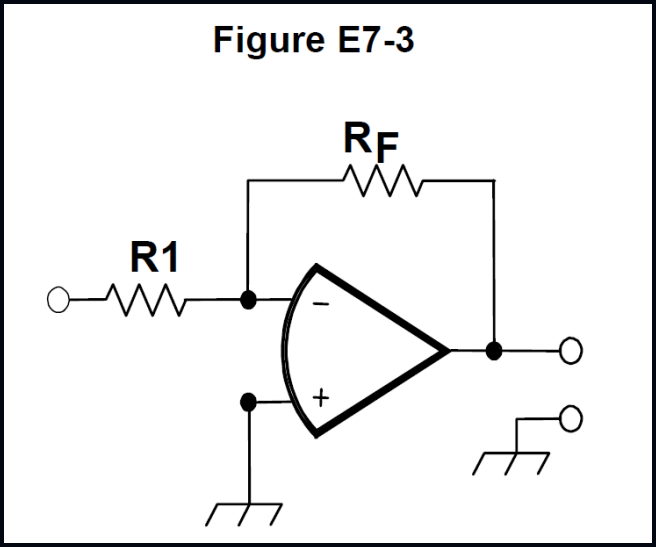

E7G10

Q: What absolute voltage gain can be expected from the circuit in Figure E7-3 when R1 is 1,800 ohms and RF is 68 kilohms?

A: 38.

Notes: In a typical inverting op-amp configuration, the absolute voltage gain is the feedback resistor RF divided by the input resistor R1, which here is 68,000 / 1,800 ≈ 38. This gain value indicates how many times the input signal voltage is amplified in magnitude by the circuit.

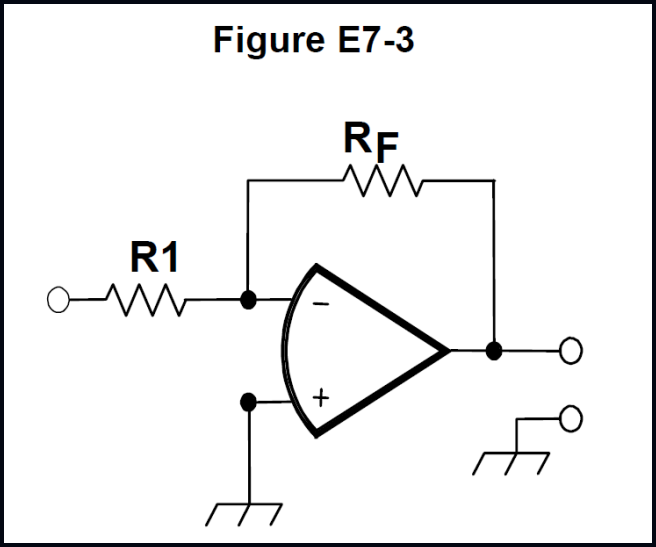

E7G11

Q: What absolute voltage gain can be expected from the circuit in Figure E7-3 when R1 is 3,300 ohms and RF is 47 kilohms?

A: 14.

Notes: In this op-amp configuration, the voltage gain is set by the feedback and input resistors according to the standard gain formula, which yields a value of 14 with R1 = 3,300 ohms and RF = 47 kilohms. This gain determines how much the input signal voltage is amplified at the output in the amateur radio circuit.

E7G12

Q: What is an operational amplifier?

A: A high-gain, direct-coupled differential amplifier with very high input impedance and very low output impedance.

Notes: This definition describes the key characteristics that allow an operational amplifier to amplify the difference between input signals while minimally loading the source and effectively driving the load. In amateur radio circuits, these properties make op-amps useful for precise signal conditioning, filtering, and amplification stages.

Group E7H - Oscillators, synthesizers, PLLs, and stability

E7H01

Q: What are three common oscillator circuits?

A: Colpitts, Hartley, and Pierce.

Notes: These three oscillator types are widely used because they provide stable, reliable RF signals and are standard designs in amateur and commercial equipment. Recognizing Colpitts, Hartley, and Pierce as common oscillators is part of the expected Extra-class exam knowledge of RF circuit building blocks.

E7H02

Q: What is a microphonic?

A: Changes in oscillator frequency caused by mechanical vibration.

Notes: In RF and audio circuits, especially oscillators, physical vibrations can modulate circuit elements and cause unwanted shifts in oscillator frequency, which is referred to as a microphonic effect. Recognizing this helps amateurs diagnose instability and unwanted modulation in sensitive radio equipment.

E7H03

Q: What is a phase-locked loop?

A: An electronic servo loop consisting of a phase detector, a low-pass filter, a voltage-controlled oscillator, and a stable reference oscillator.

Notes: In amateur radio equipment, a phase-locked loop is used to lock an oscillator to a stable reference by continuously comparing phase and correcting the oscillator frequency. The combination of a phase detector, low-pass filter, VCO, and reference oscillator provides accurate and stable frequency control needed for Extra-class level circuits.

E7H04

Q: How is positive feedback supplied in a Colpitts oscillator?

A: Through a capacitive divider.

Notes: The Colpitts oscillator uses a pair of capacitors in series as a capacitive divider to feed back a portion of the output signal to the active device input. This capacitive feedback network provides the correct phase and amplitude conditions for sustained RF oscillation in the circuit.

E7H05

Q: How is positive feedback supplied in a Pierce oscillator?

A: Through a quartz crystal.

Notes: A Pierce oscillator uses a quartz crystal in its feedback path so that the crystal's resonant characteristics both establish the oscillation frequency and provide the necessary positive feedback. This configuration ensures stable and accurate frequency control for amateur radio applications.

E7H06

Q: Which of these functions can be performed by a phase-locked loop?

A: Frequency synthesis and FM demodulation.

Notes: A phase-locked loop can generate stable, precise output frequencies locked to a reference for frequency synthesis, and it can track and extract frequency variations in an FM signal for FM demodulation. These capabilities make PLLs useful building blocks in many amateur radio transmitters and receivers.

E7H07

Q: How can an oscillator's microphonic responses be reduced?

A: Mechanically isolate the oscillator circuitry from its enclosure.

Notes: Mechanical isolation prevents vibrations and physical shocks from being transferred into the oscillator components, which would otherwise modulate the signal and cause microphonic effects. By decoupling the circuitry from the enclosure, the oscillator becomes less sensitive to external mechanical disturbances.

E7H08

Q: Which of the following components can be used to reduce thermal drift in crystal oscillators?

A: NP0 capacitors.

Notes: NP0 capacitors have a very low and stable temperature coefficient, so their capacitance remains nearly constant with temperature changes. This stability helps maintain a constant crystal oscillator frequency, reducing thermal drift in amateur radio equipment.

E7H09

Q: What type of frequency synthesizer circuit uses a phase accumulator, lookup table, digital-to-analog converter, and a low-pass anti-alias filter?

A: A direct digital synthesizer.

Notes: These specific digital building blocks are the hallmark of a direct digital synthesizer architecture used to generate precise RF signals. In the Amateur Extra exam context, recognizing this block diagram identifies the DDS as the correct synthesizer type.

E7H10

Q: What information is contained in the lookup table of a direct digital synthesizer (DDS)?

A: Amplitude values that represent the desired waveform.

Notes: A DDS creates signals by reading stored amplitude values from a digital lookup table and converting them to an analog waveform. These amplitude values define the exact shape of the RF signal produced, such as a sine wave for stable, low-noise frequency generation in amateur radio equipment.

E7H11

Q: What are the major spectral impurity components of direct digital synthesizers?

A: Spurious signals at discrete frequencies.

Notes: Direct digital synthesizers generate unwanted spurious outputs at specific, discrete frequencies due to quantization and non-idealities in the digital and conversion processes. These discrete spurs are the primary spectral impurity of DDS signals in amateur radio applications.

E7H12

Q: Which of the following ensures that a crystal oscillator operates on the frequency specified by the crystal manufacturer?

A: Provide the crystal with a specified parallel capacitance.

Notes: Crystal manufacturers specify a load, or parallel, capacitance at which the crystal will oscillate at its marked frequency. Matching this specified parallel capacitance in the oscillator circuit keeps the operating frequency at the intended value for accurate amateur radio operation.

E7H13

Q: Which of the following is a technique for providing highly accurate and stable oscillators needed for microwave transmission and reception?

A: All these choices are correct:
- Use a GPS signal reference
- Use a rubidium stabilized reference oscillator
- Use a temperature-controlled high Q dielectric resonator

Notes: Each listed method is an established way to obtain the frequency precision and stability required at microwave frequencies. Together, they represent common design techniques used in Amateur Extra-level microwave equipment and systems.

SUBELEMENT E8 - Signals, Modes, and Emissions

Group E8A - Fourier concepts, RMS, and RF power

E8A01

Q: What technique shows that a square wave is made up of a sine wave and its odd harmonics?

A: Fourier analysis.

Notes: In amateur radio theory, Fourier analysis is the mathematical technique used to decompose complex waveforms like square waves into sums of sinusoidal components. It demonstrates that a square wave consists of a fundamental sine wave plus its odd harmonic sine-wave components, which is important for understanding signal spectra and filtering.

E8A02

Q: Which of the following is a type of analog-to-digital conversion?

A: Successive approximation.

Notes: In the exam context, successive approximation refers to a common ADC technique that rapidly narrows down the digital value representing an analog input. It is widely used in communications equipment because it offers a good balance of speed, resolution, and complexity.

E8A03

Q: Which of the following describes a signal in the time domain?

A: Amplitude at different times.

Notes: Time-domain analysis looks at how the instantaneous amplitude of a signal changes over time. This is fundamental in amateur radio for understanding waveforms as they appear on instruments like oscilloscopes.

E8A04

Q: What is “dither” with respect to analog-to-digital converters?

A: A small amount of noise added to the input signal to reduce quantization noise.

Notes: Adding a controlled noise signal (dither) to the analog input decorrelates the quantization error from the signal, making quantization noise less audible or less objectionable. This improves the effective resolution and perceived fidelity of the digitized signal in amateur radio and other communications systems.

E8A05

Q: What is the benefit of making voltage measurements with a true-RMS calculating meter?

A: RMS is measured for both sinusoidal and non-sinusoidal signals.

Notes: In amateur radio work, many waveforms are not pure sine waves, so average-responding meters can give incorrect voltage readings. A true-RMS meter correctly measures the effective (heating) value of both sinusoidal and distorted or complex waveforms, which is essential for accurate power and signal measurements.

E8A06

Q: What is the approximate ratio of PEP-to-average power in an unprocessed single-sideband phone signal?

A: 2.5 to 1.

Notes: In an unprocessed SSB phone signal, the speech waveform causes the peak envelope power to be significantly higher than the long-term average power, resulting in a typical PEP-to-average power ratio of about 2.5 to 1. This ratio is important for correctly sizing and operating linear amplifiers and other RF stages under SSB voice conditions.

E8A07

Q: What determines the PEP-to-average power ratio of an unprocessed single-sideband phone signal?

A: Speech characteristics.

Notes: In an unprocessed SSB phone signal, the instantaneous peaks and average power levels follow the natural variations in human speech. Because of this, the inherent dynamics and waveform shape of the spoken audio directly set the ratio of PEP to average power for the signal.

E8A08

Q: Why are direct or flash conversion analog-to-digital converters used for a software defined radio?

A: Very high speed allows digitizing high frequencies.

Notes: Software defined radios require converting RF or IF signals directly into digital form, which demands very fast sampling. Flash ADCs provide the necessary high-speed conversion to accurately digitize these high-frequency signals for digital processing.

E8A09

Q: How many different input levels can be encoded by an analog-to-digital converter with 8-bit resolution?

A: 256.

Notes: An N-bit analog-to-digital converter can represent 2^N distinct levels, so 2^8 equals 256 for an 8-bit converter. In amateur radio, this determines how finely an analog signal, such as audio or IF, can be quantized for digital processing.

E8A10

Q: What is the purpose of a low-pass filter used at the output of a digital-to-analog converter?

A: Remove spurious sampling artifacts from the output signal.

Notes: Digital-to-analog converters produce unwanted high-frequency components due to the discrete sampling process. A low-pass filter passes only the desired baseband or signal bandwidth and attenuates these spurious sampling artifacts so the analog output is clean for communication use.

E8A11

Q: Which of the following is a measure of the quality of an analog-to-digital converter?

A: Total harmonic distortion.

Notes: Total harmonic distortion quantifies how much unwanted harmonic content is added to a signal by the conversion process, so lower distortion indicates a higher quality ADC. In Amateur Extra exam context, it is used as a key performance metric for evaluating how accurately an ADC preserves the original analog waveform.

Group E8B - Modulation methods, index, and multiplexing

E8B01

Q: What is the modulation index of an FM signal?

A: The ratio of frequency deviation to modulating signal frequency.

Notes: In FM, the modulation index quantifies how much the carrier frequency is shifted relative to the frequency of the audio or data signal causing the modulation. This ratio is fundamental for characterizing FM signals and determining their bandwidth in amateur radio systems.

E8B02

Q: How does the modulation index of a phase-modulated emission vary with RF carrier frequency?

A: It does not depend on the RF carrier frequency.

Notes: In phase modulation, the modulation index is determined by the peak phase deviation and the modulating signal, not by the RF carrier frequency. This means changing the carrier frequency does not change the modulation index for a given modulation condition in amateur radio systems.

E8B03

Q: What is the modulation index of an FM phone signal having a maximum frequency deviation of 3000 Hz either side of the carrier frequency if the highest modulating frequency is 1000 Hz?

A: 3.

Notes: In FM, the modulation index is the ratio of the maximum frequency deviation to the highest modulating frequency, so 3000 Hz ÷ 1000 Hz = 3. This describes how much the carrier frequency is deviated relative to the modulating audio frequency in amateur FM phone operation.

E8B04

Q: What is the modulation index of an FM phone signal having a maximum carrier deviation of plus or minus 6 kHz if the highest modulating frequency is 2 kHz?

A: 3.

Notes: For FM, the modulation index is the maximum frequency deviation divided by the highest modulating frequency, so 6 kHz ÷ 2 kHz = 3. This ratio helps describe how much the carrier frequency is shifted relative to the modulating audio frequency in amateur radio FM signals.

E8B05

Q: What is the deviation ratio of an FM phone signal having a maximum frequency swing of plus or minus 5 kHz if the highest modulation frequency is 3 kHz?

A: 1.67.

Notes: Deviation ratio is found by dividing the maximum frequency deviation by the highest modulating frequency, so 5 kHz ÷ 3 kHz = 1.67. This ratio helps characterize the spectral behavior of FM signals for proper bandwidth planning in amateur radio.

E8B06

Q: What is the deviation ratio of an FM phone signal having a maximum frequency swing of plus or minus 7.5 kHz if the highest modulation frequency is 3.5 kHz?

A: 2.14.

Notes: Deviation ratio is calculated by dividing the maximum frequency deviation by the highest modulating frequency, so 7.5 kHz ÷ 3.5 kHz ≈ 2.14. This ratio helps characterize the modulation index and bandwidth of an FM signal for Amateur Extra exam purposes.

E8B07

Q: Orthogonal frequency-division multiplexing (OFDM) is a technique used for which types of amateur communication?

A: Digital modes.

Notes: OFDM divides data across many closely spaced, orthogonal subcarriers and is inherently a digital modulation and multiplexing method. In the Amateur Extra exam context, it is associated with complex digital communication modes rather than analog operation.

E8B08

Q: What describes orthogonal frequency-division multiplexing (OFDM)?

A: A digital modulation technique using subcarriers at frequencies chosen to avoid intersymbol interference.

Notes: In OFDM, many closely spaced subcarriers are arranged so their spectra are mathematically orthogonal, which prevents overlapping symbols from interfering with each other. This orthogonality allows high data rates in channels subject to multipath and delay spread, minimizing intersymbol interference in amateur and other radio systems.

E8B09

Q: What is deviation ratio?

A: The ratio of the maximum carrier frequency deviation to the highest audio modulating frequency.

Notes: In frequency modulation, deviation ratio quantifies how much the carrier can deviate in frequency relative to the highest audio frequency used to modulate it. This ratio is important for characterizing FM system performance and bandwidth in amateur radio communications.

E8B10

Q: What is frequency division multiplexing (FDM)?

A: Dividing the transmitted signal into separate frequency bands that each carry a different data stream.

Notes: In amateur radio and other communications systems, FDM allows multiple independent signals to be sent simultaneously by assigning each one its own frequency band within a shared transmission channel. This increases channel efficiency while keeping the data streams separated in frequency so they do not interfere with each other.

E8B11

Q: What is digital time division multiplexing?

A: Two or more signals are arranged to share discrete time slots of a data transmission.

Notes: In digital TDM, each signal is assigned specific time slots in a repeating sequence, allowing multiple digital signals to be transmitted over a single channel. This is important in amateur radio and digital communication systems to efficiently share bandwidth among several data streams.

Group E8C - Digital modes, bandwidth, error coding, constellations

E8C01

Q: What is Quadrature Amplitude Modulation or QAM?

A: Transmission of data by modulating the amplitude of two carriers of the same frequency but 90 degrees out of phase.

Notes: In QAM, two orthogonal (90-degree phase-separated) carriers at the same frequency carry independent amplitude variations, allowing more information to be transmitted in the same bandwidth. This technique is widely used in advanced digital modulation schemes relevant to Amateur Extra class operations and modern communication systems.

E8C02

Q: What is the definition of symbol rate in a digital transmission?

A: The rate at which the waveform changes to convey information.

Notes: Each symbol corresponds to a distinct state of the transmitted waveform, so the symbol rate measures how often those states change per unit time. This determines how quickly information can be conveyed over the radio channel in digital modes.

E8C03

Q: Why should the phase of a PSK signal be changed at the zero crossing of the RF signal?

A: To minimize bandwidth.

Notes: Changing phase at the RF zero crossing reduces abrupt amplitude or phase transitions that would otherwise create unwanted sidebands. This smoother transition concentrates the signal energy in a narrower spectrum, minimizing bandwidth for Amateur Extra class operations.

E8C04

Q: What technique minimizes the bandwidth of a PSK31 signal?

A: Use of sinusoidal data pulses.

Notes: PSK31 uses shaped, sinusoidal data pulses to smooth phase transitions, which reduces abrupt changes that would otherwise create wider sidebands. This controlled shaping of the modulation envelope keeps the transmitted PSK31 signal very narrow in bandwidth for efficient HF operation.

E8C05

Q: What is the approximate bandwidth of a 13-WPM International Morse Code transmission?

A: 52 Hz.

Notes: A 13-WPM Morse code signal occupies a very narrow bandwidth, and standard approximations for CW keying rates and envelope shaping yield about 52 Hz of occupied spectrum. This value is used in the exam context to represent the typical bandwidth of a properly generated 13-WPM CW signal.

E8C06

Q: What is the bandwidth of an FT8 signal?

A: 50 Hz.

Notes: FT8 is a narrow-band digital mode specifically designed to fit many signals into a small frequency segment, so each FT8 signal occupies about 50 Hz of bandwidth. Knowing this helps operators plan frequency usage and avoid interference when operating FT8 on crowded bands.

E8C07

Q: What is the bandwidth of a 4,800-Hz frequency shift, 9,600-baud ASCII FM transmission?

A: 15.36 kHz.

Notes: For frequency-shift keyed (FSK) and similar ASCII FM signals, the occupied bandwidth is determined by both the keying (baud) rate and the frequency shift. Applying standard digital emission bandwidth formulas to a 9,600-baud signal with a 4,800-Hz shift yields an occupied bandwidth of 15.36 kHz, which is the value used for Amateur Extra exam purposes.

E8C08

Q: How does ARQ accomplish error correction?

A: If errors are detected, a retransmission is requested.

Notes: ARQ (Automatic Repeat reQuest) uses error detection to check received data and then requests a repeat transmission whenever an error is found. This ensures the final received data block is correct without needing complex forward error-correcting codes on every bit.

E8C09

Q: Which digital code allows only one bit to change between sequential code values?

A: Gray code.

Notes: Gray code is structured so that each adjacent code word differs by only one bit, which minimizes errors when transitioning between sequential digital values in radio and other digital systems. This property is useful in applications like digital encoders used with amateur radio equipment where reliable step-by-step transitions are important.

E8C10

Q: How can data rate be increased without increasing bandwidth?

A: Using a more efficient digital code.

Notes: More efficient digital coding transmits the same information using fewer symbols or bits per symbol, allowing a higher data rate within the same occupied bandwidth. In Amateur Extra class service, this principle is used to improve throughput while staying within FCC bandwidth limits.

E8C11

Q: What is the relationship between symbol rate and baud?

A: They are the same.

Notes: On the Amateur Extra exam, baud is defined as the symbol rate, so both terms describe the rate at which distinct signaling symbols are transmitted each second. This relationship is important when evaluating digital mode bandwidth and regulatory symbol rate limits.

E8C12

Q: What factors affect the bandwidth of a transmitted CW signal?

A: Keying speed and shape factor (rise and fall time).

Notes: Faster keying speeds and abrupt rise and fall times introduce more keying sidebands, increasing the CW signal’s occupied bandwidth. Smoother, longer rise and fall times reduce these sidebands and therefore reduce the bandwidth, which is important for spectrum efficiency and interference control in Amateur Extra operations.

E8C13

Q: What is described by the constellation diagram of a QAM or QPSK signal?

A: The possible phase and amplitude states for each symbol.

Notes: In digital modulation schemes like QAM and QPSK, each symbol corresponds to a specific combination of phase and amplitude. The constellation diagram plots these discrete phase-amplitude points, visually representing all symbol states the signal can take.

E8C14

Q: What type of addresses do nodes have in a mesh network?

A: Internet Protocol (IP).

Notes: Mesh network nodes use IP addresses so they can route data packets using standard Internet Protocol mechanisms. This allows amateur radio mesh networks to interoperate with common networking equipment and software that rely on IP addressing.

E8C15

Q: What technique do individual nodes use to form a mesh network?

A: Discovery and link establishment protocols.

Notes: In a mesh network, each node automatically discovers other nodes and establishes links with them using defined protocols, allowing the network to organize and maintain itself. This is important in amateur radio mesh systems where nodes may frequently join, leave, or move, requiring dynamic and automatic link management.

Group E8D - Digital keying defects, coding, and spread spectrum

E8D01

Q: Why are received spread spectrum signals resistant to interference?

A: Signals not using the spread spectrum algorithm are suppressed in the receiver.

Notes: A spread spectrum receiver uses a matching spreading algorithm to despread only the intended signal, which causes other signals that do not follow that algorithm to be greatly reduced. This selectivity makes the desired spread spectrum signal stand out from interference and noise in amateur radio communications.

E8D02

Q: What spread spectrum communications technique uses a high-speed binary bit stream to shift the phase of an RF carrier?

A: Direct sequence.

Notes: In direct sequence spread spectrum, the RF carrier phase is rapidly changed according to a pseudo-random binary code sequence, spreading the signal over a wider bandwidth. This technique improves resistance to interference and enhances signal security in amateur radio communications.

E8D03

Q: Which describes spread spectrum frequency hopping?

A: Rapidly varying the frequency of a transmitted signal according to a pseudorandom sequence.

Notes: In frequency-hopping spread spectrum, the transmitter quickly changes its operating frequency following a pseudorandom pattern known to both transmitter and receiver. This spreads the signal energy over many frequencies, improving interference resistance and making the transmission more difficult to intercept or jam in amateur radio applications.

E8D04

Q: What is the primary effect of extremely short rise or fall time on a CW signal?

A: The generation of key clicks.

Notes: Very abrupt on/off transitions in a CW signal create wide-band spectral components that are heard as key clicks. Properly shaping the keying envelope with longer rise and fall times reduces these clicks and limits interference to nearby frequencies.

E8D05

Q: What is the most common method of reducing key clicks?

A: Increase keying waveform rise and fall times.

Notes: Abrupt on/off keying creates wideband spectral splatter known as key clicks. Smoothing the keying envelope by increasing the rise and fall times reduces these clicks and limits transmitted bandwidth, as required for clean CW signals on the amateur bands.

E8D06

Q: What is the advantage of including parity bits in ASCII characters?

A: Some types of errors can be detected.

Notes: A parity bit adds simple error detection to each ASCII character by allowing the receiver to check whether the total number of 1 bits matches the expected parity. In amateur radio digital communications, this helps identify when data has been corrupted during transmission so it can be discarded or corrected by higher-level protocols.

E8D07

Q: What is a common cause of overmodulation of AFSK signals?

A: Excessive transmit audio levels.

Notes: In AFSK operation, the modem audio drives the transmitter to create the desired frequency shifts, and if the audio level is set too high, the signal becomes overmodulated and distorted. Proper adjustment of transmit audio gain keeps the modulation within the linear range of the transmitter for clean, decodable AFSK signals.

E8D08

Q: What parameter evaluates distortion of an AFSK signal caused by excessive input audio levels?

A: Intermodulation Distortion (IMD).

Notes: When the audio drive level in an AFSK transmission is too high, nonlinearities in the transmitter generate additional unwanted signal components that are quantified as intermodulation distortion. Measuring IMD indicates how badly the AFSK signal is being distorted by excessive audio input levels in the transmitter chain.

E8D09

Q: What is considered an acceptable maximum IMD level for an idling PSK signal?

A: -30 dB.

Notes: A maximum IMD level of -30 dB ensures that an idling PSK signal is clean enough to minimize interference and spectral splatter. This meets typical linearity and signal purity requirements expected for Amateur Extra class operation.

E8D10

Q: What are some of the differences between the Baudot digital code and ASCII?

A: Baudot uses 5 data bits per character, ASCII uses 7 or 8; Baudot uses 2 characters as letters/figures shift codes, ASCII has no letters/figures shift code.

Notes: On the exam, you should recognize that Baudot is an older 5-bit code that relies on special shift characters to switch between letters and figures, unlike ASCII. ASCII was designed with more bits per character so it can directly represent letters, numbers, and symbols without any separate shift code.

E8D11

Q: What is one advantage of using ASCII code for data communications?

A: It is possible to transmit both uppercase and lowercase text.

Notes: ASCII is a standardized character encoding that defines distinct codes for both uppercase and lowercase letters, allowing full case-sensitive text to be sent over radio links. This supports clearer, more accurate data communication in amateur radio digital modes.

SUBELEMENT E9 - Antennas and Feed Lines

Group E9A - Antenna gain, efficiency, and radiated power

E9A01

Q: What is an isotropic radiator?

A: A hypothetical, lossless antenna having equal radiation intensity in all directions used as a reference for antenna gain.

Notes: In amateur radio and antenna engineering, gain values such as dBi are defined relative to an ideal isotropic radiator that radiates uniformly in all directions without loss. This provides a standard reference so different real antennas can be compared consistently for the Amateur Extra exam and in practical design work.

E9A02

Q: What is the effective radiated power (ERP) of a repeater station with 150 watts transmitter power output, 2 dB feed line loss, 2.2 dB duplexer loss, and 7 dBd antenna gain?

A: 286 watts.

Notes: ERP is calculated by subtracting the system losses in dB from the transmitter power, adding the antenna gain in dB, and then converting the resulting dB value back to watts, which yields 286 watts in this case. This shows how real-world system losses and antenna gain change the actual radiated power compared to the transmitter output rating.

E9A03

Q: What term describing total radiated power takes into account all gains and losses?

A: Effective radiated power.

Notes: Effective radiated power (ERP) is the calculated transmitter output power after including antenna gain and system losses, expressed as the equivalent power that would be radiated by a reference antenna. In the Amateur Extra exam context, ERP is used to compare actual station radiation to a standard reference to ensure compliance with power and exposure limits.

E9A04

Q: Which of the following factors affect the feed point impedance of an antenna?

A: Antenna height.

Notes: The distance of the antenna above ground changes the current and voltage distribution along the antenna, which directly changes its feed point impedance. In Extra-class exam context, knowing that physical placement, including height, alters impedance is essential for proper antenna matching and system design.

E9A05

Q: What does the term “ground gain” mean?

A: An increase in signal strength from ground reflections in the environment of the antenna.

Notes: Nearby ground and terrain can reflect radio waves so they combine constructively with the direct signal from the antenna, raising the received signal strength. This effect is called ground gain and is important in antenna siting and pattern analysis for the Amateur Extra exam.

E9A06

Q: What is the effective radiated power (ERP) of a repeater station with 200 watts transmitter power output, 4 dB feed line loss, 3.2 dB duplexer loss, 0.8 dB circulator loss, and 10 dBd antenna gain?

A: 317 watts.

Notes: ERP is found by subtracting all system losses in dB from the transmitter power, adding the antenna gain in dB, and converting the resulting net dB value back to watts, which yields 317 watts. This reflects the equivalent power a reference dipole would need to radiate the same signal strength in the favored direction.

E9A07

Q: What is the effective isotropic radiated power (EIRP) of a repeater station with 200 watts transmitter power output, 2 dB feed line loss, 2.8 dB duplexer loss, 1.2 dB circulator loss, and 7 dBi antenna gain?

A: 252 watts.

Notes: Convert all gains and losses to dB, add the losses and subtract from the sum of the transmitter power in dBW and the antenna gain, then convert the resulting dBW value back to watts. This calculation yields an EIRP of 252 watts.

E9A08

Q: Which frequency band has the smallest first Fresnel zone?

A: 5.8 GHz.

Notes: The diameter of the first Fresnel zone decreases as frequency increases, so the highest frequency listed, 5.8 GHz, produces the smallest first Fresnel zone. This is important in microwave path planning because higher frequencies allow tighter clearance over terrain and obstacles for a given path length.

E9A09

Q: What is antenna efficiency?

A: Radiation resistance divided by total resistance.

Notes: In amateur radio, antenna efficiency expresses how much of the power supplied to the antenna is converted into radiated RF energy instead of being lost as heat, so it is calculated as the ratio of radiation resistance to total resistance. This relationship helps operators compare how effectively different antennas radiate their input power.

E9A10

Q: Which of the following improves the efficiency of a ground-mounted quarter-wave vertical antenna?

A: Installing a ground radial system.

Notes: A ground radial system provides a low-resistance return path for RF currents, reducing ground losses. This improves radiation efficiency and overall performance of a quarter-wave vertical antenna used in amateur radio.

E9A11

Q: Which of the following determines ground losses for a ground-mounted vertical antenna operating on HF?

A: Soil conductivity.

Notes: Ground losses for HF vertical antennas are caused by resistance in the earth, which is directly related to soil conductivity. Higher soil conductivity reduces resistive losses and improves antenna efficiency.

E9A12

Q: How much gain does an antenna have compared to a half-wavelength dipole if it has 6 dB gain over an isotropic radiator?

A: 3.85 dB.

Notes: A half-wavelength dipole has 2.15 dB gain over an isotropic radiator, so subtracting 2.15 dB from 6 dB gives 3.85 dB gain relative to the dipole. This conversion between dBi (isotropic) and dBd (dipole) is a standard relationship used in antenna gain calculations on the Amateur Extra exam.

Group E9B - Antenna patterns, gain, and modeling

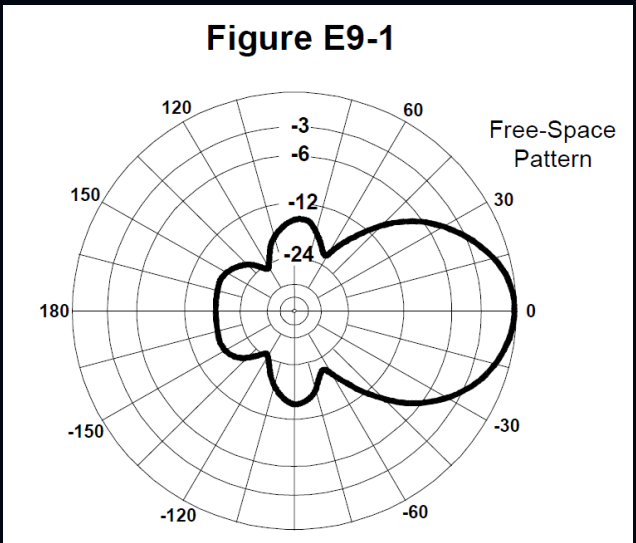

E9B01

Q: What is the 3 dB beamwidth of the antenna radiation pattern shown in Figure E9-1?

A: 50 degrees.

Notes: The 3 dB beamwidth is measured between the points on the main lobe where the power falls to half (3 dB down) from the maximum. Reading those half-power points from the polar plot in Figure E9-1 yields a beamwidth of 50 degrees.

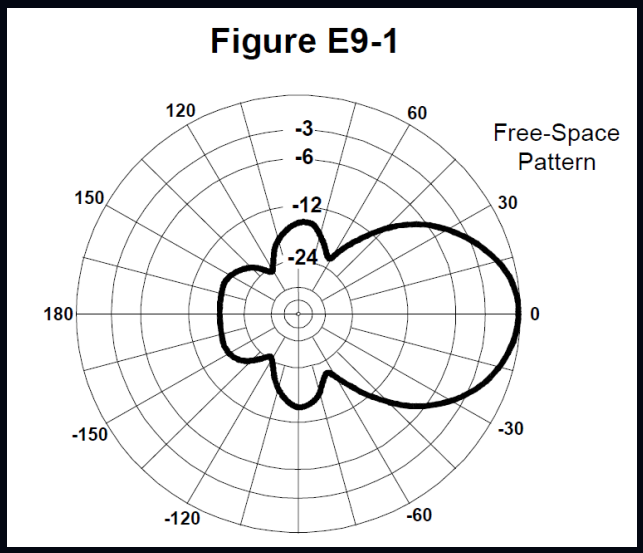

E9B02

Q: What is the front-to-back ratio of the antenna radiation pattern shown in Figure E9-1?

A: 18 dB.

Notes: Front-to-back ratio is the difference in signal strength between the main lobe (front) and the opposite direction (back) on a radiation pattern plot. Reading the plotted gain values for the main forward lobe and the directly opposite direction in Figure E9-1 yields a front-to-back ratio of 18 dB.

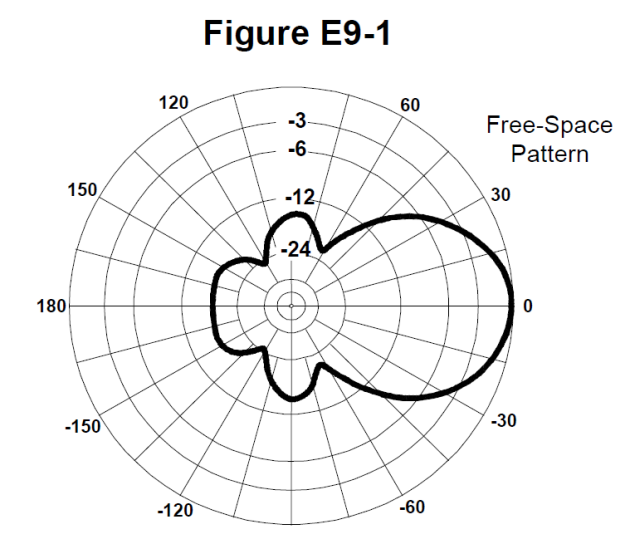

E9B03

Q: What is the front-to-side ratio of the antenna radiation pattern shown in Figure E9-1?

A: 14 dB.

Notes: On the polar radiation pattern, the difference in signal level between the main forward lobe and the side lobe is measured as 14 dB. This value represents how much stronger the antenna radiates in the forward direction compared to the side direction, which is the front-to-side ratio used in antenna performance evaluation on the Amateur Extra exam.

E9B04

Q: What is the front-to-back ratio of the radiation pattern shown in Figure E92?

A: 28 dB.

Notes: Front-to-back ratio is the difference in signal strength, in decibels, between the main forward lobe and the directly opposite direction on a directional antenna pattern. Reading the plotted values on the polar radiation pattern in Figure E9-2 gives a front-to-back ratio of 28 dB.

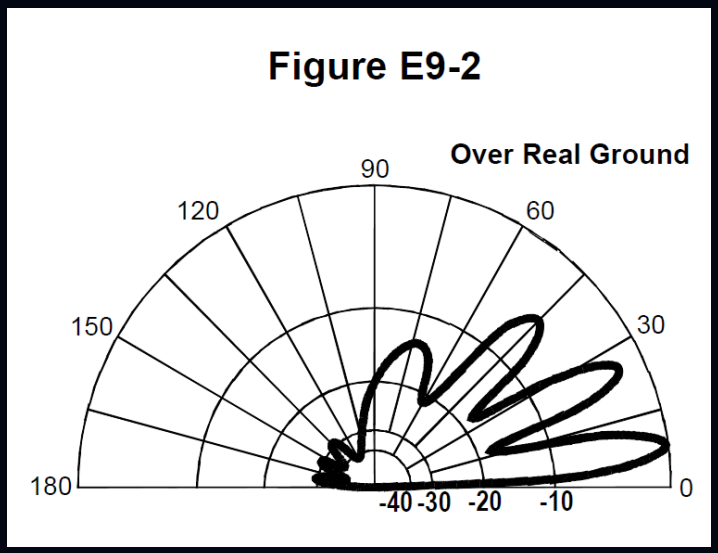

E9B05

Q: What type of antenna pattern is shown in Figure E9-2?

A: Elevation.

Notes: An elevation pattern shows how an antenna radiates signal strength at different vertical angles above the horizon. In the Amateur Extra exam context, recognizing an elevation pattern is important for understanding takeoff angles and optimizing long-distance HF communication.

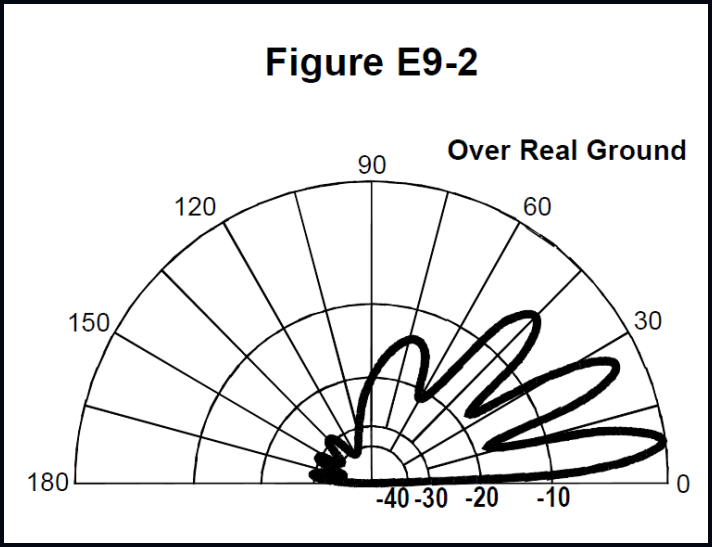

E9B06

Q: What is the elevation angle of peak response in the antenna radiation pattern shown in Figure E9-2?

A: 7.5 degrees.

Notes: The main lobe of the radiation pattern in Figure E9-2 reaches its maximum field strength at an elevation angle of 7.5 degrees. This angle represents the direction in which the antenna radiates the strongest signal above the horizon, which is important for optimizing long-distance HF communication paths.

E9B07

Q: What is the difference in radiated power between a lossless antenna with gain and an isotropic radiator driven by the same power?

A: They are the same.

Notes: Antenna gain describes the directional concentration of radiated power, not an increase in total power radiated. For a lossless antenna, the total radiated power equals the input power, just as with an ideal isotropic radiator driven by the same power.

E9B08

Q: What is the far field of an antenna?

A: The region where the shape of the radiation pattern no longer varies with distance.

Notes: In the far field, the radiated electromagnetic waves have stabilized so that the directional pattern is effectively fixed and does not change shape as you move farther away. This concept is important in amateur radio because antenna patterns and performance are defined and measured in this region for consistency and accuracy.

E9B09

Q: What type of analysis is commonly used for modeling antennas?

A: Method of Moments.

Notes: In the Amateur Extra exam context, antenna modeling typically relies on numerical electromagnetic techniques, and the Method of Moments is the standard computational method used in many antenna modeling software tools. It allows accurate prediction of antenna performance by solving integral equations for current distributions on conductors.

E9B10

Q: What is the principle of a Method of Moments analysis?

A: A wire is modeled as a series of segments, each having a uniform value of current.

Notes: Method of Moments antenna modeling treats the wire as many small segments so the current can be assumed constant on each segment. This segmentation allows numerical solution of the current distribution and resulting radiation for complex wire antennas in Amateur Extra level analysis.

E9B11

Q: What is a disadvantage of decreasing the number of wire segments in an antenna model below 10 segments per half-wavelength?

A: The computed feed point impedance may be incorrect.

Notes: Antenna modeling software approximates currents and voltages along each wire segment, so too few segments per half-wavelength reduce accuracy. This can cause the calculated feed point impedance to differ significantly from the antenna’s actual impedance, leading to design and matching errors on the air.

Group E9C - Wire antennas, arrays, and ground effects

E9C01

Q: What type of radiation pattern is created by two 1/4-wavelength vertical antennas spaced 1/2-wavelength apart and fed 180 degrees out of phase?

A: A figure-eight oriented along the axis of the array.

Notes: Out-of-phase feeding of two verticals spaced 1/2-wavelength apart causes cancellation broadside to the array and reinforcement along its line, forming a figure-eight pattern along the array axis. This is a classic end-fire array configuration used to achieve directional gain in opposite directions along the antenna line.

E9C02

Q: What type of radiation pattern is created by two 1/4-wavelength vertical antennas spaced 1/4-wavelength apart and fed 90 degrees out of phase?

A: Cardioid.

Notes: Feeding the two closely spaced verticals 90 degrees out of phase creates constructive interference in one main direction and destructive interference in the opposite direction, forming a cardioid pattern. This pattern is useful in amateur radio for directional coverage and front-to-back discrimination.

E9C03

Q: What type of radiation pattern is created by two 1/4-wavelength vertical antennas spaced 1/2-wavelength apart and fed in phase?

A: A figure-eight broadside to the axis of the array.

Notes: Feeding two closely spaced verticals in phase causes their fields to add most strongly in the directions perpendicular to the line between them, forming a figure-eight pattern broadside to the array. This is a basic broadside array configuration used to increase gain in two opposite directions at right angles to the antenna line.

E9C04

Q: What happens to the radiation pattern of an unterminated long wire antenna as the wire length is increased?

A: Additional lobes form with major lobes increasingly aligned with the axis of the antenna.

Notes: A longer unterminated long wire antenna supports more current maxima along its length, which creates more lobes in the radiation pattern. As the wire grows longer in wavelengths, the strongest radiation shifts so that the major lobes increasingly align with the axis of the wire, a behavior important in directional HF antenna design for the Amateur Extra exam.

E9C05

Q: What is the purpose of feeding an off-center-fed dipole (OCFD) between the center and one end instead of at the midpoint?

A: To create a similar feed point impedance on multiple bands.

Notes: By moving the feed point off center, the antenna's current distribution produces comparable feed point impedances at several harmonic frequencies. This allows one OCFD to operate efficiently on multiple amateur bands using a single feed line and matching system.

E9C06

Q: What is the effect of adding a terminating resistor to a rhombic or long-wire antenna?

A: It changes the radiation pattern from bidirectional to unidirectional.

Notes: With a terminating resistor, energy that would otherwise be reflected back and form a reverse lobe is absorbed, so the antenna primarily radiates in one direction. This unidirectional pattern is useful in Amateur Extra level applications where a stronger signal is desired toward a specific distant region.

E9C07

Q: What is the approximate feed point impedance at the center of a two-wire half-wave folded dipole antenna?

A: 300 ohms.

Notes: A two-wire half-wave folded dipole has about four times the feed point impedance of a standard half-wave dipole, giving approximately 300 ohms. This higher impedance is a characteristic result of the current distribution and parallel conductor arrangement in folded dipoles used in amateur radio antennas.

E9C08

Q: What is a folded dipole antenna?

A: A half-wave dipole with an additional parallel wire connecting its two ends.

Notes: On the exam, a folded dipole is defined as a standard half-wave dipole whose two ends are joined by an added parallel conductor, forming a closed loop-like structure. This configuration changes the feed-point impedance and bandwidth characteristics while remaining a half-wave radiator.

E9C09

Q: Which of the following describes a G5RV antenna?

A: A wire antenna center-fed through a specific length of open-wire line connected to a balun and coaxial feed line.

Notes: The G5RV is a multiband HF wire antenna that uses a precisely chosen length of open-wire matching section between the center of the wire and a balun that transitions to coaxial cable. This configuration provides impedance matching over several HF bands for Amateur Extra class operation.

E9C10

Q: Which of the following describes a Zepp antenna?

A: An end-fed half-wavelength dipole.

Notes: A Zepp antenna is constructed as a half-wavelength dipole that is fed at one end instead of at the center. This end-fed configuration was originally used on airships (Zeppelins), giving the antenna its name in amateur radio practice.

E9C11

Q: How is the far-field elevation pattern of a vertically polarized antenna affected by being mounted over seawater versus soil?

A: Radiation at low angles increases.

Notes: Seawater is a very good RF conductor, so it enhances ground reflection and improves efficiency for low-angle radiation. This results in stronger low-angle signals, which are especially useful for long-distance HF communication paths tested on the Amateur Extra exam.

E9C12

Q: Which of the following describes an extended double Zepp antenna?

A: A center-fed 1.25-wavelength dipole antenna.

Notes: On the Amateur Extra exam, the extended double Zepp is defined as a dipole whose total length is 1.25 wavelengths and is fed at the center. This increased electrical length compared to a half-wave dipole provides additional gain in the main lobes of the radiation pattern along the wire’s axis.

E9C13

Q: How does the radiation pattern of a horizontally polarized antenna vary with increasing height above ground?

A: The takeoff angle of the lowest elevation lobe decreases.

Notes: Raising a horizontally polarized antenna farther above ground causes its main radiation lobe to shift closer to the horizon, lowering the takeoff angle. This behavior is important for optimizing long-distance HF communication where low-angle radiation is desired.

E9C14

Q: How does the radiation pattern of a horizontally-polarized antenna mounted above a long slope compare with the same antenna mounted above flat ground?

A: The main lobe takeoff angle decreases in the downhill direction.

Notes: The sloping terrain effectively increases the height of the antenna relative to the ground in the downhill direction, which lowers the radiation takeoff angle that is most useful for longer-distance HF communication. This terrain effect alters the radiation pattern even though the antenna itself is unchanged.

Group E9D - Yagis, dishes, short antennas, and grounding

E9D01

Q: How much does the gain of an ideal parabolic reflector antenna increase when the operating frequency is doubled?

A: 6 dB.

Notes: For an ideal parabolic reflector with fixed physical size, gain is proportional to the square of frequency. Doubling the frequency therefore results in a 4:1 power gain ratio, which corresponds to a 6 dB increase in gain in decibels ($10 \cdot \log10(4) \approx 6$ dB).

E9D02

Q: How can two linearly polarized Yagi antennas be used to produce circular polarization?

A: Arrange two Yagis on the same axis and perpendicular to each other with the driven elements at the same point on the boom and fed 90 degrees out of phase.

Notes: Circular polarization is created when two orthogonal linear fields of equal amplitude are combined with a 90-degree phase difference. Mounting the Yagis at right angles on the same boom point and feeding them 90 degrees out of phase provides the required orthogonal fields and phase relationship for circular polarization in amateur radio applications.

E9D03

Q: What is the most efficient location for a loading coil on an electrically short whip?

A: Near the center of the vertical radiator.

Notes: Placing the loading coil near the center of the vertical radiator provides a better current distribution along the antenna, improving radiation efficiency for an electrically short whip. This configuration reduces losses compared to loading at less optimal points along the antenna.

E9D04

Q: Why should antenna loading coils have a high ratio of reactance to resistance?

A: To maximize efficiency.

Notes: A high reactance-to-resistance ratio in a loading coil means less power is lost as heat in the coil and more power is radiated by the antenna. This improves the overall efficiency of the loaded antenna system, which is important in amateur radio operation.

E9D05

Q: Approximately how long is a Yagi's driven element?

A: 1/2 wavelength.

Notes: In a typical Yagi antenna used for amateur radio, the driven element is resonant at the operating frequency and is therefore made about one-half wavelength long. This length provides efficient radiation and reception while allowing proper coupling to the other elements in the array.

E9D06

Q: What happens to SWR bandwidth when one or more loading coils are used to resonate an electrically short antenna?

A: It is decreased.

Notes: Loading coils increase the antenna's Q, which narrows the range of frequencies over which it remains well matched. As a result, the standing wave ratio stays low over a smaller bandwidth.

E9D07

Q: What is an advantage of top loading an electrically short HF vertical antenna?

A: Improved radiation efficiency.

Notes: Top loading increases the effective electrical length of a short vertical, allowing it to radiate more efficiently. This improves the antenna's ability to convert transmitter power into radiated RF energy on HF bands.

E9D08

Q: What happens as the Q of an antenna increases?

A: SWR bandwidth decreases.

Notes: Higher Q means the antenna system is more selective and resonates over a narrower range of frequencies. This increased selectivity causes the frequency range over which the SWR remains acceptably low (the SWR bandwidth) to become smaller.

E9D09

Q: What is the function of a loading coil in an electrically short antenna?

A: To resonate the antenna by cancelling the capacitive reactance.

Notes: An electrically short antenna has capacitive reactance that prevents it from being resonant at the desired frequency. A loading coil adds inductive reactance that cancels this capacitive reactance, bringing the antenna to resonance for more efficient operation.

E9D10

Q: How does radiation resistance of a base-fed whip antenna change below its resonant frequency?

A: Radiation resistance decreases.

Notes: At frequencies below resonance, the whip antenna becomes electrically shorter relative to the wavelength, which reduces its radiation resistance and makes it less efficient at radiating power. This behavior is a key consideration when tuning antennas for maximum radiation at the desired operating frequency.

E9D11

Q: Why do most two-element Yagis with normal spacing have a reflector instead of a director?

A: Higher gain.

Notes: In a typical two-element Yagi with standard spacing, making the parasitic element a reflector maximizes the forward gain of the antenna. This higher gain improves signal strength and overall performance for amateur radio communications.

E9D12

Q: What is the purpose of making a Yagi's parasitic elements either longer or shorter than resonance?

A: Control of phase shift.

Notes: Adjusting the length of parasitic elements away from exact resonance changes their reactance, which in turn shifts the phase of the currents in those elements. This controlled phase shift is essential for forming the Yagi antenna's directional radiation pattern used in amateur radio.

Group E9E - Antenna impedance matching, phasing, and dividers

E9E01

Q: Which matching system for Yagi antennas requires the driven element to be insulated from the boom?

A: Beta or hairpin.

Notes: In a beta or hairpin match, the driven element must be electrically isolated from the boom so the matching network can properly adjust the feedpoint impedance. This isolation ensures the match functions as designed to transform the antenna's impedance to 50 ohms for the transmitter and feed line used in Amateur Extra operations.

E9E02

Q: What antenna matching system matches coaxial cable to an antenna by connecting the shield to the center of the antenna and the conductor a fraction of a wavelength to one side?

A: Gamma match.

Notes: In amateur radio, the gamma match is specifically designed to feed an unbalanced coaxial line to a usually balanced antenna by tapping the driven element a fraction of a wavelength from its center. This configuration provides impedance transformation and matching without requiring a split driven element.

E9E03

Q: What matching system uses a short length of transmission line connected in parallel with the feed line at or near the feed point?

A: Stub match.

Notes: In amateur radio, a stub match uses a short section of transmission line (the stub) in parallel with the main feed line to cancel unwanted reactance at the antenna feed point. This provides an impedance match between the feed line and antenna for efficient power transfer and reduced SWR.

E9E04

Q: What is the purpose of the series capacitor in a gamma match?

A: To cancel unwanted inductive reactance.

Notes: The gamma match introduces inductive reactance that must be neutralized for efficient power transfer. The series capacitor provides equal and opposite reactance, bringing the system to a near purely resistive impedance at the operating frequency.

E9E05

Q: What Yagi driven element feed point impedance is required to use a beta or hairpin matching system?

A: Capacitive (driven element electrically shorter than 1/2 wavelength).

Notes: Beta or hairpin matching uses an inductive reactance to cancel the capacitive reactance of a driven element that is electrically shorter than 1/2 wavelength. This brings the feed point impedance to a resistive value suitable for standard transmission lines in typical Amateur Extra Yagi designs.

E9E06

Q: Which of these transmission line impedances would be suitable for constructing a quarter-wave Q-section for matching a 100-ohm feed point impedance to a 50-ohm transmission line?

A: 75 ohms.

Notes: For a quarter-wave transformer, the required characteristic impedance is the square root of the product of the two impedances being matched, and the square root of (100 ohms × 50 ohms) is 75 ohms. Using a 75-ohm line as a quarter-wave section will therefore match a 100-ohm load to a 50-ohm system in this application.

E9E07

Q: What parameter describes the interaction of a load and transmission line?

A: Reflection coefficient.

Notes: The reflection coefficient quantifies how much of the signal is reflected back from the load due to impedance mismatch on a transmission line. In Amateur Extra exam context, it is the standard parameter used to describe the load-line interaction in terms of reflected versus incident power or voltage.

E9E08

Q: What is a use for a Wilkinson divider?

A: To divide power equally between two 50-ohm loads while maintaining 50-ohm input impedance.

Notes: In amateur radio and RF design, a Wilkinson divider is a specialized power divider network that splits input power evenly into two matched 50-ohm outputs. Its design ensures the input still sees a 50-ohm impedance, which is important for proper system matching and minimizing reflections in 50-ohm systems.

E9E11

Q: What is the purpose of using multiple driven elements connected through phasing lines?

A: To control the antenna’s radiation pattern.

Notes: By feeding multiple driven elements with specific phase relationships via phasing lines, the combined fields reinforce or cancel in chosen directions, shaping the radiation pattern. This technique lets amateurs direct more signal where it is needed and reduce radiation in unwanted directions, improving station performance under FCC Amateur Extra privileges.

Group E9F - Transmission line types, loss, and velocity factor

E9F01

Q: What is the velocity factor of a transmission line?

A: The velocity of a wave in the transmission line divided by the velocity of light in a vacuum.

Notes: Velocity factor expresses how fast RF energy travels in a given transmission line compared to the speed of light in a vacuum. It is used in amateur radio to calculate physical lengths of feed lines and matching stubs for a desired electrical length.

E9F02

Q: Which of the following has the biggest effect on the velocity factor of a transmission line?

A: The insulating dielectric material.

Notes: Velocity factor depends primarily on how the dielectric material between the conductors alters the speed of the electromagnetic wave compared to its speed in free space. Different insulating materials change the line's effective permittivity, which directly sets the velocity factor used in antenna and feed line design calculations on the Amateur Extra exam.

E9F03

Q: Why is the electrical length of a coaxial cable longer than its physical length?

A: Electromagnetic waves move more slowly in a coaxial cable than in air.

Notes: The dielectric material inside a coaxial cable reduces the wave propagation speed below the speed of radio waves in air or free space, which makes a given physical length correspond to a greater electrical length in terms of wavelength and phase. In antenna and transmission line calculations for the Amateur Extra exam, this slower velocity must be considered when determining resonant lengths and matching sections.

E9F04

Q: What impedance does a 1/2-wavelength transmission line present to an RF generator when the line is shorted at the far end?

A: Very low impedance.

Notes: A lossless transmission line one-half wavelength long repeats the load impedance at its input. Since a short circuit is a very low impedance, the input also appears as a very low impedance to the RF generator.

E9F05

Q: What is microstrip?

A: Precision printed circuit conductors above a ground plane that provide constant impedance interconnects at microwave frequencies.

Notes: In the Amateur Extra exam context, microstrip refers to a specific transmission line structure on a printed circuit board that maintains a controlled impedance. It is widely used at microwave frequencies for predictable signal behavior and minimal reflections in RF circuits.

E9F06

Q: What is the approximate physical length of an air-insulated, parallel conductor transmission line that is electrically 1/2 wavelength long at 14.10 MHz?

A: 10.6 meters.

Notes: For an air-insulated parallel conductor transmission line, the physical length is very close to the free-space half-wavelength at the operating frequency. At 14.10 MHz, this corresponds to approximately 10.6 meters for a 1/2-wavelength line section.

E9F07

Q: How does parallel conductor transmission line compare to coaxial cable with a plastic dielectric?

A: Lower loss.

Notes: Parallel conductor line operates with lower dielectric and conductor losses than typical plastic-dielectric coaxial cable, resulting in reduced signal attenuation. This makes it more efficient for carrying RF signals over a given distance, especially at higher frequencies or longer runs.

E9F08

Q: Which of the following is a significant difference between foam dielectric coaxial cable and solid dielectric coaxial cable, assuming all other parameters are the same?

A: All these choices are correct:
- Foam dielectric coaxial cable has lower safe maximum operating voltage
- Foam dielectric coaxial cable has lower loss per unit of length
- Foam dielectric coaxial cable has higher velocity factor

Notes: Foam dielectric construction changes how RF energy propagates in the cable, affecting velocity factor, attenuation, and power-handling. On the Amateur Extra exam, this means all stated differences between foam and solid dielectric coaxial cable apply simultaneously.

E9F09

Q: What impedance does a 1/4-wavelength transmission line present to an RF generator when the line is shorted at the far end?

A: Very high impedance.

Notes: A quarter-wavelength transmission line transforms a short circuit at its load end into a very high impedance at its input. This impedance-transforming property is used in RF design for impedance matching and creating resonant stubs.

E9F10

Q: What impedance does a 1/8-wavelength transmission line present to an RF generator when the line is shorted at the far end?

A: An inductive reactance.

Notes: A shorted line shorter than 1/4 wavelength transforms the short into an inductive reactance at the input. At 1/8 wavelength, this transformed impedance appears inductive rather than capacitive or resistive to the RF generator.

E9F11

Q: What impedance does a 1/8-wavelength transmission line present to an RF generator when the line is open at the far end?

A: A capacitive reactance.

Notes: Because an open-circuited transmission line shorter than a quarter wavelength behaves like a capacitor, a 1/8-wavelength open line transforms the open circuit into a capacitive reactance at the generator. This is a standard transmission-line impedance transformation effect used in RF design and analysis on the Amateur Extra exam.

E9F12

Q: What impedance does a 1/4-wavelength transmission line present to an RF generator when the line is open at the far end?

A: Very low impedance.

Notes: A quarter-wave transmission line transforms an open circuit at its far end into a virtual short circuit at the input. This impedance inversion property causes the RF generator to see a very low impedance at the line’s input when the far end is open.

Group E9G - Using the Smith chart for impedance

E9G01

Q: Which of the following can be calculated using a Smith chart?

A: Impedance along transmission lines.

Notes: The Smith chart is a graphical tool that shows how impedance changes as you move along a transmission line. It allows amateurs to analyze and match impedances for efficient power transfer in RF systems.

E9G02

Q: What type of coordinate system is used in a Smith chart?

A: Resistance circles and reactance arcs.

Notes: On the Smith chart, constant-resistance values are plotted as circles and constant-reactance values are plotted as arcs, allowing visualization of complex impedance relationships. This polar-like coordinate system is widely used in amateur radio for impedance matching and transmission line analysis on the Amateur Extra exam.

E9G03

Q: Which of the following is often determined using a Smith chart?

A: Impedance and SWR values in transmission lines.

Notes: A Smith chart is a graphical tool used in RF engineering to analyze and visualize impedance and standing wave ratio (SWR) along transmission lines. It helps amateur radio operators match antennas and feed lines for efficient power transfer.

E9G04

Q: What are the two families of circles and arcs that make up a Smith chart?

A: Resistance and reactance.

Notes: The Smith chart graphically represents complex impedance using constant-resistance circles and constant-reactance arcs. These two families of curves allow hams to visualize and solve impedance-matching and transmission line problems on the exam and in practice.

E9G05

Q: Which of the following is a common use for a Smith chart?

A: Determine the length and position of an impedance matching stub.

Notes: On the Amateur Extra exam, the Smith chart is primarily used as a graphical tool to solve transmission line and impedance matching problems. It helps you find where along a line to place a stub and how long it must be to achieve the desired match.

Figure E9-3

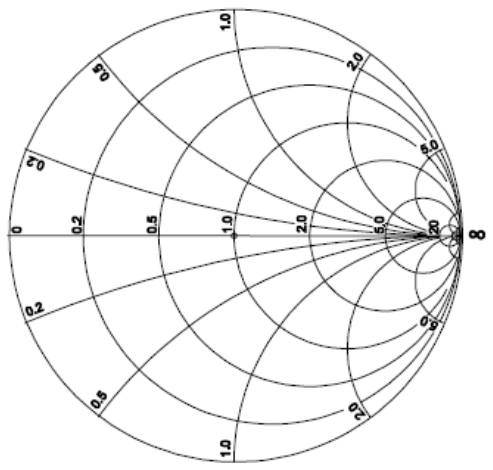

E9G06

Q: On the Smith chart shown in Figure E9-3, what is the name for the large outer circle on which the reactance arcs terminate?

A: Reactance axis.

Notes: In Smith chart terminology, the circle where all reactance arcs end is defined as the reactance axis. Recognizing this feature helps identify and interpret reactive components on the chart for the Amateur Extra exam problems.

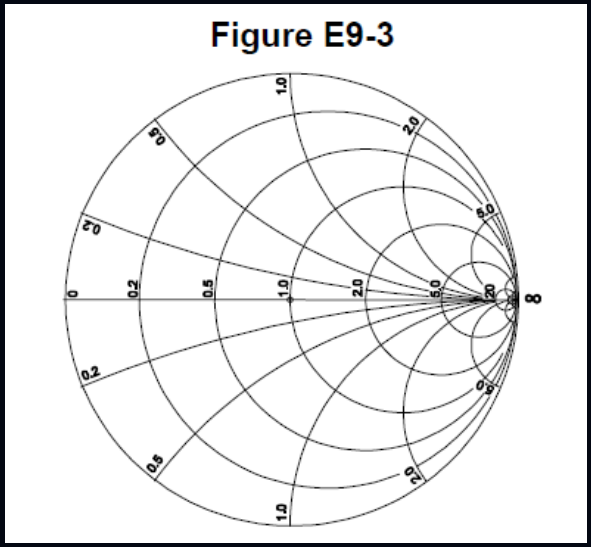

E9G07

Q: On the Smith chart shown in Figure E9-3, what is the only straight line shown?

A: The resistance axis.

Notes: In a standard Smith chart, the resistance axis is drawn as a straight horizontal line passing through the center of the chart. This makes it easy to read and adjust normalized resistance values when solving transmission line and impedance matching problems on the exam.

E9G08

Q: How is a Smith chart normalized?

A: Reassign the prime center’s impedance value.

Notes: Normalizing a Smith chart means defining the chart’s center point to represent a specific reference impedance, which simplifies plotting and analysis of impedances and reflection coefficients. By reassigning the prime center’s impedance value, all other impedances on the chart are expressed relative to that reference impedance.

E9G09

Q: What third family of circles is often added to a Smith chart during the process of designing impedance matching networks?

A: Constant-SWR circles.

Notes: Constant-SWR circles show all points that share the same standing wave ratio, helping visualize how well a matching network transforms impedances toward a desired match. On the Smith chart, they guide the design of matching networks by indicating regions of acceptable VSWR along a transmission line or network path.

E9G10

Q: What do the arcs on a Smith chart represent?

A: Points with constant reactance.

Notes: A Smith chart graphically displays complex impedances, and its arcs are lines of equal reactance value. This allows an amateur radio operator to visualize how reactive components change impedance while keeping reactance constant along each arc.

E9G11

Q: In what units are the wavelength scales on a Smith chart calibrated?

A: In fractions of transmission line electrical wavelength.

Notes: A Smith chart is referenced to the electrical length of the transmission line, so its wavelength scales are expressed as fractional parts of one electrical wavelength along that line. This allows direct reading of how impedance changes with position in terms of wavelength along the transmission line.

Group E9H - Receiving antennas, loops, and direction finding

E9H01

Q: When constructing a Beverage antenna, which of the following factors should be included in the design to achieve good performance at the desired frequency?

A: It should be at least one wavelength long.

Notes: A Beverage antenna relies on its physical length relative to the operating wavelength to develop its directional and low-noise characteristics. Making it at least one wavelength long helps ensure effective reception and proper antenna pattern at the desired frequency.

E9H02

Q: Which is generally true for 160- and 80-meter receiving antennas?

A: Atmospheric noise is so high that directivity is much more important than losses.

Notes: On the low HF bands like 160 and 80 meters, natural atmospheric noise dominates over receiver noise, so reducing noise pickup from unwanted directions is more beneficial than minimizing small signal losses. Highly directional antennas improve the signal-to-noise ratio, which is the limiting factor for reception on these bands.

E9H03

Q: What is receiving directivity factor (RDF)?

A: Peak antenna gain compared to average gain over the hemisphere around and above the antenna.

Notes: RDF characterizes how much better an antenna receives in its best direction than it does on average over the upper hemisphere. This is useful on the Amateur Extra exam for comparing receiving performance and noise rejection of different antenna designs.

E9H04

Q: What is the purpose of placing an electrostatic shield around a small-loop direction-finding antenna?

A: It eliminates unbalanced capacitive coupling to the antenna’s surroundings, improving the depth of its nulls.

Notes: The shield blocks unwanted electric-field coupling from nearby objects so the loop responds primarily to the magnetic field. This makes the directional nulls sharper and deeper, which improves direction-finding accuracy.

E9H05

Q: What challenge is presented by a small wire-loop antenna for direction finding?

A: It has a bidirectional null pattern.

Notes: A bidirectional null pattern makes it difficult to distinguish whether the signal source is on one side of the loop or exactly opposite. In Amateur Extra exam context, this ambiguity is a key limitation of simple loop antennas for accurate bearing determination.

E9H06

Q: What indicates the correct value of terminating resistance for a Beverage antenna?

A: Minimum variation in SWR over the desired frequency range.

Notes: A properly terminated Beverage antenna will show a nearly constant SWR across its intended operating band. This minimum variation in SWR confirms that the termination resistance closely matches the antenna's characteristic impedance over the desired frequency range.

E9H07

Q: What is the function of a Beverage antenna's termination resistor?

A: Absorb signals from the reverse direction.

Notes: In a Beverage antenna, the termination resistor at the far end matches the line impedance and absorbs energy arriving from the reverse direction, which helps the antenna favor reception from one desired direction. This controlled absorption improves directivity and reduces unwanted signals from the opposite end of the wire.

E9H08

Q: What is the function of a sense antenna?

A: It modifies the pattern of a DF antenna to provide a null in only one direction.

Notes: In radio direction finding, adding a sense antenna reshapes the DF antenna's bidirectional pattern into a unidirectional one by eliminating one of the nulls. This allows the operator to determine a unique direction to the signal source instead of having a 180-degree ambiguity.

E9H09

Q: What type of radiation pattern is created by a single-turn, terminated loop such as a pennant antenna?

A: Cardioid.

Notes: A terminated loop like a pennant antenna is designed to be directional with a single deep null, which results in a cardioid-shaped radiation pattern. This cardioid pattern is useful on the Amateur Extra exam for understanding directional receiving antennas and noise rejection characteristics.

E9H10

Q: How can the output voltage of a multiple-turn receiving loop antenna be increased?

A: By increasing the number of turns and/or the area enclosed by the loop.

Notes: A larger loop area and more turns intercept more of the passing magnetic field, which induces a higher voltage according to Faraday's law of induction. In the Amateur Extra exam context, this emphasizes how loop geometry directly affects received signal strength.

E9H11

Q: What feature of a cardioid pattern antenna makes it useful for direction-finding antennas?

A: A single null.

Notes: A single deep null lets the operator precisely identify the direction of minimum signal, which corresponds to a specific bearing for direction finding. This sharp null response improves accuracy when locating a signal source in Amateur Extra-level DF applications.

SUBELEMENT E0 - Amateur Radio Safety

Group E0A - RF safety, hazardous materials, and grounding

E0A01

Q: What is the primary function of an external earth connection or ground rod?

A: Lightning charge dissipation.

Notes: A properly installed ground rod provides a low-impedance path for lightning energy to flow safely into the earth. This helps protect equipment and structures by directing lightning-induced charges away from the station circuitry.

E0A02

Q: When evaluating RF exposure levels from your station at a neighbor's home, what must you do?

A: Ensure signals from your station are less than the uncontrolled maximum permissible exposure (MPE) limits.

Notes: A neighbor's home is considered an uncontrolled environment, so RF exposure there must not exceed the FCC's uncontrolled MPE limits. This protects the general public, who are not expected to have RF safety training or control over the exposure conditions.

E0A03

Q: Over what range of frequencies are the FCC human body RF exposure limits most restrictive?

A: 30 - 300 MHz.

Notes: In the 30 to 300 MHz range, the human body most efficiently absorbs RF energy, so the FCC sets the strictest exposure limits there to protect against excessive RF heating. Amateur Extra exam questions on RF safety use this range as the key reference for maximum exposure concern.

E0A04

Q: When evaluating a site with multiple transmitters operating at the same time, the operators and licensees of which transmitters are responsible for mitigating over-exposure situations?

A: Each transmitter that produces 5 percent or more of its MPE limit in areas where the total MPE limit is exceeded.

Notes: FCC RF safety rules require that any station contributing 5 percent or more of its maximum permissible exposure (MPE) in an area where the total exposure exceeds the MPE limit must take steps to reduce exposure. This ensures that all significant contributors share responsibility for correcting unsafe RF exposure conditions at a multi-transmitter site.

E0A05

Q: What hazard is created by operating at microwave frequencies?

A: The high gain antennas commonly used can result in high exposure levels.

Notes: Microwave operation often uses high-gain directional antennas that concentrate RF energy into narrow beams, increasing field strength in those areas. In the amateur radio Extra exam context, this concentrated energy can create potentially hazardous RF exposure levels for people near the antenna.

E0A06

Q: Why are there separate electric (E) and magnetic (H) MPE limits at frequencies below 300 MHz?

A: All these choices are correct:
- The body reacts to electromagnetic radiation from both the E and H fields
- Ground reflections and scattering cause the field strength to vary with location
- E field and H field radiation intensity peaks can occur at different locations

Notes: Below 300 MHz, the electric and magnetic components of RF fields can interact with the human body in different ways, so each must be limited separately. The FCC therefore specifies distinct maximum permissible exposure limits for both E and H fields in this frequency range to ensure safety in amateur radio operations.

E0A07

Q: What is meant by “100% tie-off” regarding tower safety?

A: At least one lanyard attached to the tower at all times.

Notes: 100% tie-off ensures a climber is continuously secured so a slip or loss of footing does not result in a fall. This continuous attachment is a fundamental safety requirement when working on towers in amateur radio and related services.

E0A08

Q: What does SAR measure?

A: The rate at which RF energy is absorbed by the body.

Notes: SAR quantifies how much RF power per unit mass is taken up by body tissue, which is important for assessing human exposure to RF fields in amateur radio and other services. It is a key safety metric used in exposure standards and equipment certification.

E0A09

Q: Which of the following types of equipment are exempt from RF exposure evaluations?

A: Hand-held transceivers sold before May 3, 2021.

Notes: The FCC grandfathered hand-held transceivers sold before May 3, 2021 so they do not require separate RF exposure evaluations. This exemption recognizes that these older devices were already on the market before the current RF exposure rules took effect.

E0A10

Q: When must an RF exposure evaluation be performed on an amateur station operating on 80 meters?

A: An evaluation must always be performed.

Notes: FCC RF safety rules require an exposure evaluation for amateur stations on 80 meters regardless of power level or operating conditions. This ensures that the station's operation complies with maximum permissible exposure limits for RF fields.

E0A11

Q: To what should lanyards be attached while climbing?

A: Tower legs.

Notes: Tower legs are the strongest and most secure structural members of the tower, providing a reliable attachment point for fall protection. Properly securing lanyards to tower legs reduces the risk of equipment failure or structural damage while climbing.

E0A12

Q: Where should a shock-absorbing lanyard be attached to a tower when working above ground?

A: Above the climber's head level.

Notes: Attaching the lanyard above head level minimizes the potential fall distance and reduces impact force if the climber slips. This positioning improves safety by allowing the shock absorber to function as intended within its rated limits.