FCC Amateur Extra (Element 4) Statements of Fact

TTS-optimized study guide · Grouped by subelement and question group

Workbook format: review each statement, speak it aloud, and mark weak items.

SUBELEMENT E1 - Commission Rules

Group E1A - Frequency privileges; signal frequency range; automatic message forwarding; stations aboard ships or aircraft; power restriction on 630- and 2200-meter bands

E1A01: It is not legal to transmit a 3 kilohertz bandwidth USB signal with a carrier frequency of 14.348 megahertz because The upper 1 kilohertz of the signal is outside the 20-meter band.

E1A02: When using a transceiver that displays the carrier frequency of phone signals, which of the following displayed frequencies represents the lowest frequency at which a properly adjusted LSB emission will be totally within the band: 3 kilohertz above the lower band edge.

E1A03: The highest legal carrier frequency on the 20-meter band for transmitting a 2.8 kilohertz wide USB data signal is 14.1472 megahertz.

E1A04: May an Extra class operator answer the CQ of a station on 3.601 megahertz LSB phone: No, the sideband components will extend beyond the edge of the phone band segment.

E1A05: Who must be in physical control of the station apparatus of an amateur station aboard any vessel or craft that is documented or registered in the United States: Any person holding a Federal Communications Commission issued amateur license or who is authorized for alien reciprocal operation.

E1A06: The required transmit frequency of a continuous wave signal for channelized 60 meter operation is At the center frequency of the channel.

E1A07: The maximum power permitted on the 2200-meter band is 1 watt equivalent isotropically radiated power.

E1A08: If a station in a message forwarding system inadvertently forwards a message that is in violation of Federal Communications Commission rules, who is primarily accountable for the rules violation: The control operator of the originating station.

E1A09: Except in some parts of Alaska, what is the maximum power permitted on the 630-meter band: 5 watts equivalent isotropically radiated power.

E1A10: If an amateur station is installed aboard a ship or aircraft, what condition must be met before the station is operated: Its operation must be approved by the master of the ship or the pilot in command of the aircraft.

E1A11: What licensing is required when operating an amateur station aboard a US-registered vessel in international waters: Any Federal Communications Commission-issued amateur license.

Group E1B - Station restrictions and special operations: restrictions on station location; general operating restrictions; spurious emissions; antenna structure restrictions; RACES operations

E1B01: Which of the following constitutes a spurious emission: An emission outside the signal's necessary bandwidth that can be reduced or eliminated without affecting the information transmitted.

E1B02: Which of the following is an acceptable bandwidth for digital voice or slow-scan TV transmissions made on the high frequency amateur bands: 3 kilohertz.

E1B03: Within what distance must an amateur station protect a Federal Communications Commission monitoring facility from harmful interference: 1 mile.

E1B04: What must the control operator of a repeater operating in the 70-centimeter band do if a radiolocation system experiences interference from that repeater: Cease operation or make changes to the repeater that mitigate the interference.

E1B05: The National Radio Quiet Zone is An area surrounding the National Radio Astronomy Observatory.

E1B06: Which of the following additional rules apply if you are erecting an amateur station antenna structure at a site at or near a public use airport: You may have to notify the Federal Aviation Administration and register it with the Federal Communications Commission as required by Part 17 of the Federal Communications Commission rules.

E1B07: To what type of regulations does PRB-1 apply: State and local zoning.

E1B08: What limitations may the Federal Communications Commission place on an amateur station if its signal causes interference to domestic broadcast reception, assuming that the receivers involved are of good engineering design: The amateur station must avoid transmitting during certain hours on frequencies that cause the interference.

E1B09: Which amateur stations may be operated under RACES rules: Any Federal Communications Commission-licensed amateur station certified by the responsible civil defense organization for the area served.

E1B10: What frequencies are authorized to an amateur station operating under RACES rules: All amateur service frequencies authorized to the control operator.

E1B11: What does PRB-1 require of state and local regulations affecting amateur radio antenna size and structures: Reasonable accommodations of amateur radio must be made.

Group E1C - Automatic and remote control; band-specific regulations; operating in and communicating with foreign countries; spurious emission standards; HF modulation index limit; band-specific rules

E1C01: The maximum bandwidth for a data emission on 60 meters is 2.8 kilohertz.

E1C02: Which of the following apply to communications transmitted to amateur stations in foreign countries: Communications must be limited to those incidental to the purpose of the amateur service and remarks of a personal nature.

E1C03: How long must an operator wait after filing a notification with the Utilities Technology Council (UTC) before operating on the 2200-meter or 630-meter band: Operators may operate after 30 days, providing they have not been told that their station is within 1 kilometer of PLC systems using those frequencies.

E1C04: An IARP is A permit that allows US amateurs to operate in certain countries of the Americas.

E1C05: Under what situation may a station transmit third party communications while being automatically controlled: Only when transmitting RTTY or data emissions.

E1C06: Which of the following is required in order to operate in accordance with CEPT rules in foreign countries where permitted: You must have a copy of Federal Communications Commission Public Notice DA 16-1048.

E1C07: What notifications must be given before transmitting on the 630- or 2200-meter bands: Operators must inform the Utilities Technology Council (UTC) of their call sign and coordinates of the station.

E1C08: The maximum permissible duration of a remotely controlled station's transmissions if its control link malfunctions is 3 minutes.

E1C09: The highest modulation index permitted at the highest modulation frequency for angle modulation below 29.0 megahertz is 1.0.

E1C10: The maximum mean power level for a spurious emission below 30 megahertz with respect to the fundamental emission is - 43 decibels.

E1C11: Which of the following operating arrangements allows a Federal Communications Commission-licensed US citizen to operate in many European countries, and amateurs from many European countries to operate in the US: CEPT.

E1C12: In what portion of the 630-meter band are phone emissions permitted: The entire band.

Group E1D - Amateur Space and Earth stations; telemetry and telecommand rules; identification of balloon transmissions; one-way communications

E1D01: The definition of telemetry is One-way transmission of measurements at a distance from the measuring instrument.

E1D02: Which of the following may transmit encrypted messages: Telecommand signals from a space telecommand station.

E1D03: A space telecommand station is An amateur station that transmits communications to initiate, modify, or terminate functions of a space station.

E1D04: Which of the following is required in the identification transmissions from a balloon-borne telemetry station: Call sign.

E1D05: What must be posted at the location of a station being operated by telecommand on or within 50 kilometers of the Earth's surface: All these choices are correct.

E1D06: The maximum permitted transmitter output power when operating a model craft by telecommand is 1 watt.

E1D07: Which of the following high frequency amateur bands include allocations for space stations: 40 meters, 20 meters, 15 meters, and 10 meters.

E1D08: Which very high frequency amateur bands have frequencies authorized for space stations: 2 meters.

E1D09: Which ultra high frequency amateur bands have frequencies authorized for space stations: 70 centimeters and 13 centimeters.

E1D10: Which amateur stations are eligible to be telecommand stations of space stations, subject to the privileges of the class of operator license held by the control operator of the station: Any amateur station so designated by the space station licensee.

E1D11: Which amateur stations are eligible to operate as Earth stations: Any amateur station, subject to the privileges of the class of operator license held by the control operator.

E1D12: Which of the following amateur stations may transmit one-way communications: A space station, beacon station, or telecommand station.

Group E1E - Volunteer examiner program: definitions; qualifications; preparation and administration of exams; reimbursement; accreditation; question pools; documentation requirements

E1E01: For which types of out-of-pocket expenses do the Part 97 rules state that VEs and VECs may be reimbursed: Preparing, processing, administering, and coordinating an examination for an amateur radio operator license.

E1E02: Who is tasked by Part 97 with maintaining the pools of questions for all US amateur license examinations: The VECs.

E1E03: A Volunteer Examiner Coordinator is An organization that has entered into an agreement with the Federal Communications Commission to coordinate, prepare, and administer amateur operator license examinations.

E1E04: The requirement to be accredited as a Volunteer Examiner is A VEC must confirm that the VE applicant meets Federal Communications Commission requirements to serve as an examiner.

E1E05: What must the VE team do with the application form if the examinee does not pass the exam: Return the application document to the examinee.

E1E06: Who is responsible for the proper conduct and necessary supervision during an amateur operator license examination session: Each administering VE.

E1E07: What should a VE do if a candidate fails to comply with the examiner's instructions during an amateur operator license examination: Immediately terminate the candidate's examination.

E1E08: To which of the following examinees may a VE not administer an examination: Relatives of the VE as listed in the Federal Communications Commission rules.

E1E09: What may be the penalty for a VE who fraudulently administers or certifies an examination: Revocation of the VE's amateur station license grant and the suspension of the VE's amateur operator license grant.

E1E10: What must the administering VEs do after the administration of a successful examination for an amateur operator license: They must submit the application document to the coordinating VEC according to the coordinating VEC instructions.

E1E11: What must the VE team do if an examinee scores a passing grade on all examination elements needed for an upgrade or new license: Three VEs must certify that the examinee is qualified for the license grant and that they have complied with the administering VE requirements.

Group E1F - Miscellaneous rules: external RF power amplifiers; prohibited communications; spread spectrum; auxiliary stations; Canadian amateurs operating in the US; special temporary authority

E1F01: On what frequencies are spread spectrum transmissions permitted: Only on amateur frequencies above 222 megahertz.

E1F02: What privileges are authorized in the US to persons holding an amateur service license granted by the government of Canada: The operating terms and conditions of the Canadian amateur service license, not to exceed US Amateur Extra class license privileges.

E1F03: Under what circumstances may a dealer sell an external radio frequency power amplifier capable of operation below 144 megahertz if it has not been granted Federal Communications Commission certification: The amplifier is constructed or modified by an amateur radio operator for use at an amateur station.

E1F04: Which of the following geographic descriptions approximately describes "Line A": A line roughly parallel to and south of the border between the US and Canada.

E1F05: Amateur stations may not transmit in which of the following frequency segments if they are located in the contiguous 48 states and north of Line A: 420 megahertz - 430 megahertz.

E1F06: Under what circumstances might the Federal Communications Commission issue a Special Temporary Authority (STA) to an amateur station: To provide for experimental amateur communications.

E1F07: When may an amateur station send a message to a business: When neither the amateur nor their employer has a pecuniary interest in the communications.

E1F08: Which of the following types of amateur station communications are prohibited: Communications transmitted for hire or material compensation, except as otherwise provided in the rules.

E1F09: Which of the following cannot be transmitted over an amateur radio mesh network: Messages encoded to obscure their meaning.

E1F10: Who may be the control operator of an auxiliary station: Only Technician, General, Advanced, or Amateur Extra class operators.

E1F11: Which of the following best describes one of the standards that must be met by an external radio frequency power amplifier if it is to qualify for a grant of Federal Communications Commission certification: It must satisfy the Federal Communications Commission's spurious emission standards when operated at the lesser of 1500 watts or its full output power.

SUBELEMENT E2 - Operating Procedures

Group E2A - Amateur radio in space: amateur satellites; orbital mechanics; frequencies and modes; satellite hardware; satellite operations

E2A01: The direction of an ascending pass for an amateur satellite is From south to north.

E2A02: Which of the following is characteristic of an inverting linear transponder: All these choices are correct.

E2A03: How is an upload signal processed by an inverting linear transponder: The signal is mixed with a local oscillator signal and the difference product is transmitted.

E2A04: The “mode” of an amateur radio satellite means The satellite’s uplink and downlink frequency bands.

E2A05: What do the letters in a satellite’s mode designator specify: The uplink and downlink frequency ranges.

E2A06: Keplerian elements are Parameters that define the orbit of a satellite.

E2A07: Which of the following types of signals can be relayed through a linear transponder: All these choices are correct.

E2A08: Because should effective radiated power (ERP) be limited to a satellite that uses a linear transponder, To avoid reducing the downlink power to all other users.

E2A09: What do the terms “L band” and “S band” specify: The 23- and 13-centimeter bands.

E2A10: What type of satellite appears to stay in one position in the sky: Geostationary.

E2A11: What type of antenna can be used to minimize the effects of spin modulation and Faraday rotation: A circularly polarized antenna.

Group E2B - Television practices: fast-scan television standards and techniques; slow scan television standards and techniques

E2B01: In digital television, what does a coding rate of 3 slash 4 mean: 25% of the data sent is forward error correction data.

E2B02: How many horizontal lines make up a fast-scan (NTSC) television frame: 525.

E2B03: How is an interlaced scanning pattern generated in a fast-scan (NTSC) television system: By scanning odd-numbered lines in one field and even-numbered lines in the next.

E2B04: How is color information sent in analog SSTV: Color lines are sent sequentially.

E2B05: Which of the following describes the use of vestigial sideband in analog fast-scan TV transmissions: Vestigial sideband reduces the bandwidth while increasing the fidelity of low frequency video components.

E2B06: Vestigial sideband modulation is Amplitude modulation in which one complete sideband and a portion of the other are transmitted.

E2B07: Which types of modulation are used for amateur television DVB-T signals: QAM and QPSK.

E2B08: What technique allows commercial analog TV receivers to be used for fast-scan TV operations on the 70-centimeter band: Transmitting on channels shared with cable TV.

E2B09: What kind of receiver can be used to receive and decode SSTV using the Digital Radio Mondiale (DRM) protocol: single sideband.

E2B10: What aspect of an analog slow-scan television signal encodes the brightness of the picture: Tone frequency.

E2B11: The function of the vertical interval signaling (VIS) code sent as part of an SSTV transmission is To identify the SSTV mode being used.

E2B12: What signals SSTV receiving software to begin a new picture line: Specific tone frequencies.

Group E2C - Contest and DX operating; remote operation techniques; log data format; contact confirmation; RF network systems

E2C01: What indicator is required to be used by US-licensed operators when operating a station via remote control and the remote transmitter is located in the US: No additional indicator is required.

E2C02: Which of the following file formats is used for exchanging amateur radio log data: ADIF.

E2C03: From which of the following bands is amateur radio contesting generally excluded: 30 meters.

E2C04: Which of the following frequencies can be used for amateur radio mesh networks: Frequencies shared with various unlicensed wireless data services.

E2C05: The function of a DX QSL Manager is Handle the receiving and sending of confirmations for a DX station.

E2C06: During a very high frequency slash ultra high frequency contest, in which band segment would you expect to find the highest level of single sideband or continuous wave activity: In the weak signal segment of the band, with most of the activity near the calling frequency.

E2C07: The Cabrillo format is A standard for submission of electronic contest logs.

E2C08: Which of the following contacts may be confirmed through the Logbook of The World (LoTW): All these choices are correct.

E2C09: What type of equipment is commonly used to implement an amateur radio mesh network: A wireless router running custom firmware.

E2C10: Because do DX stations often transmit and receive on different frequencies, All these choices are correct.

E2C11: How should you generally identify your station when attempting to contact a DX station during a contest or in a pileup: Send your full call sign once or twice.

E2C12: What indicates the delay between a control operator action and the corresponding change in the transmitted signal: Latency.

Group E2D - Operating methods: digital modes and procedures for VHF and UHF; APRS; EME procedures; meteor scatter procedures

E2D01: Which of the following digital modes is designed for meteor scatter communications: MSK144.

E2D02: What information replaces signal-to-noise ratio when using the FT8 or FT4 modes in a very high frequency contest: Grid square.

E2D03: Which of the following digital modes is designed for earth moon earth communications: Q65.

E2D04: What technology is used for real-time tracking of balloons carrying amateur radio transmitters: APRS.

E2D05: The characteristic of the JT65 mode is Decodes signals with a very low signal-to-noise ratio.

E2D06: Which of the following is a method for establishing earth moon earth contacts: Time-synchronous transmissions alternating between stations.

E2D07: What digital protocol is used by APRS: AX.25.

E2D08: What type of packet frame is used to transmit APRS beacon data: Unnumbered Information.

E2D09: What type of modulation is used by JT65: Multitone AFSK.

E2D10: What does the packet path WIDE3-1 designate: Three digipeater hops are requested with one remaining.

E2D11: How do APRS stations relay data: By packet digipeaters.

Group E2E - Operating methods: digital modes and procedures for HF

E2E01: Which of the following types of modulation is used for data emissions below 30 megahertz: FSK.

E2E02: Which of the following synchronizes WSJT-X digital mode transmit slash receive timing: Synchronization of computer clocks.

E2E03: To what does the "4" in FT4 refer: Four-tone continuous-phase frequency shift keying.

E2E04: Which of the following is characteristic of the FST4 mode: All these choices are correct.

E2E05: Which of these digital modes does not support keyboard-to-keyboard operation: WSPR.

E2E06: The length of an FT8 transmission cycle is 15 seconds.

E2E07: How does Q65 differ from JT65: Multiple receive cycles are averaged.

E2E08: Which of the following high frequency digital modes can be used to transfer binary files: PACTOR.

E2E09: Which of the following high frequency digital modes uses variable-length character coding: PSK31.

E2E10: Which of these digital modes has the narrowest bandwidth: FT8.

E2E11: The difference between direct FSK and audio FSK is Direct FSK modulates the transmitter VFO.

E2E12: How do ALE stations establish contact: ALE constantly scans a list of frequencies, activating the radio when the designated call sign is received.

E2E13: Which of these digital modes has the highest data throughput under clear communication conditions: PACTOR IV.

SUBELEMENT E3 - Radio Wave Propagation

Group E3A - Electromagnetic Waves and Specialized Propagation: Earth-Moon-Earth (EME) communications; meteor scatter; microwave tropospheric and scatter propagation; auroral propagation; daily variation of ionospheric propagation; circular polarization

E3A01: The approximate maximum separation measured along the surface of the Earth between two stations communicating by earth moon earth is 12,000 miles, if the moon is “visible” by both stations.

E3A02: What characterizes libration fading of an earth moon earth signal: A fluttery, irregular fading.

E3A03: When scheduling earth moon earth contacts, which of these conditions will generally result in the least path loss: When the Moon is at perigee.

E3A04: In what direction does an electromagnetic wave travel: It travels at a right angle to the electric and magnetic fields.

E3A05: How are the component fields of an electromagnetic wave oriented: They are at right angles.

E3A06: What should be done to continue a long-distance contact when the MUF for that path decreases due to darkness: Switch to a lower frequency high frequency band.

E3A07: Atmospheric ducts capable of propagating microwave signals often form over what geographic feature: Large bodies of water.

E3A08: When a meteor strikes the Earth’s atmosphere, a linear ionized region is formed at what region of the ionosphere: The E region.

E3A09: Which of the following frequency ranges is most suited for meteor-scatter communications: 28 megahertz - 148 megahertz.

E3A10: What determines the speed of electromagnetic waves through a medium: The index of refraction.

E3A11: A typical range for tropospheric duct propagation of microwave signals is 100 miles to 300 miles.

E3A12: Most likely to result in auroral propagation is Severe geomagnetic storms.

E3A13: Which of these emission modes is best for auroral propagation: continuous wave.

E3A14: Circularly polarized electromagnetic waves are Waves with rotating electric and magnetic fields.

Group E3B - Transequatorial propagation; long-path propagation; ordinary and extraordinary waves; chordal hop; sporadic-E mechanisms; ground-wave propagation

E3B01: Where is transequatorial propagation (TEP) most likely to occur: Between points separated by 2,000 miles to 3,000 miles over a path perpendicular to the geomagnetic equator.

E3B02: The approximate maximum range for signals using transequatorial propagation is 5,000 miles.

E3B03: At what time of day is transequatorial propagation most likely to occur: Afternoon or early evening.

E3B04: “extraordinary” and “ordinary” waves are Independently propagating, elliptically polarized waves created in the ionosphere.

E3B05: Which of the following paths is most likely to support long-distance propagation on 160 meters: A path entirely in darkness.

E3B06: On which of the following amateur bands is long-path propagation most frequent: 40 meters and 20 meters.

E3B07: What effect does lowering a signal’s transmitted elevation angle have on ionospheric high frequency skip propagation: The distance covered by each hop increases.

E3B08: How does the maximum range of ground-wave propagation change when the signal frequency is increased: It decreases.

E3B09: At what time of year is sporadic-E propagation most likely to occur: Around the solstices, especially the summer solstice.

E3B10: The effect of chordal-hop propagation is The signal experiences less loss compared to multi-hop propagation, which uses Earth as a reflector.

E3B11: At what time of day is sporadic-E propagation most likely to occur: Between sunrise and sunset.

E3B12: Chordal-hop propagation is Successive ionospheric refractions without an intermediate reflection from the ground.

E3B13: What type of polarization is supported by ground-wave propagation: Vertical.

Group E3C - Propagation prediction and reporting: radio horizon; effects of space-weather phenomena

E3C01: The cause of short-term radio blackouts is Solar flares.

E3C02: Indicated by a rising A-index or K-index is Increasing disturbance of the geomagnetic field.

E3C03: Which of the following signal paths is most likely to experience high levels of absorption when the A-index or K-index is elevated: Through the auroral oval.

E3C04: What does the value of Bz (B sub z) represent: North-south strength of the interplanetary magnetic field.

E3C05: What orientation of Bz (B sub z) increases the likelihood that charged particles from the Sun will cause disturbed conditions: Southward.

E3C06: How does the very high frequency slash ultra high frequency radio horizon compare to the geographic horizon: It is approximately 15 percent farther.

E3C07: Which of the following indicates the greatest solar flare intensity: Class X.

E3C08: Which of the following is the space-weather term for an extreme geomagnetic storm: G5.

E3C09: What type of data is reported by amateur radio propagation reporting networks: Digital-mode and continuous wave signals.

E3C10: What does the 304 amperes solar parameter measure: UV emissions at 304 angstroms, correlated to the solar flux index.

E3C11: What does VOACAP software model: high frequency propagation.

E3C12: Which of the following is indicated by a sudden rise in radio background noise across a large portion of the high frequency spectrum: A coronal mass ejection impact or a solar flare has occurred.

SUBELEMENT E4 - Amateur Practices

Group E4A - Test equipment: analog and digital instruments; spectrum analyzers; antenna analyzers; oscilloscopes; RF measurements

E4A01: Which of the following limits the highest frequency signal that can be accurately displayed on a digital oscilloscope: Sampling rate of the analog-to-digital converter.

E4A02: Which of the following parameters does a spectrum analyzer display on the vertical and horizontal axes: Signal amplitude and frequency.

E4A03: Which of the following test instruments is used to display spurious signals and slash or intermodulation distortion products generated by an single sideband transmitter: Spectrum analyzer.

E4A04: How is compensation of an oscilloscope probe performed: A square wave is displayed, and the probe is adjusted until the horizontal portions of the displayed wave are as nearly flat as possible.

E4A05: The purpose of using a prescaler with a frequency counter is Reduce the signal frequency to within the counter's operating range.

E4A06: The effect of aliasing on a digital oscilloscope when displaying a waveform is A false, jittery low-frequency version of the waveform is displayed.

E4A07: Which of the following is an advantage of using an antenna analyzer compared to an SWR bridge: Antenna analyzers compute SWR and impedance automatically.

E4A08: Which of the following is used to measure SWR: All these choices are correct.

E4A09: Which of the following is good practice when using an oscilloscope probe: Minimize the length of the probe's ground connection.

E4A10: Which trigger mode is most effective when using an oscilloscope to measure a linear power supply’s output ripple: Line.

E4A11: Which of the following can be measured with an antenna analyzer: All these choices are correct.

Group E4B - Measurement technique and limitations: instrument accuracy and performance limitations; probes; techniques to minimize errors; measurement of Q; instrument calibration; S parameters; vector network analyzers; RF signals

E4B01: Which of the following factors most affects the accuracy of a frequency counter: Time base accuracy.

E4B02: The significance of voltmeter sensitivity expressed in ohms per volt is The full scale reading of the voltmeter multiplied by its ohms per volt rating is the input impedance of the voltmeter.

E4B03: Which S parameter is equivalent to forward gain: S21.

E4B04: Which S parameter represents input port return loss or reflection coefficient (equivalent to VSWR): S11.

E4B05: What three test loads are used to calibrate an radio frequency vector network analyzer: Short circuit, open circuit, and 50 ohms.

E4B06: How much power is being absorbed by the load when a directional power meter connected between a transmitter and a terminating load reads 100 watts forward power and 25 watts reflected power: 75 watts.

E4B07: What do the subscripts of S parameters represent: The port or ports at which measurements are made.

E4B08: Which of the following can be used to determine the Q of a series-tuned circuit: The bandwidth of the circuit's frequency response.

E4B09: Which of the following can be measured by a two-port vector network analyzer: Filter frequency response.

E4B10: Which of the following methods measures intermodulation distortion in an single sideband transmitter: Modulate the transmitter using two AF signals having non-harmonically related frequencies and observe the radio frequency output with a spectrum analyzer.

E4B11: Which of the following can be measured with a vector network analyzer: All these choices are correct.

Group E4C - Receiver performance: phase noise, noise floor, image rejection, minimum detectable signal (MDS), increasing signal-to-noise ratio and dynamic range, noise figure, reciprocal mixing; selectivity; SDR non-linearity; use of attenuators at low frequencies

E4C01: An effect of excessive phase noise in an SDR receiver's master clock oscillator is It can combine with strong signals on nearby frequencies to generate interference.

E4C02: Which of the following receiver circuits can be effective in eliminating interference from strong out-of-band signals: A front-end filter or preselector.

E4C03: The term for the suppression in an frequency modulation receiver of one signal by another stronger signal on the same frequency is Capture effect.

E4C04: The noise figure of a receiver is The ratio in dB of the noise generated by the receiver to the theoretical minimum noise.

E4C05: What does a receiver noise floor of -174 dBm represent: The theoretical noise in a 1 Hz bandwidth at the input of a perfect receiver at room temperature.

E4C06: How much does increasing a receiver's bandwidth from 50 Hz to 1,000 Hz increase the receiver's noise floor: 13 decibels.

E4C07: What does the MDS of a receiver represent: The minimum discernible signal.

E4C08: An SDR receiver is overloaded when input signals exceed what level: The reference voltage of the analog-to-digital converter.

E4C09: Which of the following choices is a good reason for selecting a high IF for a superheterodyne high frequency or very high frequency communications receiver: Easier for front-end circuitry to eliminate image responses.

E4C10: An advantage of having a variety of receiver bandwidths from which to select is Receive bandwidth can be set to match the modulation bandwidth, maximizing signal-to-noise ratio and minimizing interference.

E4C11: Because does input attenuation reduce receiver overload on the lower frequency high frequency bands with little or no impact on signal-to-noise ratio, Atmospheric noise is generally greater than internally generated noise even after attenuation.

E4C12: How does a narrow-band roofing filter affect receiver performance: It improves blocking dynamic range by attenuating strong signals near the receive frequency.

E4C13: Reciprocal mixing is Local oscillator phase noise mixing with adjacent strong signals to create interference to desired signals.

E4C14: The purpose of the receiver IF Shift control is To reduce interference from stations transmitting on adjacent frequencies.

Group E4D - Receiver performance characteristics: dynamic range; intermodulation and cross-modulation interference; third-order intercept; desensitization; preselector; sensitivity; link margin

E4D01: The blocking dynamic range of a receiver means The difference in dB between the noise floor and the level of an incoming signal that will cause 1 decibels of gain compression.

E4D02: Which of the following describes problems caused by poor dynamic range in a receiver: Spurious signals caused by cross modulation and desensitization from strong adjacent signals.

E4D03: What creates intermodulation interference between two repeaters in close proximity: The output signals mix in the final amplifier of one or both transmitters.

E4D06: The term for the reduction in receiver sensitivity caused by a strong signal near the received frequency is Desensitization.

E4D07: Which of the following reduces the likelihood of receiver desensitization: Insert attenuation before the first radio frequency stage.

E4D08: What causes intermodulation in an electronic circuit: Nonlinear circuits or devices.

E4D09: The purpose of the preselector in a communications receiver is To increase the rejection of signals outside the band being received.

E4D10: What does a third-order intercept level of 40 dBm mean with respect to receiver performance: A pair of 40 dBm input signals will theoretically generate a third-order intermodulation product that has the same output amplitude as either of the input signals.

E4D11: They are odd-order intermodulation products, created within a receiver, of particular interest compared to other products because Odd-order products of two signals in the band being received are also likely to be within the band.

E4D12: The link margin in a system with a transmit power level of 10 watts (+40 dBm), a system antenna gain of 10 dBi, a cable loss of 3 decibels, a path loss of 136 decibels, a receiver minimum discernable signal of -103 dBm, and a required signal-to-noise ratio of 6 decibels is +8 decibels.

E4D13: The received signal level with a transmit power of 10 watts (+40 dBm), a transmit antenna gain of 6 dBi, a receive antenna gain of 3 dBi, and a path loss of 100 decibels is -51 dBm.

E4D14: What power level does a receiver minimum discernible signal of -100 dBm represent: 0.1 picowatts.

Group E4E - Noise and interference: external RF interference; electrical and computer noise; line noise; DSP filtering and noise reduction; common-mode current; surge protectors; single point ground panel

E4E01: What problem can occur when using an automatic notch filter (ANF) to remove interfering carriers while receiving continuous wave signals: Removal of the continuous wave signal as well as the interfering carrier.

E4E02: Which of the following types of noise can often be reduced by a digital noise reduction: All these choices are correct.

E4E04: How can conducted noise from an automobile battery charging system be suppressed: By installing ferrite chokes on the charging system leads.

E4E05: Used to suppress radio frequency interference from a line-driven AC motor is A brute-force AC-line filter in series with the motor's power leads.

E4E06: What type of electrical interference can be caused by computer network equipment: The appearance of unstable modulated or unmodulated signals at specific frequencies.

E4E07: Which of the following can cause shielded cables to radiate or receive interference: Common-mode currents on the shield and conductors.

E4E08: What current flows equally on all conductors of an unshielded multiconductor cable: Common-mode current.

E4E09: What undesirable effect can occur when using a noise blanker: Strong signals may be distorted and appear to cause spurious emissions.

E4E10: Which of the following can create intermittent loud roaring or buzzing AC line interference: All these choices are correct.

E4E11: What could be the cause of local amplitude modulation broadcast band signals combining to generate spurious signals on the MF or high frequency bands: Nearby corroded metal connections are mixing and reradiating the broadcast signals.

E4E12: What causes interference received as a series of carriers at regular intervals across a wide frequency range: Switch-mode power supplies.

E4E13: Where should a station AC surge protector be installed: On the single point ground panel.

E4E14: The purpose of a single point ground panel is Ensure all lightning protectors activate at the same time.

SUBELEMENT E5 - Electrical Principles

Group E5A - Resonance and Q: characteristics of resonant circuits; series and parallel resonance; definitions and effects of Q; half-power bandwidth

E5A01: What can cause the voltage across reactances in a series RLC circuit to be higher than the voltage applied to the entire circuit: Resonance.

E5A02: The resonant frequency of an RLC circuit if R is 22 ohms, L is 50 microhenries, and C is 40 picofarads is 3.56 megahertz.

E5A03: The magnitude of the impedance of a series RLC circuit at resonance is Approximately equal to circuit resistance.

E5A04: The magnitude of the impedance of a parallel RLC circuit at resonance is Approximately equal to circuit resistance.

E5A05: The result of increasing the Q of an impedance-matching circuit is Matching bandwidth is decreased.

E5A06: The magnitude of the circulating current within the components of a parallel LC circuit at resonance is It is at a maximum.

E5A07: The magnitude of the current at the input of a parallel RLC circuit at resonance is Minimum.

E5A08: The phase relationship between the current through and the voltage across a series resonant circuit at resonance is The voltage and current are in phase.

E5A09: How is the Q of an RLC parallel resonant circuit calculated: Resistance divided by the reactance of either the inductance or capacitance.

E5A10: The resonant frequency of an RLC circuit if R is 33 ohms, L is 50 microhenries, and C is 10 picofarads is 7.12 megahertz.

E5A11: The half-power bandwidth of a resonant circuit that has a resonant frequency of 7.1 megahertz and a Q of 150 is 47.3 kilohertz.

E5A12: The half-power bandwidth of a resonant circuit that has a resonant frequency of 3.7 megahertz and a Q of 118 is 31.4 kilohertz.

E5A13: An effect of increasing Q in a series resonant circuit is Internal voltages increase.

Group E5B - Time constants and phase relationships: RL and RC time constants; phase angle in reactive circuits and components; admittance and susceptance

E5B01: The term for the time required for the capacitor in an RC circuit to be charged to 63.2% of the applied voltage or to discharge to 36.8% of its initial voltage is One time constant.

E5B02: What letter is commonly used to represent susceptance: B.

E5B03: How is impedance in polar form converted to an equivalent admittance: Take the reciprocal of the magnitude and change the sign of the angle.

E5B04: The time constant of a circuit having two 220-microfarad capacitors and two 1-megohm resistors, all in parallel is 220 seconds.

E5B05: The effect on the magnitude of pure reactance when it is converted to susceptance is It is replaced by its reciprocal.

E5B06: Susceptance is The imaginary part of admittance.

E5B07: The phase angle between the voltage across and the current through a series RLC circuit if XC is 500 ohms, R is 1 kilohm, and XL is 250 ohms is 14.0 degrees with the voltage lagging the current.

E5B08: The phase angle between the voltage across and the current through a series RLC circuit if XC is 300 ohms, R is 100 ohms, and XL is 100 ohms is 63 degrees with the voltage lagging the current.

E5B09: The relationship between the AC current through a capacitor and the voltage across a capacitor is Current leads voltage by 90 degrees.

E5B10: The relationship between the AC current through an inductor and the voltage across an inductor is Voltage leads current by 90 degrees.

E5B11: The phase angle between the voltage across and the current through a series RLC circuit if XC is 25 ohms, R is 100 ohms, and XL is 75 ohms is 27 degrees with the voltage leading the current.

E5B12: Admittance is The inverse of impedance.

Group E5C - Coordinate systems and phasors in electronics: rectangular coordinates; polar coordinates; phasors; logarithmic axes

E5C01: Which of the following represents pure capacitive reactance of 100 ohms in rectangular notation: 0 - j100.

E5C02: How are impedances described in polar coordinates: By magnitude and phase angle.

E5C03: Which of the following represents a pure inductive reactance in polar coordinates: A positive 90 degree phase angle.

E5C04: What type of Y-axis scale is most often used for graphs of circuit frequency response: Logarithmic.

E5C05: What kind of diagram is used to show the phase relationship between impedances at a given frequency: Phasor diagram.

E5C06: What does the impedance 50 - j25 ohms represent: 50 ohms resistance in series with 25 ohms capacitive reactance.

E5C07: Where is the impedance of a pure resistance plotted on rectangular coordinates: On the horizontal axis.

E5C08: What coordinate system is often used to display the phase angle of a circuit containing resistance, inductive, and slash or capacitive reactance: Polar coordinates.

E5C09: When using rectangular coordinates to graph the impedance of a circuit, what do the axes represent: The X axis represents the resistive component, and the Y axis represents the reactive component.

Figure E5-1

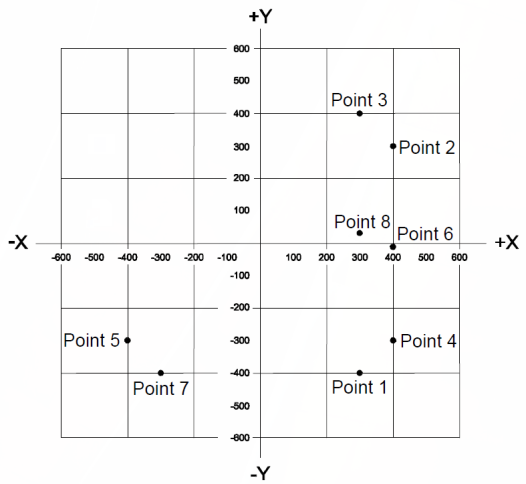

E5C10: Which point on Figure E5-1 best represents the impedance of a series circuit consisting of a 400-ohm resistor and a 38-picofarad capacitor at 14 megahertz: Point 4.

Figure E5-1

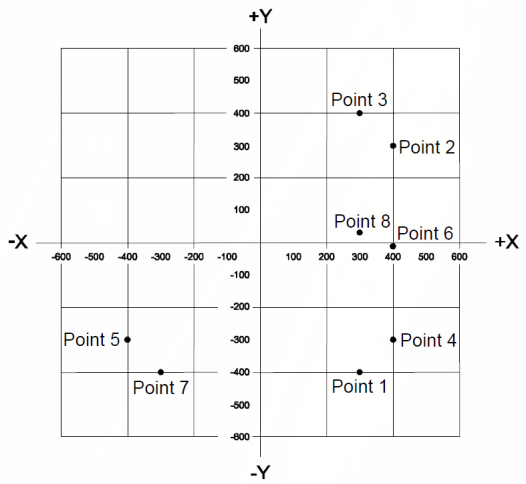

E5C11: Which point in Figure E5-1 best represents the impedance of a series circuit consisting of a 300-ohm resistor and an 18-microhenry inductor at 3.505 megahertz: Point 3.

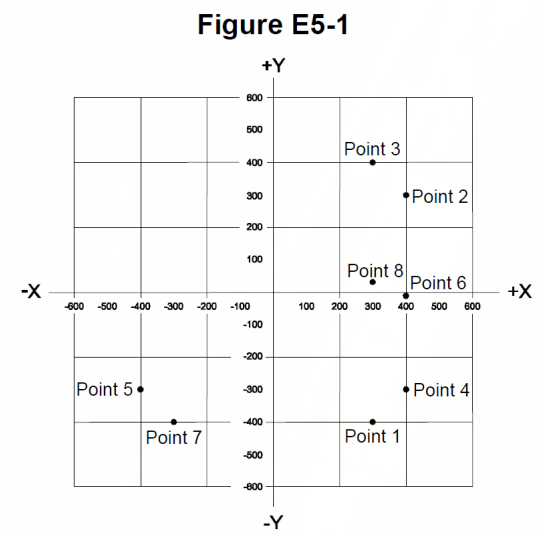

E5C12: Which point on Figure E5-1 best represents the impedance of a series circuit consisting of a 300-ohm resistor and a 19-picofarad capacitor at 21.200 megahertz: Point 1.

Group E5D - RF effects in components and circuits: skin effect; real and reactive power; electrical length of conductors

E5D01: The result of conductor skin effect is Resistance increases as frequency increases because radio frequency current flows closer to the surface.

E5D02: It is important to keep lead lengths short for components used in circuits for very high frequency and above because To minimize inductive reactance.

E5D03: The phase relationship between current and voltage for reactive power is They are 90 degrees out of phase.

E5D04: They are short connections used at microwave frequencies because To reduce phase shift along the connection.

E5D05: What parasitic characteristic causes electrolytic capacitors to be unsuitable for use at radio frequency: Inductance.

E5D06: What parasitic characteristic creates an inductor’s self-resonance: Inter-turn capacitance.

E5D07: What combines to create the self-resonance of a component: The component’s nominal and parasitic reactance.

E5D08: The primary cause of loss in film capacitors at radio frequency is Skin effect.

E5D09: What happens to reactive power in ideal inductors and capacitors: Energy is stored in magnetic or electric fields, but power is not dissipated.

E5D10: As a conductor’s diameter increases, what is the effect on its electrical length: It increases.

E5D11: How much real power is consumed in a circuit consisting of a 100-ohm resistor in series with a 100-ohm inductive reactance drawing 1 ampere: 100 watts.

E5D12: Reactive power is Wattless, nonproductive power.

SUBELEMENT E6 - Circuit Components

Group E6A - Semiconductor materials and devices: semiconductor materials; bipolar junction transistors; operation and types of field-effect transistors

E6A01: In what application is gallium arsenide used as a semiconductor material: In microwave circuits.

E6A02: Which of the following semiconductor materials contains excess free electrons: N-type.

E6A03: Because does a PN-junction diode not conduct current when reverse biased, Holes in P-type material and electrons in the N-type material are separated by the applied voltage, widening the depletion region.

E6A04: The name given to an impurity atom that adds holes to a semiconductor crystal structure is Acceptor impurity.

E6A05: How does DC input impedance at the gate of a field-effect transistor (FET) compare with that of a bipolar transistor: An FET has higher input impedance.

E6A06: The beta of a bipolar junction transistor is The change in collector current with respect to the change in base current.

E6A07: Which of the following indicates that a silicon NPN junction transistor is biased on: Base-to-emitter voltage of approximately 0.6 volts to 0.7 volts.

E6A08: The term for the frequency at which the grounded-base current gain of a bipolar junction transistor has decreased to 0.7 of the gain obtainable at 1 kilohertz is Alpha cutoff frequency.

E6A09: A depletion-mode field-effect transistor (FET) is An FET that exhibits a current flow between source and drain when no gate voltage is applied.

Figure E6-1

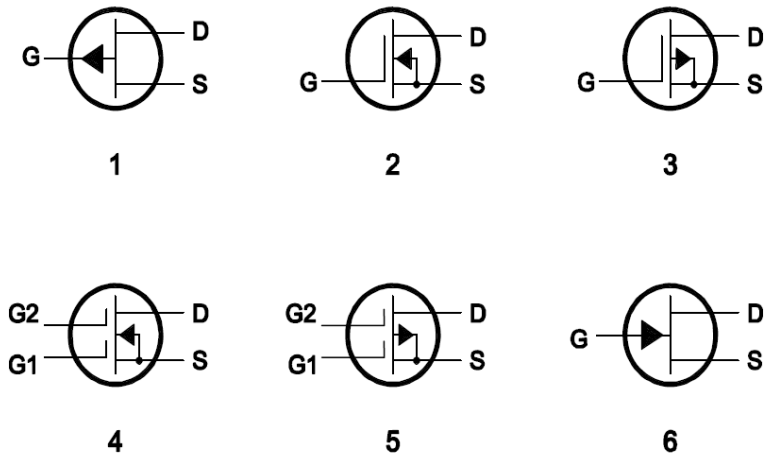

E6A10: In Figure E6-1, which is the schematic symbol for an N-channel dual-gate MOSFET: 4.

Figure E6-1

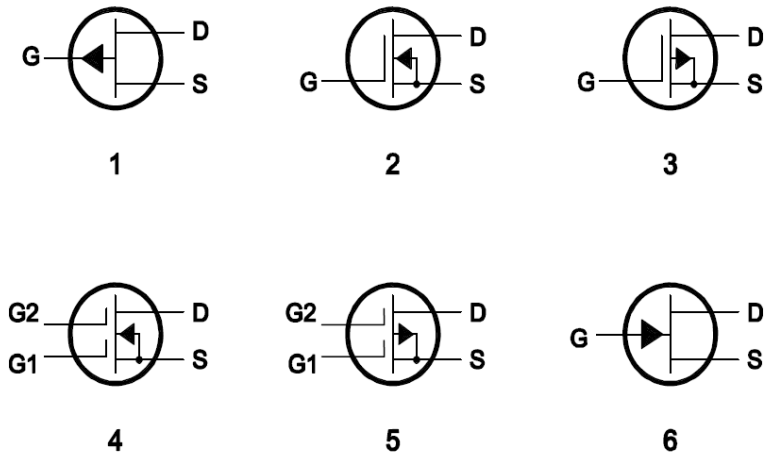

E6A11: In Figure E6-1, which is the schematic symbol for a P-channel junction FET: 1.

E6A12: The purpose of connecting Zener diodes between a MOSFET gate and its source or drain is To protect the gate from static damage.

Group E6B - Diodes

E6B01: The most useful characteristic of a Zener diode is A constant voltage drop under conditions of varying current.

E6B02: Which characteristic of a Schottky diode makes it a better choice than a silicon junction diode for use as a power supply rectifier: Lower forward voltage drop.

E6B03: What property of an LED's semiconductor material determines its forward voltage drop: Band gap.

E6B04: What type of semiconductor device is designed for use as a voltage-controlled capacitor: Varactor diode.

E6B05: What characteristic of a PIN diode makes it useful as an radio frequency switch: Low junction capacitance.

E6B06: Which of the following is a common use of a Schottky diode: As a very high frequency slash ultra high frequency mixer or detector.

E6B07: What causes a junction diode to fail from excessive current: Excessive junction temperature.

E6B08: Which of the following is a Schottky barrier diode: Metal-semiconductor junction.

E6B09: A common use for point-contact diodes is As an radio frequency detector.

Figure E6-2

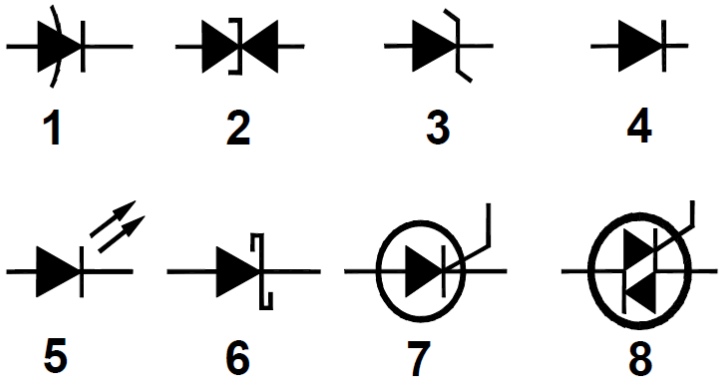

E6B10: In Figure E6-2, which is the schematic symbol for a Schottky diode: 6.

E6B11: Used to control the attenuation of radio frequency signals by a PIN diode is Forward DC bias current.

Group E6C - Digital ICs: families of digital ICs; gates; programmable logic devices

E6C01: The function of hysteresis in a comparator is To prevent input noise from causing unstable output signals.

E6C02: What happens when the level of a comparator's input signal crosses the threshold voltage: The comparator changes its output state.

E6C03: Tri-state logic is Logic devices with 0, 1, and high-impedance output states.

E6C04: Which of the following is an advantage of BiCMOS logic: It has the high input impedance of CMOS and the low output impedance of bipolar transistors.

E6C05: Which of the following digital logic families has the lowest power consumption: CMOS.

E6C06: Because do CMOS digital integrated circuits have high immunity to noise on the input signal or power supply, The input switching threshold is about half the power supply voltage.

E6C07: What best describes a pull-up or pull-down resistor: A resistor connected to the positive or negative supply used to establish a voltage when an input or output is an open circuit.

Figure E6-3

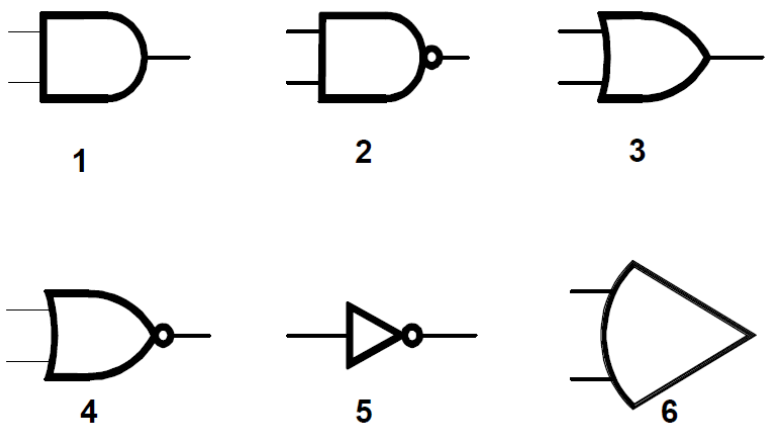

E6C08: In Figure E6-3, which is the schematic symbol for a NAND gate: 2.

E6C09: Used to design the configuration of a field-programmable gate array (FPGA) is Hardware description language (HDL).

Figure E6-3

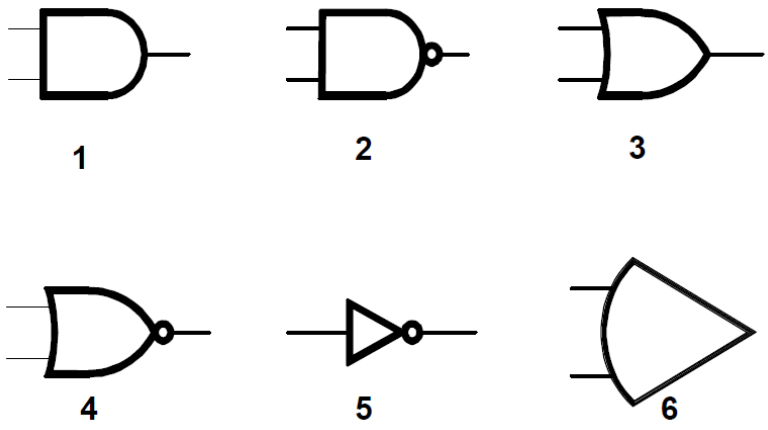

E6C10: In Figure E6-3, which is the schematic symbol for a NOR gate: 4.

Figure E6-3

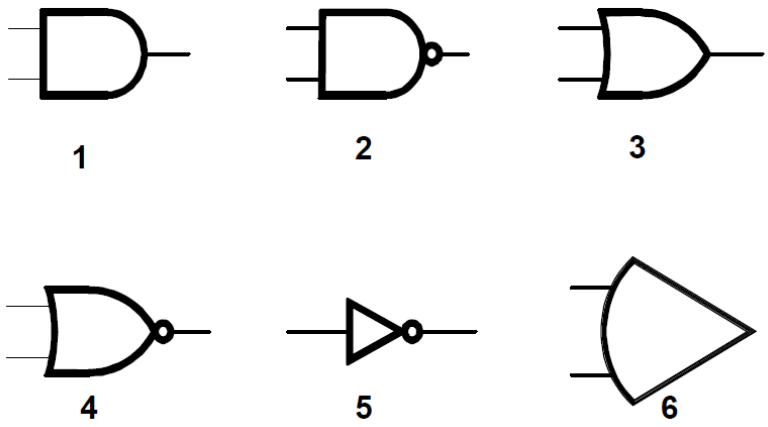

E6C11: In Figure E6-3, which is the schematic symbol for the NOT operation (inversion): 5.

Group E6D - Inductors and piezoelectricity: permeability, core material and configuration; transformers; piezoelectric devices

E6D01: Piezoelectricity is A characteristic of materials that generate a voltage when stressed and that flex when a voltage is applied.

E6D02: The equivalent circuit of a quartz crystal is Series RLC in parallel with a shunt C representing electrode and stray capacitance.

E6D03: Which of the following is an aspect of the piezoelectric effect: Mechanical deformation of material due to the application of a voltage.

E6D04: They are cores of inductors and transformers sometimes constructed of thin layers because To reduce power loss from eddy currents in the core.

E6D05: How do ferrite and powdered iron compare for use in an inductor core: Ferrite cores generally require fewer turns to produce a given inductance value.

E6D08: Which of the following materials has the highest temperature stability of its magnetic characteristics: Powdered iron.

E6D09: What devices are commonly used as very high frequency and ultra high frequency parasitic suppressors at the input and output terminals of a transistor high frequency amplifier: Ferrite beads.

E6D10: A primary advantage of using a toroidal core instead of a solenoidal core in an inductor is Toroidal cores confine most of the magnetic field within the core material.

E6D11: Which type of core material decreases inductance when inserted into a coil: Brass.

E6D12: What causes inductor saturation: Operation at excessive magnetic flux.

Group E6E - Semiconductor materials and packages for RF use

E6E01: It is gallium arsenide (GaAs) useful for semiconductor devices operating at ultra high frequency and higher frequencies because Higher electron mobility.

E6E02: Which of the following device packages is a through-hole type: DIP.

E6E03: Which of the following materials supports the highest frequency of operation when used in MMICs: Gallium nitride.

E6E04: Which is the most common input and output impedance of MMICs: 50 ohms.

E6E05: Which of the following noise figure values is typical of a low-noise ultra high frequency preamplifier: 0.5 decibels.

E6E06: What characteristics of MMICs make them a popular choice for very high frequency through microwave circuits: Controlled gain, low noise figure, and constant input and output impedance over the specified frequency range.

E6E07: What type of transmission line is often used for connections to MMICs: Microstrip.

E6E08: How is power supplied to the most common type of MMIC: Through a resistor and slash or radio frequency choke connected to the amplifier output lead.

E6E09: Which of the following component package types have the least parasitic effects at frequencies above the high frequency range: Surface mount.

E6E10: What advantage does surface-mount technology offer at radio frequency compared to using through-hole components: All these choices are correct.

E6E11: A characteristic of DIP packaging used for integrated circuits is Two rows of connecting pins on opposite sides of package (dual in-line package).

E6E12: They are DIP through-hole package ICs not typically used at ultra high frequency and higher frequencies because Excessive lead length.

Group E6F - Electro-optical technology: photoconductivity; photovoltaic devices; optical sensors and encoders; optically isolated switching

E6F01: What absorbs the energy from light falling on a photovoltaic cell: Electrons.

E6F02: What happens to photoconductive material when light shines on it: Resistance decreases.

E6F03: The most common configuration of an optoisolator or optocoupler is An LED and a phototransistor.

E6F04: The photovoltaic effect is The conversion of light to electrical energy.

E6F05: Which of the following describes an optical shaft encoder: A device that detects rotation by interrupting a light source with a patterned wheel.

E6F06: Which of these materials is most commonly used to create photoconductive devices: Crystalline semiconductor.

E6F07: A solid-state relay is A device that uses semiconductors to implement the functions of an electromechanical relay.

E6F08: They are optoisolators often used in conjunction with solid-state circuits that control 120 VAC circuits because Optoisolators provide an electrical isolation between a control circuit and the circuit being switched.

E6F09: The efficiency of a photovoltaic cell is The relative fraction of light that is converted to current.

E6F10: The most common material used in power-generating photovoltaic cells is Silicon.

E6F11: The approximate open-circuit voltage produced by a fully illuminated silicon photovoltaic cell is 0.5 volts.

SUBELEMENT E7 - Practical Circuits

Group E7A - Digital circuits: digital circuit principles and logic circuits; classes of logic elements; positive and negative logic; frequency dividers; truth tables

E7A01: Which circuit is bistable: A flip-flop.

E7A02: The function of a decade counter is It produces one output pulse for every 10 input pulses.

E7A03: Which of the following can divide the frequency of a pulse train by 2: A flip-flop.

E7A04: How many flip-flops are required to divide a signal frequency by 16: 4.

E7A05: Which of the following circuits continuously alternates between two states without an external clock signal: Astable multivibrator.

E7A06: A characteristic of a monostable multivibrator is It switches temporarily to an alternate state for a set time.

E7A07: What logical operation does a NAND gate perform: It produces a 0 at its output only if all inputs are 1.

E7A08: What logical operation does an OR gate perform: It produces a 1 at its output if any input is 1.

E7A09: What logical operation is performed by a two-input exclusive NOR gate: It produces a 0 at its output if one and only one of its inputs is 1.

E7A10: A truth table is A list of inputs and corresponding outputs for a digital device.

E7A11: What does “positive logic” mean in reference to logic devices: High voltage represents a 1, low voltage a 0.

Group E7B - Amplifiers: class of operation; vacuum tube and solid-state circuits; distortion and intermodulation; spurious and parasitic suppression; switching-type amplifiers

E7B01: For what portion of the signal cycle does each active element in a push-pull, Class AB amplifier conduct: More than 180 degrees but less than 360 degrees.

E7B02: A Class D amplifier is An amplifier that uses switching technology to achieve high efficiency.

E7B03: What circuit is required at the output of an radio frequency switching amplifier: A filter to remove harmonic content.

E7B04: The operating point of a Class A common emitter amplifier is Approximately halfway between saturation and cutoff.

E7B05: What can be done to prevent unwanted oscillations in an radio frequency power amplifier: Install parasitic suppressors and slash or neutralize the stage.

E7B06: A characteristic of a grounded-grid amplifier is Low input impedance.

E7B07: Which of the following is the likely result of using a Class C amplifier to amplify a single-sideband phone signal: Signal distortion and excessive bandwidth.

E7B08: They are switching amplifiers more efficient than linear amplifiers because The switching device is at saturation or cutoff most of the time.

E7B09: Characteristic of an emitter follower (or common collector) amplifier is Input and output signals in-phase.

Figure E7-1

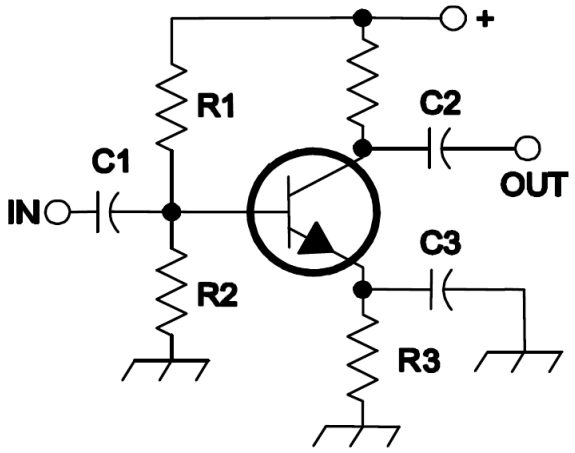

E7B10: In Figure E7-1, what is the purpose of R1 and R2: Voltage divider bias.

Figure E7-1

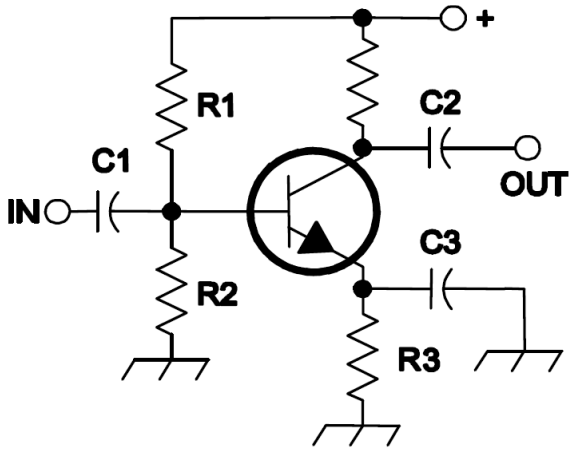

E7B11: In Figure E7-1, what is the purpose of R3: Self bias.

Figure E7-1

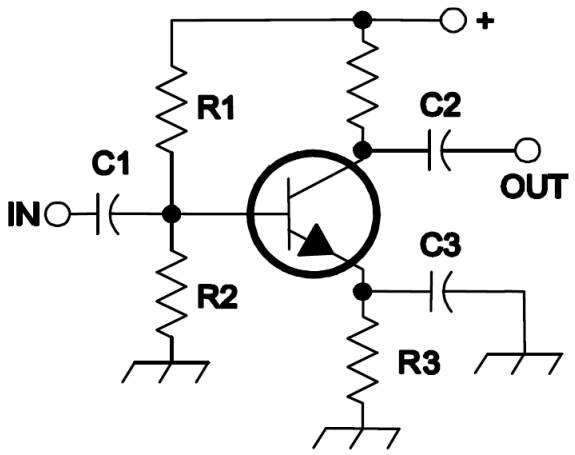

E7B12: What type of amplifier circuit is shown in Figure E7-1: Common emitter.

Group E7C - Filters and matching networks: types of networks; types of filters; filter applications; filter characteristics; impedance matching

E7C01: How are the capacitors and inductors of a low-pass filter Pi-network arranged between the network's input and output: A capacitor is connected between the input and ground, another capacitor is connected between the output and ground, and an inductor is connected between the input and output.

E7C02: The frequency response of a T-network with series capacitors and a shunt inductor is High-pass.

E7C03: The purpose of adding an inductor to a Pi-network to create a Pi-L-network is Greater harmonic suppression.

E7C04: How does an impedance-matching circuit transform a complex impedance to a resistive impedance: It cancels the reactive part of the impedance and changes the resistive part to the desired value.

E7C05: Which filter type has ripple in the passband and a sharp cutoff: A Chebyshev filter.

E7C06: The characteristics of an elliptical filter are Extremely sharp cutoff with one or more notches in the stop band.

E7C07: Which describes a Pi-L network: A Pi-network with an additional output series inductor.

E7C08: Which of the following is most frequently used as a band-pass or notch filter in very high frequency and ultra high frequency transceivers: A helical filter.

E7C09: A crystal lattice filter is A filter for low-level signals made using quartz crystals.

E7C10: Which of the following filters is used in a 2-meter band repeater duplexer: A cavity filter.

E7C11: Which of the following measures a filter's ability to reject signals in adjacent channels: Shape factor.

Group E7D - Power supplies and voltage regulators; solar array charge controllers

E7D01: How does a linear electronic voltage regulator work: The conduction of a control element is varied to maintain a constant output voltage.

E7D02: How does a switchmode voltage regulator work: By varying the duty cycle of pulses input to a filter.

E7D03: What device is used as a stable voltage reference: A Zener diode.

E7D04: Which of the following describes a three-terminal voltage regulator: A series regulator.

E7D05: Which of the following types of linear voltage regulator operates by loading the unregulated voltage source: A shunt regulator.

Figure E7-2

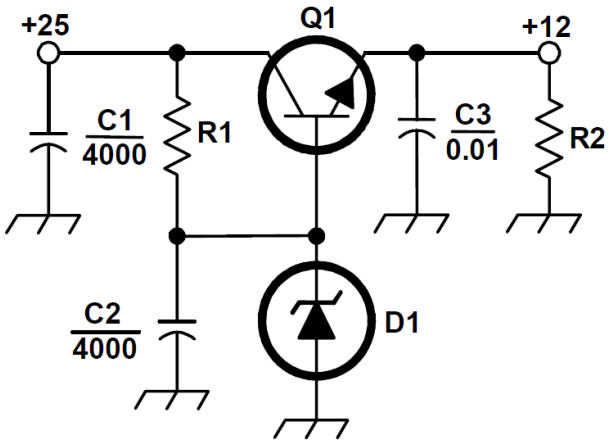

E7D06: The purpose of Q1 in the circuit shown in Figure E7-2 is It controls the current to keep the output voltage constant.

Figure E7-2

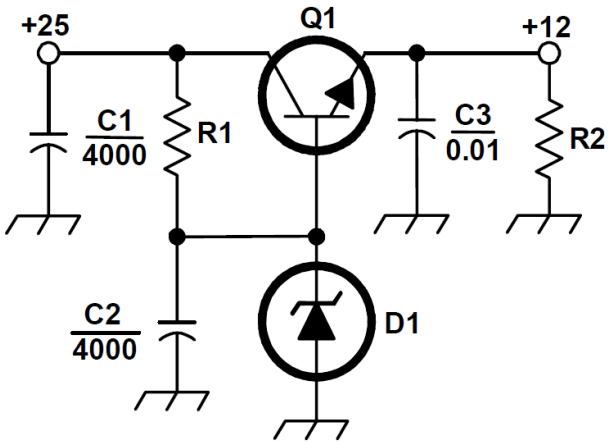

E7D07: The purpose of C2 in the circuit shown in Figure E7-2 is It bypasses rectifier output ripple around D1.

Figure E7-2

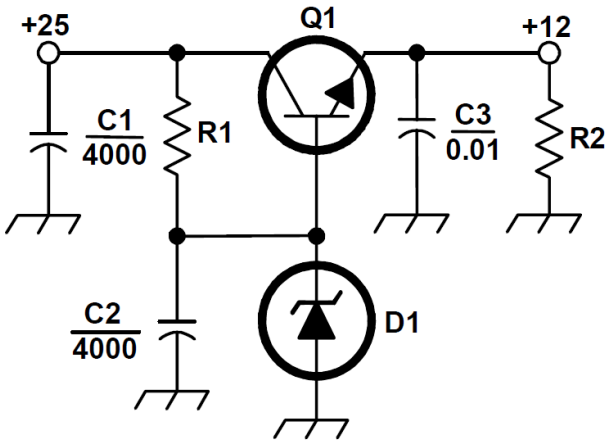

E7D08: What type of circuit is shown in Figure E7-2: Linear voltage regulator.

E7D09: How is battery operating time calculated: Capacity in amp-hours divided by average current.

E7D10: It is a switching type power supply less expensive and lighter than an equivalent linear power supply because The high frequency inverter design uses much smaller transformers and filter components for an equivalent power output.

E7D11: The purpose of an inverter connected to a solar panel output is Convert the panel's output from DC to AC.

E7D12: The dropout voltage of a linear voltage regulator is Minimum input-to-output voltage required to maintain regulation.

E7D13: Which of the following calculates power dissipated by a series linear voltage regulator: Voltage difference from input to output multiplied by output current.

E7D15: The purpose of a step-start circuit in a high-voltage power supply is To allow the filter capacitors to charge gradually.

Group E7E - Modulation and demodulation: reactance, phase, and balanced modulators; detectors; mixers

E7E01: Which of the following can be used to generate frequency modulation phone signals: Reactance modulation of a local oscillator.

E7E02: The function of a reactance modulator is Produce PM or frequency modulation signals by varying a capacitance.

E7E03: A frequency discriminator is A circuit for detecting frequency modulation signals.

E7E04: One way to produce a single-sideband phone signal is Use a balanced modulator followed by a filter.

E7E05: Added to an frequency modulation speech channel to boost the higher audio frequencies is A pre-emphasis network.

E7E06: It is de-emphasis used in frequency modulation communications receivers because For compatibility with transmitters using phase modulation.

E7E07: The term “baseband” in radio communications means The frequency range occupied by a message signal prior to modulation.

E7E08: The principal frequencies that appear at the output of a mixer are The two input frequencies along with their sum and difference frequencies.

E7E09: What occurs when the input signal levels to a mixer are too high: Spurious mixer products are generated.

E7E10: How does a diode envelope detector function: By rectification and filtering of radio frequency signals.

E7E11: Which type of detector is used for demodulating single sideband signals: Product detector.

Group E7F - Software defined radio fundamentals: digital signal processing (DSP) filtering, modulation, and demodulation; analog-digital conversion; digital filters

E7F01: “direct sampling” in software defined radios means Incoming radio frequency is digitized by an analog-to-digital converter without being mixed with a local oscillator signal.

E7F02: What kind of digital signal processing audio filter is used to remove unwanted noise from a received single sideband signal: An adaptive filter.

E7F03: What type of digital signal processing filter is used to generate an single sideband signal: A Hilbert-transform filter.

E7F04: Which method generates an single sideband signal using digital signal processing: Signals are combined in quadrature phase relationship.

E7F05: How frequently must an analog signal be sampled to be accurately reproduced: At least twice the rate of the highest frequency component of the signal.

E7F06: The minimum number of bits required to sample a signal with a range of 1 volt at a resolution of 1 millivolt is 10 bits.

E7F07: What function is performed by a Fast Fourier Transform: Converting signals from the time domain to the frequency domain.

E7F08: The function of decimation is Reducing the effective sample rate by removing samples.

E7F09: It is an anti-aliasing filter required in a decimator because It removes high-frequency signal components that would otherwise be reproduced as lower frequency components.

E7F10: What aspect of receiver analog-to-digital conversion determines the maximum receive bandwidth of a direct-sampling software defined radio (SDR): Sample rate.

E7F11: What sets the minimum detectable signal level for a direct-sampling software defined receiver in the absence of atmospheric or thermal noise: Reference voltage level and sample width in bits.

E7F12: Which of the following is generally true of Finite Impulse Response (FIR) filters: FIR filters can delay all frequency components of the signal by the same amount.

E7F13: The function of taps in a digital signal processing filter is Provide incremental signal delays for filter algorithms.

E7F14: Which of the following would allow a digital signal processing filter to create a sharper filter response: More taps.

Group E7G - Operational amplifiers: characteristics and applications

E7G01: The typical output impedance of an op-amp is Very low.

E7G02: The frequency response of the circuit in E7-3 if a capacitor is added across the feedback resistor is Low-pass filter.

E7G03: The typical input impedance of an op-amp is Very high.

E7G04: The term “op-amp input offset voltage” means The differential input voltage needed to bring the open loop output voltage to zero.

E7G05: How can unwanted ringing and audio instability be prevented in an op-amp audio filter: Restrict both gain and Q.

E7G06: The gain-bandwidth of an operational amplifier is The frequency at which the open-loop gain of the amplifier equals one.

E7G07: What voltage gain can be expected from the circuit in Figure E73 when R1 is 10 ohms and radio frequency is 470 ohms: 47.

E7G08: How does the gain of an ideal operational amplifier vary with frequency: It does not vary with frequency.

Figure E7-3

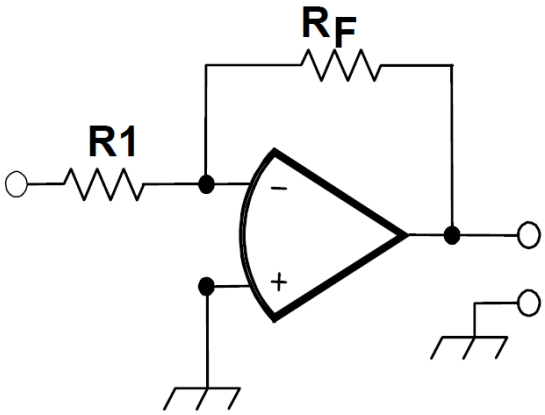

E7G09: What will be the output voltage of the circuit shown in Figure E7-3 if R1 is 1,000 ohms, radio frequency is 10,000 ohms, and 0.23 volts DC is applied to the input: -2.3 volts.

Figure E7-3

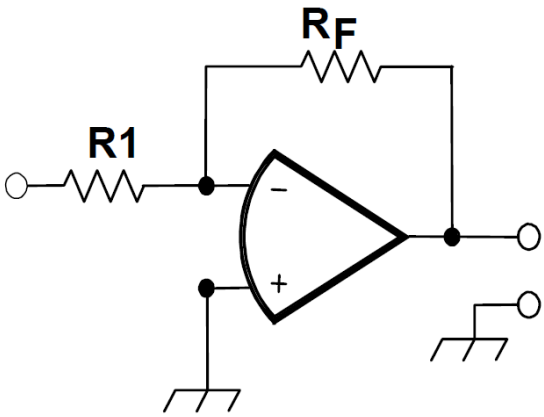

E7G10: What absolute voltage gain can be expected from the circuit in Figure E7-3 when R1 is 1,800 ohms and radio frequency is 68 kilohms: 38.

Figure E7-3

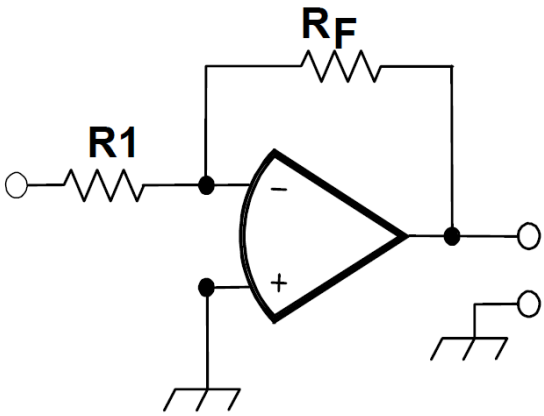

E7G11: What absolute voltage gain can be expected from the circuit in Figure E7-3 when R1 is 3,300 ohms and radio frequency is 47 kilohms: 14.

E7G12: An operational amplifier is A high-gain, direct-coupled differential amplifier with very high input impedance and very low output impedance.

Group E7H - Oscillators and signal sources: types of oscillators; synthesizers and phase-locked loops; direct digital synthesizers; stabilizing thermal drift; microphonics; high-accuracy oscillators

E7H01: Three common oscillator circuits are Colpitts, Hartley, and Pierce.

E7H02: A microphonic is Changes in oscillator frequency caused by mechanical vibration.

E7H03: A phase-locked loop is An electronic servo loop consisting of a phase detector, a low-pass filter, a voltage-controlled oscillator, and a stable reference oscillator.

E7H04: How is positive feedback supplied in a Colpitts oscillator: Through a capacitive divider.

E7H05: How is positive feedback supplied in a Pierce oscillator: Through a quartz crystal.

E7H06: Which of these functions can be performed by a phase-locked loop: Frequency synthesis and frequency modulation demodulation.

E7H07: How can an oscillator's microphonic responses be reduced: Mechanically isolate the oscillator circuitry from its enclosure.

E7H08: Which of the following components can be used to reduce thermal drift in crystal oscillators: NP0 capacitors.

E7H09: What type of frequency synthesizer circuit uses a phase accumulator, lookup table, digital-to-analog converter, and a low-pass anti-alias filter: A direct digital synthesizer.

E7H10: What information is contained in the lookup table of a direct digital synthesizer (DDS): Amplitude values that represent the desired waveform.

E7H11: The major spectral impurity components of direct digital synthesizers are Spurious signals at discrete frequencies.

E7H12: Which of the following ensures that a crystal oscillator operates on the frequency specified by the crystal manufacturer: Provide the crystal with a specified parallel capacitance.

E7H13: Which of the following is a technique for providing highly accurate and stable oscillators needed for microwave transmission and reception: All these choices are correct.

SUBELEMENT E8 - Signals And Emissions

Group E8A - Fourier analysis; RMS measurements; average RF power and peak envelope power (PEP); analog/digital conversion

E8A01: What technique shows that a square wave is made up of a sine wave and its odd harmonics: Fourier analysis.

E8A02: Which of the following is a type of analog-to-digital conversion: Successive approximation.

E8A03: Which of the following describes a signal in the time domain: Amplitude at different times.

E8A04: “dither” with respect to analog-to-digital converters is A small amount of noise added to the input signal to reduce quantization noise.

E8A05: The benefit of making voltage measurements with a true-root mean square calculating meter is root mean square is measured for both sinusoidal and non-sinusoidal signals.

E8A06: The approximate ratio of PEP-to-average power in an unprocessed single-sideband phone signal is 2.5 to 1.

E8A07: What determines the PEP-to-average power ratio of an unprocessed single-sideband phone signal: Speech characteristics.

E8A08: They are direct or flash conversion analog-to-digital converters used for a software defined radio because Very high speed allows digitizing high frequencies.

E8A09: How many different input levels can be encoded by an analog-to-digital converter with 8-bit resolution: 256.

E8A10: The purpose of a low-pass filter used at the output of a digital-to-analog converter is Remove spurious sampling artifacts from the output signal.

E8A11: Which of the following is a measure of the quality of an analog-to-digital converter: Total harmonic distortion.

Group E8B - Modulation and demodulation: modulation methods; modulation index and deviation ratio; frequency- and time-division multiplexing; orthogonal frequency-division multiplexing (OFDM)

E8B01: The modulation index of an frequency modulation signal is The ratio of frequency deviation to modulating signal frequency.

E8B02: How does the modulation index of a phase-modulated emission vary with radio frequency carrier frequency: It does not depend on the radio frequency carrier frequency.

E8B03: The modulation index of an frequency modulation phone signal having a maximum frequency deviation of 3000 Hz either side of the carrier frequency if the highest modulating frequency is 1000 Hz is 3.

E8B04: The modulation index of an frequency modulation phone signal having a maximum carrier deviation of plus or minus 6 kilohertz if the highest modulating frequency is 2 kilohertz is 3.

E8B05: The deviation ratio of an frequency modulation phone signal having a maximum frequency swing of plus or minus 5 kilohertz if the highest modulation frequency is 3 kilohertz is 1.67.

E8B06: The deviation ratio of an frequency modulation phone signal having a maximum frequency swing of plus or minus 7.5 kilohertz if the highest modulation frequency is 3.5 kilohertz is 2.14.

E8B07: Orthogonal frequency-division multiplexing (OFDM) is a technique used for which types of amateur communication: Digital modes.

E8B08: What describes orthogonal frequency-division multiplexing (OFDM): A digital modulation technique using subcarriers at frequencies chosen to avoid intersymbol interference.

E8B09: Deviation ratio is The ratio of the maximum carrier frequency deviation to the highest audio modulating frequency.

E8B10: Frequency division multiplexing (FDM) is Dividing the transmitted signal into separate frequency bands that each carry a different data stream.

E8B11: Digital time division multiplexing is Two or more signals are arranged to share discrete time slots of a data transmission.

Group E8C - Digital signals: digital communication modes; information rate vs. bandwidth; error correction; constellation diagrams

E8C01: Quadrature Amplitude Modulation or QAM is Transmission of data by modulating the amplitude of two carriers of the same frequency but 90 degrees out of phase.

E8C02: The definition of symbol rate in a digital transmission is The rate at which the waveform changes to convey information.

E8C03: Because should the phase of a PSK signal be changed at the zero crossing of the radio frequency signal, To minimize bandwidth.

E8C04: What technique minimizes the bandwidth of a PSK31 signal: Use of sinusoidal data pulses.

E8C05: The approximate bandwidth of a 13-WPM International Morse Code transmission is 52 Hz.

E8C06: The bandwidth of an FT8 signal is 50 Hz.

E8C07: The bandwidth of a 4,800-Hz frequency shift, 9,600-baud ASCII frequency modulation transmission is 15.36 kilohertz.

E8C08: How does ARQ accomplish error correction: If errors are detected, a retransmission is requested.

E8C09: Which digital code allows only one bit to change between sequential code values: Gray code.

E8C10: How can data rate be increased without increasing bandwidth: Using a more efficient digital code.

E8C11: The relationship between symbol rate and baud is They are the same.

E8C12: What factors affect the bandwidth of a transmitted continuous wave signal: Keying speed and shape factor (rise and fall time).

E8C13: Described by the constellation diagram of a QAM or QPSK signal is The possible phase and amplitude states for each symbol.

E8C14: What type of addresses do nodes have in a mesh network: Internet Protocol (IP).

E8C15: What technique do individual nodes use to form a mesh network: Discovery and link establishment protocols.

Group E8D - Keying defects and overmodulation of digital signals; digital codes; spread spectrum

E8D01: They are received spread spectrum signals resistant to interference because Signals not using the spread spectrum algorithm are suppressed in the receiver.

E8D02: What spread spectrum communications technique uses a high-speed binary bit stream to shift the phase of an radio frequency carrier: Direct sequence.

E8D03: Which describes spread spectrum frequency hopping: Rapidly varying the frequency of a transmitted signal according to a pseudorandom sequence.

E8D04: The primary effect of extremely short rise or fall time on a continuous wave signal is The generation of key clicks.

E8D05: The most common method of reducing key clicks is Increase keying waveform rise and fall times.

E8D06: The advantage of including parity bits in ASCII characters is Some types of errors can be detected.

E8D07: A common cause of overmodulation of AFSK signals is Excessive transmit audio levels.

E8D08: What parameter evaluates distortion of an AFSK signal caused by excessive input audio levels: Intermodulation Distortion (IMD).

E8D09: Considered an acceptable maximum IMD level for an idling PSK signal is -30 decibels.

E8D10: Some of the differences between the Baudot digital code and ASCII are Baudot uses 5 data bits per character, ASCII uses 7 or 8, Baudot uses 2 characters as letters slash figures shift codes, ASCII has no letters slash figures shift code.

E8D11: One advantage of using ASCII code for data communications is It is possible to transmit both uppercase and lowercase text.

SUBELEMENT E9 - Antennas And Transmission Lines

Group E9A - Basic antenna parameters: radiation resistance, gain, beamwidth, efficiency; effective radiated power (ERP) and effective isotropic radiated power (EIRP)

E9A01: An isotropic radiator is A hypothetical, lossless antenna having equal radiation intensity in all directions used as a reference for antenna gain.

E9A02: The effective radiated power (ERP) of a repeater station with 150 watts transmitter power output, 2 decibels feed line loss, 2.2 decibels duplexer loss, and 7 dBd antenna gain is 286 watts.

E9A03: What term describing total radiated power takes into account all gains and losses: Effective radiated power.

E9A04: Which of the following factors affect the feed point impedance of an antenna: Antenna height.

E9A05: What does the term “ground gain” mean: An increase in signal strength from ground reflections in the environment of the antenna.

E9A06: The effective radiated power (ERP) of a repeater station with 200 watts transmitter power output, 4 decibels feed line loss, 3.2 decibels duplexer loss, 0.8 decibels circulator loss, and 10 dBd antenna gain is 317 watts.

E9A07: The effective isotropic radiated power (equivalent isotropically radiated power) of a repeater station with 200 watts transmitter power output, 2 decibels feed line loss, 2.8 decibels duplexer loss, 1.2 decibels circulator loss, and 7 dBi antenna gain is 252 watts.

E9A08: Which frequency band has the smallest first Fresnel zone: 5.8 gigahertz.

E9A09: Antenna efficiency is Radiation resistance divided by total resistance.

E9A10: Which of the following improves the efficiency of a ground-mounted quarter-wave vertical antenna: Installing a ground radial system.

E9A11: Which of the following determines ground losses for a ground-mounted vertical antenna operating on high frequency: Soil conductivity.

E9A12: How much gain does an antenna have compared to a half-wavelength dipole if it has 6 decibels gain over an isotropic radiator: 3.85 decibels.

Group E9B - Antenna patterns and designs: azimuth and elevation patterns; gain as a function of pattern; antenna modeling

Figure E9-1

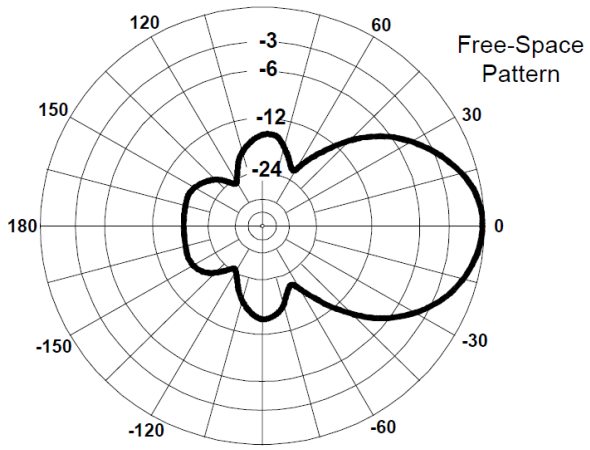

E9B01: The 3 decibels beamwidth of the antenna radiation pattern shown in Figure E9-1 is 50 degrees.

Figure E9-1

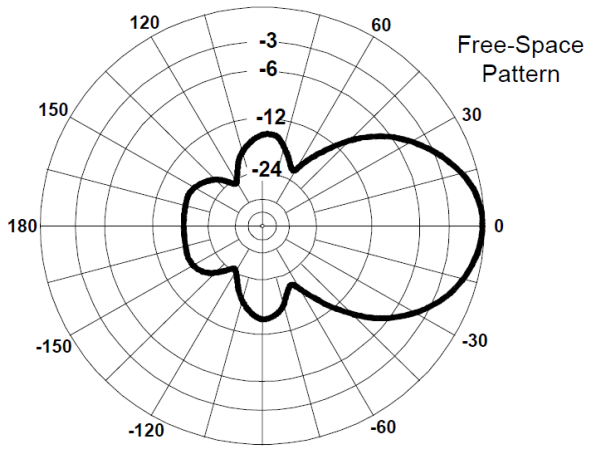

E9B02: The front-to-back ratio of the antenna radiation pattern shown in Figure E9-1 is 18 decibels.

Figure E9-1

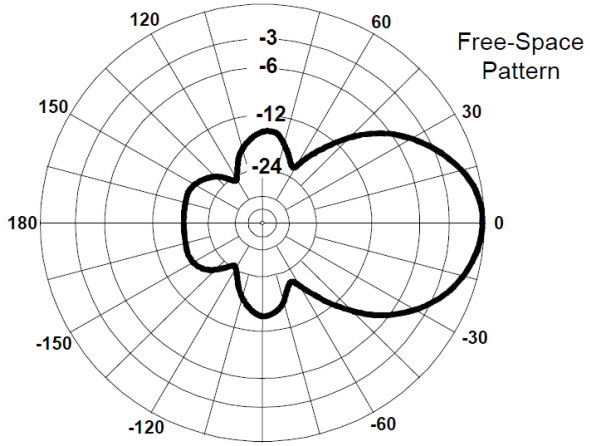

E9B03: The front-to-side ratio of the antenna radiation pattern shown in Figure E9-1 is 14 decibels.

E9B04: The front-to-back ratio of the radiation pattern shown in Figure E92 is 28 decibels.

Figure E9-2

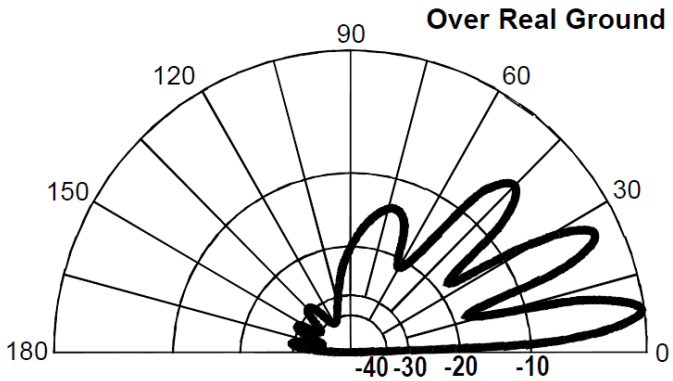

E9B05: What type of antenna pattern is shown in Figure E9-2: Elevation.

Figure E9-2

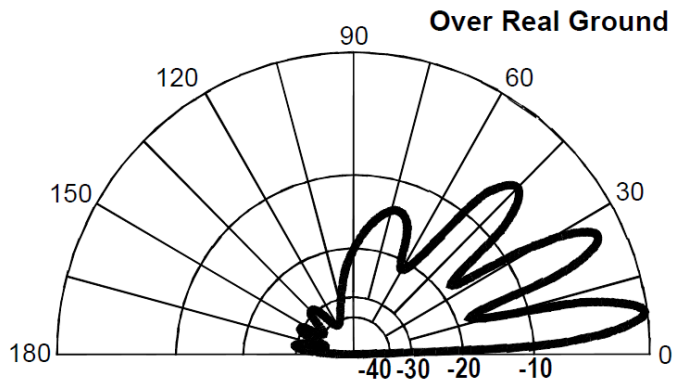

E9B06: The elevation angle of peak response in the antenna radiation pattern shown in Figure E9-2 is 7.5 degrees.

E9B07: The difference in radiated power between a lossless antenna with gain and an isotropic radiator driven by the same power is They are the same.

E9B08: The far field of an antenna is The region where the shape of the radiation pattern no longer varies with distance.

E9B09: What type of analysis is commonly used for modeling antennas: Method of Moments.

E9B10: The principle of a Method of Moments analysis is A wire is modeled as a series of segments, each having a uniform value of current.

E9B11: A disadvantage of decreasing the number of wire segments in an antenna model below 10 segments per half-wavelength is The computed feed point impedance may be incorrect.

Group E9C - Practical wire antennas; folded dipoles; phased arrays; effects of ground near antennas

E9C01: What type of radiation pattern is created by two quarter wavelength vertical antennas spaced half wavelength apart and fed 180 degrees out of phase: A figure-eight oriented along the axis of the array.

E9C02: What type of radiation pattern is created by two quarter wavelength vertical antennas spaced quarter wavelength apart and fed 90 degrees out of phase: Cardioid.

E9C03: What type of radiation pattern is created by two quarter wavelength vertical antennas spaced half wavelength apart and fed in phase: A figure-eight broadside to the axis of the array.

E9C04: What happens to the radiation pattern of an unterminated long wire antenna as the wire length is increased: Additional lobes form with major lobes increasingly aligned with the axis of the antenna.

E9C05: The purpose of feeding an off-center-fed dipole (OCFD) between the center and one end instead of at the midpoint is To create a similar feed point impedance on multiple bands.

E9C06: The effect of adding a terminating resistor to a rhombic or long-wire antenna is It changes the radiation pattern from bidirectional to unidirectional.

E9C07: The approximate feed point impedance at the center of a two-wire half-wave folded dipole antenna is 300 ohms.

E9C08: A folded dipole antenna is A half-wave dipole with an additional parallel wire connecting its two ends.

E9C09: Which of the following describes a G5RV antenna: A wire antenna center-fed through a specific length of open-wire line connected to a balun and coaxial feed line.

E9C10: Which of the following describes a Zepp antenna: An end-fed half-wavelength dipole.

E9C11: How is the far-field elevation pattern of a vertically polarized antenna affected by being mounted over seawater versus soil: Radiation at low angles increases.

E9C12: Which of the following describes an extended double Zepp antenna: A center-fed 1.25-wavelength dipole antenna.

E9C13: How does the radiation pattern of a horizontally polarized antenna vary with increasing height above ground: The takeoff angle of the lowest elevation lobe decreases.

E9C14: How does the radiation pattern of a horizontally-polarized antenna mounted above a long slope compare with the same antenna mounted above flat ground: The main lobe takeoff angle decreases in the downhill direction.

Group E9D - Yagi antennas; parabolic reflectors; feed point impedance and loading of electrically short antennas; antenna Q; RF grounding

E9D01: How much does the gain of an ideal parabolic reflector antenna increase when the operating frequency is doubled: 6 decibels.

E9D02: How can two linearly polarized Yagi antennas be used to produce circular polarization: Arrange two Yagis on the same axis and perpendicular to each other with the driven elements at the same point on the boom and fed 90 degrees out of phase.

E9D03: The most efficient location for a loading coil on an electrically short whip is Near the center of the vertical radiator.

E9D04: Because should antenna loading coils have a high ratio of reactance to resistance, To maximize efficiency.

E9D05: Approximately how long is a Yagi's driven element: half wavelength.

E9D06: What happens to SWR bandwidth when one or more loading coils are used to resonate an electrically short antenna: It is decreased.

E9D07: An advantage of top loading an electrically short high frequency vertical antenna is Improved radiation efficiency.

E9D08: What happens as the Q of an antenna increases: SWR bandwidth decreases.

E9D09: The function of a loading coil in an electrically short antenna is To resonate the antenna by cancelling the capacitive reactance.

E9D10: How does radiation resistance of a base-fed whip antenna change below its resonant frequency: Radiation resistance decreases.

E9D11: Because do most two-element Yagis with normal spacing have a reflector instead of a director, Higher gain.

E9D12: The purpose of making a Yagi's parasitic elements either longer or shorter than resonance is Control of phase shift.

Group E9E - Impedance matching: matching antennas to feed lines; phasing lines; power dividers

E9E01: Which matching system for Yagi antennas requires the driven element to be insulated from the boom: Beta or hairpin.

E9E02: What antenna matching system matches coaxial cable to an antenna by connecting the shield to the center of the antenna and the conductor a fraction of a wavelength to one side: Gamma match.

E9E03: What matching system uses a short length of transmission line connected in parallel with the feed line at or near the feed point: Stub match.

E9E04: The purpose of the series capacitor in a gamma match is To cancel unwanted inductive reactance.

E9E05: What Yagi driven element feed point impedance is required to use a beta or hairpin matching system: Capacitive (driven element electrically shorter than half wavelength).

E9E06: Which of these transmission line impedances would be suitable for constructing a quarter-wave Q-section for matching a 100-ohm feed point impedance to a 50-ohm transmission line: 75 ohms.

E9E07: What parameter describes the interaction of a load and transmission line: Reflection coefficient.

E9E08: A use for a Wilkinson divider is To divide power equally between two 50-ohm loads while maintaining 50-ohm input impedance.

E9E11: The purpose of using multiple driven elements connected through phasing lines is To control the antenna’s radiation pattern.

Group E9F - Transmission lines: characteristics of open and shorted feed lines; coax versus open wire; velocity factor; electrical length; coaxial cable dielectrics; microstrip

E9F01: The velocity factor of a transmission line is The velocity of a wave in the transmission line divided by the velocity of light in a vacuum.

E9F02: Which of the following has the biggest effect on the velocity factor of a transmission line: The insulating dielectric material.

E9F03: It is the electrical length of a coaxial cable longer than its physical length because Electromagnetic waves move more slowly in a coaxial cable than in air.

E9F04: What impedance does a half wavelength transmission line present to an radio frequency generator when the line is shorted at the far end: Very low impedance.

E9F05: Microstrip is Precision printed circuit conductors above a ground plane that provide constant impedance interconnects at microwave frequencies.

E9F06: The approximate physical length of an air-insulated, parallel conductor transmission line that is electrically half wavelength long at 14.10 megahertz is 10.6 meters.

E9F07: How does parallel conductor transmission line compare to coaxial cable with a plastic dielectric: Lower loss.

E9F08: Which of the following is a significant difference between foam dielectric coaxial cable and solid dielectric coaxial cable, assuming all other parameters are the same: All these choices are correct.

E9F09: What impedance does a quarter wavelength transmission line present to an radio frequency generator when the line is shorted at the far end: Very high impedance.

E9F10: What impedance does a 1 slash 8-wavelength transmission line present to an radio frequency generator when the line is shorted at the far end: An inductive reactance.

E9F11: What impedance does a 1 slash 8-wavelength transmission line present to an radio frequency generator when the line is open at the far end: A capacitive reactance.

E9F12: What impedance does a quarter wavelength transmission line present to an radio frequency generator when the line is open at the far end: Very low impedance.

Group E9G - The Smith chart

E9G01: Which of the following can be calculated using a Smith chart: Impedance along transmission lines.

E9G02: What type of coordinate system is used in a Smith chart: Resistance circles and reactance arcs.

E9G03: Which of the following is often determined using a Smith chart: Impedance and SWR values in transmission lines.

E9G04: The two families of circles and arcs that make up a Smith chart are Resistance and reactance.

E9G05: Which of the following is a common use for a Smith chart: Determine the length and position of an impedance matching stub.

Figure E9-3

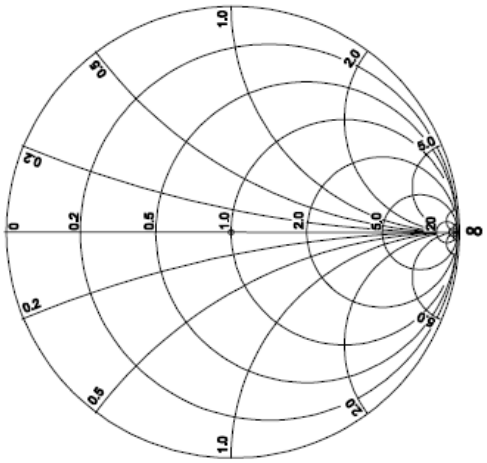

E9G06: On the Smith chart shown in Figure E9-3, what is the name for the large outer circle on which the reactance arcs terminate: Reactance axis.

Figure E9-3

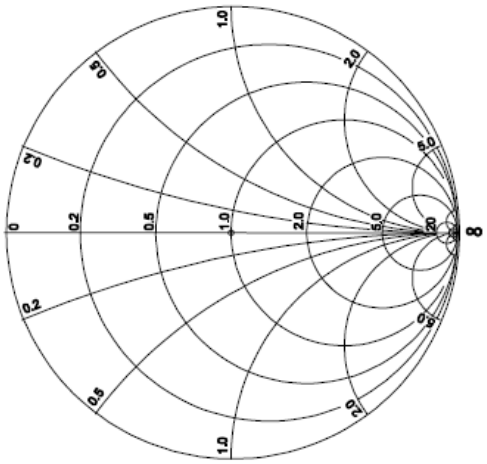

E9G07: On the Smith chart shown in Figure E9-3, what is the only straight line shown: The resistance axis.

E9G08: How is a Smith chart normalized: Reassign the prime center's impedance value.

E9G09: What third family of circles is often added to a Smith chart during the process of designing impedance matching networks: Constant-SWR circles.

E9G10: What do the arcs on a Smith chart represent: Points with constant reactance.

E9G11: In what units are the wavelength scales on a Smith chart calibrated: In fractions of transmission line electrical wavelength.

Group E9H - Receiving antennas: radio direction finding (RDF) techniques; Beverage antennas; single- and multiple-turn loops

E9H01: When constructing a Beverage antenna, which of the following factors should be included in the design to achieve good performance at the desired frequency: It should be at least one wavelength long.

E9H02: Which is generally true for 160- and 80-meter receiving antennas: Atmospheric noise is so high that directivity is much more important than losses.

E9H03: Receiving directivity factor (RDF) is Peak antenna gain compared to average gain over the hemisphere around and above the antenna.

E9H04: The purpose of placing an electrostatic shield around a small-loop direction-finding antenna is It eliminates unbalanced capacitive coupling to the antenna's surroundings, improving the depth of its nulls.

E9H05: What challenge is presented by a small wire-loop antenna for direction finding: It has a bidirectional null pattern.

E9H06: What indicates the correct value of terminating resistance for a Beverage antenna: Minimum variation in SWR over the desired frequency range.

E9H07: The function of a Beverage antenna's termination resistor is Absorb signals from the reverse direction.

E9H08: The function of a sense antenna is It modifies the pattern of a DF antenna to provide a null in only one direction.

E9H09: What type of radiation pattern is created by a single-turn, terminated loop such as a pennant antenna: Cardioid.

E9H10: How can the output voltage of a multiple-turn receiving loop antenna be increased: By increasing the number of turns and slash or the area enclosed by the loop.

E9H11: What feature of a cardioid pattern antenna makes it useful for direction-finding antennas: A single null.

SUBELEMENT E0 - Safety

Group E0A - Safety: RF radiation hazards; hazardous materials; grounding

E0A01: The primary function of an external earth connection or ground rod is Lightning charge dissipation.

E0A02: When evaluating radio frequency exposure levels from your station at a neighbor's home, what must you do: Ensure signals from your station are less than the uncontrolled maximum permissible exposure (MPE) limits.

E0A03: Over what range of frequencies are the Federal Communications Commission human body radio frequency exposure limits most restrictive: 30 - 300 megahertz.

E0A04: When evaluating a site with multiple transmitters operating at the same time, the operators and licensees of which transmitters are responsible for mitigating over-exposure situations: Each transmitter that produces 5 percent or more of its MPE limit in areas where the total MPE limit is exceeded.

E0A05: What hazard is created by operating at microwave frequencies: The high gain antennas commonly used can result in high exposure levels.

E0A06: They are there separate electric (E) and magnetic (H) MPE limits at frequencies below 300 megahertz because All these choices are correct.

E0A07: "100% tie-off" regarding tower safety means At least one lanyard attached to the tower at all times.

E0A08: What does SAR measure: The rate at which radio frequency energy is absorbed by the body.

E0A09: Which of the following types of equipment are exempt from radio frequency exposure evaluations: Hand-held transceivers sold before May 3, 2021.

E0A10: When must an radio frequency exposure evaluation be performed on an amateur station operating on 80 meters: An evaluation must always be performed.

E0A11: To what should lanyards be attached while climbing: Tower legs.

E0A12: Where should a shock-absorbing lanyard be attached to a tower when working above ground: Above the climber's head level.