Elec 240 Fall 2025
PCB Lab

Test performed:

Report submitted: September 10, 2025

[ ]

Mini-Theremin

The goal of this project was to create a Mini-Theremin. A theremin is a musical device that is played without physical contact from the performer. They are very cool devices, and I recently discovered them after attending La Femme's concert in Houston. A typical theremin has two antennas, with each one serving as one half of a capacitor. Then, by moving your hand near the antennas, you effectively change the systems capacitance, thereby altering the frequency or amplitude of the output sound.

YouTube: THEREMIN - Over The Rainbow

The Mini-Theremin seeks to replicate this behavior, although on a much simpler and more compact scale. As demonstrated in this video, a copper plate can substitute for the theremin's antenna rods because touching the plate increases its capacitance to ground. Then, by attaching this plate to a Schmitt Tigger Oscillator, as described here, we can smoothly change the frequency of the output sound. This works because in a Schmitt Trigger Oscillators, increasing the capacitance lengthens the time constant, thereby lowering the frequency.

My Design

Table 1: Bill of Materials

Reference	**Qty**	**Value**	**Footprint**
Cbase1	1	220 pF	240Library:CAP_YX_6P3X11_RUB
Cbulk1	1	10 µF	240Library:CAP_YX_6P3X11_RUB
Cdec1, Cref1	2	0.1 µF	240Library:CAP_YX_6P3X11_RUB
J1	1	Conn_01x02	240Library:HARWIN_M20-9990246
LS1	1	Speaker	240Library:XDCR_AT-1224-TWT-5V-2-R
Q1	1	2N7000	240Library:TO220AB_VIS
R3, R4, Rg1, Rpd1	4	100 k	240Library:K104K10X7RF5UH5_VIS
Rf1	1	200 k	240Library:K104K10X7RF5UH5_VIS
Rgate1, RLS1	2	100	240Library:K104K10X7RF5UH5_VIS
Rosc1	1	2.2 M	240Library:K104K10X7RF5UH5_VIS
TOUCH_PAD1	1	TOUCH_PAD	Therminim:Touch_Pad_30x30mm
U1	1	LM358	240Library:DIP794W45P254L959H508Q8

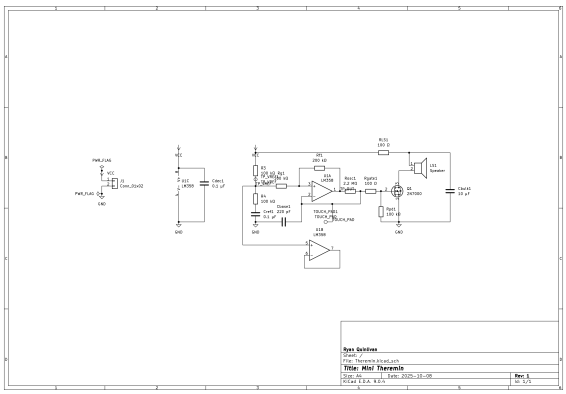

(a) Schematic

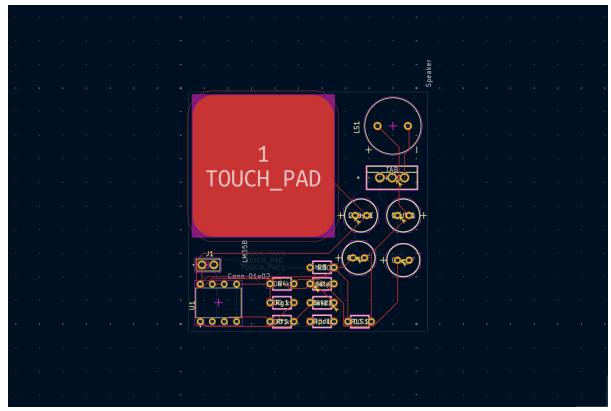

(b) PCB Layout

Figure 1: Schematic and PCB design of the Mini-Theremin

My design incorporates both of these design principles to create the Mini-Theremin. Following this design, we can create a Schmitt Trigger using a 555. Then, I connected the oscillator output to an amplifier that drives the speaker. The 555 timer's output passes through a small resistor to the 2N7000 MOSFET, which acts as a switch. As the oscillator toggles, the MOSFET switches on and off at the oscillation frequency, producing an audible tone through the speaker. Thus, the Mini-Theremin is complete, having combined a plate, a 555 Schmitt trigger, and a MOSFET amplified speaker.

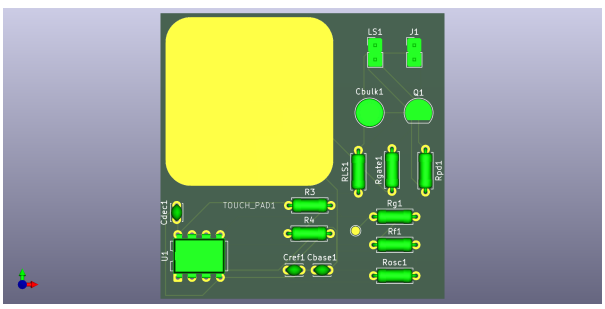

(a) Front of Mini-Theremin

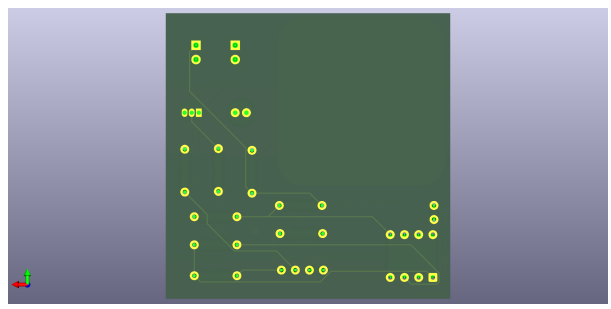

(b) Back of Mini-Theremin

Figure 2: Completed Mini-Theremin device: front and back views