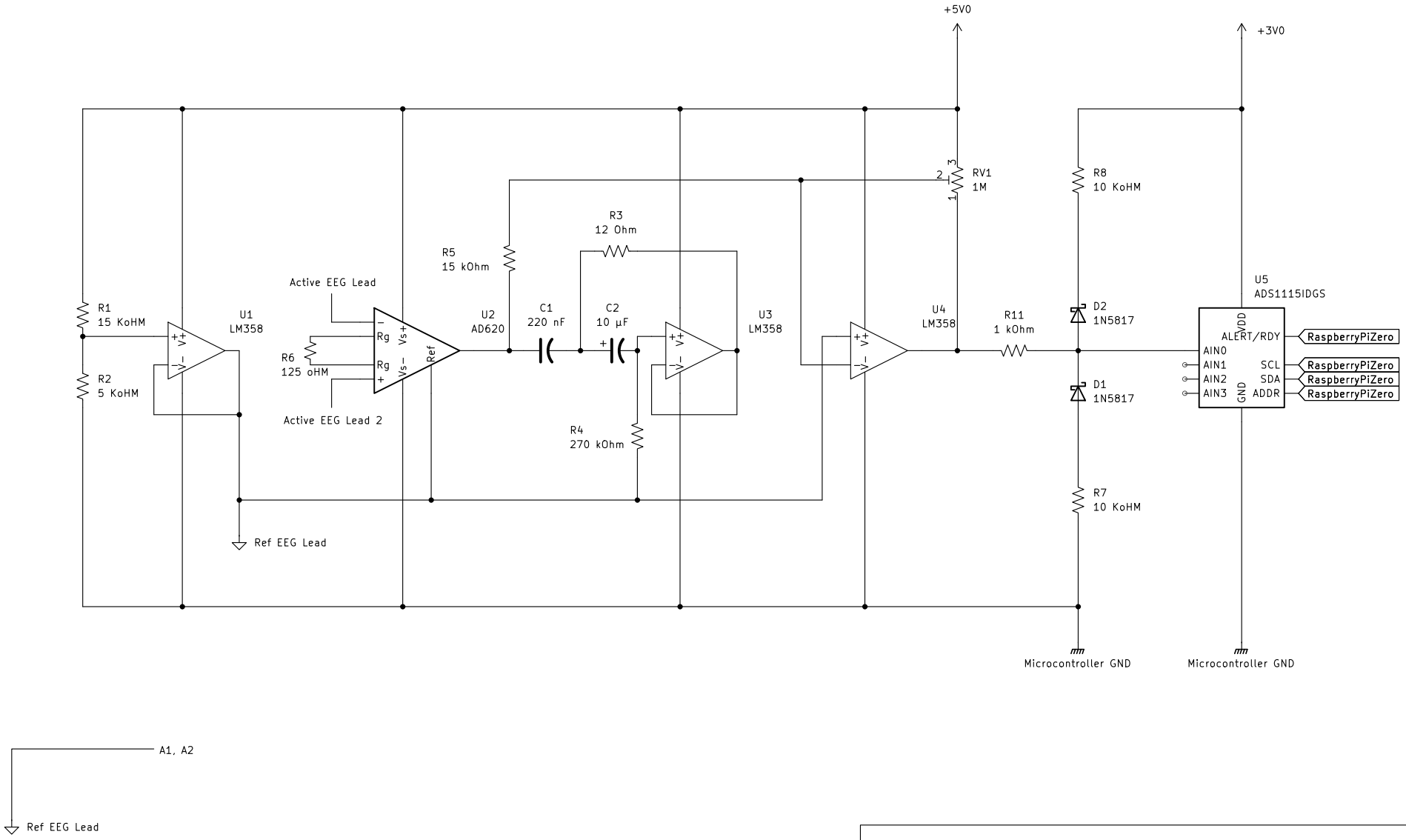

Set 1M Pot to 500 kOhm before starting circuit and adjusting
Center signal around 1.5V
Leeway to adjust R2 as long as virtual GND close to 1.5

Sheet: /
File: EEG_Circuit.kicad_sch

Title: EEG Circuit

Size: A4	Date: 2025-08-26	**Rev: 5**
KiCad E.D.A. 9.0.3		Id: 1/1