CPE 464 Lab 1 **Worksheet**

Name: Ryan Cramer Lab Section (please circle): 9am Noon 3pm

Please fill in the cabling and the IP addresses in the network diagrams below. When you have completed each diagram, please have your TA sign off on your diagram.

Network Diagram
Connecting your workgroup to the Internet

Patch Panel Port Number: 24

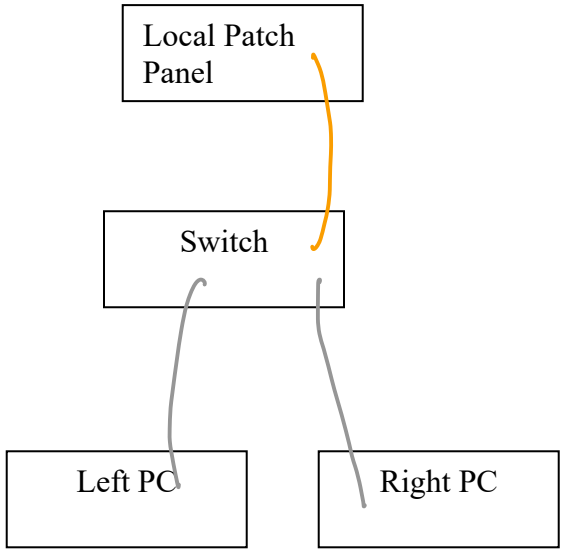

Left PC

IP address: 208.94.60.88

Subnet Mask: 255.255.255.0

Default Gateway Address: 208.94.60.254

Right PC

IP address: 208.94.60.89

Subnet Mask: 255.255.255.0

Default Gateway Address: 208.94.60.254

TA: _____

(TA initials for both pinging an Internet site and finished network diagram)

Connecting to other Workgroups (Phase 1)
4 PCs using Switches

Your Group's Configuration

Partner Group's Configuration

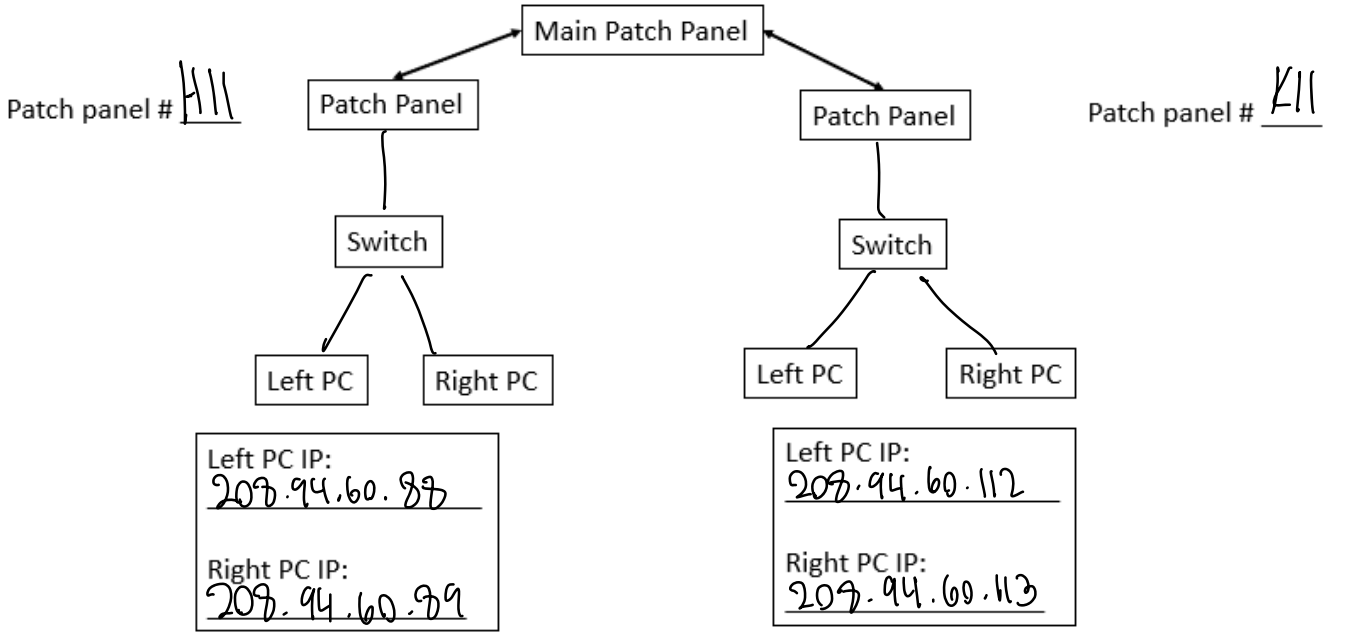

Subnet Mask used by all PCs: 255.255.255.0

TA: _____

(TA initials for pinging between all computers and finished network diagram)