Chapter I: Introduction

- Systems
- Control systems
  - Types of control systems
  - Why closed-loop control?
- Control system design flow chart
- Course overview

Systems (I)

- The concept of a system
  - Can be considered as a “processor” that deals with signals (e.g., inputs and outputs)

- Throughout this course, we’ll deal with
  - LTI systems (linear time-invariant systems)
  - Input/output relationship (transfer function)
  - SISO (single-input, single-output) systems
  - Output feedback

Systems (II)

- Why do we study LTI systems
  - Most systems can be approximated by LTI systems under certain conditions
  - Easy to analyze with graphical tools
    - Root locus
    - Bode plot
    - Nyquist criterion

Systems (III)

- More in graduate/technical elective courses:
  - Controller/observer design in state space
  - Nonlinear systems
  - Time varying systems
  - MIMO (multi-input, multi-output) systems

Control Systems (I)

- Control systems
  - An interconnection of components forming a configuration that will provide a desired response
  - The controller is usually in series connection with the system to be controlled (“plant”)
  - Types of control systems
    - Open-loop vs. closed-loop

Control Systems (II)

- Open-loop control (no feedback)
  - Using an actuating device to control the process directly

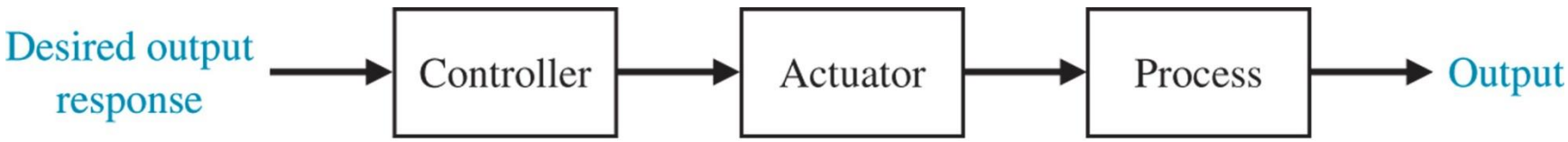

Copyright © 2011 Pearson Education, Inc. publishing as Prentice Hall

- Closed-loop control (with feedback)
  - Feedback the measurement of process output
  - Compare the “actual” output with a “desired” reference signal

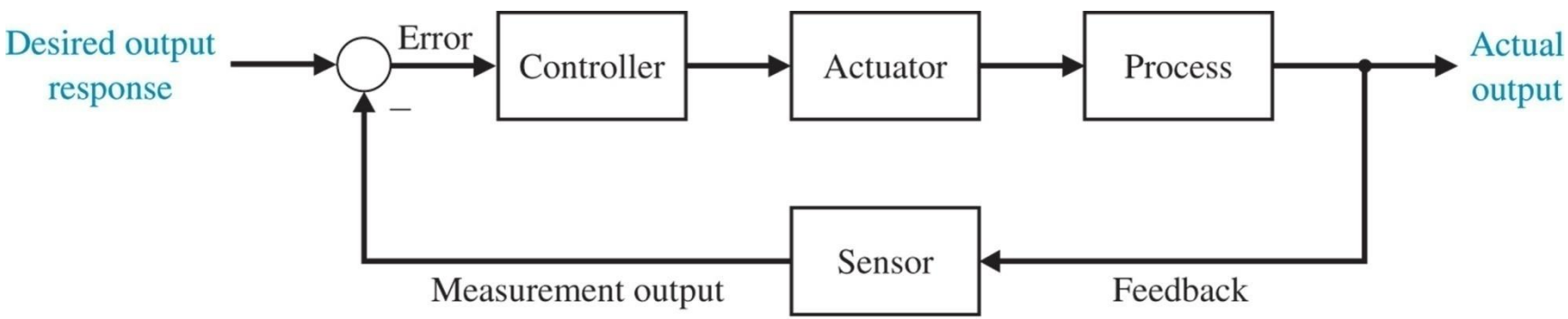

Copyright © 2011 Pearson Education, Inc. publishing as Prentice Hall

Control Systems (III)

- Any practical systems may be affected by external disturbances/noises
- Why closed-loop (feedback) control?
  - Can reject external disturbances and reduce noise (note feedback control may introduce additional sensor noise). Chapter 4
  - Can improve system performance (e.g., faster response, lower steady-state error, etc.). Chapter 5

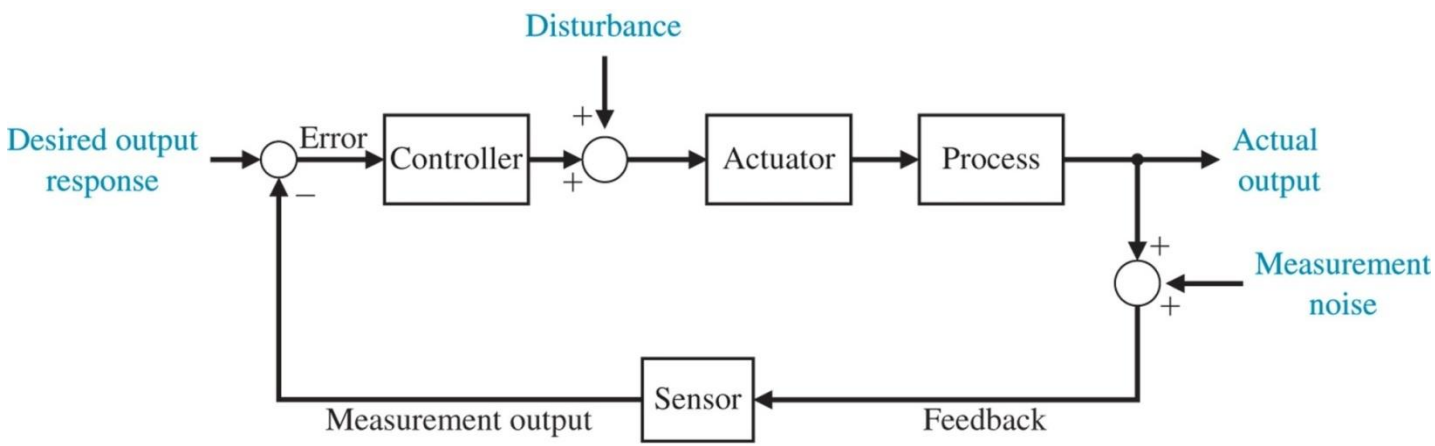

Copyright © 2011 Pearson Education, Inc. publishing as Prentice Hall

Control Systems (IV)

- Why is negative feedback control <u>often</u> used?
  - By comparing the actual output with the reference input, a control signal can be generated to reduce the error signal

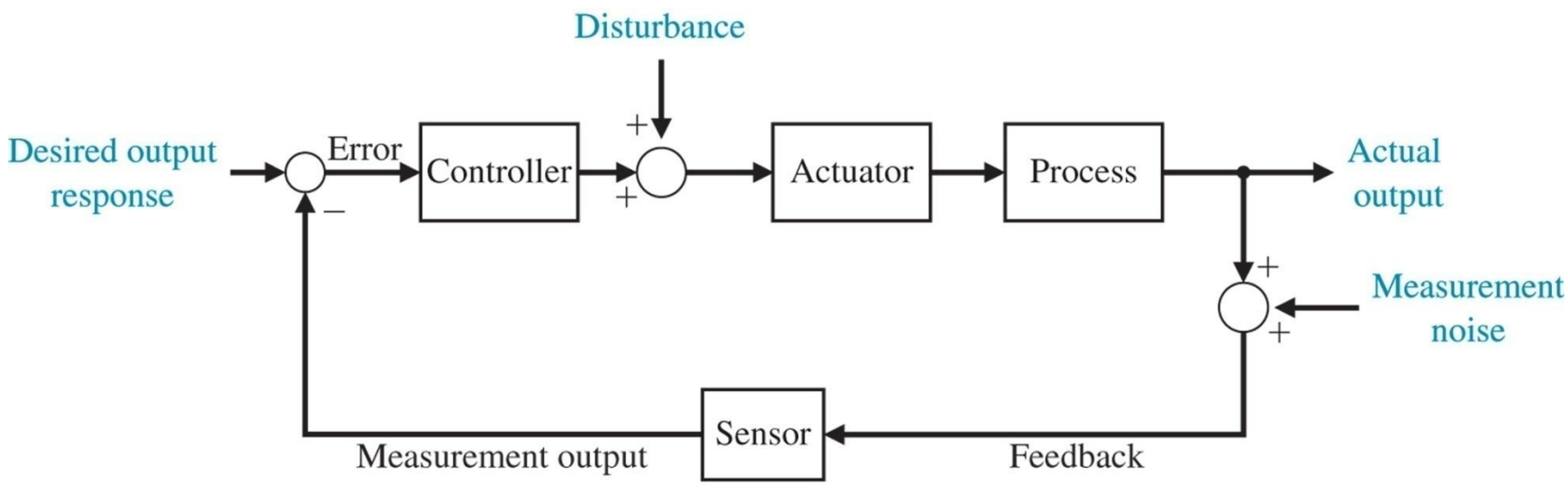

Copyright © 2011 Pearson Education, Inc. publishing as Prentice Hall

Example I

- A toaster with a timer is an open-loop system
  - The time required to make a “good toast” is pre-set by user, not included as part of the system
- A “sophisticated” closed-loop toaster should be able to
  - Continuously or periodically measure the “quality” of the toast being baked and adjust cooking time accordingly
  - Turn itself off when the toast is fully baked

Example II

- An Automobile steering control system

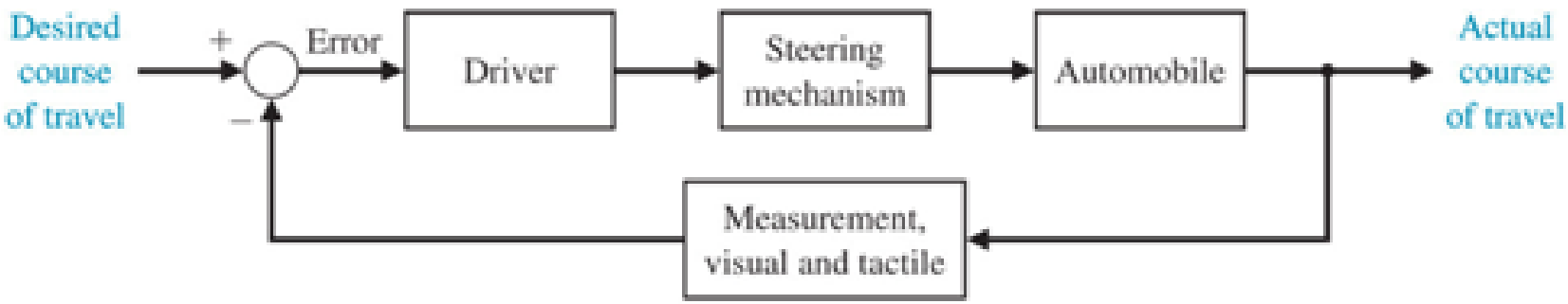

The driver uses the difference between the actual and the desired direction of travel to generate a controlled adjustment of the steering wheel

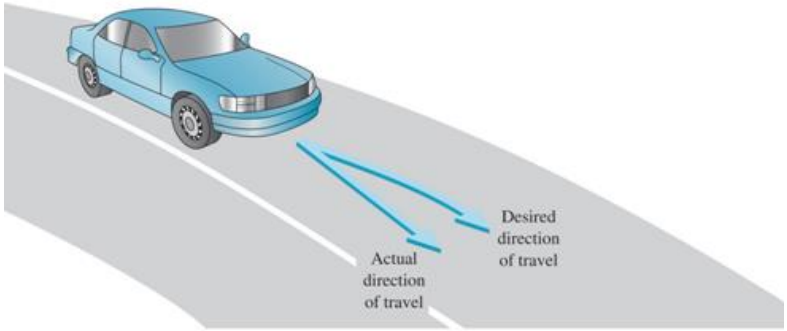

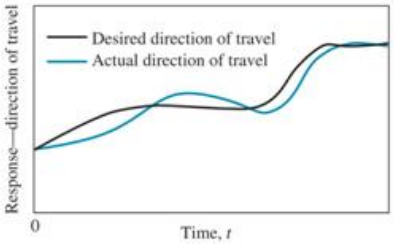

Example III

- Elevator operation in a building
  - Assumption: only one button can be pressed at a time
  - Input: the button pressed in the elevator
  - Output: the physical floor location of the elevator

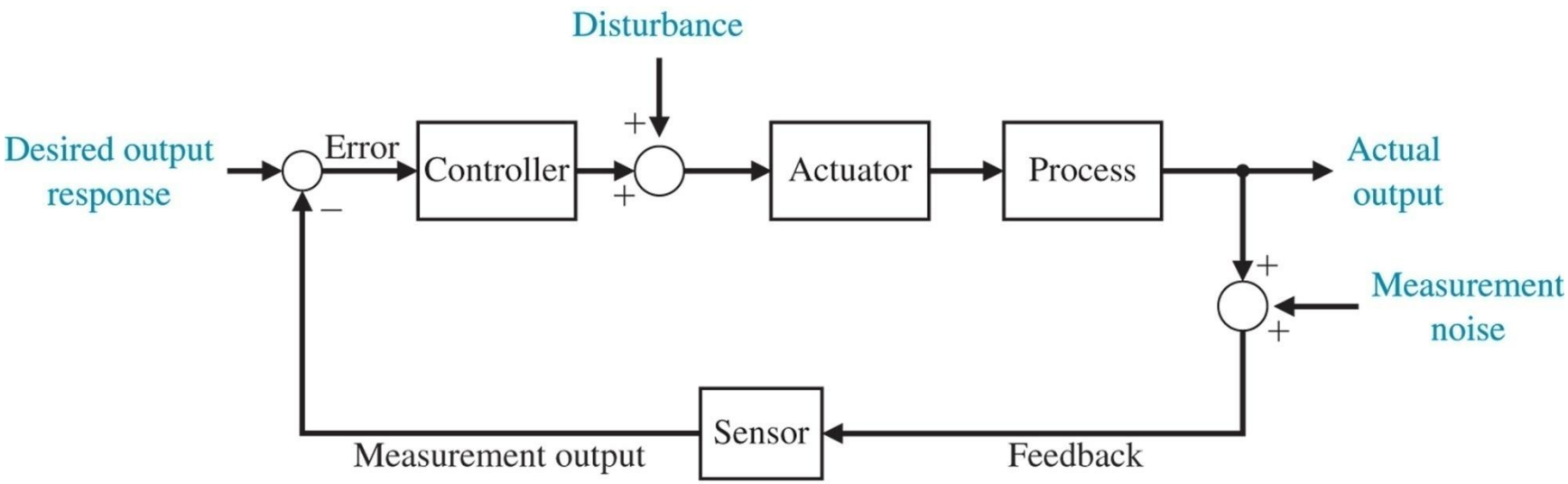

Copyright © 2011 Pearson Education, Inc. publishing as Prentice Hall

Control System Design

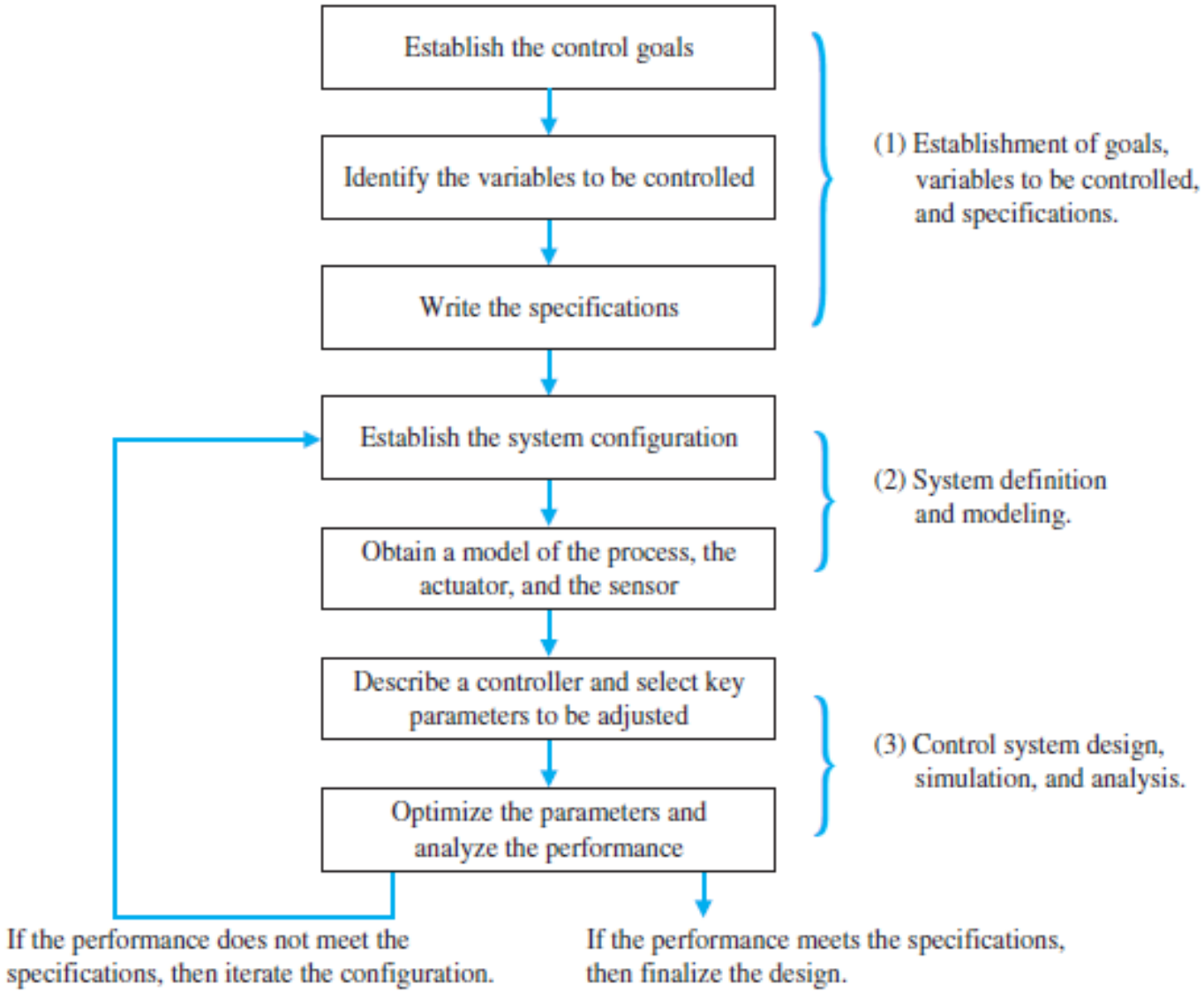

History – From Classical Control to Modern Control, to Intelligent Control

- Classical Control (1920 – 1960)
  - Linear, SISO system
  - Transfer function
  - Bode Plot (1938), Root Locus (1948)
- Modern Control (1960 – 1980)
  - Linear/Nonlinear, MIMO
  - State variable and state space
  - Dynamic Programming (Bellman, 1957), Kalman filter (1960), Adaptive Control (Astrom et. al., 1970s)
- Intelligent Control (1980 – Present)

Hendrik Bode

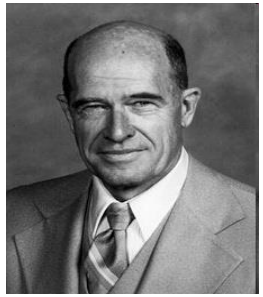

Walter Evans

Richard Bellman

Rudolf Kalman

Course overview

- Major topics:
  - Chapters 1, 2: Introduction and background
  - Chapters 4, 5, 6: Feedback systems
    - Performance indexes
    - Stability
  - Chapters 7: Root locus method
  - Chapters 8: Frequency response method (Bode plot)
  - Chapter 9: Stability in frequency domain (Nyquist)
  - Chapter 10: Controller design
    - Lead/lag compensators
  - Chapter 3: State variables (if time permits)