Chapter 2: Mathematical Models of Systems

- Modeling physical systems using differential equations
- The Laplace transform
  - Transfer function
  - Solving differential equations
- The second order systems
  - Damping ratio and natural frequency
  - Impulse and step response
- Block diagram and signal-flow models
  - Mason's formula

Modeling

- The concept of modeling
  - To develop a mathematical model to describe a physical system in real world
- Two types of modeling
  - Analytical modeling
    - Find the model using physical rules and mathematical equations (e.g., differential equations, etc.)
  - Experimental modeling
    - Find the coefficients of a known model (via experiment or measurement data), e.g., find $h(i)$ for

$$y(k) = \sum_{i=0}^{N-1} h(i)u(k-i)$$

Modeling Physical Systems Using Differential Equations

- Procedure
  - Identify input/output variables
  - Make assumptions if necessary
  - Formulate the model using physical rules (e.g., Newton's law, Kirchhoff's current law, etc.)
  - Linearize the model if necessary
    - What is a linear system?
    - Taylor series expansion for linear approximation near the operating point

Examples

- A spring-mass damper
  - *k*: spring constant; *b*: friction constant

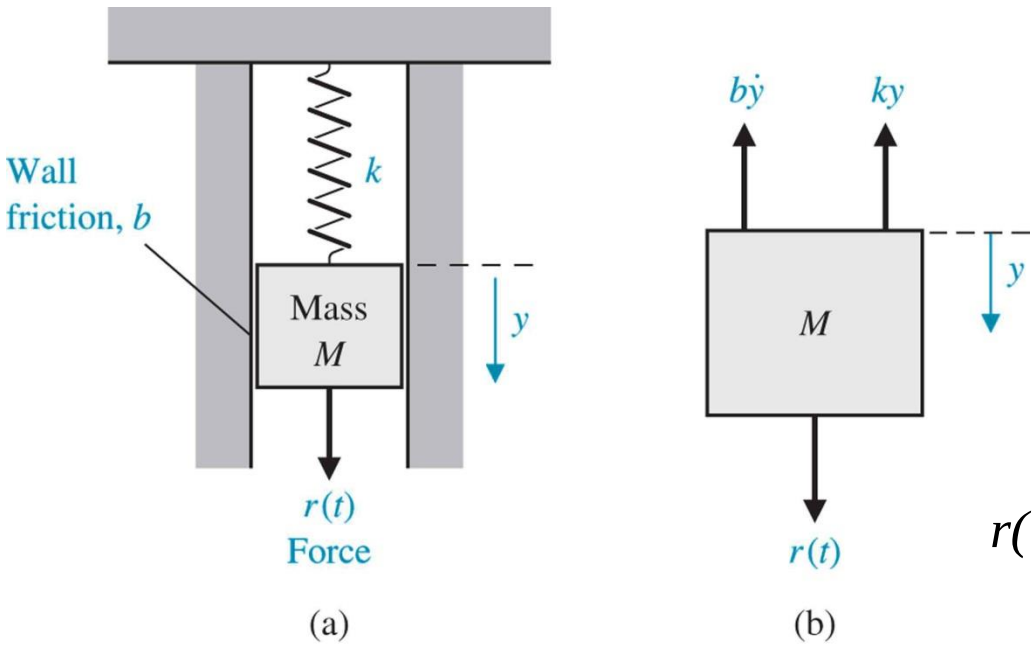

y: displacement

$$r(t) - b\frac{dy}{dt} - ky + Mg = M\frac{d^2y}{dt^2}$$

- A RLC circuit

Writing Equations for System Modeling

- Write the result in the form of a differential equation
  - The general form of a differential equation

$$y^{(n)}(t) + a_1 y^{(n-1)}(t) + \cdots + a_n y(t) = b_0 x^{(m)}(t) + b_1 x^{(m-1)}(t) + \cdots + b_m x(t)$$

- Normalize the differential equation
  - The coefficient in front of the term with the highest order of derivative should be 1

The Laplace Transform

- Definition: $x(t) \leftrightarrow X(s)$

  $$X(s) = \int_{0-}^{\infty} x(t) e^{-st}\, dt \qquad s = \sigma + j\omega$$

- ROC (region of convergence)
  - The range of σ that makes $x(t)e^{-\sigma t}$ absolutely integrable

Laplace Transform Pairs (EE 228)

Table 11.1 A Short Table of Laplace Transforms

Entry	$x(t)$	$X(s)$	Entry	$x(t)$	$X(s)$
1	$\delta(t)$	1	10	$t\cos(\beta t)u(t)$	$\frac{s^2-\beta^2}{(s^2+\beta^2)^2}$
2	$u(t)$	$\frac{1}{s}$	11	$t\sin(\beta t)u(t)$	$\frac{2s\beta}{(s^2+\beta^2)^2}$
3	$r(t)=tu(t)$	$\frac{1}{s^2}$	12	$\cos^2(\beta t)u(t)$	$\frac{s^2+2\beta^2}{s(s^2+4\beta^2)}$
4	$t^2u(t)$	$\frac{2}{s^3}$	13	$\sin^2(\beta t)u(t)$	$\frac{2\beta^2}{s(s^2+4\beta^2)}$
5	$t^nu(t)$	$\frac{n!}{s^{n+1}}$	14	$e^{-\alpha t}\cos(\beta t)u(t)$	$\frac{s+\alpha}{(s+\alpha)^2+\beta^2}$
6	$e^{-\alpha t}u(t)$	$\frac{1}{s+\alpha}$	15	$e^{-\alpha t}\sin(\beta t)u(t)$	$\frac{\beta}{(s+\alpha)^2+\beta^2}$
7	$te^{-\alpha t}u(t)$	$\frac{1}{(s+\alpha)^2}$	16	$te^{-\alpha t}\cos(\beta t)u(t)$	$\frac{(s+\alpha)^2-\beta^2}{[(s+\alpha)^2+\beta^2]^2}$
8	$t^ne^{-\alpha t}u(t)$	$\frac{n!}{(s+\alpha)^{n+1}}$	17	$te^{-\alpha t}\sin(\beta t)u(t)$	$\frac{2\beta(s+\alpha)}{[(s+\alpha)^2+\beta^2]^2}$
9	$\cos(\beta t)u(t)$	$\frac{s}{s^2+\beta^2}$	18	$\sin(\beta t)u(t)$	$\frac{\beta}{s^2+\beta^2}$

Laplace Transform Pairs I (Textbook)

Table 2.3 Important Laplace Transform Pairs

$f(t)$	$F(s)$
Step function, $u(t)$	$\frac{1}{s}$
e^{-at}	$\frac{1}{s+a}$
$\sin \omega t$	$\frac{\omega}{s^2+\omega^2}$
$\cos \omega t$	$\frac{s}{s^2+\omega^2}$
t^n	$\frac{n!}{s^{n+1}}$
$f^{(k)}(t) = \frac{d^k f(t)}{dt^k}$	$s^k F(s) - s^{k-1} f(0^-) - s^{k-2} f'(0^-) - \ldots - f^{(k-1)}(0^-)$

Copyright © 2011 Pearson Education, Inc. publishing as Prentice Hall

Laplace Transform Pairs II (Textbook)

$\int_{-\infty}^{t} f(t)\,dt$	$\frac{F(s)}{s} + \frac{1}{s}\int_{-\infty}^{0} f(t)\,dt$
Impulse function $\delta(t)$	1
$e^{-at}\sin\omega t$	$\frac{\omega}{(s+a)^2+\omega^2}$
$e^{-at}\cos\omega t$	$\frac{s+a}{(s+a)^2+\omega^2}$
$\frac{1}{\omega}[(\alpha-a)^2+\omega^2]^{1/2}e^{-at}\sin(\omega t+\phi)$, $\phi = \tan^{-1}\frac{\omega}{\alpha-a}$	$\frac{s+\alpha}{(s+a)^2+\omega^2}$
$\frac{\omega_n}{\sqrt{1-\zeta^2}}e^{-\zeta\omega_n t}\sin\omega_n\sqrt{1-\zeta^2}t,\ \zeta<1$	$\frac{\omega_n^2}{s^2+2\zeta\omega_n s+\omega_n^2}$
$\frac{1}{a^2+\omega^2}+\frac{1}{\omega\sqrt{a^2+\omega^2}}e^{-at}\sin(\omega t-\phi)$, $\phi = \tan^{-1}\frac{\omega}{-a}$	$\frac{1}{s[(s+a)^2+\omega^2]}$
$1-\frac{1}{\sqrt{1-\zeta^2}}e^{-\zeta\omega_n t}\sin\left(\omega_n\sqrt{1-\zeta^2}t+\phi\right)$, $\phi = \cos^{-1}\zeta,\ \zeta<1$	$\frac{\omega_n^2}{s(s^2+2\zeta\omega_n s+\omega_n^2)}$
$\frac{\alpha}{a^2+\omega^2}+\frac{1}{\omega}\left[\frac{(\alpha-a)^2+\omega^2}{a^2+\omega^2}\right]^{1/2}e^{-at}\sin(\omega t+\phi)$. $\phi = \tan^{-1}\frac{\omega}{\alpha-a}-\tan^{-1}\frac{\omega}{-a}$	$\frac{s+\alpha}{s[(s+a)^2+\omega^2]}$

Copyright © 2011 Pearson Education, Inc. publishing as Prentice Hall

Properties (EE 228)

Table 11.2 Operational Properties of the Laplace Transform

Note: $x(t)$ is to be regarded as the *causal* signal $x(t)u(t)$.			
Entry	**Property**	$x(t)$	$X(s)$
1	Superposition	$\alpha x_1(t) + \beta x_2(t)$	$\alpha X_1(s) + \beta X_2(s)$
2	Times-exp	$e^{-\alpha t}x(t)$	$X(s+\alpha)$
3	Times-cos	$\cos(\alpha t)x(t)$	$0.5[X(s+j\alpha) + X(s-j\alpha)]$
4	Times-sin	$\sin(\alpha t)x(t)$	$j0.5[X(s+j\alpha) - X(s-j\alpha)]$
5	Time Scaling	$x(\alpha t),\ \alpha > 0$	$\frac{1}{\alpha}X\left(\frac{s}{\alpha}\right)$
6	Time Shift	$x(t-\alpha)u(t-\alpha),\ \alpha > 0$	$e^{-\alpha s}X(s)$
7	Times-t	$tx(t)$	$-\frac{dX(s)}{ds}$
8		$t^n x(t)$	$(-1)^n \frac{d^n X(s)}{ds^n}$
9	Derivative	$x'(t)$	$sX(s) - x(0-)$
10		$x''(t)$	$s^2X(s) - sx(0-) - x'(0-)$
11		$x^{(n)}(t)$	$s^nX(s) - s^{n-1}x(0-) - \cdots - x^{n-1}(0-)$
12	Integral	$\int_{0-}^{t} x(t)\,dt$	$\frac{X(s)}{s}$
13	Convolution	$x(t) \star h(t)$	$X(s)H(s)$
14	Switched periodic, $x_1(t)$ = first period	$x_p(t)u(t)$	$\frac{X_1(s)}{1-e^{-sT}}$, $T =$ time period of $x(t)$
Laplace Transform Theorems			
15	Initial value	$x(0+) = \lim_{s\to\infty}[sX(s)]$ (if $X(s)$ is strictly proper)	
16	Final value	$x(t)\|_{t\to\infty} = \lim_{s\to 0}[sX(s)]$ (if poles of $X(s)$ lie in LHP)	

The Transfer Function (I)

- Consider a relaxed LTI system: *h(t)* $\leftrightarrow$ *H(s)*

$$Y(s) = X(s)H(s) \qquad \text{or} \qquad H(s) = \frac{Y(s)}{X(s)}$$

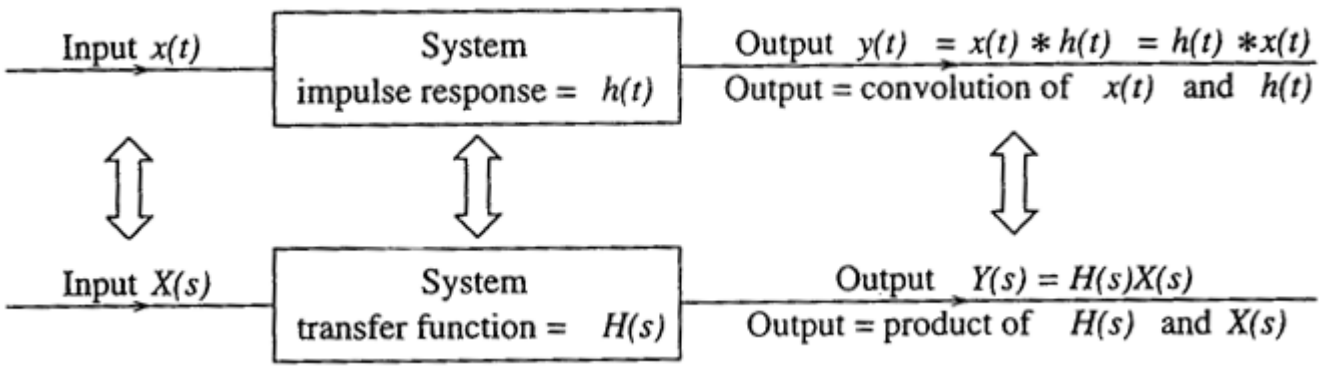

- Differential equation

$$y^{(n)}(t) + a_1 y^{(n-1)}(t) + \cdots + a_{n-1} y^{(1)}(t) + a_n y(t)$$
$$= b_0 x^{(m)}(t) + b_1 x^{(m-1)}(t) + \cdots + b_{m-1} x^{(1)}(t) + b_m x(t)$$

$$H(s) = \frac{Y(s)}{X(s)} = \frac{b_0 s^M + b_1 s^{M-1} + \cdots + b_M}{s^N + a_1 s^{N-1} + \cdots + a_N}$$

The Transfer Function (II)

- Poles and zeros: $H(s)=N(s)/D(s)$

$$H(s) = \frac{b_0 s^M + b_1 s^{M-1} + \cdots + b_M}{s^N + a_1 s^{N-1} + \cdots + a_N} = K\frac{(s-z_1)(s-z_2)\cdots(s-z_M)}{(s-p_1)(s-p_2)\cdots(s-p_N)}$$

  – Zeros: $N(s) = 0$

  – Poles: $D(s) = 0$

- BIBO Stability and Transfer Function

  – $H(s)$ must be **<u>strictly proper</u>** AND all the poles are in LHP

The Inverse Laplace Transform (I)

- Definition: $$x(t) = \frac{1}{2\pi j}\int_{\sigma-j\infty}^{\sigma+j\infty} X(s)e^{st}\,ds$$
- PFE (partial fraction expansion)
  - *X(s)* should be strictly proper
  - Distinct factors:

$$X(s) = \frac{P(s)}{(s+p_1)(s+p_2)\cdots(s+p_N)} = \frac{K_1}{s+p_1} + \frac{K_2}{s+p_2} + \cdots + \frac{K_N}{s+p_N}$$

$$K_m = (s+p_m)X(s)\Big|_{s=-p_m}$$

  - Repeated factors:

$$X(s) = \frac{P(s)}{(s+p_1)(s+r)^k} = \frac{K_1}{s+p_1} + \frac{A_0}{(s+r)^k} + \frac{A_1}{(s+r)^{k-1}} + \cdots + \frac{A_{k-1}}{s+r}$$

$$A_0 = (s+r)^k X(s)\Big|_{s=-r} \qquad A_2 = \frac{1}{2!}\frac{d^2}{ds^2}\left[(s+r)^k X(s)\right]\Big|_{s=-r}$$

$$A_1 = \frac{d}{ds}\left[(s+r)^k X(s)\right]\Big|_{s=-r} \qquad A_n = \frac{1}{n!}\frac{d^n}{ds^n}\left[(s+r)^k X(s)\right]\Big|_{s=-r}$$

The Inverse Laplace Transform (II)

Table 11.3 Inverse Laplace Transforms of Partial Fraction Expansion Terms

Entry	Partial Fraction Expansion Term	Inverse Transform
1	$\dfrac{K}{s+\alpha}$	$Ke^{-\alpha t}u(t)$
2	$\dfrac{K}{(s+\alpha)^n}$	$\dfrac{K}{(n-1)!}t^{n-1}e^{-\alpha t}u(t)$
3	$\dfrac{Cs+D}{(s+\alpha)^2+\beta^2}$	$e^{-\alpha t}\left[C\cos(\beta t)+\dfrac{D-\alpha C}{\beta}\sin(\beta t)\right]u(t)$
4	$\dfrac{A+jB}{s+\alpha+j\beta}+\dfrac{A-jB}{s+\alpha-j\beta}$	$2e^{-\alpha t}[A\cos(\beta t)+B\sin(\beta t)]u(t)$
5	$\dfrac{A+jB}{(s+\alpha+j\beta)^n}+\dfrac{A-jB}{(s+\alpha-j\beta)^n}$	$\dfrac{2}{(n-1)!}t^{n-1}e^{-\alpha t}[A\cos(\beta t)+B\sin(\beta t)]u(t)$
6	$\dfrac{M\angle\theta}{s+\alpha+j\beta}+\dfrac{M\angle-\theta}{s+\alpha-j\beta}$	$2Me^{-\alpha t}\cos(\beta t-\theta)u(t)$
7	$\dfrac{M\angle\theta}{(s+\alpha+j\beta)^n}+\dfrac{M\angle-\theta}{(s+\alpha-j\beta)^n}$	$\dfrac{2M}{(n-1)!}t^{n-1}e^{-\alpha t}\cos(\beta t-\theta)u(t)$

PFE (I)

For simple (single) poles

$$X(s) = \frac{P(s)}{(s+p_1)(s+p_2)\cdots(s+p_N)}$$

$$= \frac{K_1}{s+p_1} + \frac{K_2}{s+p_2} + \cdots + \frac{K_N}{s+p_N}$$

$$\Rightarrow (s+p_1)X(s) = K_1 + \frac{K_2(s+p_1)}{s+p_2} + \cdots + \frac{K_N(s+p_1)}{s+p_N}$$

$$\left[(s+p_1)X(s)\right]_{s=-p_1} = K_1 + 0 + \cdots + 0$$

$$\Rightarrow K_1 = \left[(s+p_1)X(s)\right]_{s=-p_1}$$

PFE (II)

For multiple (repeated) poles

$$X(s)=\frac{A_0}{(s+r)^K}+\frac{A_1}{(s+r)^{K-1}}+\frac{A_2}{(s+r)^{K-2}}+\frac{A_3}{(s+r)^{K-3}}+\frac{A_4}{(s+r)^{K-4}}+\cdots+\frac{A_{K-1}}{s+r}+others$$

$$\Rightarrow X(s)(s+r)^K=A_0+A_1(s+r)+A_2(s+r)^2+A_3(s+r)^3+A_4(s+r)^4+\cdots$$

$$+\cdots+A_{K-1}(s+r)^{K-1}+(others)(s+r)^K$$

$$\left[X(s)(s+r)^K\right]_{s=-r}=A_0+0+0+0+0+\cdots+0 \qquad \Rightarrow A_0=\left[X(s)(s+r)^K\right]_{s=-r}$$

$$\frac{d}{ds}\left[X(s)(s+r)^K\right]=A_1+2A_2(s+r)+3A_3(s+r)^2+4A_4(s+r)^3\cdots$$

$$\frac{d}{ds}\left[X(s)(s+r)^K\right]\Big|_{s=-r}=A_1+0+0+\cdots+0 \qquad \Rightarrow A_1=\frac{d}{ds}\left[X(s)(s+r)^K\right]\Big|_{s=-r}$$

$$\frac{d^2}{ds^2}\left[X(s)(s+r)^K\right]=2A_2+6A_3(s+r)+12A_4(s+r)^2+\cdots \qquad \Rightarrow A_2=\frac{1}{2!}\frac{d^2}{ds^2}\left[X(s)(s+r)^K\right]\Big|_{s=-r}$$

$$\frac{d^3}{ds^3}\left[X(s)(s+r)^K\right]=6A_3+24A_4(s+r)+\cdots \qquad \Rightarrow A_3=\frac{1}{3!}\frac{d^3}{ds^3}\left[X(s)(s+r)^K\right]\Big|_{s=-r}$$

Find LTI System Response (Solving ODE) Using Laplace Transform (I)

- Find the <u>zero-input</u> and <u>zero-state</u> response separately
  - Set <u>input = 0</u>, taking Laplace transform on both sides of ODE using non-zero I.C., then find inverse transform
  - Set <u>I.C. = 0</u>, taking Laplace transform on both sides of ODE, then find inverse transform
- Find <u>total</u> system response
  - Apply Laplace transform on both sides of ODE (with input terms and non-zero I.C.), then find inverse transform, ***<u>OR</u>***
  - Add zero-input and zero-state response together

Find LTI System Response (Solving ODE) Using Laplace Transform (II)

- Laplace transform

$x'(t)$	$sX(s) - x(0-)$
$x''(t)$	$s^2X(s) - sx(0-) - x'(0-)$
$x^{(n)}(t)$	$s^nX(s) - s^{n-1}x(0-) - \cdots - x^{n-1}(0-)$

For zero IC: $x^{(n)}(t) \Leftrightarrow s^nX(s)$

- Inverse Laplace transform

Inverse Transformation of $X(s)$ Relies on Partial Fractions and Table Look-Up

Distinct roots: $X(s) = \prod_{m=1}^{N} \frac{K_m}{s+p_m} = \sum_{m=1}^{N} \frac{P(s)}{s+p_m}$, where $K_m = (s+p_m)X(s)|_{s=-p_m}$

Repeated: $\frac{1}{(s+r)^k} \prod_{m=1}^{N} \frac{P(s)}{s+p_m} = \sum_{m=1}^{N} \frac{K_m}{s+p_m} + \sum_{n=0}^{k-1} \frac{A_n}{(s+r)^{k-n}}$ $\quad A_n = \frac{1}{n!} \frac{d^n}{ds^n} \left[(s+r)^k X(s)\right]\Big|_{s=-r}$

Example

- A system can be described by a differential equation: $y''(t) + 3y'(t) + 2y(t) = x(t)$
  - Find the transfer function;
  - Determine stability;
  - Find the impulse response;
  - Find the zero-input response for y(0) = 2, y'(0) = 1;
  - Find the zero-state response and the final value when input $x(t) = e^{-t}u(t)$

Final Value Theorem

$$x(t)|_{t\to\infty} = \lim_{s\to 0}[sX(s)] \quad \text{(if poles of } X(s) \text{ lie in LHP)}$$

Circuit Analysis Using Laplace Transform (I)

- Find the “transformed” circuit
  - Replace every inductor/capacitor with the corresponding impedance model
  - Replace every independent voltage/current source with the Laplace transform of signal
- All the circuit analysis methods are still valid
  - e.g., node/mesh analysis, Thevenin/Norton equivalent, etc.

Circuit Analysis Using Laplace Transform (II)

		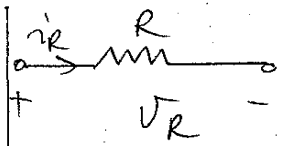	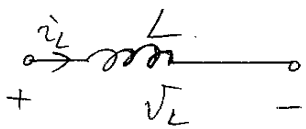	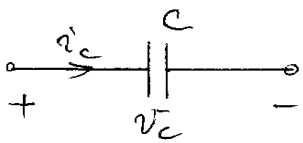
Time Domain		$v_R = R\, i_R$ $i_R = \frac{v_R}{R}$	$v_L(t) = L\frac{di_L(t)}{dt}$ $i_L(t) = \frac{1}{L}\int_{0_-}^{t} v_L(\tau)d\tau + i_L(0_-)$	$v_C(t) = \frac{1}{C}\int_0^t i_C(\tau)d\tau + v_C(0^-)$ $i_C(t) = C\frac{d\,v_C(t)}{dt}$
S-Domain (Frequency Domain)	Impedence	$R(\Omega)$	$sL\ (\Omega)$	$\frac{1}{sC}\ (\Omega)$
	I.C. = 0	$V_R(s) = R\,I_R(s)$ $I_R(s) = \frac{V_R(s)}{R}$ (No I.C.)	$V_L(s) = L\,s\,I(s)$ $I_L(s) = \frac{V(s)}{sL}$	$V_C(s) = \frac{1}{sC}I_C(s)$ $I_C(s) = (Cs)V_C(s)$
	I.C. ≠ 0		$V_L(s) = L[sI_L(s) - i_L(0^-)]$ $= LsI_L(s) - Li_L(0^-)$ 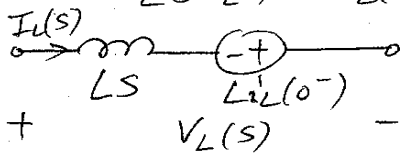	$V_C(s) = \frac{1}{sC}I_C(s) + \frac{v_C(0^-)}{s}$ 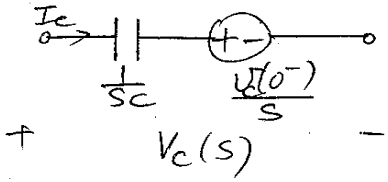
			$I_L(s) = \frac{V_L(s)}{sL} + \frac{i_L(0^-)}{s}$ 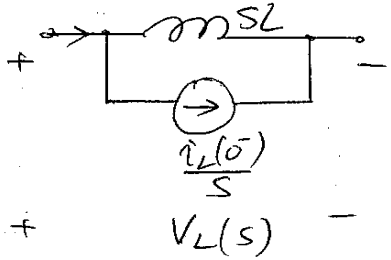	$I_C(s) = C[sV_C(s) - v_C(0^-)]$ $= (sC)V_C(s) - C\,v_C(0^-)$ 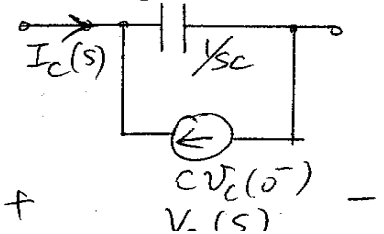

Laplace Transform Property

$x'(t)$	$sX(s) - x(0-)$
$x''(t)$	$s^2X(s) - sx(0-) - x'(0-)$
$x^{(n)}(t)$	$s^nX(s) - s^{n-1}x(0-) - \cdots - x^{n-1}(0-)$

System Modeling - Ideal Op-Amp

- Ideal op-amp: $i_1 = i_2 = 0, \quad v_1 = v_2$

  $v_0 = K(v_2 - v_1), \quad K \to \infty$

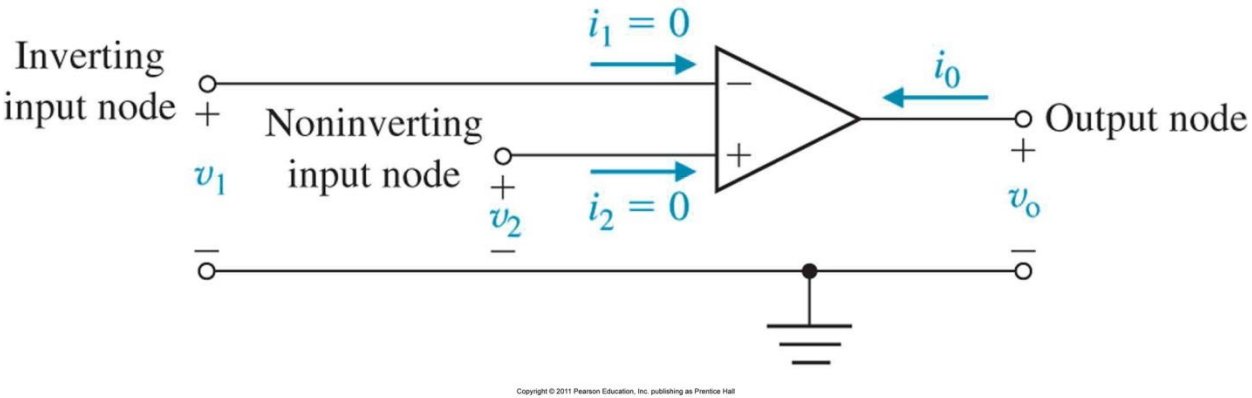

- Example: Inverting amplifier

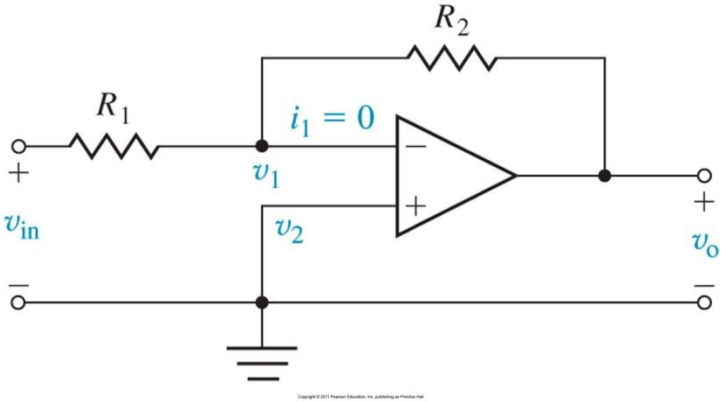

$$\frac{v_0}{v_{in}} = -\frac{R_2}{R_1}$$

System Modeling - Typical Op-Amp Applications

- Integrating circuit

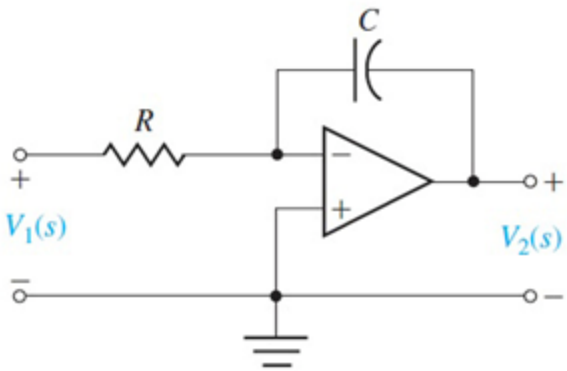

$$\frac{V_2(s)}{V_1(s)} = -\frac{1}{RCs}$$

- Differentiating circuit

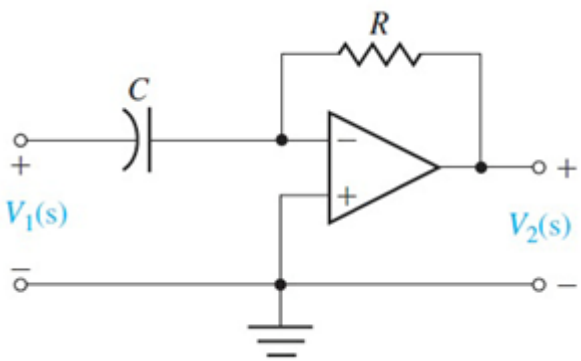

$$\frac{V_2(s)}{V_1(s)} = -RCs$$

Example

- Find the transfer function for the following ideal op-amp circuit, $R_1 = R_2 = 100$ KΩ, $C_1 = 10$ μF, $C_2 = 5$ μF
  Write the transfer function in the form

$$H(s) = K\frac{(s-z_1)(s-z_2)\cdots(s-z_M)}{(s-p_1)(s-p_2)\cdots(s-p_N)}$$

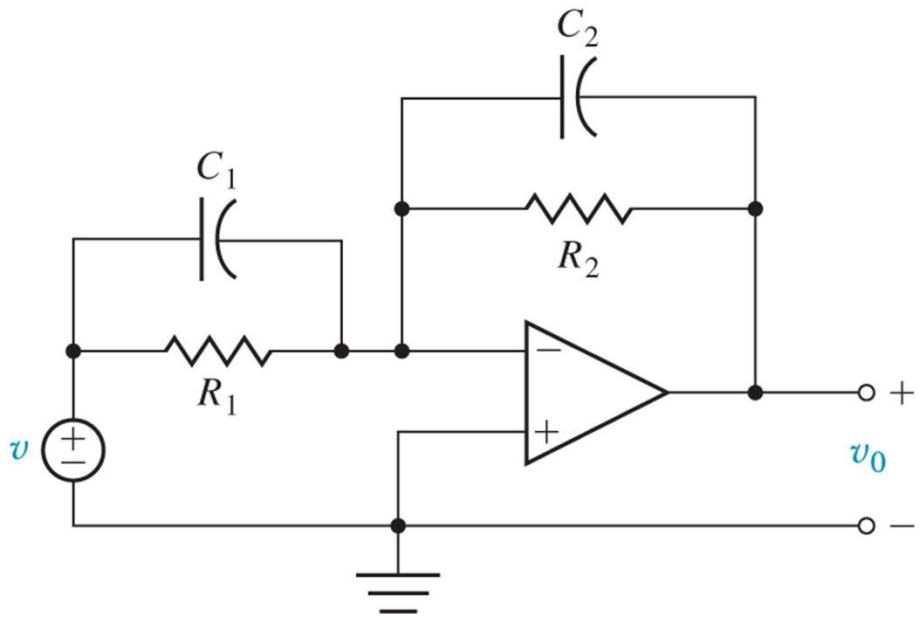

Copyright © 2011 Pearson Education, Inc. publishing as Prentice Hall

The Transient Response of Second-order Systems

$$H(s) = \frac{\omega_n^2}{s^2 + 2\varsigma\omega_n s + \omega_n^2}$$

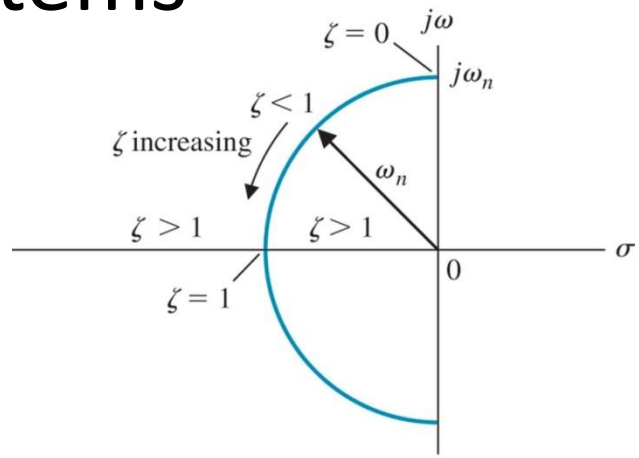

- Parameters
  - Damping ratio ς: ς ≥ 0
  - Natural frequency: ω_n
- Types of systems
  - Un-damped: ς = 0, $s = \pm j\omega_n$
  - Under-damped: 0 < ς < 1

$$s = -\zeta\omega_n \pm j\omega_n\sqrt{1-\zeta^2}$$

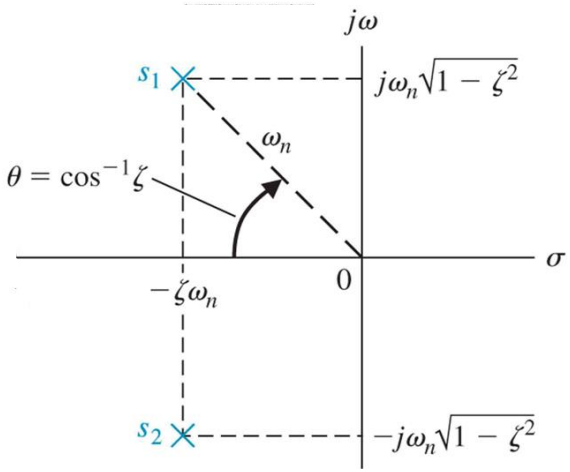

  - Critically damped: ς = 1, $s = -\omega_n$, $-\omega_n$
  - Over-damped: ς > 1, $s = -\zeta\omega_n \pm \omega_n\sqrt{\zeta^2 - 1}$

Second-order System Impulse Response

$$H(s) = \frac{\omega_n^2}{s^2 + 2\varsigma\omega_n s + \omega_n^2}$$

- If ς = 0 (un-damped)

$$h(t) = \omega_n \sin(\omega_n t)\, u(t)$$

- If 0 < ς < 1 (under-damped)

$$h(t) = \frac{\omega_n}{\sqrt{1-\zeta^2}} e^{-\zeta\omega_n t} \sin(\omega_n \sqrt{1-\zeta^2}\, t)\, u(t)$$

$$(\text{note} \quad \zeta \neq 1)$$

- If ς = 1 (critically damped)

$$h(t) = \omega_n^2\, t\, e^{-\omega_n t}\, u(t)$$

- If ς > 1 (over-damped)

$$H(s) = \frac{K_1}{s+p_1} + \frac{K_2}{s+p_2}; \qquad h(t) = K_1 e^{-p_1 t} + K_2 e^{-p_2 t}$$

where $p_1, p_2 = -\zeta\omega_n \pm \omega_n \sqrt{\zeta^2 - 1}$ real values

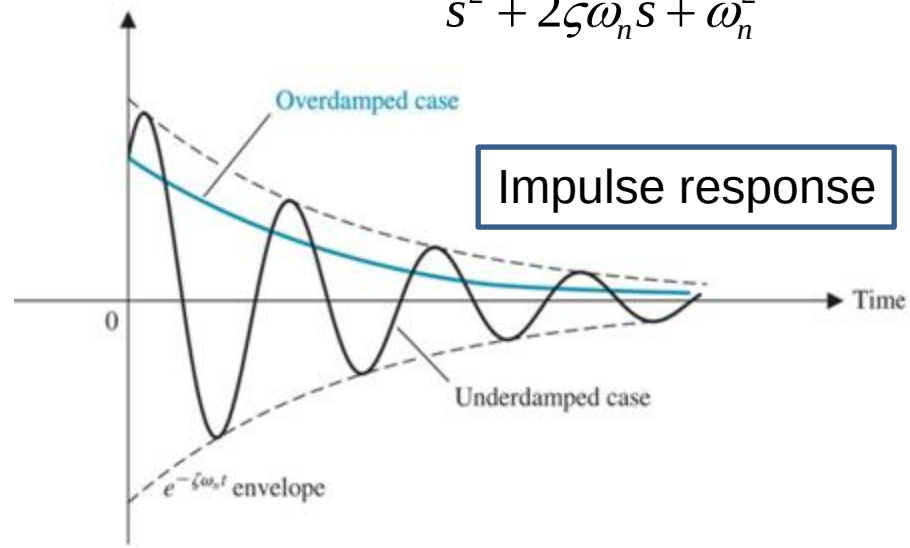

Laplace Transform Pair

$te^{-\alpha t}u(t)$	$\frac{1}{(s+\alpha)^2}$
$\sin(\beta t)u(t)$	$\frac{\beta}{s^2+\beta^2}$

Second-order System Step Response (I)

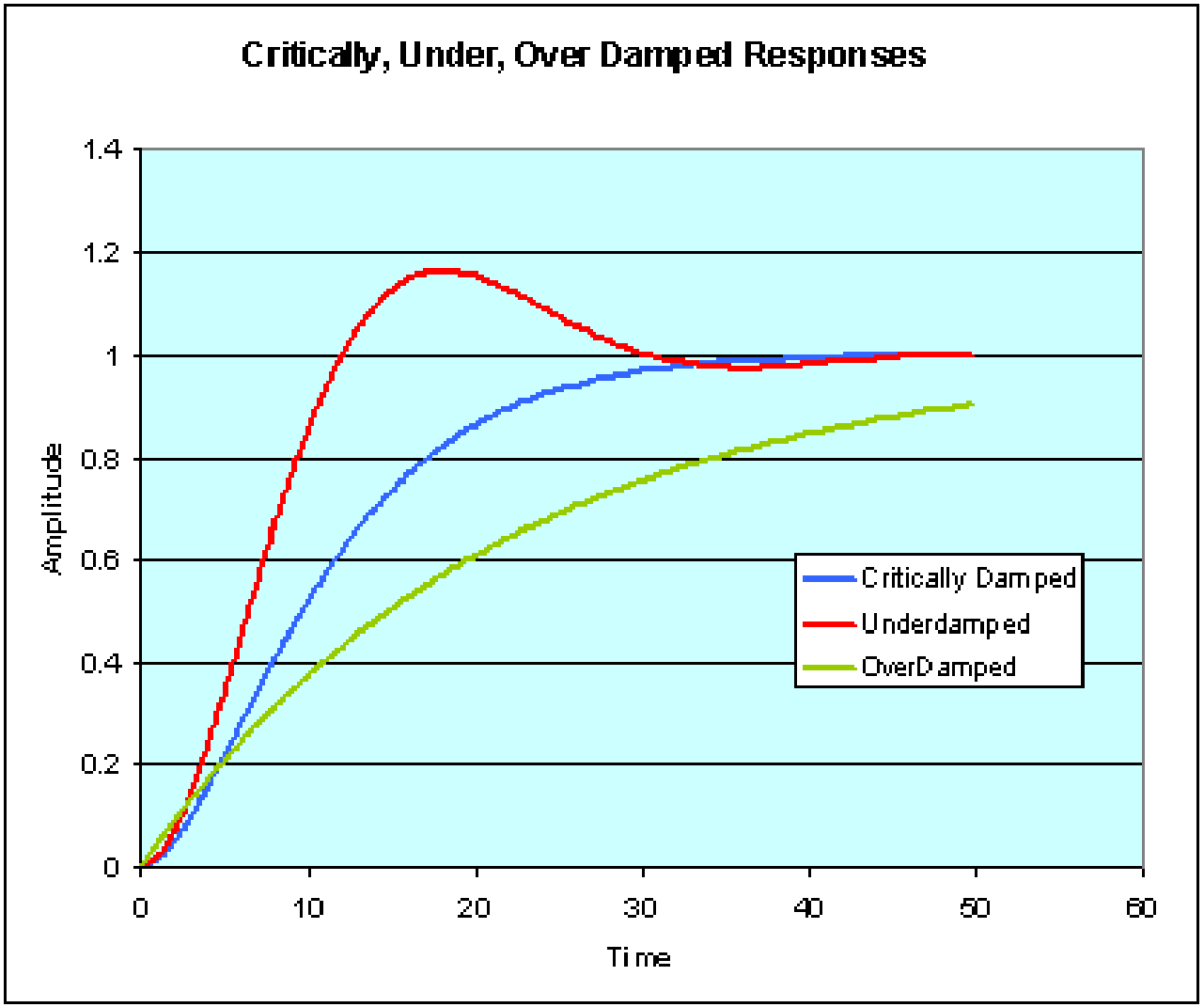

Second-order System Step Response (II)

$$H(s)=\frac{\omega_n^2}{s^2+2\varsigma\omega_n s+\omega_n^2};\quad 0<\zeta<1 \Rightarrow \text{Impulse Response: } h(t)=\frac{\omega_n^2}{\sqrt{1-\zeta^2}}e^{-\zeta\omega_n t}\sin(\omega_n\sqrt{1-\zeta^2}\,t)u(t)$$

$$\text{Unit Step Response: } y(t)=u(t)-\frac{1}{\sqrt{1-\zeta^2}}e^{-\zeta\omega_n t}\sin(\omega_n\sqrt{1-\zeta^2}\,t+\theta)u(t);\quad \text{where } \theta=\cos^{-1}(\zeta)$$

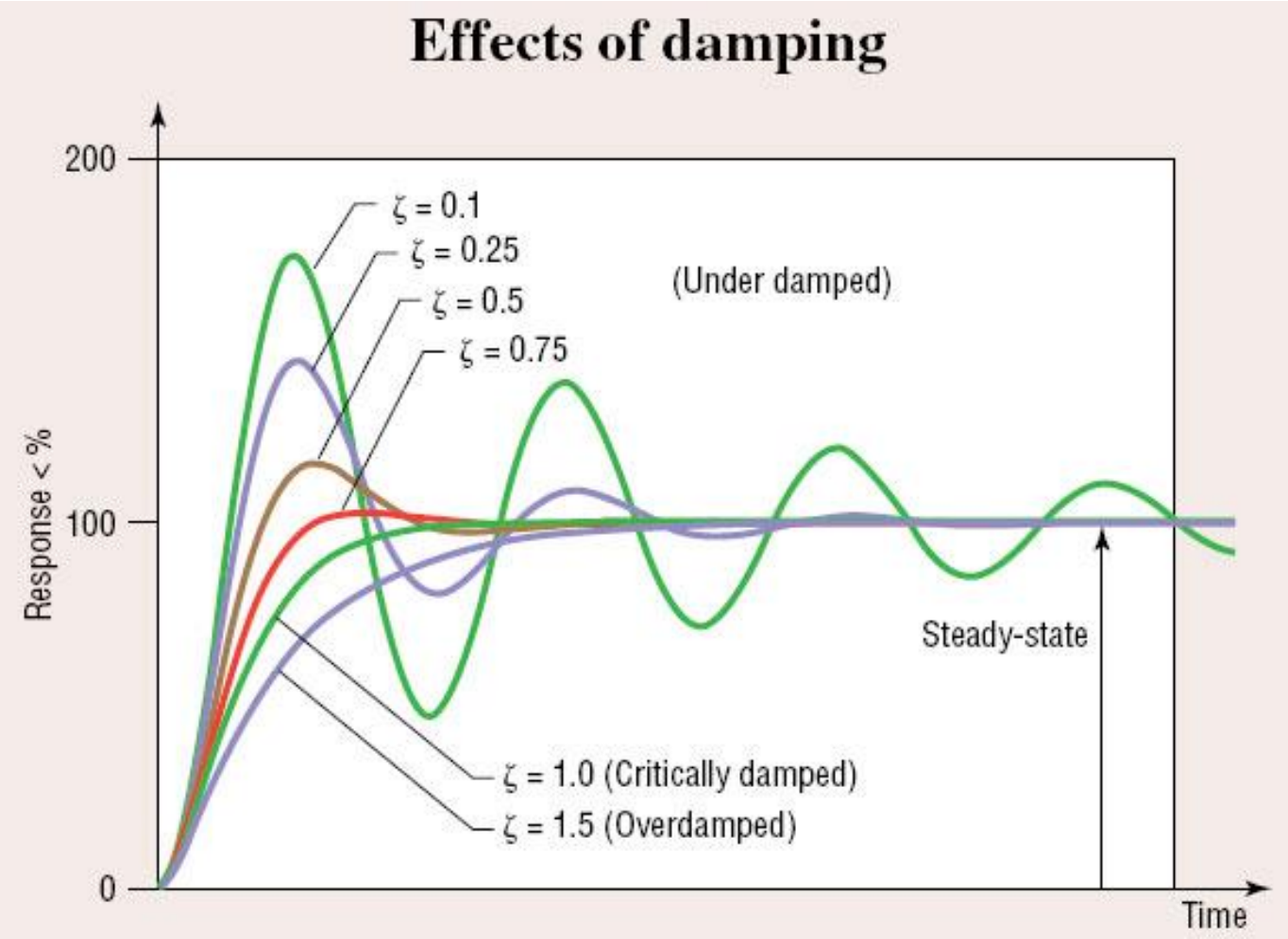

Block Diagram Representation

- A block diagram may include
  - Input/output variables
  - Operational blocks (transfer functions)
  - Signal flow directions
  - Adders
  - Gain (constant)

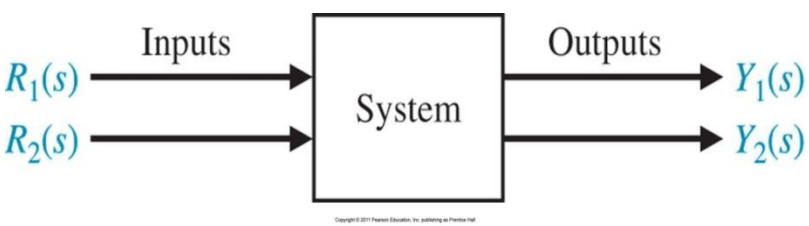

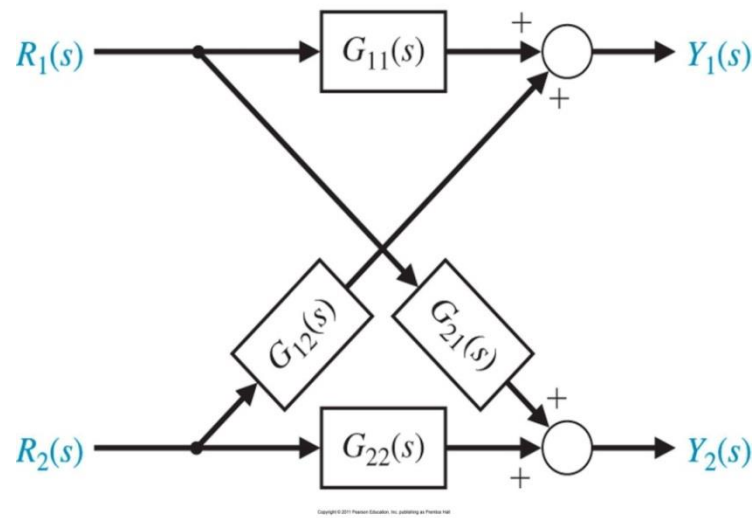

$$Y_1(s) = G_{11}(s)R_1(s) + G_{12}(s)R_2(s)$$
$$Y_2(s) = G_{21}(s)R_1(s) + G_{22}(s)R_2(s)$$

Block Diagram Transformations (Simplifications) (I)

Table 2.6 Block Diagram Transformations

Transformation	Original Diagram	Equivalent Diagram
1. Combining blocks in cascade	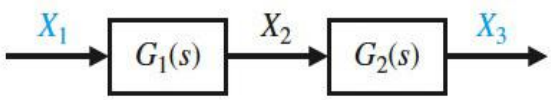	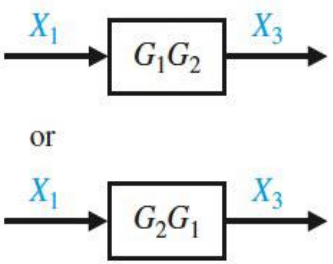
2. Moving a summing point behind a block	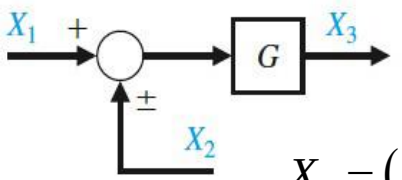	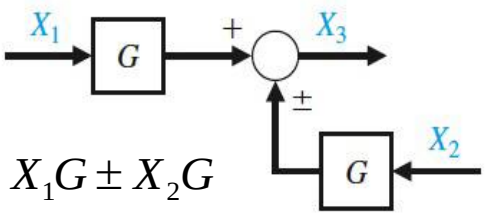
3. Moving a pickoff point ahead of a block	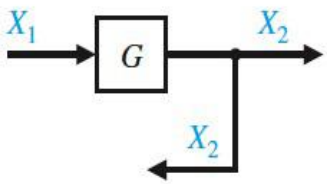	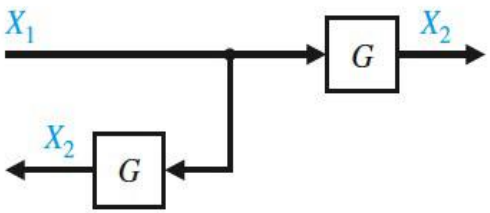

$$X_3 = (X_1 \pm X_2)G = X_1G \pm X_2G$$

$$X_2 = X_1G$$

Copyright © 2011 Pearson Education, Inc. publishing as Prentice Hall

Block Diagram Transformations (Simplifications) (II)

4. Moving a pickoff point behind a block

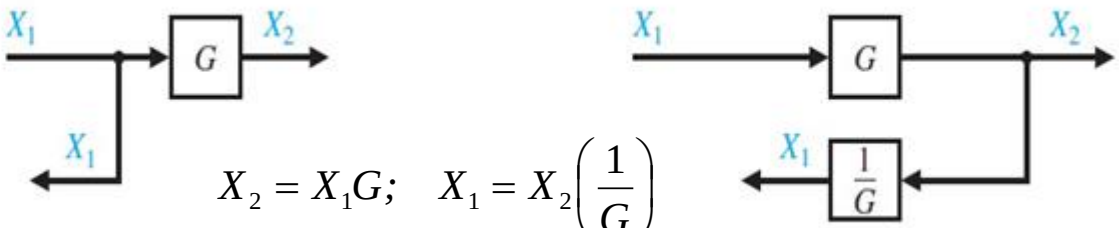

$$X_2 = X_1 G; \quad X_1 = X_2\left(\frac{1}{G}\right)$$

5. Moving a summing point ahead of a block

$$X_3 = X_1 G \pm X_2 = \left[X_1 \pm X_2\left(\frac{1}{G}\right)\right]G$$

6. Eliminating a feedback loop

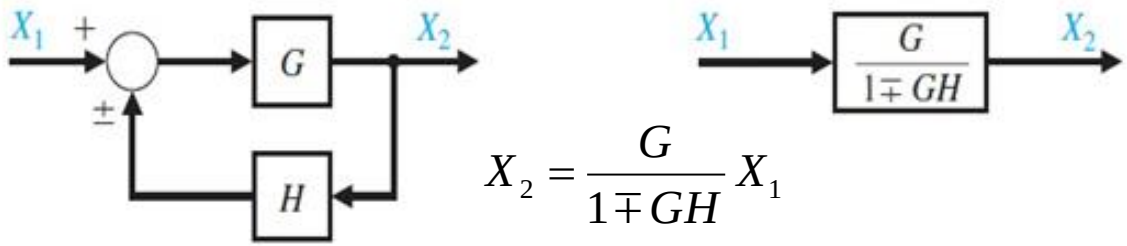

$$X_2 = \frac{G}{1 \mp GH} X_1$$

$$\text{Special Case: when negative feedback and } H = 1 \text{ ("unity feedback")} \Rightarrow \frac{G}{1+G}$$

Example

- Find the transfer function for the following system:

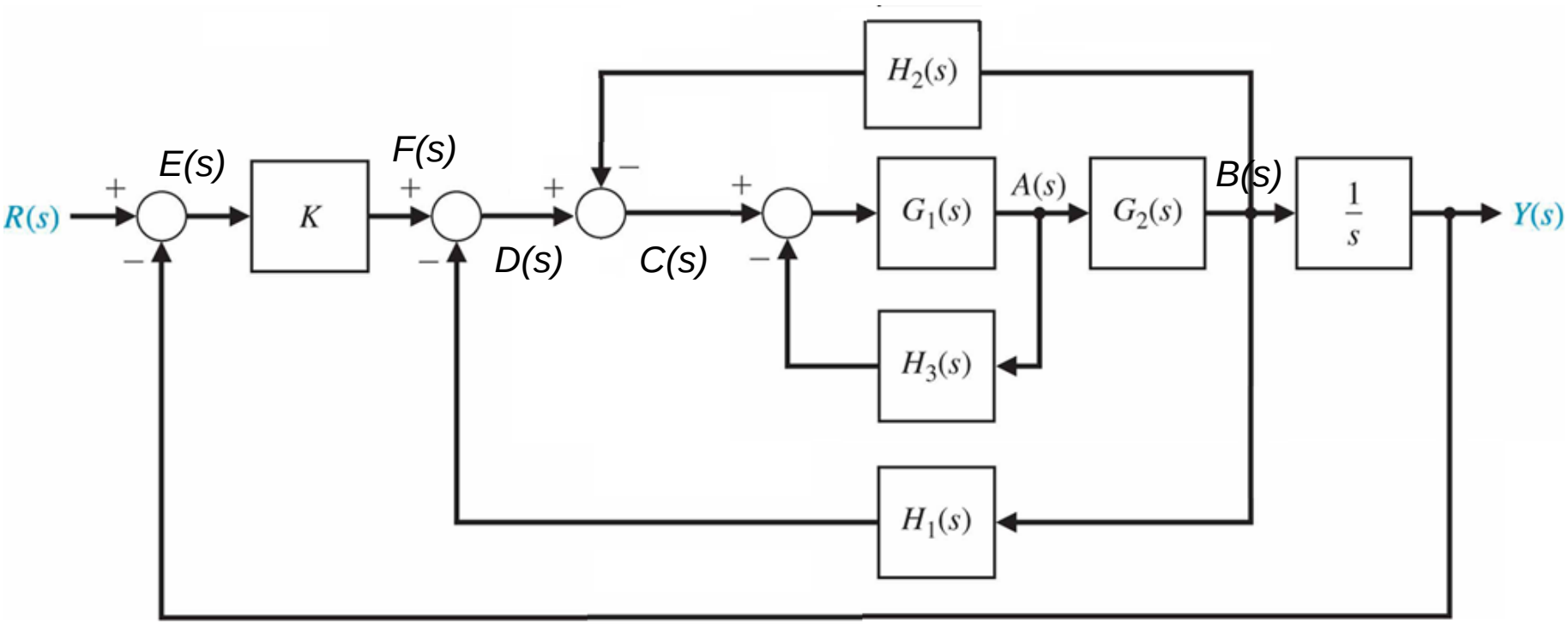

Signal Flow Graph

- A diagram consisting of nodes that are connected by several directed branches
  - Branch: a unidirectional path segment
  - Node: a junction of variables (including input/output point)
  - Path: a <u>sequence</u> of branches from one node to another node (usually from input to output)
  - Loop: a closed path that originates and terminates on the same node
    - Non-touching loop: if two loops do not have a common node

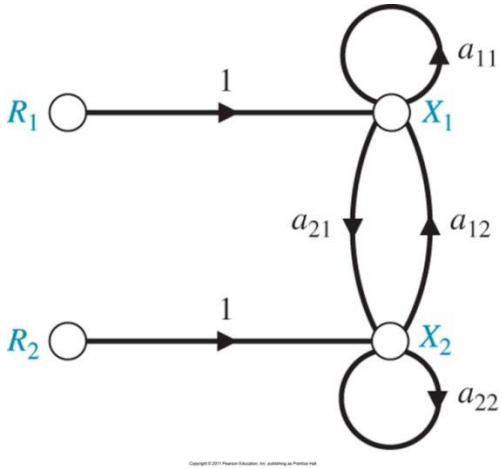

Mason Formula (I)

The transfer function from i to j : $T_{ij} = \dfrac{\sum_{k=1}^{N_k} P_{ij,k}\ \Delta_{ij,k}}{\Delta}$

$P_{ij,k}$: The gain of the k-th (forward) path from node i to node j

N_k : The total number of possible (forward) paths from node i to node j

Δ : The determinant of the entire graph

$$\Delta = 1 - \sum_{n=1}^{N} L_n + \sum_{\substack{n,m \\ nontouching}} L_n L_m - \sum_{\substack{n,m,p \\ nontouching}} L_n L_m L_p + \cdots$$

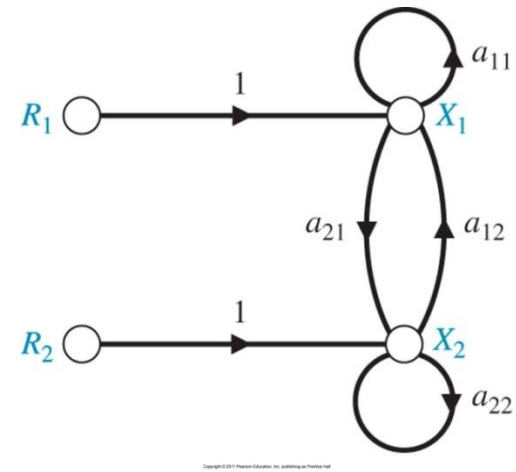

L_n, L_m, etc. : The gain of the n-th (or the m-th, etc.) loop

N : Total number of loops in the entire graph

$\Delta_{ij,k}$: The cofactor of the determinant along path k

i.e., the determinant of the entire graph with the loop that touches path k removed

Special case : for single input, single output system ($i = j = 1$), Then $T = \dfrac{\sum_{k=1}^{N_k} P_k\ \Delta_k}{\Delta}$

Mason Formula (II)

$$T_{ij} = \frac{\sum_{k=1}^{N_k} P_{ij,k} \ \Delta_{ij,k}}{\Delta}$$

The determinant of the entire graph $\Delta = 1 - \sum_{n=1}^{N} L_n + \sum_{\substack{n,m \\ \text{nontouching}}} L_n L_m - \sum_{\substack{n,m,p \\ \text{nontouching}}} L_n L_m L_p + \cdots$

can also be written as:

$\Delta = 1 -$ (sum of all different loop gains)

$+$ (sum of the gain products of all combinations of two nontouching loops)

$-$ (sum of the gain products of all combinations of three nontouching loops)

$+ \quad \cdots$

Example

- Find the transfer function for the following system using Mason's formula:

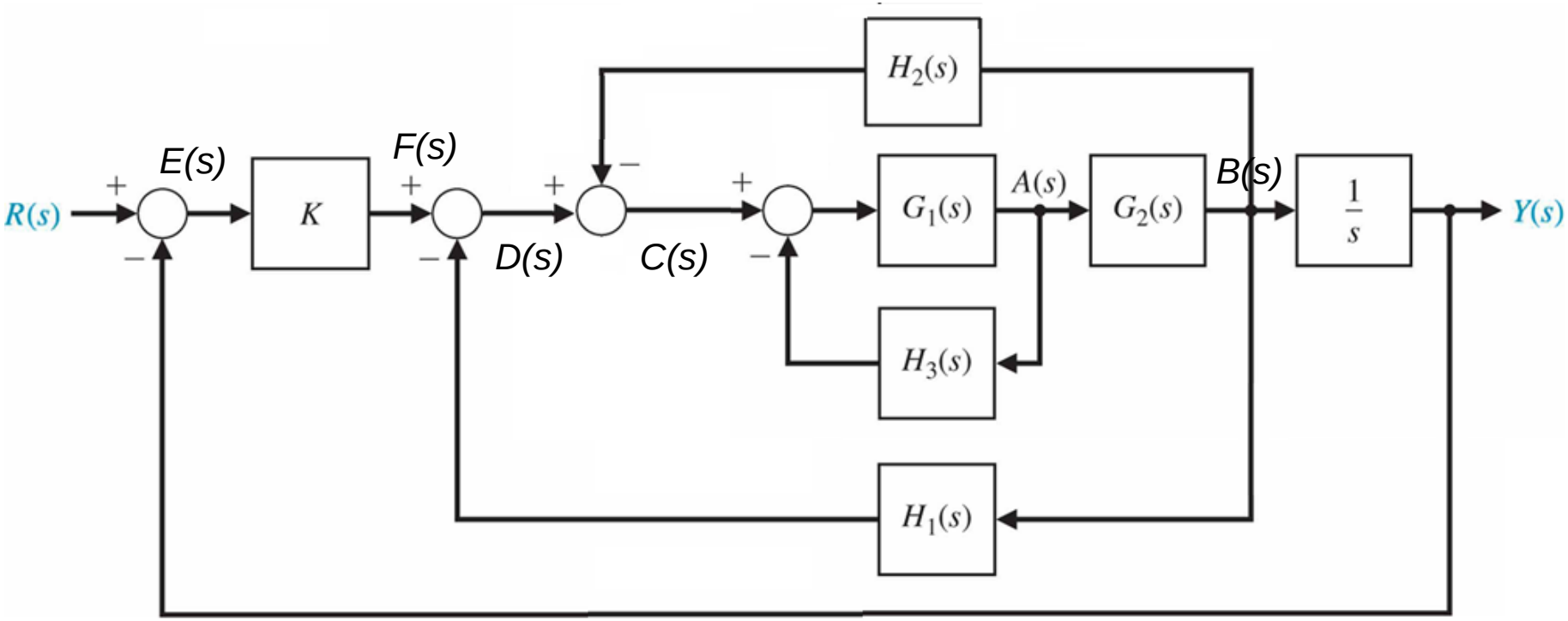

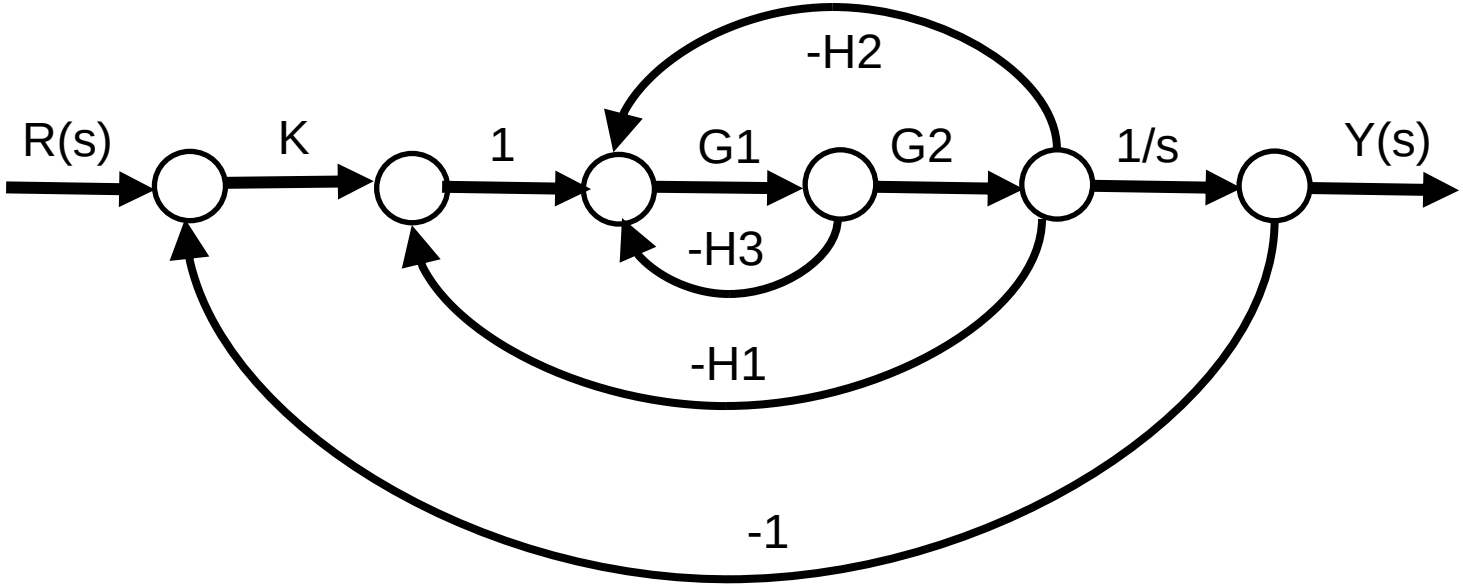
-H2
R(s)
K
1
G1
G2
1/s
Y(s)
-H3
-H1
-1

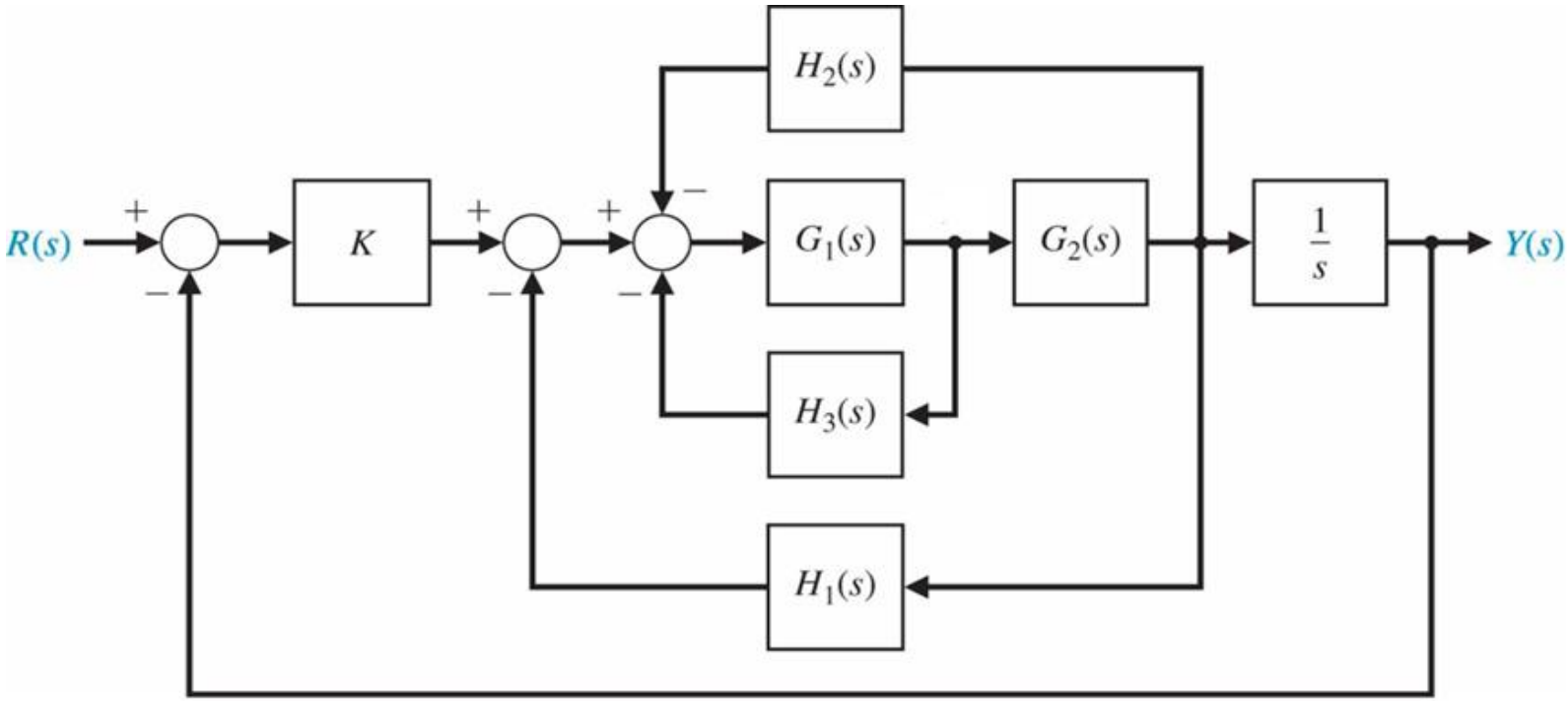
$H_2(s)$
$R(s)$
K
$G_1(s)$
$G_2(s)$
$\frac{1}{s}$
$Y(s)$
$H_3(s)$
$H_1(s)$