Chapter 4: Feedback Control System Characteristics

- Error signal analysis
  - Find the error signal using superposition theorem
  - The closed-loop transfer functions for disturbance and noise
- Sensitivity analysis
  - System sensitivity
  - Parameter sensitivity
- Steady-state error

The Feedback Control Systems

- The feedback control systems in this chapter
  - Tracking systems
  - Unity feedback
- A well-designed feedback control system can
  - Reject disturbance and attenuate noise (external)
  - Reduce system sensitivity to parameter variations (internal)
  - Adjust transient response and reduce steady state error
- The “cost” of feedback systems

Error Signal Analysis

- Consider the following unity feedback tracking system, with input *R(s)*, disturbance *Td(s)*, and measurement noise *N(s)*

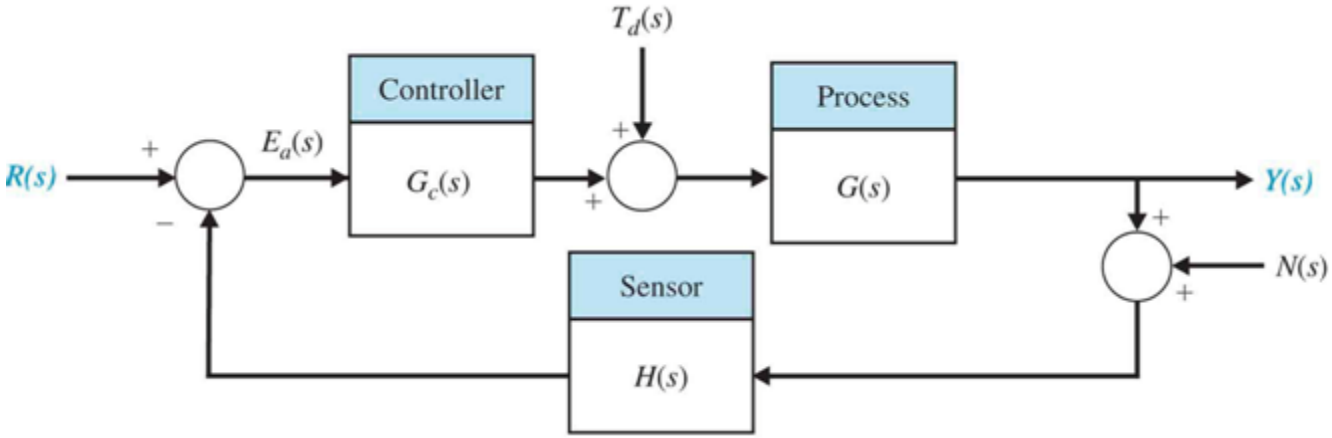

Let $H(s) = 1$ (unity feedback tracking system)

$$E(s) = E_1(s) + E_2(s) + E_3(s)$$

$$= \frac{1}{1+G_cG}R(s) - \frac{G}{1+G_cG}T_d(s) + \frac{G_cG}{1+G_cG}N(s)$$

Sensitivity Analysis (I)

- Let $T_d(s) = 0$, $N(s) = 0$

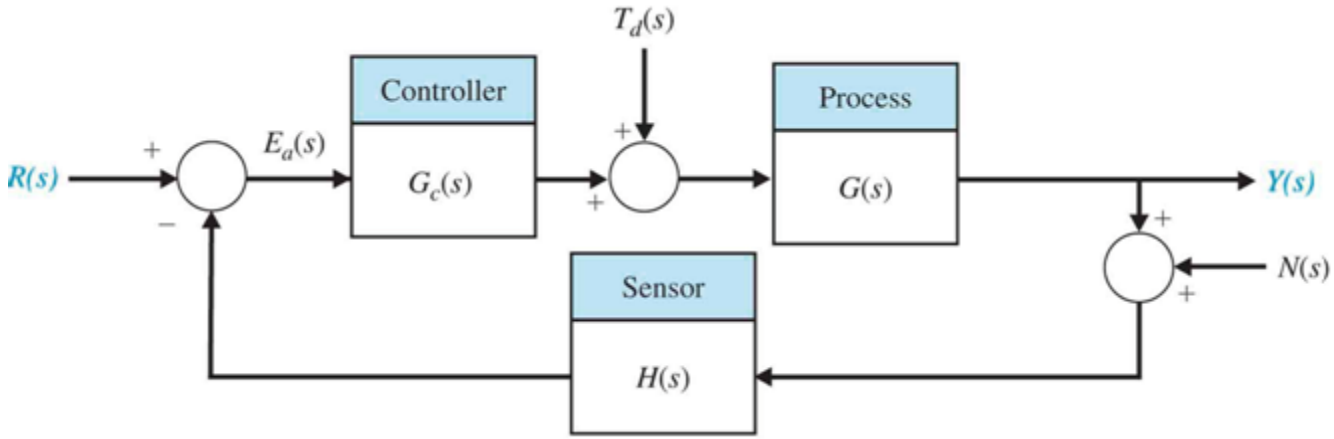

  – Consider a small change on $G(s)$, i.e. $\Delta G(s)$ which will cause $\Delta T(s)$ (change on the overall transfer function $T(s)$). Define system sensitivity as:

$$S_G^T = \frac{\dfrac{\Delta T(s)}{T(s)}}{\dfrac{\Delta G(s)}{G(s)}} = \frac{\Delta T(s)}{\Delta G(s)} \cdot \frac{G(s)}{T(s)} \approx \frac{\partial T(s)}{\partial G(s)} \cdot \frac{G(s)}{T(s)}$$

Sensitivity Analysis (II)

- System sensitivity (for small incremental changes)
  - The ratio of the (normalized) change in overall transfer function *T(s)* to the (normalized) change of a process (<u>plant</u>) transfer function *G(s)* $S_G^T = \frac{\partial T(s)}{\partial G(s)} \cdot \frac{G(s)}{T(s)}$
- Parameter sensitivity
  - The (normalized) ratio of the change in overall transfer function *T(s)* to the (normalized) change of a <u>parameter</u> α. In general, $S_\alpha^T = \frac{\partial T(s)}{\partial \alpha} \cdot \frac{\alpha}{T(s)}$
  - If α is a process (plant) parameter in *G(s)*, then using chain rule, it can also be written as (same result for the two formulas) $S_\alpha^T = \frac{\partial T(s)}{\partial G(s)} \cdot \frac{\partial G(s)}{\partial \alpha} \cdot \frac{\alpha}{T(s)}$

Sensitivity Analysis (III)

- Open-loop vs. closed-loop $S_G^T = \frac{\partial T(s)}{\partial G(s)} \cdot \frac{G(s)}{T(s)}$
  - The <u>system sensitivity</u> of an open-loop system is 1 (constant)
  - Closed-loop feedback control system can reduce both system sensitivity and the parameter sensitivity of the plant
- Sensitivity can be a function of *s* (i.e., frequency)
  - That is, the values of sensitivity can be different for different frequencies

Examples

- In the following system, *a* is a parameter of the plant; *Gc*(*s*) is the transfer function of a controller. Find the sensitivity of *a* with the system transfer function for (a) open-loop; (b) closed-loop.

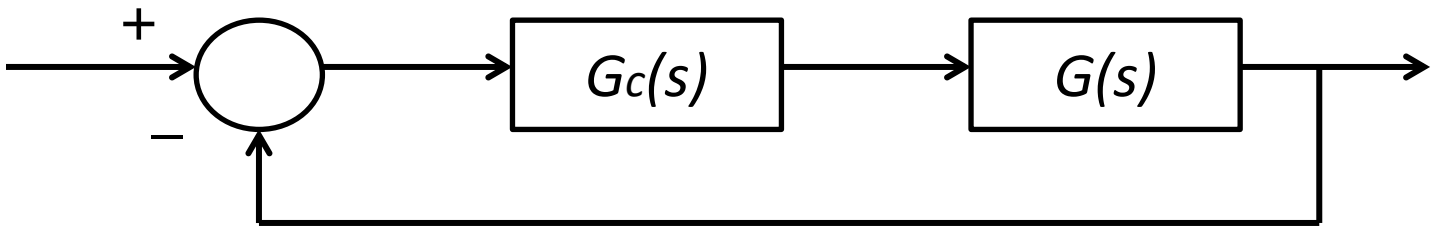

$$\text{Let } G_C(s) = K, \quad G(s) = \frac{1}{s+a}$$

$$\text{Discuss the relationship between sensitivity and } K$$

- For a feedback system with the following closed-loop transfer function, find the sensitivity of *T(s)* to changes in parameter *p*, where *p* > 0

$$T(s) = \frac{s^2 + ps + 10}{s^3 + 2ps^2 + 4s + (3-p)}$$

Transient Response and Steady State Error (I)

- The controller in feedback control system ($Gc(s)$) can adjust system transient response (next chapter)
- Feedback controller can also reduce system steady-state error. For tracking systems:
  - Open-loop: $E(s)_{open-loop} = [1 - G_C(s)G(s)]R(s)$
  - Closed-loop (**<u>unity feedback</u>**):

    $$E(s)_{closed-loop} = \frac{1}{1 + G_C(s)G(s)} R(s)$$
  - Time-domain relationship: $e_{ss}(\infty) = \lim_{t \to \infty} e(t) = \lim_{s \to 0} [s\,E(s)]$
    - Condition: All poles of *E(s)* in LHP
  - DC gain: $G(s)\big|_{s=0} = G(0)$

Transient Response and Steady State Error (II)

- For the **<u>unit step response</u>** of **<u>unity feedback tracking systems</u>**:
  - Open-loop: $e_{ss}(\infty) = 1 - G_C(0)G(0)$
  - Closed-loop: $e_{ss}(\infty) = \dfrac{1}{1 + G_C(0)G(0)}$

Examples

- Consider a stable feedback tracking system with the following closed-loop transfer function, find the steady-state error to a step input, where $E(s) = R(s) - Y(s)$

$$T(s) = \frac{s^2 + ps + 10}{s^3 + 2ps^2 + 4s + (3 - p)}$$

- For the following system, determine the steady-state error (i.e. $e(\infty)$) due to a <u>step disturbance</u> (i.e., $T_d(s) = 1/s$) <u>when $R(s)=0$</u>
  - Note how $E(s)$ is defined
  - <u>Not</u> unity feedback
  - Note "–" sign on $T_d(s)$
  - Can we reduce e_{ss} by adjust the gains K_1, K_2, or K (assume they all positive)?

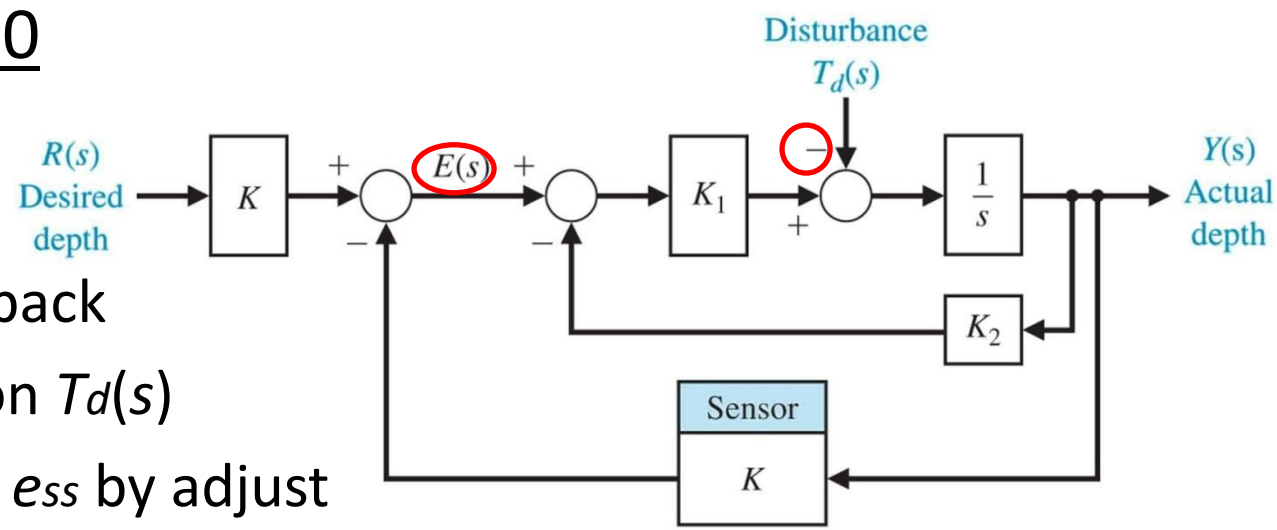

The Cost of Feedback

- System complexity
- Loss of gain
  - Open-loop: $T(s) = G_C(s)G(s)$
  - Closed-loop (unity feedback): $T(s) = \dfrac{G_C(s)G(s)}{1 + G_C(s)G(s)}$
  - Trade-off: closed-loop system yields reduced gain but increased control of system response (transient and steady-state)
- Stability issue
  - Open-loop: stable if both $G_C(s)$ and $G(s)$ stable
  - Closed-loop: no guarantee
    - Closed-loop poles: $1 + G_C(s)G(s) = 0$