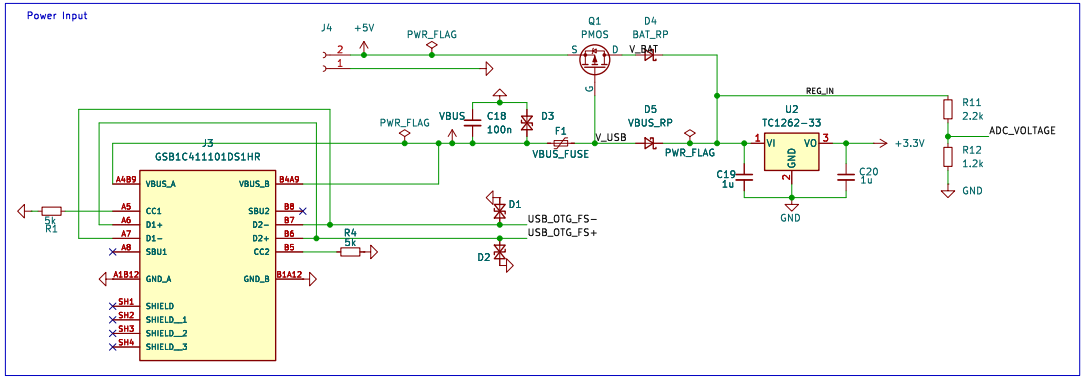

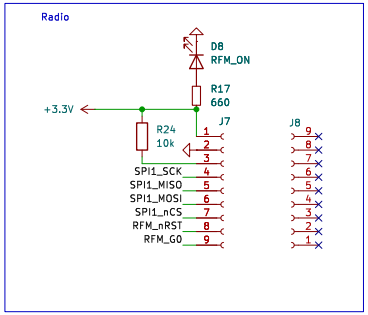

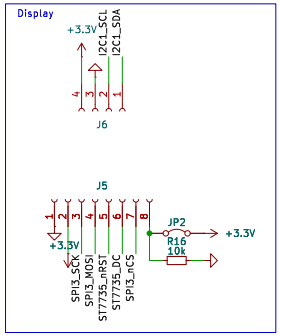

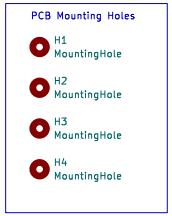

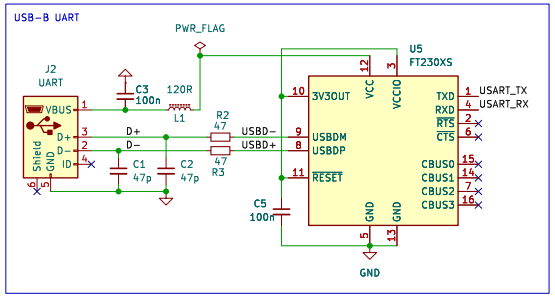

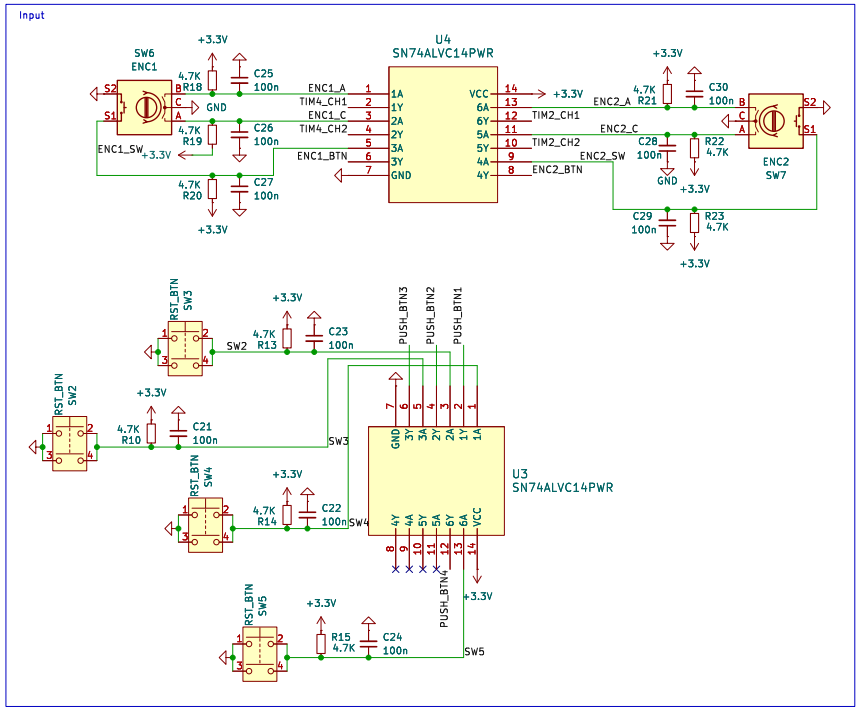

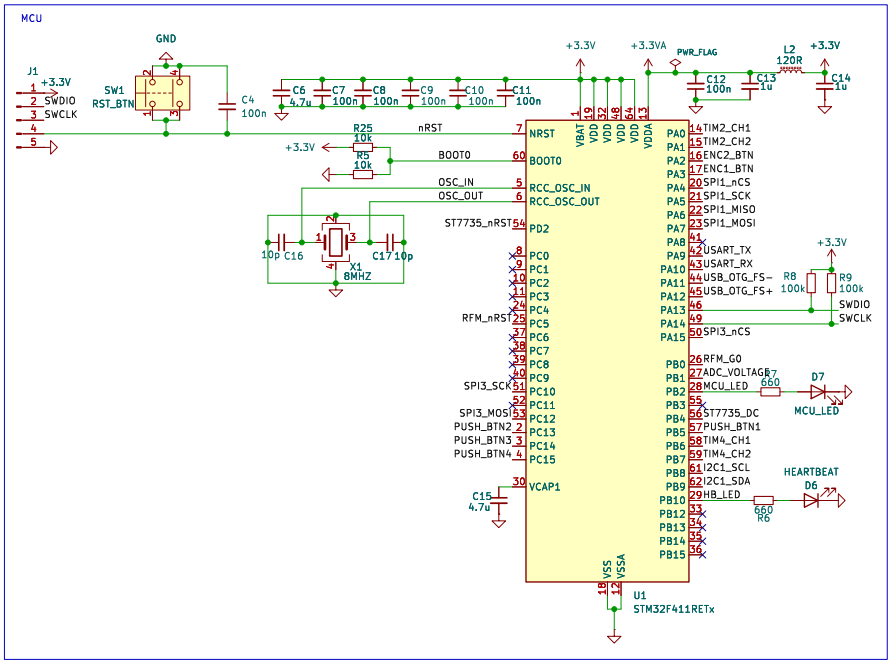

Ryan Kelly

Sheet: /

File: drone_remote.kicad_sch

Title: Senser Server

Size: A3	Date: 2025-01-16	Rev: 0.2
KiCad E.D.A. 8.0.6		Id: 1/1