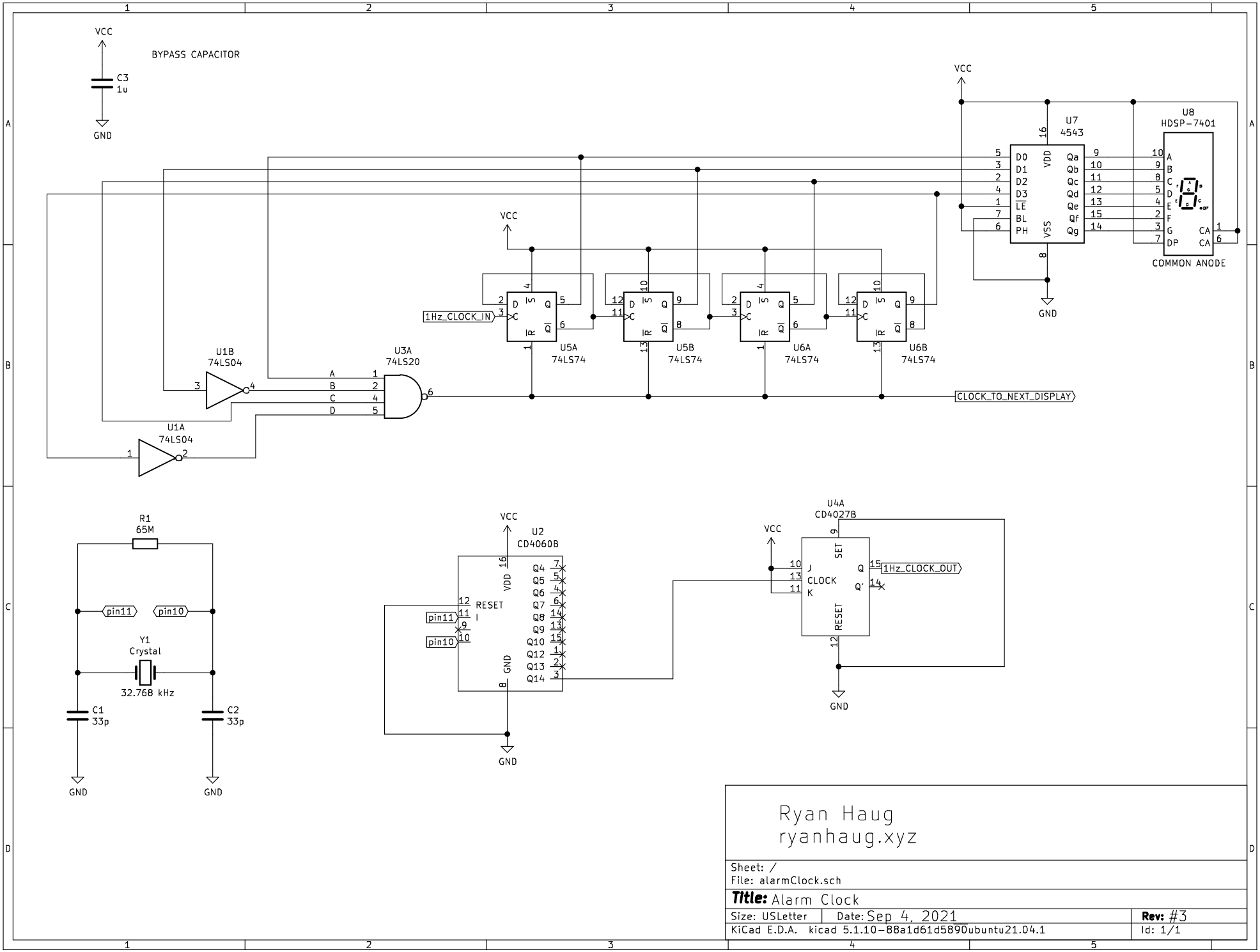
VCC
BYPASS CAPACITOR
C3
1u
GND
U7
4543
U8
HDSP-7401
COMMON ANODE
U5A
74LS74
U5B
74LS74
U6A
74LS74
U6B
74LS74
1Hz_CLOCK_IN
U1B
74LS04
U1A
74LS04
U3A
74LS20
CLOCK_TO_NEXT_DISPLAY
R1
65M
pin11
pin10
Y1
Crystal
32.768 kHz
C1
33p
C2
33p
U2
CD4060B
RESET
U4A
CD4027B
CLOCK
1Hz_CLOCK_OUT
Ryan Haug
ryanhaug.xyz
Sheet: /
File: alarmClock.sch
Title: Alarm Clock
Size: USLetter
Date: Sep 4, 2021
Rev: #3
KiCad E.D.A. kicad 5.1.10-88a1d61d5890ubuntu21.04.1
Id: 1/1