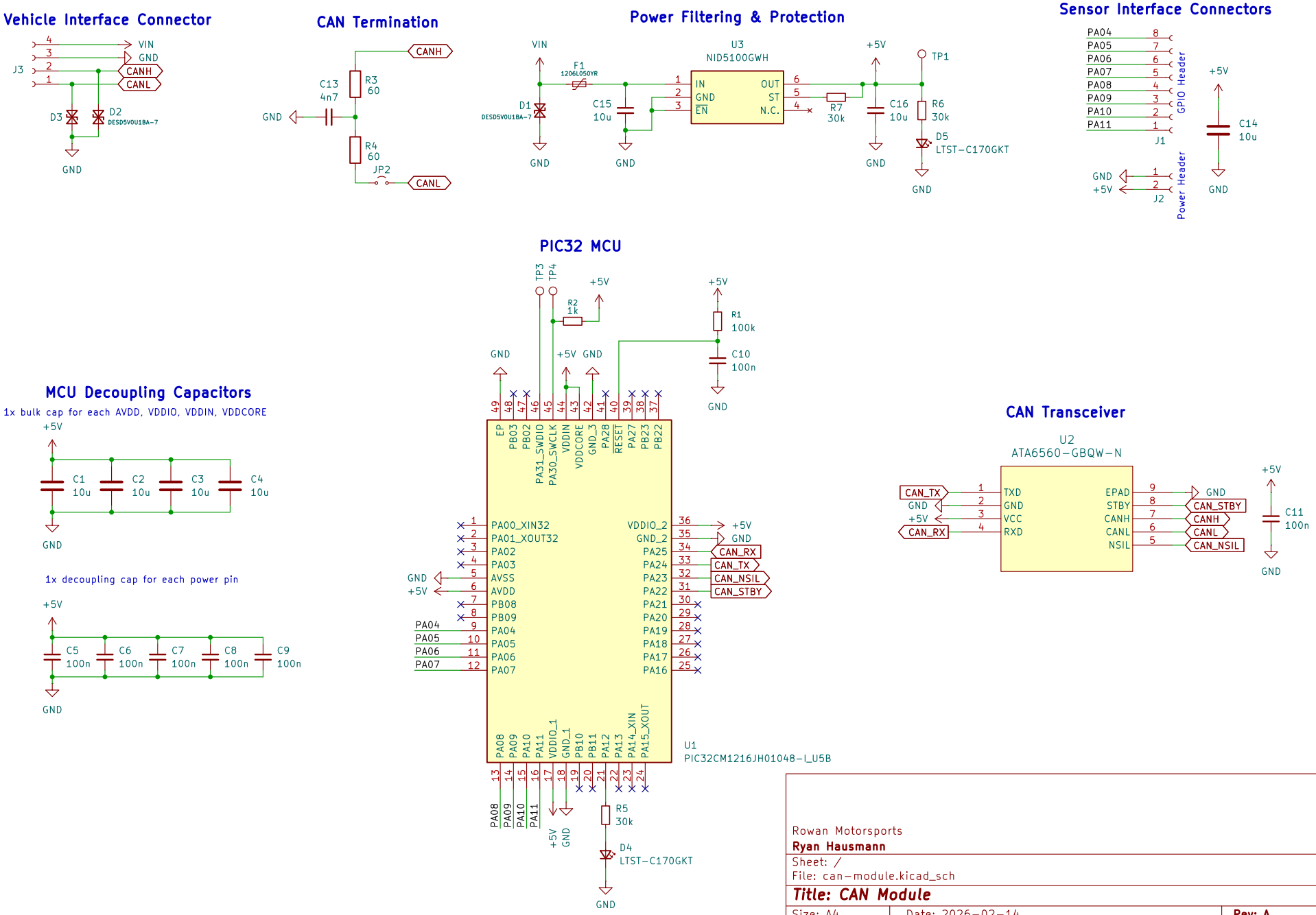

Rowan Motorsports
Ryan Hausmann
Sheet: /
File: can-module.kicad_sch

Title: CAN Module

Size: A4	Date: 2026-02-14	**Rev: A**
KiCad E.D.A. 9.0.7		Id: 1/1