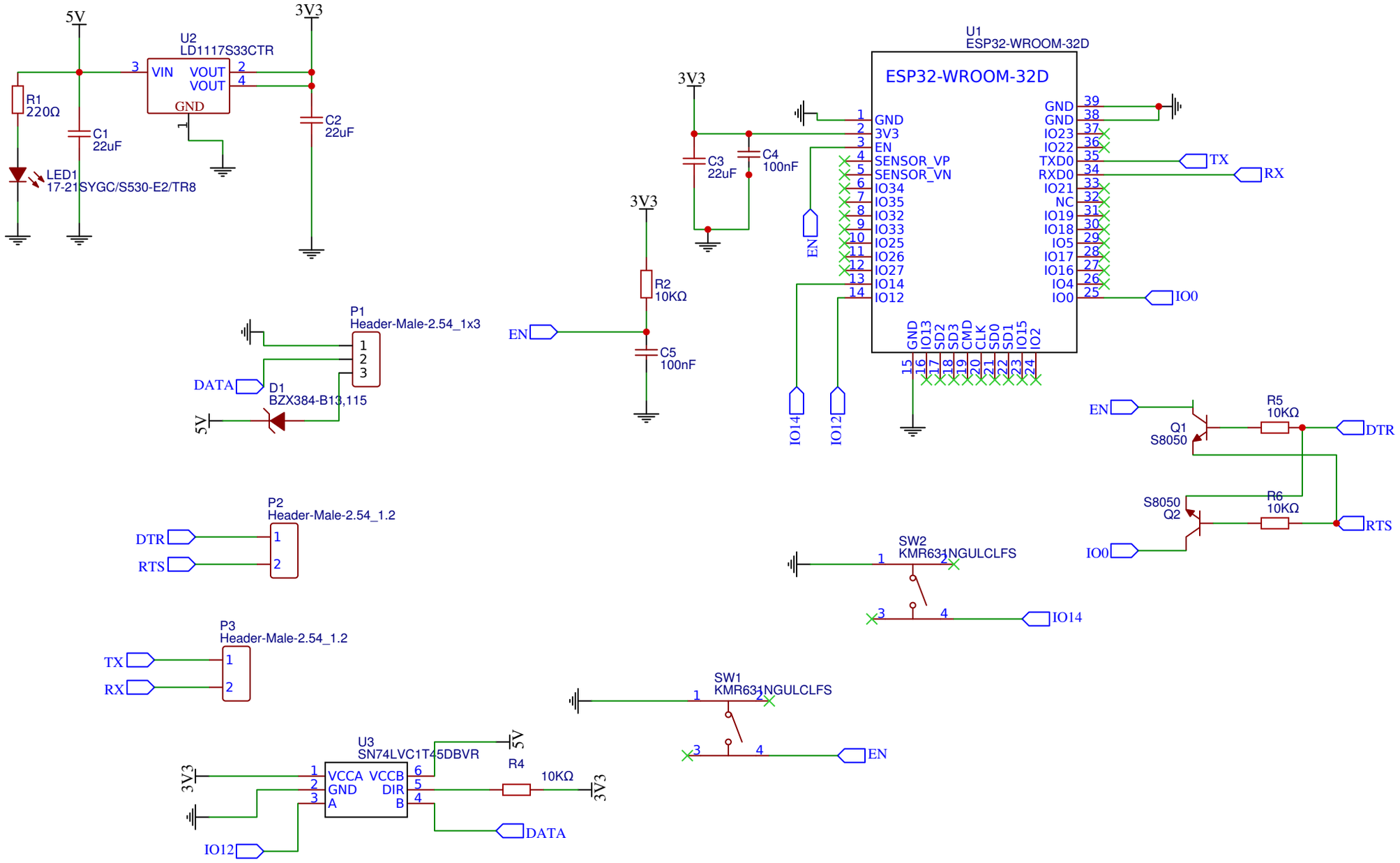

TITLE: DiodeHub ESP		REV: 1.0
EasyEDA	Company: Ryan Mitts	Sheet: 1/1
	Date: 2019-03-03 Drawn By: ryanmitts	