TOOL No	PART No.	HOB No	AVICORP DIE No	AVICORP HOB No	A	B	C	D	E	F
PT87038	BS03-0614	PT87033	PP35138	PP35140	.180	.230	.033	.325	.005	.100
PT87039	BS03-0622	PT87034	PP35139	PP35148	.380	.560	.033	.210	.005	.110
PT87040	BS03-0618	PT87035	PP35144	PP35149	.240	.405	.033	.210	.004	.110
PT87041	BE36-0610	PT87036	PP35153	PP35154	.310	.475	.033	.210	.005	.110
PT110622	BS13-0618	PT110621	-------	-------	.240	.405	.0305	.210	.005	.100
PT121629	BS13-0622	PT121628	-------	-------	.380	.560	.0305	.210	.005	.100

ENLARGED VIEWS OF FORM

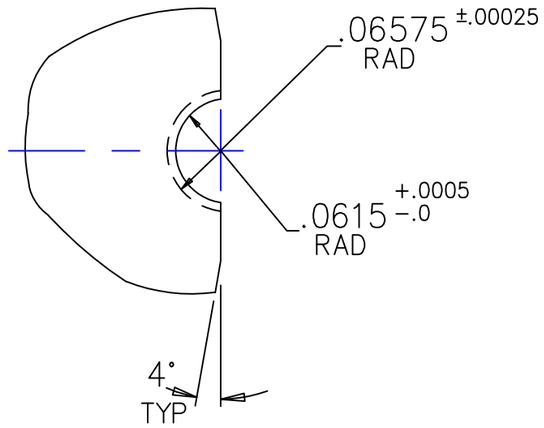

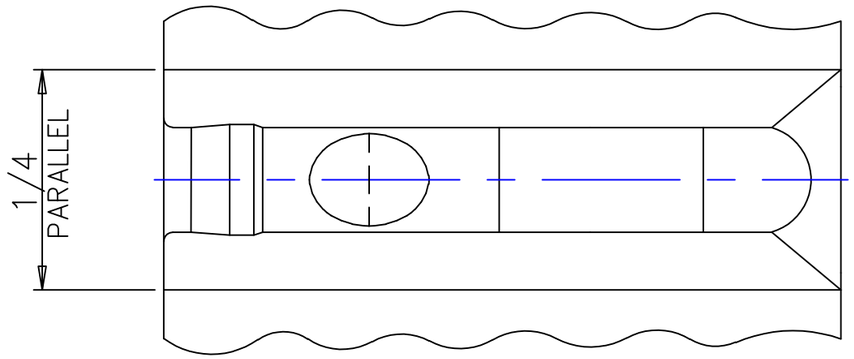

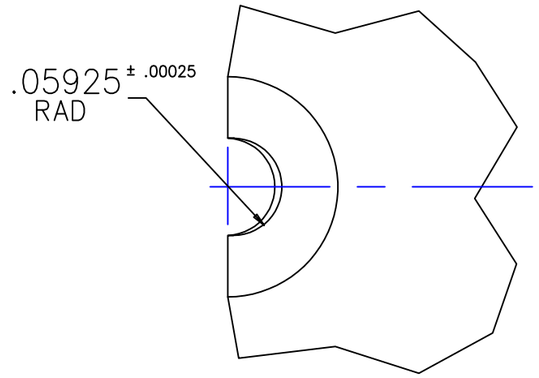

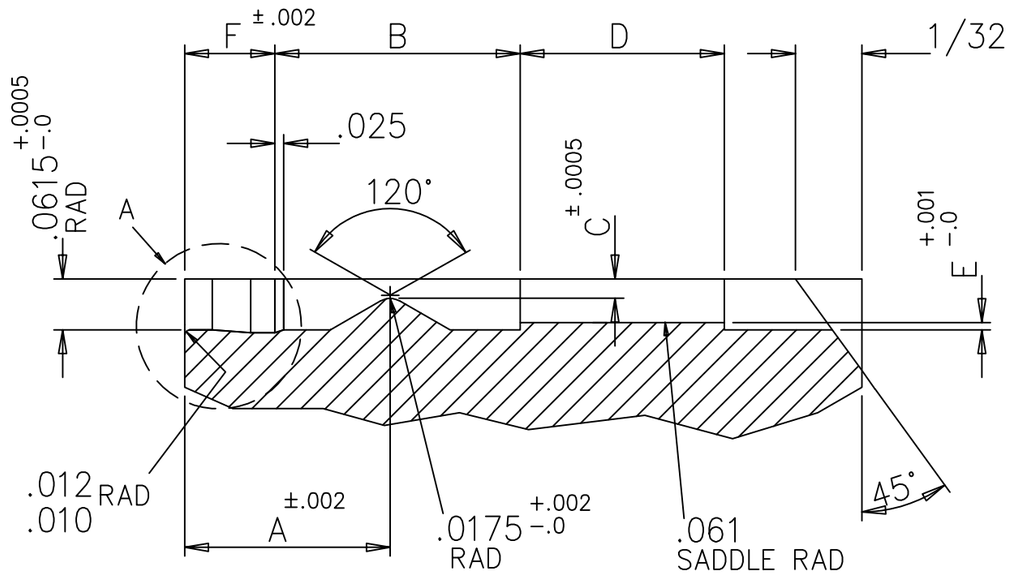

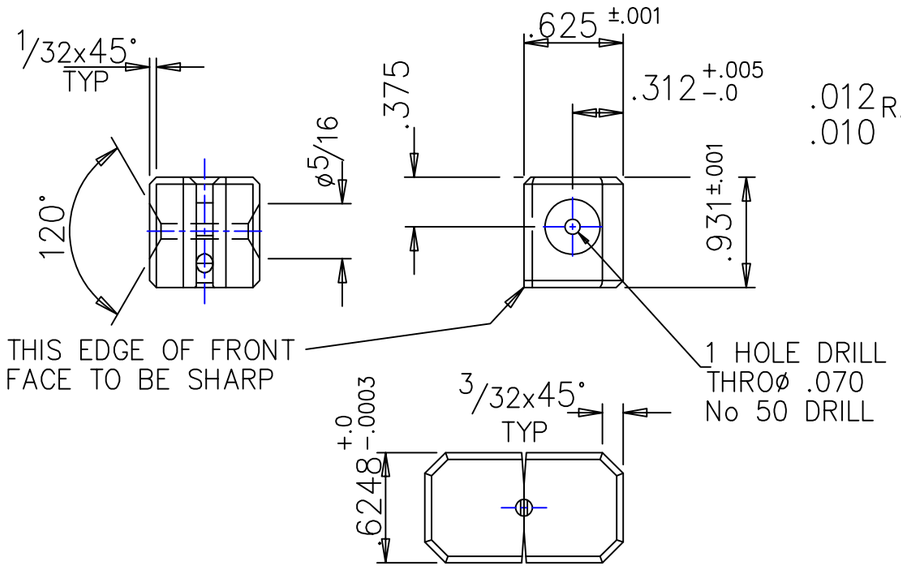

MATCHED PAIR SHOWN
SEE NOTE

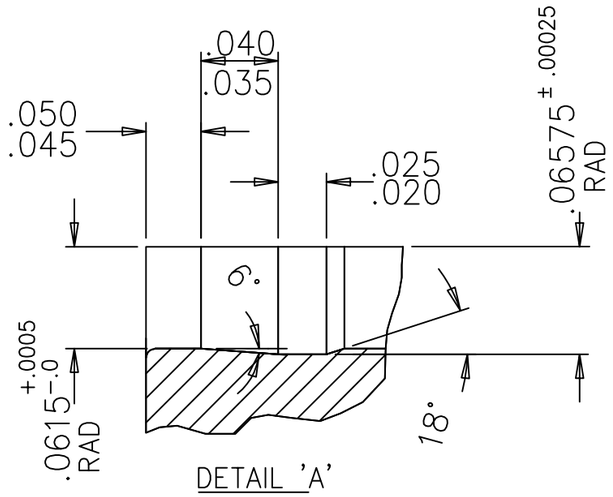

DETAIL 'A'

NOTE – TO BE MADE, STORED & USED AS A MATCHED PAIR

HEAT TREATMENT : 1050° C OIL QUENCH DOUBLE TEMPER 370/380° C TO ROCKWELL 55–57C

SURFACE TEXTURE TO BE 16 MICRO-INCHES UNLESS OTHERWISE STATED

LIMITS UNLESS STATED	DECIMAL ± .005 INCHES FRACTIONAL ± 1/64 INCHES ANGULAR ± 1/2 DEGREE DRILL EN 20286/BS 1916-H11 SURFACE TEXTURE N8			DIMENSIONS IN INCHES UNLESS STATED REMOVE ALL BURRS AND SHARP EDGES			ORIGINAL SHEET SIZE A2	
MATERIAL	K306							
HEAT TREATMENT	SEE DRAWING							
SURFACE TREATMENT							LUBRICATION	
DRAWN	DATE	ISSUE	H	I	J	K	L	M
A. HOUGH	04/09/97	C.N.	CN 9981	CN 11146	CN 13018	CN 13199	CN 19306	CN 19878
DESCRIPTION	DIE BLOCK INSERTS FOR STAVEX							

This document is the property of Avdel UK Limited and is issued on the express terms that it is to be treated as private and confidential and is not to be communicated to any other person. All patents, manufacturing and design rights are reserved by Avdel UK Limited.

STANLEY. Engineered Fastening

STANLEY Engineered Fastening
Avdel UK Limited
Stanley House, Works Road,
Letchworth Garden City,
Hertfordshire, SG6 1JY
Registered in England: No. 315076

SCALE –	SHEET 1	ISSUE M	
DRAWING NUMBER	CD102053		