SESAME

Sesame Motor Corp., A leading brand in gear technology.

# PLANETARY GEARHEADS

100%

Made in Taiwan

www.sesamemotor.com

ISO 9001 ISO 14001

# TABLE OF CONTENTS

## SESAME MOTOR

01 Company Profile
04 Trade Mark & Certification
05 Corporate Environment
07 Production Line
08 Applications

## PLANETARY GEARHEADS

09 Planetary Gearheads Series Lineup
11 Coding System
13 Planetary Gearhead Operation Manual
15 Planetary Gearhead with Motor Mounting Instructions
16 Tightening Torque Table
17 Selection of the Optimum Gearhead

## PREMIUM TYPE

19 PHL Series
25 PHFR Series
33 PHF Series
43 PGH Series
49 PUR Series
55 PUL Series

## PRECISION ADVANCED TYPE
## PRECISION TYPE

61 PUA Series
67 PGLH Series
73 PGCH Series
79 PGEH Series
85 PGSH Series
91 PGL Series
99 PGC Series
105 PGE Series
111 SGC Series
117 SGE Series
123 PGRH Series
131 PGR Series
137 PGFR Series
145 PGF Series

## STANDARD TYPE

167 PAE Series
173 PAC Series
179 PAN Series
185 PGS Series
191 PNS Series
199 PGW Series

## PRIMARY TYPE

155 PBC Series
161 PBE Series

# Production Line

Planetary Gearheads Production Line

Induction Motor and
Speed Reducer Production Line

Precision Gear Motor Production Line

# Applications

## Applications of Planetary Gearhead

### Machine Tools
Metal Cutting Machines, Machining Centers, CNC Drilling Machines, Lathes and Turning Machines, Milling and Boring Machines, Grinding Machines, Drilling Machines, Planning Machines, Metal Forming Machine Tools, Presses, Tube and Wire Processing Machines.

### Industry Machinery
Packaging Machinery, Food and Beverage Processing Machinery, Bakery Equipment, Agricultural Machinery, Textile Machinery, Shoemaking Machinery, Wood Working Machinery, Printing Machinery, Plastic processing Machinery, Laser Cutting and Welding Machines.

### Automation Equipment
Industrial Robots, Semiconductor Devices, Automatic Storage System, Surface Treatment Equipments.

### Aerospace Industry

### Medical and Rehabilitation Equipment

### Electric Scooter

### Green Energy-Related Industries

### Testing Devices

### Automation and Precise Positioning Equipment with Servo Motors

SESAME

# PLANETARY GEARHEAD

## SERIES LINEUP

### Program Features & Benefits

- Multiple design configurations and performance levels
- Adapters for all servo motors
- Drop-ins for most industry standards
- Hardened and ground gearing
- One-piece planet carrier/output shaft on most models
- Planets with full needle bearing support
- IP65 protection on most models

### Premium Type

- Backlash as low as 1 arc-minute, ultimate performance
- 3 designs to choose from, up to 7 sizes available
- Capacity from 10-2000 Nm

### Precision Advanced Type

- 3 levesl of backlash, for demanding applications
- 3 designs configurations, 7 frame sizes 42-220 mm
- Square or round mounting, ratio from 3-100:1

### Precision Type

- 3 levesl of backlash, 4 design configurations
- 7 frame sizes 42-220 mm
- Square or round mounting, ratio from 3-100 : 1
- Stainless steel series available

### Standard Type

- 5 frame sizes 42-115 mm, general purpose applications
- Good backlash values, ratios up to 1000:1
- Reliable operating performance, cost effective integration

### Primary Type

- 5 frame sizes 42-115 mm, general purpose applications
- Good backlash values, ratios up to 1000:1
- Reliable operating performance, cost effective integration

Output Shaft

### In-line Series

- Multiple models and performance levels including stainless steel material ready for most industry applications
- 3 levels of backlash, frame sizes 42-220 mm
- Square or round mounting, ratios up to 1000:1

### Right Angle Series

- 3 models to choose from, saving linear space
- 3 backlash levels, 7 sizes from 42-220 mm
- Premium and precision designs, ratios from 3-200:1

### Output Flange

- Right angle and inline models, ISO mounting dimensions
- 3 levels of backlash, 7 frame sizes available
- High moment and axial load capacity

Output Flange

**In-line Series**

PHL Series
High Precision

PGLH Series

PGCH Series

PGEH Series

PGL Series

PGE Series

PGC Series

PAC Series

PAE Series

PGS Series

PBC Series
High Ratio (max. i=1000)

PGH Series
High Performance

PUL Series
High Radial Load

PUA Series

PGSH Series

SGC Series
Stainless Steel

SGE Series
Stainless Steel

PAN Series (NEMA)
High Ratio
(max. i=1000)

PNS Series
High Ratio
(max. i=1000)

PBE Series
High Ratio (max. i=1000)

**Right Angle**

PUR Series

PGRH Series

PGR Series

PNSR Series

**Output Flange**

PHF Series

PGF Series

PGW Series

**Right Angle**

PHFR Series

PGFR Series

Products due to human error, natural disasters or other factors lead to poor or damaged, will not be covered under warranty.

## CODING SYSTEM

P G H □ □ 9 0 T – 1 0 0 – P 2 – D K S S T – 14/50/30/3/70/4.5/27 – B J G 1

**Customized Specifications**
Blank=Standard
Custermized case #1
for BJ-GEAR=BJG1

**Motor Flange Dim.**

**Input Design:** E=Motor adaptation-one part
T=Motor adaptation- two parts
F=No motor adaptation- universal flange

**Lubrication & Temperature:** S=Standard, F=Food grade
L=Low temp, H=High temp

**Surface:** S= Standard surface, P=Special surface

**Output Design:** K: Output shaft with Key, M: Smooth output shaft
F: Flange output shaft, H: Hollow output shaft

**Clamping System Diameter**
A=8, B=10, C=11, D=14, E=16, F=19, G=22,
H=24, K=28, M=32, P=35, R=38, S=50, T=55,
N=No clamping system, Z=Specified diameter,
W=Specified diameter with keyway

**Backlash:** P0: Micro backlash, P1: Precision backlash, P2: Standard backlash

**Ratio:** 3~10 (1 Stage)/ 15~100 ( 2 Stages)/ 125~1000 ( 3 Stages)

**Type:** T (2 Stage_T type), A (A type)

**Size:** 42、50、60、70、75、90、100、115、120、140、142、180、200、220、235、255

**Series:** PHL/PGH/PGRH/PGLH/PGSH/PGCH/PGEH (Output Shaft)
PGL/PGR/PGE/PEE/PGC/PEC (Output Shaft)
PUL/PUA/PUR (Output Shaft/High Radial Force)
PHF/PGF/PHFR/PGFR (Output Flange)
PAE/PAC/PGS/PAN/PNS (Output Shaft)
PBE/PBC (Output Shaft) ; SGC/SGE (Stainless Steel/Output Shaft)
PGW (Hollow Output Shaft)

**Motor Flange Dimensions:**
Motor shaft diameter A =5/6/6.35/8/9/11/9.5/9.525/10/11/12/12.7/14/15.875/16/19/20/22/24/28/32/35/38/42/48/50/55
Flage diameter B=30/50/70/90/110/130... ; Motor shaft length C=25/40/50/79... ; Flange height D=2/3/4/5...
PCD of bore E=43.38/66.67/70/90/115... ; Bore diameter F=3.4/4.5/5.1/6.6/9... ; Effective length of motor shaft L=21/27...

## FILL IN DATA OF MOTOR

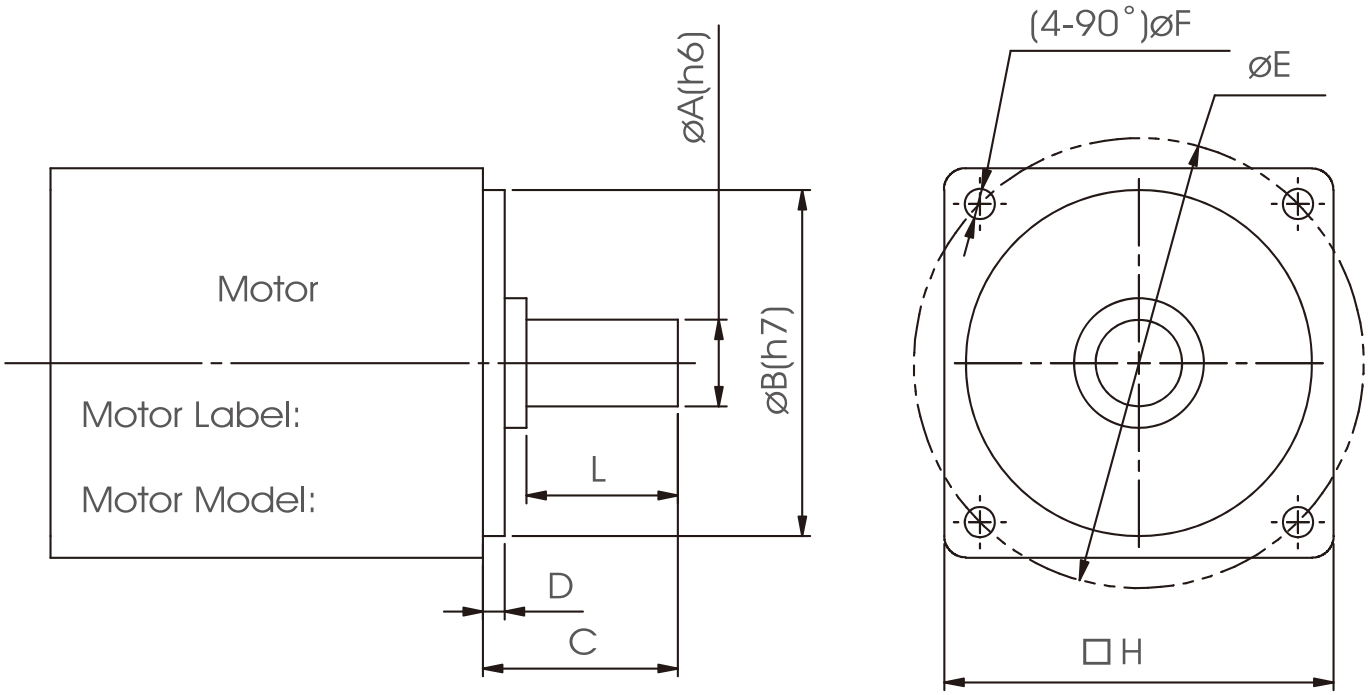


### SPECIFICATIONS

| Motor Shaft Dia. | Flange Dia. | Motor Shaft Length | Flange Height | P.C.D of Bore | Bore Dia. | Motor Flange Square | Actual Length of Motor Shaft | Backlash |
|---|---|---|---|---|---|---|---|---|
| øA(h6) | øB(h7) | C | D | øE | øF | □H | L | P0/P1/P2 |
| | | | | | | | | |

∗Sesame Planetary Gearheads are produced under strictly exclusive Pairing Process to ensure accuracy and lifespan.

∗The above motor shaft and flange dimensions are required to prevent selection error when ordering gearheads. Online selection tools are available to configure and draw SESAME planetary gearheads, please visit www sesamemotor.com.

# 1.NOTE

## 1.1 Preparation before installation

- Please read this operation manual before using gearheads. Any problems caused by inappropriate operation contrary with the manual, or damage caused by natural disasters, or restructure the gearheads without our permission, Sesame will not hold any responsibility nor will the gearheads be covered by warranty.

- Warranty is one year after purchase of the gearheads. Within warranty period, if gearheads damage is not caused by operation error nor by natural disaster, then please send back the gearheads, we should replace the damage spare part at free of charge.

- Installation, disassemble, maintenance on the gearheads, needed to be performed by trained technicians.

- According to the application and operation environment, the gearheads temperature might be raising after period of running. Please do not touch the gearheads directly during operation, or right off from operation.

- Do not touch any rotating components when the gearheads are running. Ensure that the plugs of the gearheads were inserted after installation. Avoid any small object fall into the gearheads.

- Handle the gearheads gently during installation, do not knock the gearheads by any tool, to avoid the influence of running accuracy.

- Do not disassemble or modify gearheads to prevent injury or equipment damage .

- Synthetic lubricant is sealed in gearheads, there is no need to change lubricant.

### 1.2 Installation environment limitation

Gearheads must be installed under following terms to prevent damages which are not covered by warranty.

- Gearheads are designed or manufactured to be used with other mechanical equipment assembly.
- Operate temperature is between -10 ℃ to + 90 ℃.
- Operate altitude may not be higher than 1000 m above sea-level
- Avoid continuity vibration or impact.
- Avoid gearbox used in flammable gas or corrosion gas environment.
- Humidity: no more than 85%, in order to avoid condensation.
- Avoid direct sunlight, dust accumulation.
- Avoid water or oil splashed.
- Used in good ventilated place.

## 2.Gearhead Introduction

As shown below, the input side is for installing the servo motor and the output is mounted to application equipment.

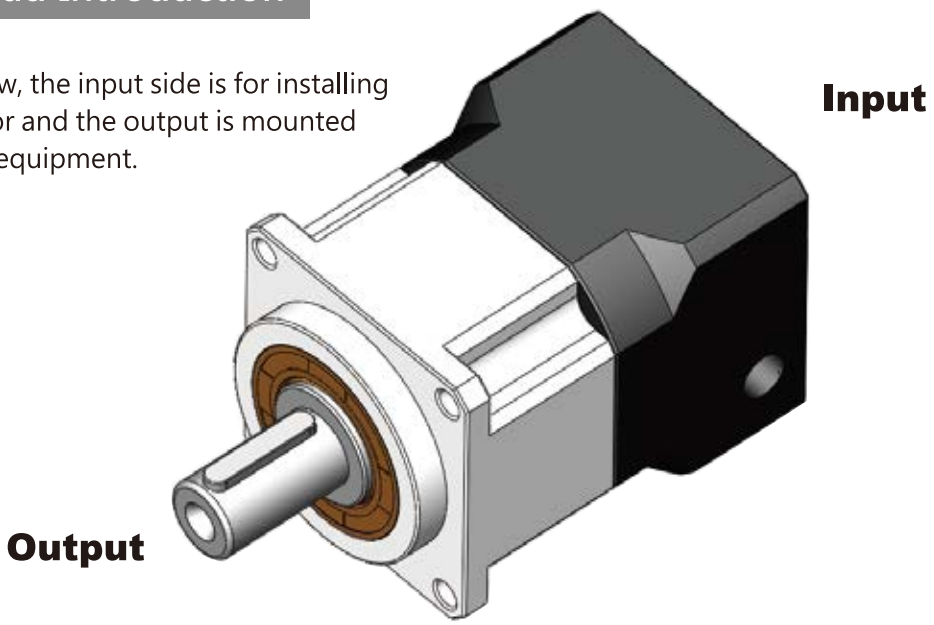


To ensure the product performance, both the input and output ends must be protected carefully to avoid any damage and cause improper operation.

# PLANETARY GEARHEAD WITH MOTOR MOUNTING INSTRUCTIONS

## For Parallel Type

**1**

Check the motor and gearbox size. Clean the mounting surface.

**2**

Take off the plug from the bracket. Revolve the set collar until the bolt is aligned with the hole.

**3**

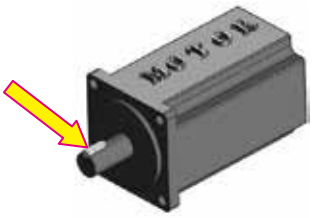


Remove the key from the motor shaft. Mounting the balance key if necessary.

**4**

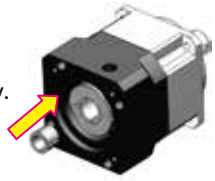

Make sure the motor shaft size. Choose the right bushing if necessary.

As installing on flatted shaft, be sure to align the collet gap over the flat and the set collar bolt perpendicular to the flat.

**5**

Install gearbox and motor vertically. Tighten the set collar bolt with torque wrench to 5% of specified torque.

**6**

Tighten the mounting bolts in 1~4 order with torque wrench to specified torque.

**7**

Tighten the set collar bolt with torque wrench to specified torque.

**8**

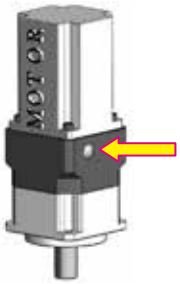


Put the plug back.

## For Hollow Spindle

**1**

Check the motor and gearbox size. Clean the mounting surface.

**2**

Take off the plug from the adapter plate. Revolve the set collar until the bolt is aligned with the hole.

**3**

Remove the key from the motor shaft. Mounting the balance key if necessary.

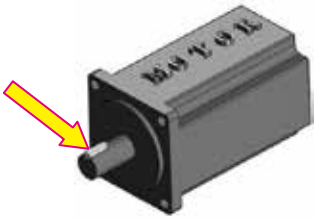

**4**

Make sure the motor shaft size. Choose the right bushing if necessary.

As installing on flatted shaft, be sure to align the collet gap over the flat and the set collar bolt perpendicular to the flat.

**5**

Install gearbox and motor vertically. Tighten the set collar bolt with torque wrench to 5% of specified torque.

**6**

Tighten the mounting bolts in 1~4 order with torque wrench to specified torque.

**7**

Tighten the set collar bolt with torque wrench to specified torque.

**8**

Put the plug back.

## Tightening Torque Table

### Tightening Torque Recommended for Motor Mounting Bolt

| Bolt Size | Width Across Flats | Strength 12.9 Tightening Torque | |
|---|---|---|---|
| | mm | N-m | In-lbs |
| M3*0.5P | 2.5 | 2.1 | 19 |
| M4*0.7P | 3 | 4.9 | 44 |
| M5*0.8P | 4 | 9.8 | 87 |
| M6*1P | 5 | 17 | 151 |
| M8*1.25P | 6 | 41 | 364 |
| M10*1.5P | 8 | 80 | 709 |
| M12*1.75P | 10 | 139 | 1232 |
| M14*2P | 12 | 223 | 1976 |
| M16*2P | 14 | 343 | 3038 |

Note 1: Holding torques must be bigger than values shown aboves. Bolts can be tightened up to 20% higher for increased holding.

## SELECTION OF THE OPTIMUM GEARHEAD

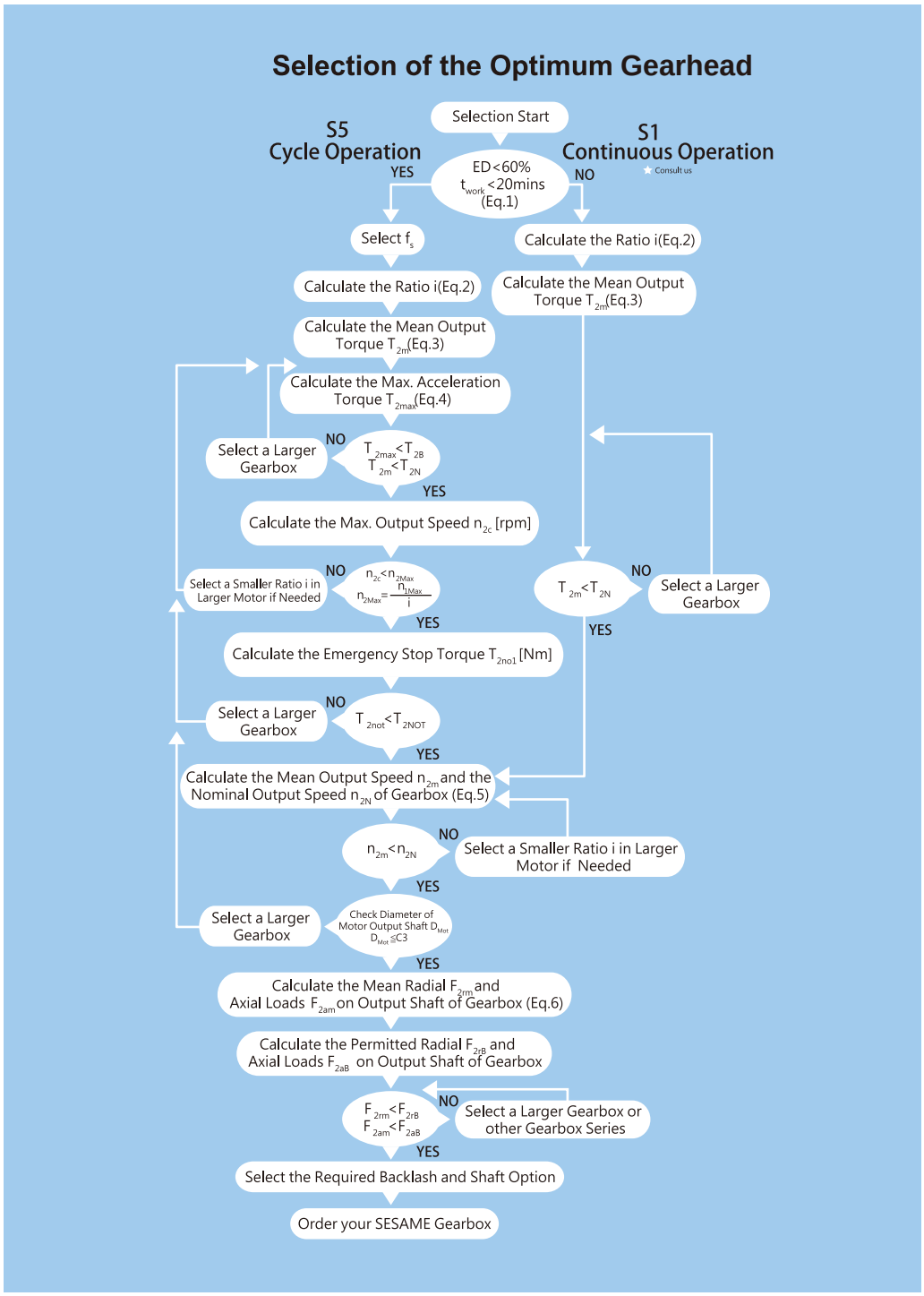


**Recommended (for S5 Cycle Operation)**

The general design is given for

$\frac{J_L}{i^2} \leqq 4 \times J_m$

The optimal design is given for

$\frac{J_L}{i^2} \leqq J_m$

$J_L$ Load Inertia

$J_m$ Motor Inertia

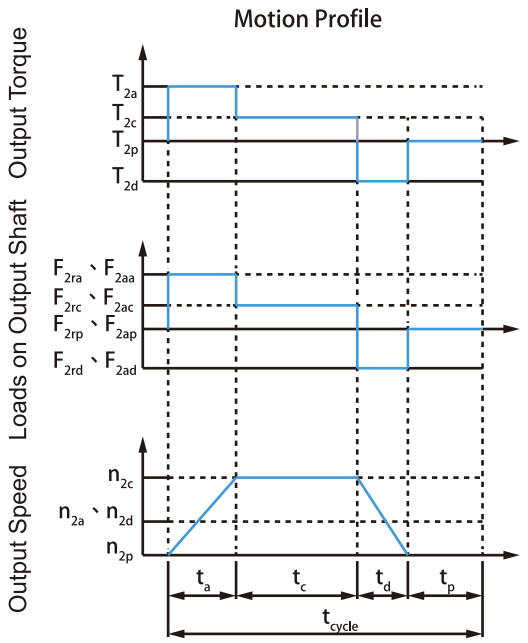


1. $ED = \frac{t_{work}}{t_{cycle}} \times 100\%,\ t_{work} = t_a + t_c + t_d$

Index：a. Acceleration, c. Constant,
d. Deceleration, p. Pause (Eq.1)

2. $i \cong \frac{n_m}{n_{work}}$

$n_m$ Output Speed of the Motor
$n_{work}$ Working Speed (Eq.2)

3. $T_{2m} = \sqrt[3]{\frac{n_{2a} \times t_a \times T_{2a}^3 \times n_{2c} \times t_c \times T_{2c}^3 + n_{2d} \times t_d \times T_{2d}^3}{n_{2a} \times t_a + n_{2c} \times t_c + n_{2d} \times t_d}}$ (Eq.3)

4. $T_{2max} = T_{mB} \times i \times f_s \times \eta$

Where $f_s$ is

| $f_s$ | No. of Cycles / hr |
|---|---|
| 1.0 | 0 ~ 1,000 |
| 1.1 | 1,000 ~ 1,500 |
| 1.3 | 1,500 ~ 2,000 |
| 1.6 | 2,000 ~ 3,000 |
| 1.8 | 3,000 ~ 5,000 |

$T_{mB}$ Max. Output Torque of the Motor
$\eta$ Efficiency of the Gearbox (Eq.4)

5. $n_{2a} = n_{2d} = \frac{1}{2} \times n_{2c}$

$$n_{2m} = \frac{n_{2a} \times t_a + n_{2c} \times t_c + n_{2d} \times t_d}{t_a + t_c + t_d}$$

$$n_{2N} = \frac{n_{1N}}{i}$$ (Eq.5)

6. $F_{2rm} = \sqrt[3]{\frac{n_{2a} \times t_a \times F_{2ra}^3 \times n_{2c} \times t_c \times F_{2rc}^3 + n_{2d} \times t_d \times F_{2rd}^3}{n_{2a} \times t_a + n_{2c} \times t_c + n_{2d} \times t_d}}$

$$F_{2am} = \sqrt[3]{\frac{n_{2a} \times t_a \times F_{2aa}^3 \times n_{2c} \times t_c \times F_{2ac}^3 + n_{2d} \times t_d \times F_{2ad}^3}{n_{2a} \times t_a + n_{2c} \times t_c + n_{2d} \times t_d}}$$ (Eq.6)

# PGR SERIES

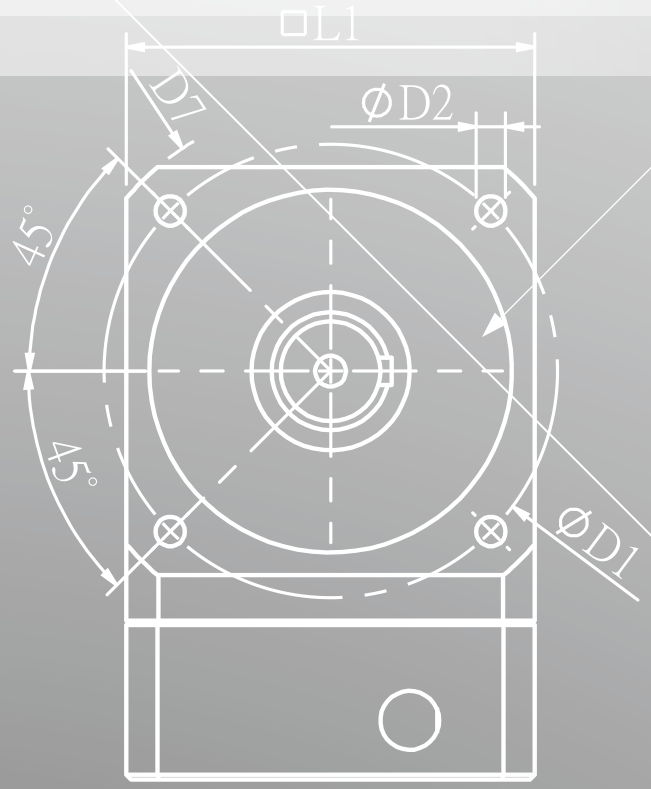


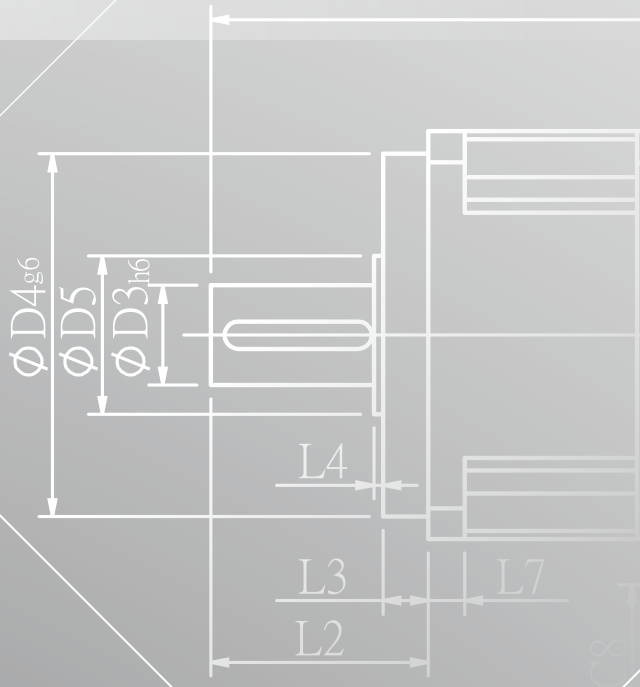


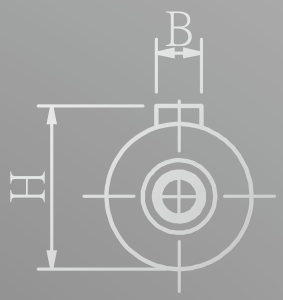

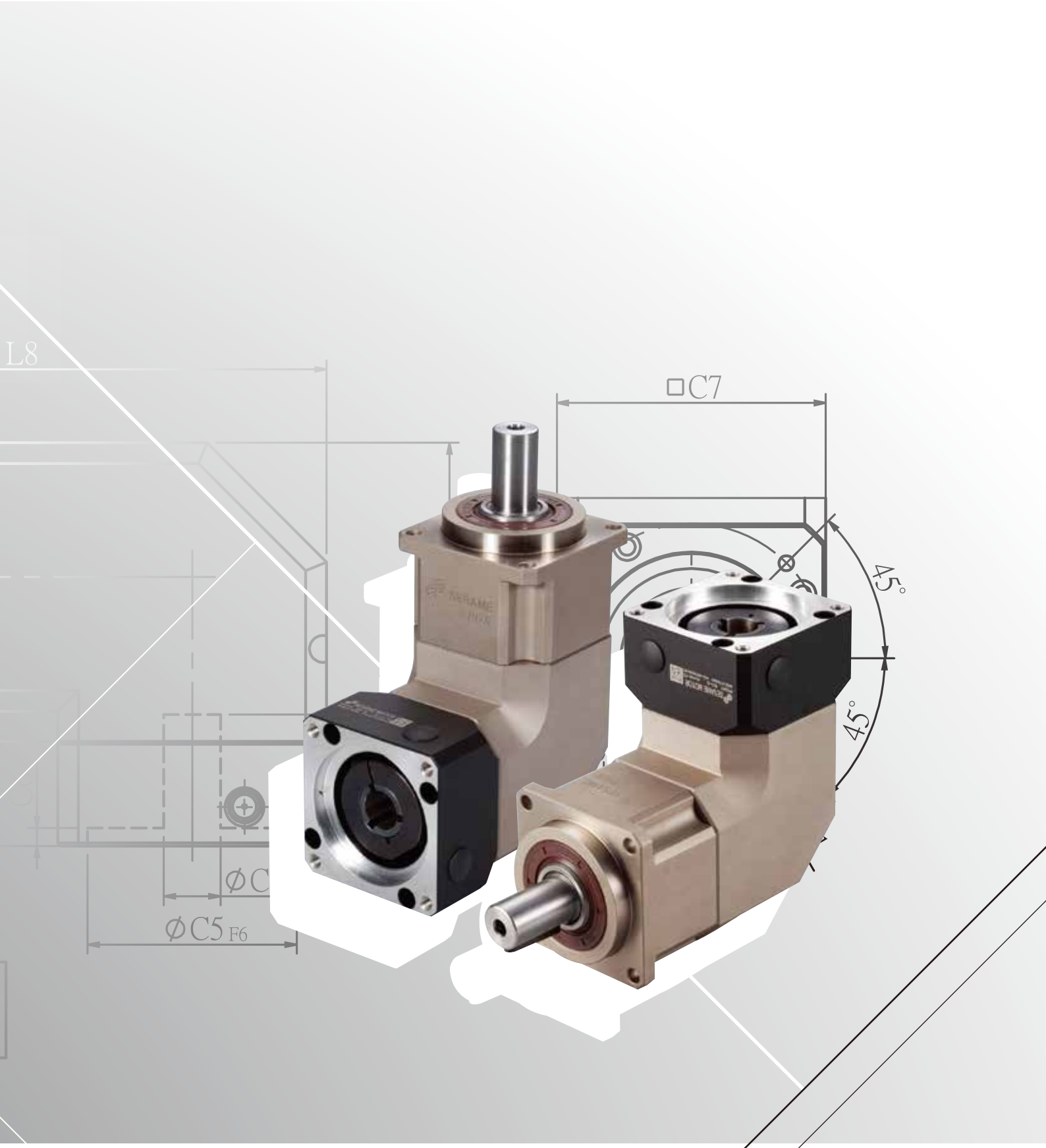
L8
□C7
45°
45°
ØC
ØC5 F6

## PGR Single Stage Dimensions

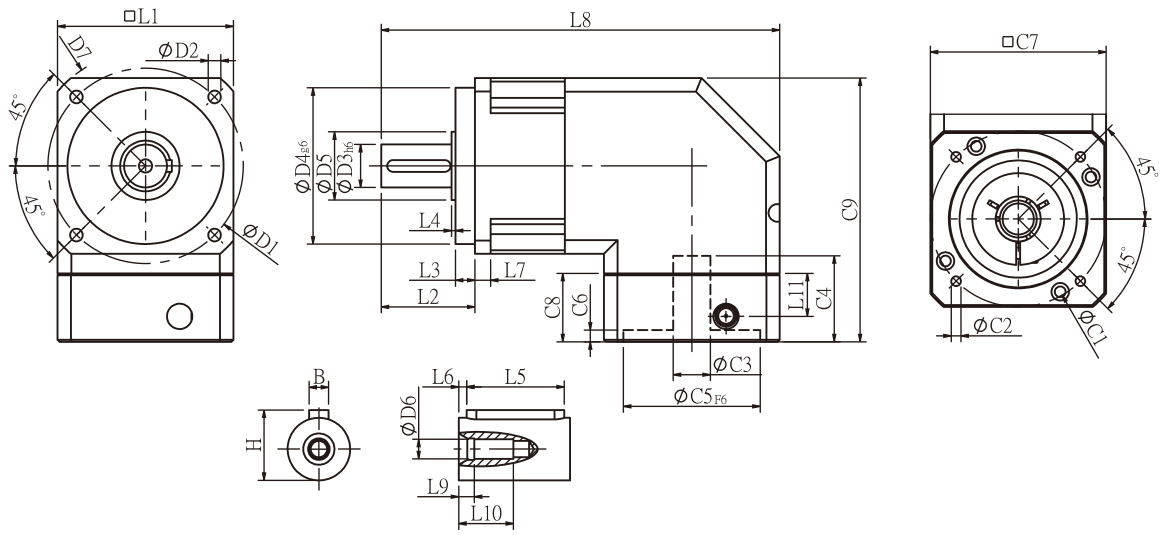


## Specifications

Unit:mm

| Dimensions | PGR42 | PGR60 | PGR90 | PGR115 | PGR142 |
|---|---|---|---|---|---|
| D1 | 50 | 70 | 100 | 130 | 165 |
| D2 | 3.4 | 5.5 | 6.5 | 8.5 | 10.5 |
| D3 h6 | 13 | 16 | 22 | 32 | 40 |
| D4 g6 | 35 | 50 | 80 | 110 | 130 |
| D5 | 15 | 25 | 35 | 45 | 50 |
| D6 | M4x0.7P | M5x0.8P | M8x1.25P | M12x1.75P | M16x2.0P |
| D7 | 56 | 80 | 118 | 148 | 186 |
| L1 | 42.6 | 60 | 90 | 115 | 142 |
| L2 | 26 | 37 | 48 | 62 | 93 |
| L3 | 5.5 | 7 | 10 | 8 | 8 |
| L4 | 1.5 | 1.5 | 1.5 | 3 | 6 |
| L5 | 15 | 25 | 32 | 40 | 60 |
| L6 | 2 | 2 | 3 | 5 | 5 |
| L7 | 4 | 6 | 8 | 12 | 18 |
| L8 | 103.6 | 148.7 | 204 | 244.5 | 330 |
| L9 | 4 | 4 | 4.5 | 6 | 6 |
| L10 | 14 | 16.5 | 20.5 | 30 | 38 |
| L11 | 13.5 | 21.5 | 22 | 32 | 44.7 |
| C1 [2] | 46 | 70 | 90 | 115 | 145 |
| C2 [2] | M4x0.7P | M5x0.8P | M6x1.0P | M8x1.25P | M8x1.25P |
| C3 [2] | ≦8/≦11 | ≦14/≦19 | ≦19/≦24 | ≦24/≦32 | ≦35 |
| C4 [2] | 29 | 34 | 44 | 53 | 75 |
| C5 [2] F6 | 30 | 50 | 70 | 95 | 110 |
| C6 [2] | 6 | 5 | 5 | 6 | 9 |
| C7 [2] | 42.6 | 60 | 90 | 115 | 140 |
| C8 [2] | 25 | 33 | 35 | 48 | 65 |
| C9 [2] | 70.8 | 107.8 | 135 | 174.5 | 207 |
| B | 5 | 5 | 6 | 10 | 12 |
| H | 15 | 18 | 24.5 | 35 | 43 |

★ C1~C9 are motor specific dimensions (metric std shown). Size may vary according to motor flange.

★ Specification subject to change without notice.

## PGR Double Stage Dimensions-1

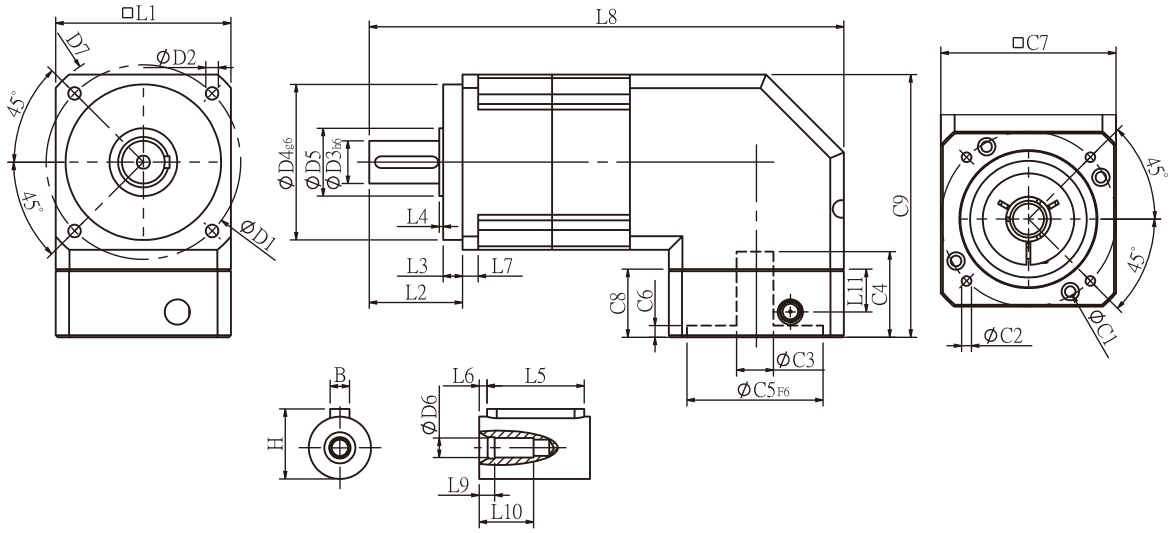


## Specifications

Unit:mm

| Dimensions | PGR42 | PGR60 | PGR90 | PGR115 | PGR142 |
|---|---|---|---|---|---|
| D1 | 50 | 70 | 100 | 130 | 165 |
| D2 | 3.4 | 5.5 | 6.5 | 8.5 | 10.5 |
| D3 h6 | 13 | 16 | 22 | 32 | 40 |
| D4 g6 | 35 | 50 | 80 | 110 | 130 |
| D5 | 15 | 25 | 35 | 45 | 50 |
| D6 | M4x0.7P | M5x0.8P | M8x1.25P | M12x1.75P | M16x2.0P |
| D7 | 56 | 80 | 118 | 148 | 186 |
| L1 | 42.6 | 60 | 90 | 115 | 142 |
| L2 | 26 | 37 | 48 | 62 | 93 |
| L3 | 5.5 | 7 | 10 | 8 | 8 |
| L4 | 1.5 | 1.5 | 1.5 | 3 | 6 |
| L5 | 15 | 25 | 32 | 40 | 60 |
| L6 | 2 | 2 | 3 | 5 | 5 |
| L7 | 4 | 6 | 8 | 12 | 18 |
| L8 | 129.6 | 176.7 | 244 | 292.5 | 391 |
| L9 | 4 | 4 | 4.5 | 6 | 6 |
| L10 | 14 | 16.5 | 20.5 | 30 | 38 |
| L11 | 13.5 | 21.5 | 22 | 32 | 44.7 |
| C1 [2] | 46 | 70 | 90 | 115 | 145 |
| C2 [2] | M4x0.7P | M5x0.8P | M6x1.0P | M8x1.25P | M8x1.25P |
| C3 [2] | ≦8/≦11 | ≦14/≦19 | ≦19/≦24 | ≦24/≦32 | ≦35 |
| C4 [2] | 29 | 34 | 44 | 53 | 75 |
| C5 [2] F6 | 30 | 50 | 70 | 95 | 110 |
| C6 [2] | 6 | 5 | 5 | 6 | 9 |
| C7 [2] | 42.6 | 60 | 90 | 115 | 140 |
| C8 [2] | 25 | 33 | 35 | 48 | 65 |
| C9 [2] | 70.8 | 107.8 | 135 | 174.5 | 207 |
| B | 5 | 5 | 6 | 10 | 12 |
| H | 15 | 18 | 24.5 | 35 | 43 |

★ C1~C9 are motor specific dimensions (metric std shown). Size may vary according to motor flange.

★ Specification subject to change without notice.

## PGR Double Stage Dimensions-2

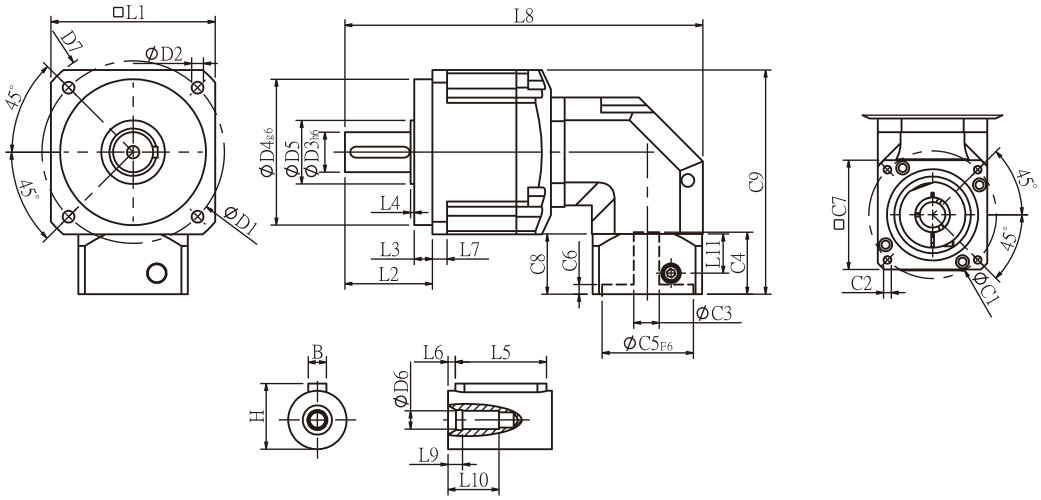


## Specifications

Unit:mm

| Dimensions | PGR60T | PGR90T | PGR115T | PGR142T |
|---|---|---|---|---|
| D1 | 70 | 100 | 130 | 165 |
| D2 | 5.5 | 6.5 | 8.5 | 10.5 |
| D3h6 | 16 | 22 | 32 | 40 |
| D4g6 | 50 | 80 | 110 | 130 |
| D5 | 25 | 35 | 45 | 50 |
| D6 | M5x0.8P | M8x1.25P | M12x1.75P | M16x2.0P |
| D7 | 80 | 118 | 148 | 186 |
| L1 | 60 | 90 | 115 | 142 |
| L2 | 37 | 48 | 62 | 93 |
| L3 | 7 | 10 | 8 | 8 |
| L4 | 1.5 | 1.5 | 3 | 6 |
| L5 | 25 | 32 | 40 | 60 |
| L6 | 2 | 3 | 5 | 5 |
| L7 | 6 | 8 | 12 | 18 |
| L8 | 145.1 | 196.2 | 269.4 | 343.5 |
| L9 | 4 | 4.5 | 6 | 6 |
| L10 | 16.5 | 20.5 | 30 | 38 |
| L11 | 13.5 | 21.5 | 22 | 32 |
| C1 [2] | 46 | 70 | 90 | 115 |
| C2 [2] | M4x0.7P | M5x0.8P | M6x1.0P | M8x1.25P |
| C3 [2] | ≦8/≦11 | ≦14/≦19 | ≦19/≦24 | ≦24/≦32 |
| C4 [2] | 29 | 34 | 44 | 53 |
| C5 [2] F6 | 30 | 50 | 70 | 95 |
| C6 [2] | 6 | 5 | 5 | 6 |
| C7 [2] | 42.6 | 60 | 90 | 115 |
| C8 [2] | 25 | 33 | 35 | 48 |
| C9 [2] | 79.5 | 122.8 | 147.5 | 188 |
| B | 5 | 6 | 10 | 12 |
| H | 18 | 24.5 | 35 | 43 |

★ C1~C9 are motor specific dimensions (metric std shown). Size may vary according to motor flange.

★ Specification subject to change without notice.

## PGR Specifications Table

| Specifications | | Stage | Ratio | PGR-42 | PGR-60 | PGR-90 | PGR-115 | PGR-142 |
|---|---|---|---|---|---|---|---|---|
| Nominal Output Torque $T_{2N}$ | N · m | 1 | 3 | 13.8 | 35.3 | 76.2 | 220 | 380 |
| | | | 4 | 11.9 | 35.9 | 74.6 | 249 | 450 |
| | | | 5 | 13.8 | 43.0 | 95.2 | 283 | 473 |
| | | | 6 | 12.5 | 39.4 | 90.9 | 220 | 420 |
| | | | 7 | 11.9 | 36.0 | 85.6 | 219 | 400 |
| | | | 8 | 10.9 | 32.4 | 85.0 | 216 | 363 |
| | | | 9 | 9.8 | 28.7 | 80.0 | 210 | 320 |
| | | | 10 | 13.8 | 43.0 | 95.2 | 260 | 473 |
| | | Stage | Ratio | PGR-42 | PGR-60 / 60T | PGR-90 / 90T | PGR-115 / 115T | PGR-142 / 142T |
| | | 2 | 15 | 13.8 | 44.2 | 95.2 | 283 | 482 |
| | | | 20 | 11.9 | 35.9 | 74.6 | 249 | 490 |
| | | | 25 | 13.8 | 43.0 | 95.2 | 283 | 473 |
| | | | 30 | 13.8 | 43.0 | 95.2 | 283 | 473 |
| | | | 35 | 13.8 | 43.0 | 95.2 | 283 | 473 |
| | | | 40 | 13.8 | 43.0 | 95.2 | 283 | 473 |
| | | | 45 | 13.8 | 43.0 | 95.2 | 283 | 473 |
| | | | 50 | 13.8 | 43.0 | 95.2 | 283 | 473 |
| | | | 60 | 12.5 | 39.4 | 90.9 | 266 | 436 |
| | | | 70 | 11.9 | 36.0 | 85.6 | 219 | 400 |
| | | | 80 | 10.9 | 32.4 | 85.0 | 216 | 363 |
| | | | 90 | 9.8 | 28.7 | 80.0 | 210 | 320 |
| | | | 100 | 10.1 | 25.0 | 75.0 | 210 | 320 |
| Emergency Stop Torque $T_{2NOT}$ | N · m | | (3.0 times of Nominal Output Torque)<br>( * Max. Output Torque $T_{2B}$ =60% of Emergency Stop Torque) | | | | | |
| Nominal Input Speed $n_{1N}$ | rpm | 1,2 | 3-100 | 3000 | 3000 | 3000 | 2500 | 2000 |
| Max. Input Speed $n_{1max}$ | rpm | 1,2 | 3-100 | 6000 | 6000 | 6000 | 5000 | 4000 |
| Micro Backlash P0 | arcmin | 1<br>2 | 3-10<br>15-100 | -<br>- | -<br>- | -<br>- | ≦4<br>≦6 | ≦4<br>≦6 |
| Precision Backlash P1 | arcmin | 1<br>2 | 3-10<br>15-100 | -<br>- | -<br>- | ≦6<br>≦9 | ≦6<br>≦8 | ≦6<br>≦8 |
| Standard Backlash P2 | arcmin | 1<br>2 | 3-10<br>15-100 | ≦12<br>≦15 | ≦9<br>≦12 | ≦9<br>≦12 | ≦9<br>≦11 | ≦9<br>≦11 |
| Torsional Rigidity | N · m /arcmin | 1,2 | 3-100 | 1.0 | 2.8 | 7.5 | 15.5 | 30 |
| Max. Radial Load $F_{2rB}$ [1] | N | 1,2 | 3-100 | 350 | 960 | 1630 | 3380 | 6150 |
| Max. Axial Load $F_{2aB}$ [1] | N | 1,2 | 3-100 | 320 | 900 | 1420 | 2930 | 5510 |
| Operating Temp. | ℃ | | 3-100 | -10℃ ~ +90℃ | | | | |
| Service Life | hr | | 3-100 | 20,000 (10,000 Continuous operation) | | | | |
| Efficiency | % | 1<br>2 | 3-10<br>15-100 | ≧94%<br>≧90% | | | | |
| Weight | kg | 1<br>2 | 3-10<br>15-100 | 1.0<br>1.3 | 2.5<br>3.2/2.8 | 6.5<br>8.6/6.9 | 13.2<br>17.7/14.5 | 24.6<br>29.7/26.2 |
| Mounting Position | - | 1,2 | 3-100 | Any direction | | | | |
| Noise Level [2] | dBA/1m | 1,2 | 3-100 | 65 | 67 | 70 | 70 | 75 |
| Protection Class | - | 1,2 | 3-100 | IP65 | | | | |
| Lubrication | - | 1,2 | 3-100 | Synthetic Lubricant | | | | |

Inertia (J1)

| Stage | Ratio | unit | PGR-42 | PGR-60 | PGR-90 | PGR-115 | PGR-142 |
|---|---|---|---|---|---|---|---|
| 1 | 3/4/5/7/9 | Kg · cm² | 0.06 | 0.40 | 2.28 | 6.87 | 24.2 |
| | 6/8/10 | | 0.05 | 0.30 | 1.45 | 4.76 | 14.5 |
| Stage | Ratio | | PGR-42 | PGR-60(T) | PGR-90(T) | PGR-115(T) | PGR-142(T) |
| 2 | 15/20/25/35/45 | | 0.06 | 0.40(0.08) | 2.28(0.72) | 6.87(3.02) | 24.2(7.83) |
| | others | | 0.05 | 0.30(0.06) | 1.45(0.38) | 4.76(1.64) | 14.5(5.00) |

* 1. Applied to the output shaft center at 100 rpm.
* 2. Measured at 3000 rpm with no load. These values are measured by gearbox with ratio = 10 (1-stage) or ratio = 100 (2-stage) at nominal input speed or 3000 rpm (if nominal input speed is higher than 3000 rpm) with no load.
* 3. PGR115T-□□-P0 is not applicable.

※ The above figures/specifications are subject to change without prior notice.

Products due to human error, natural disasters or other factors lead to poor or damaged, will not be covered under warranty.