COMPACT RESERVOIR

Mod by
Ryk Field

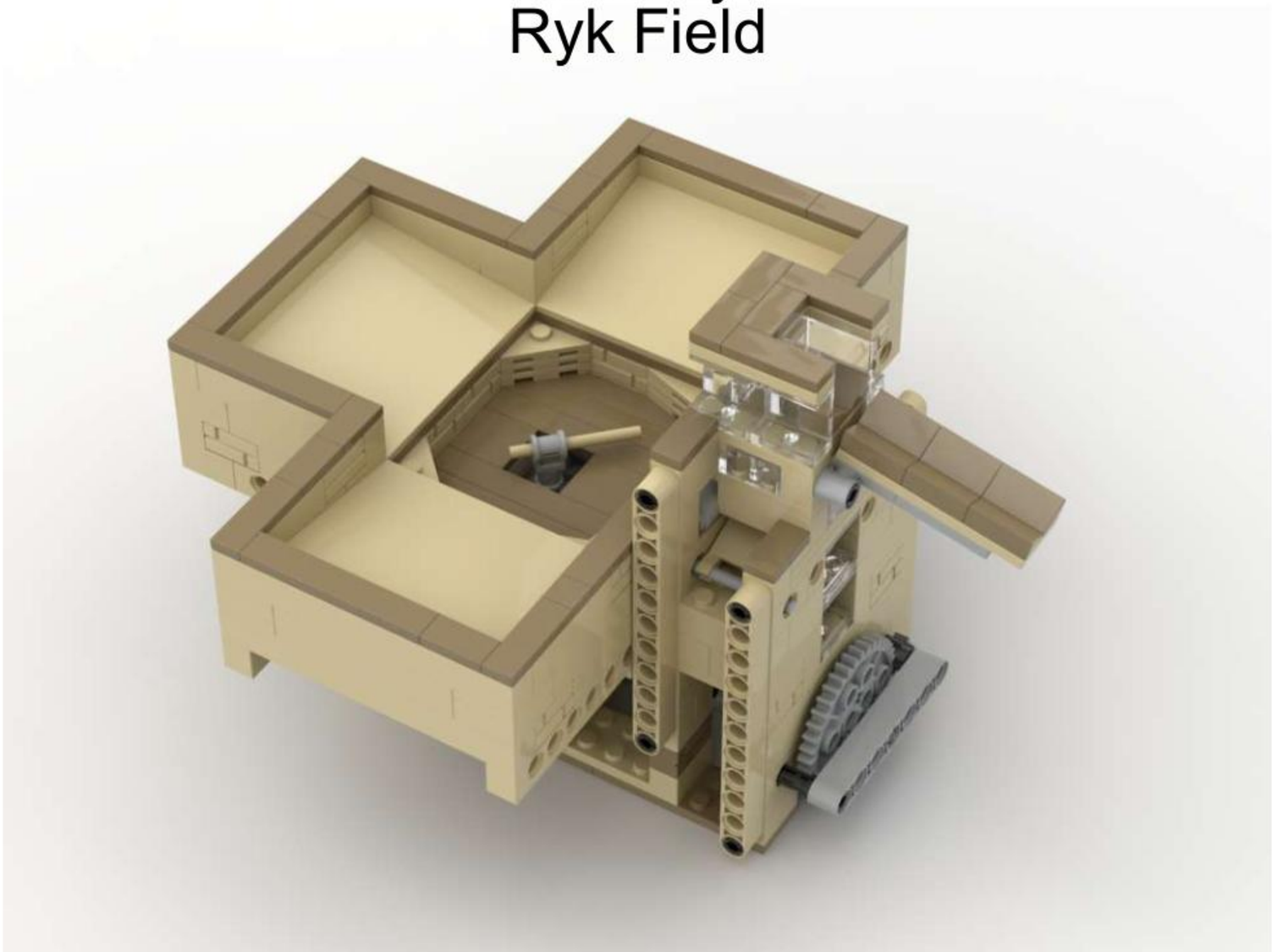

Version 1.0

Copyright 2019
Attribution-NonCommercial 4.0 International (CC BY-NC 4.0)
https://creativecommons.org/licenses/by-nc/4.0/

MOD01

This Compact Reservoir is a modified version of the BW 2018 Ball Pump by Brian Alano.

I wanted to build a small reservoir module with large overhangs to use at corners of my GBC setup, and chose to modify this well-built, reliable ball pump for the purpose.

The pumping mechanics of this reservoir are unchanged from the original design. Some structural and aesthetic changes have been made to support the geometry of this reservoir.

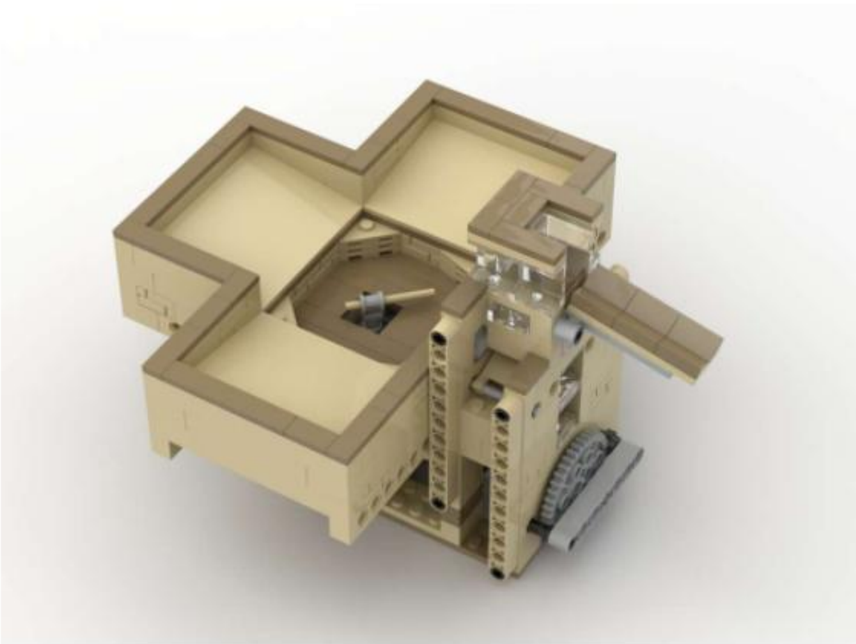

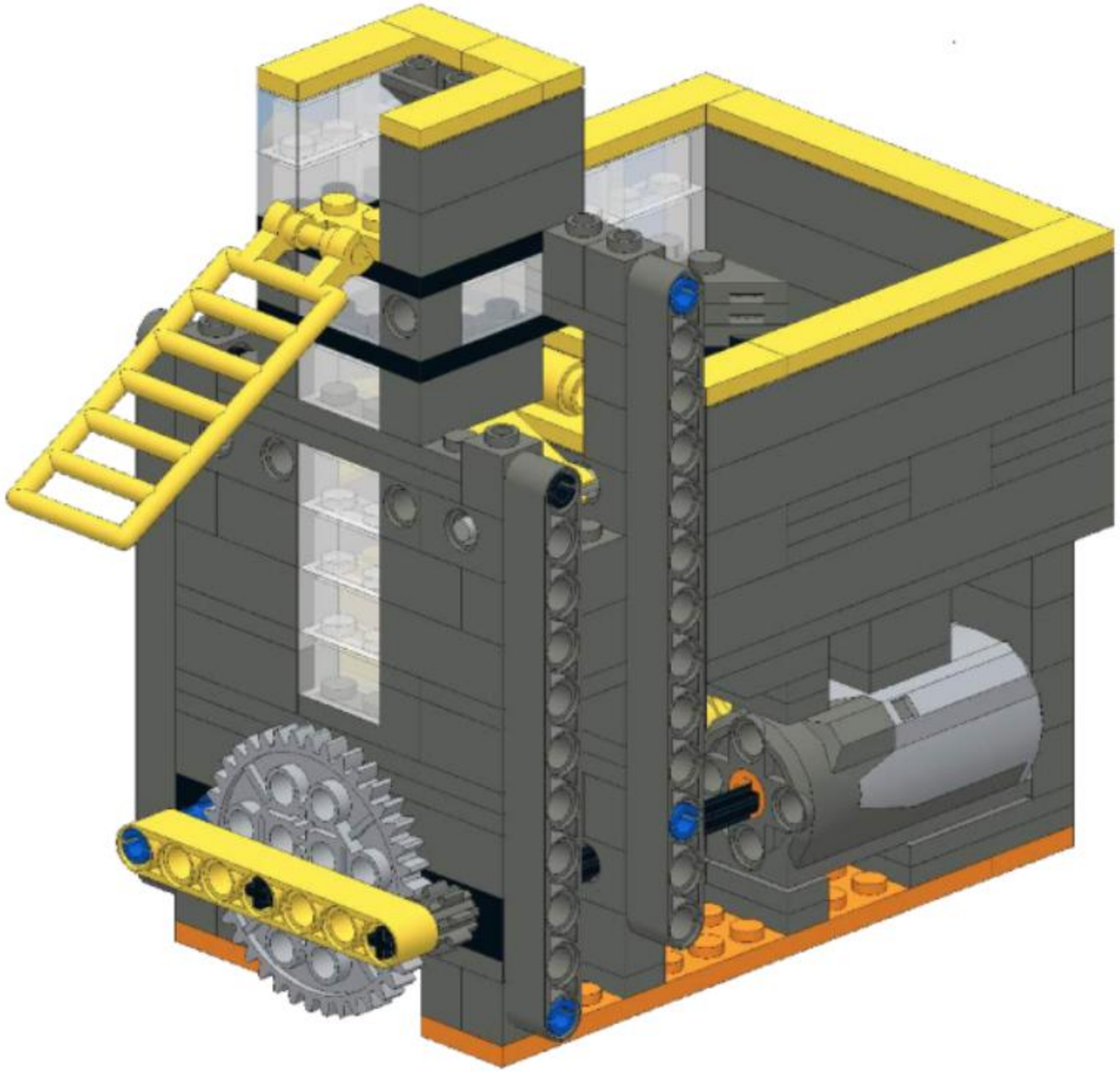

2018 Brickworld Ball Pump with Check Valve
Design by Brian Alano
Contributions from
Tom Atkinson, Bryan Bonahoom
and Bob Luzenski

https://brickworld.com/2018-gbc-workshop-kit/

1

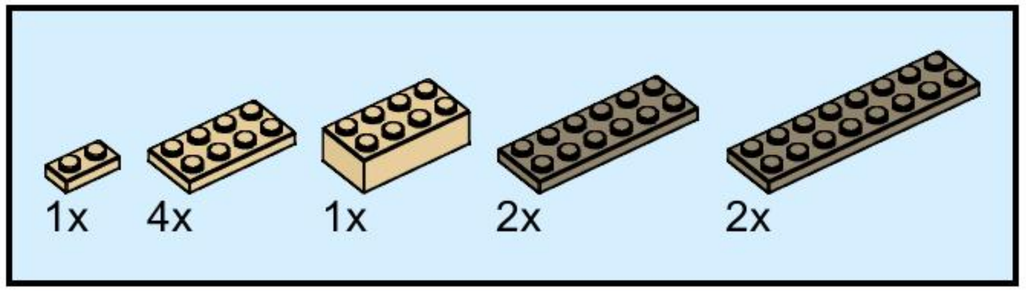

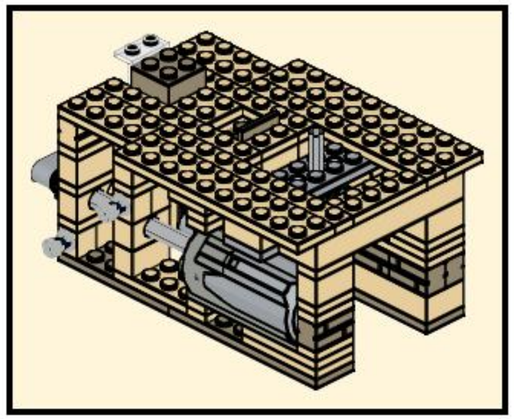

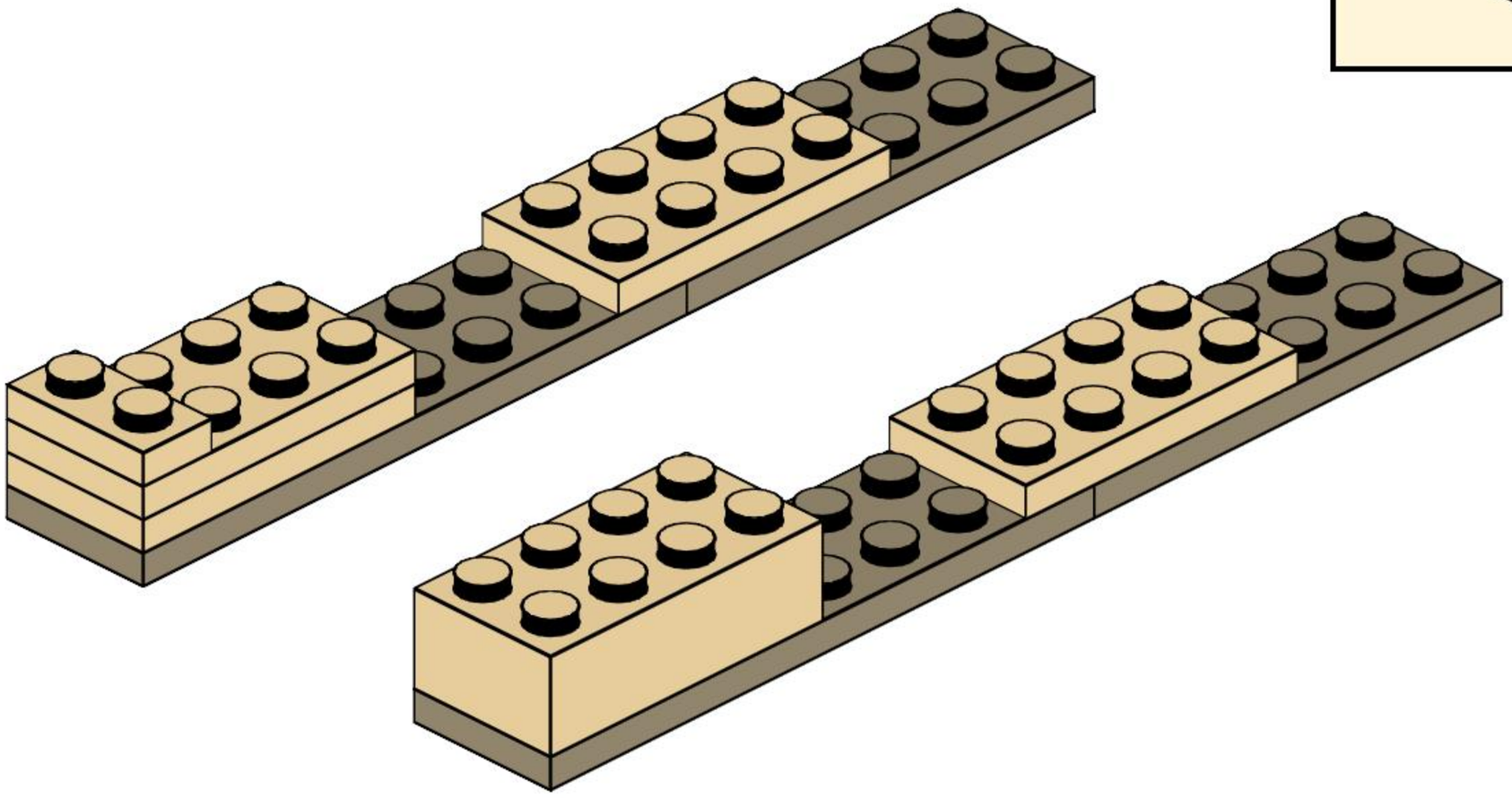

2

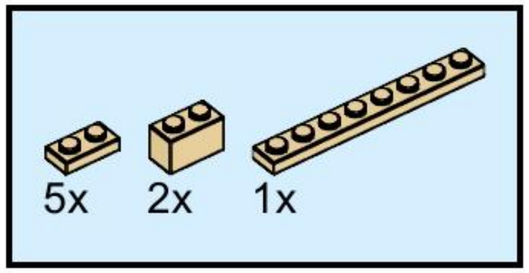

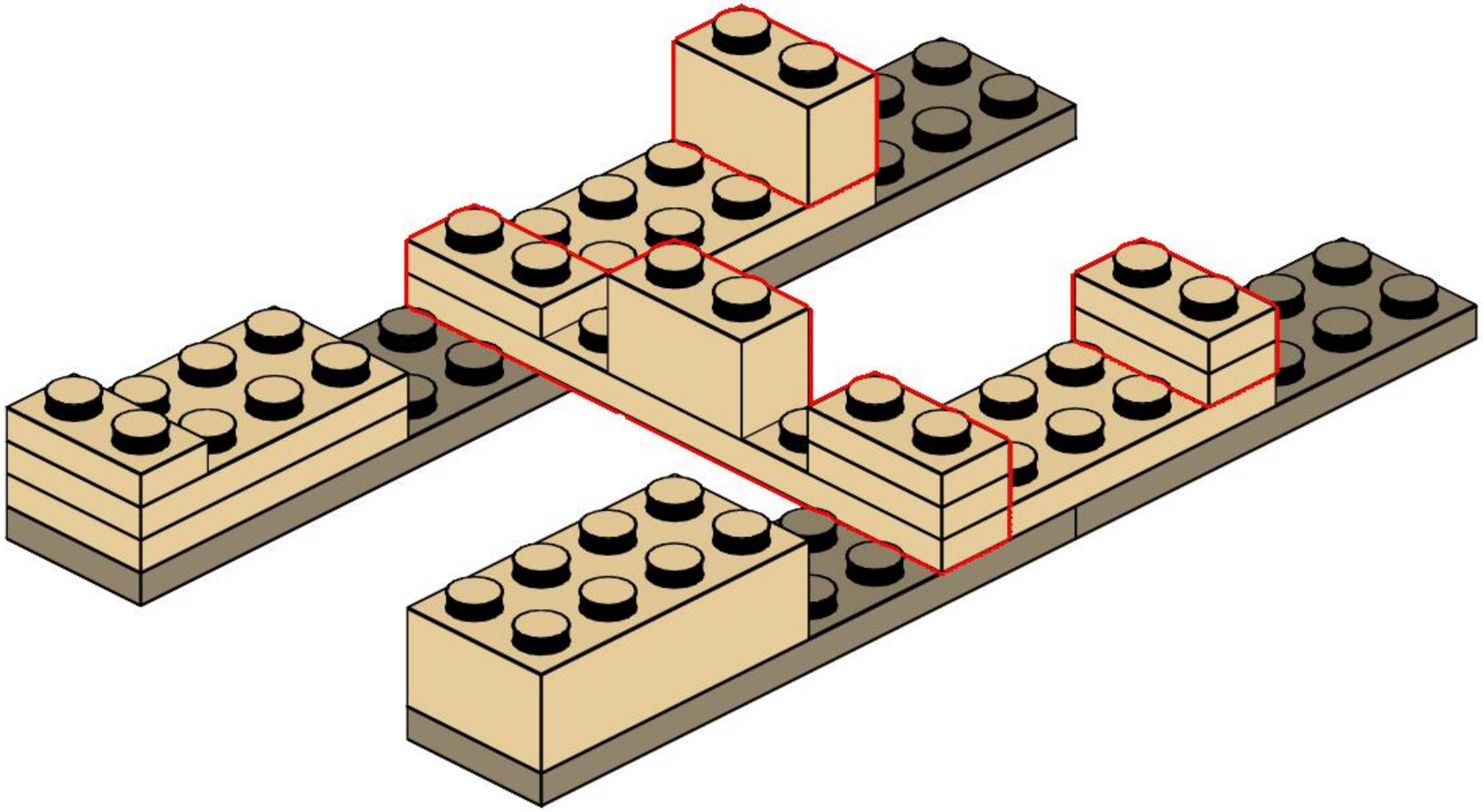

3

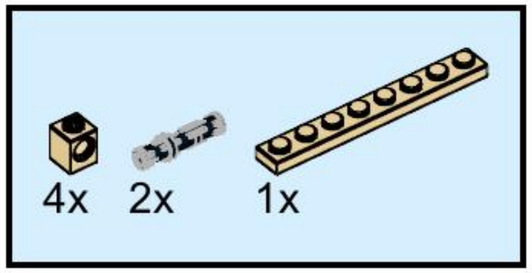

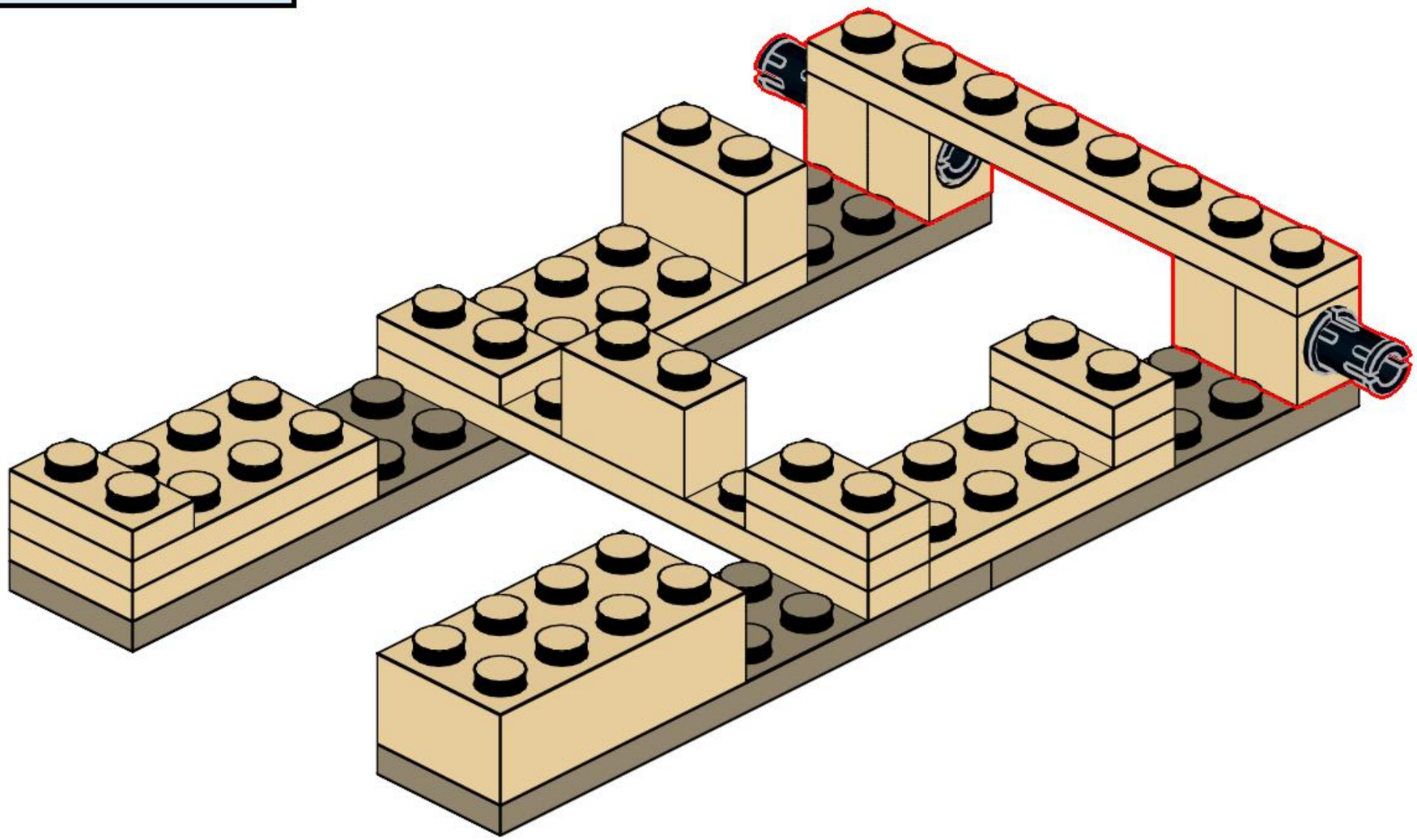

4

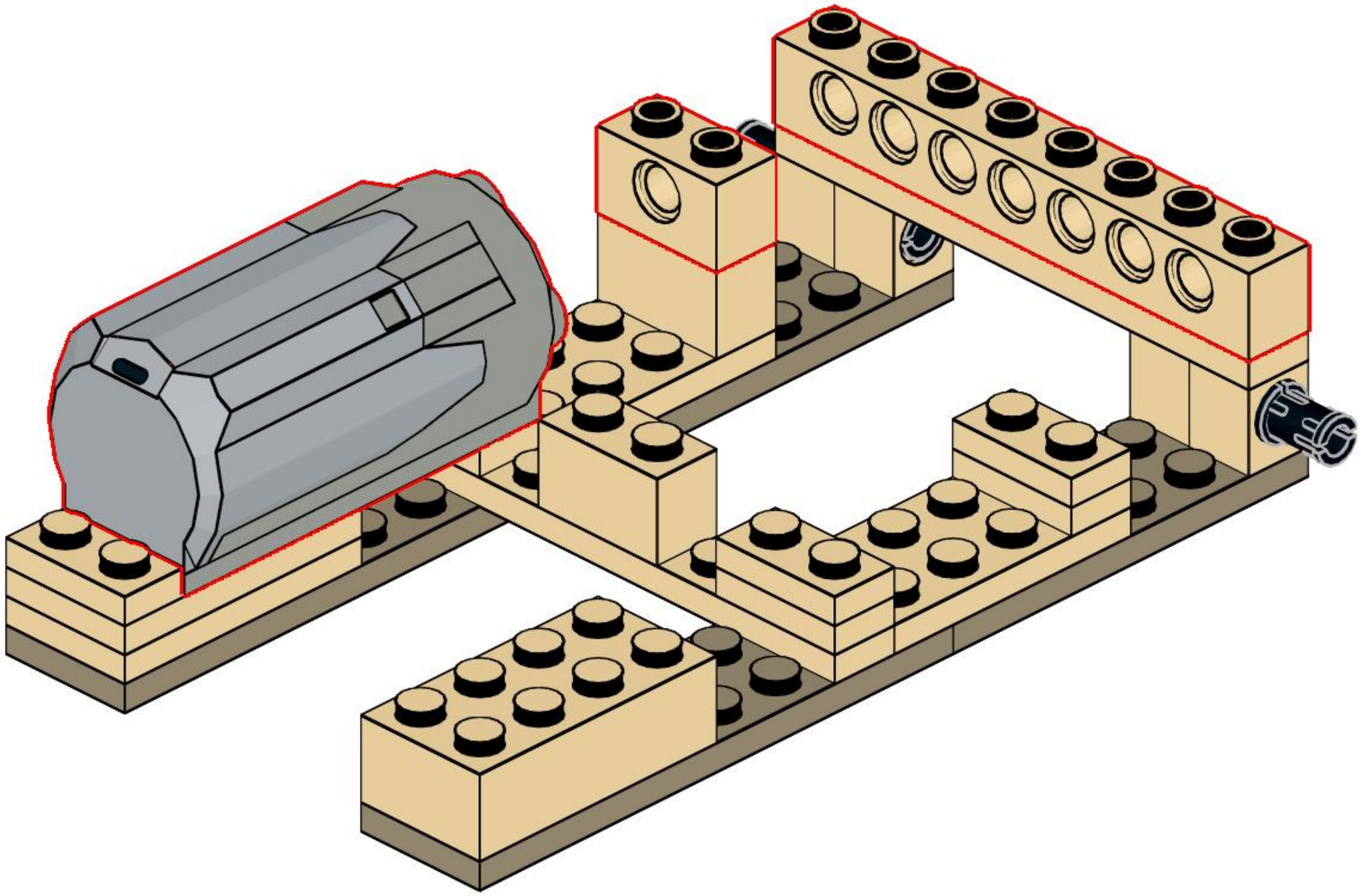

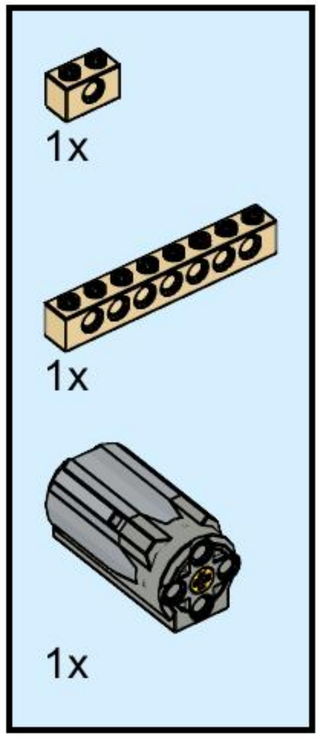

5

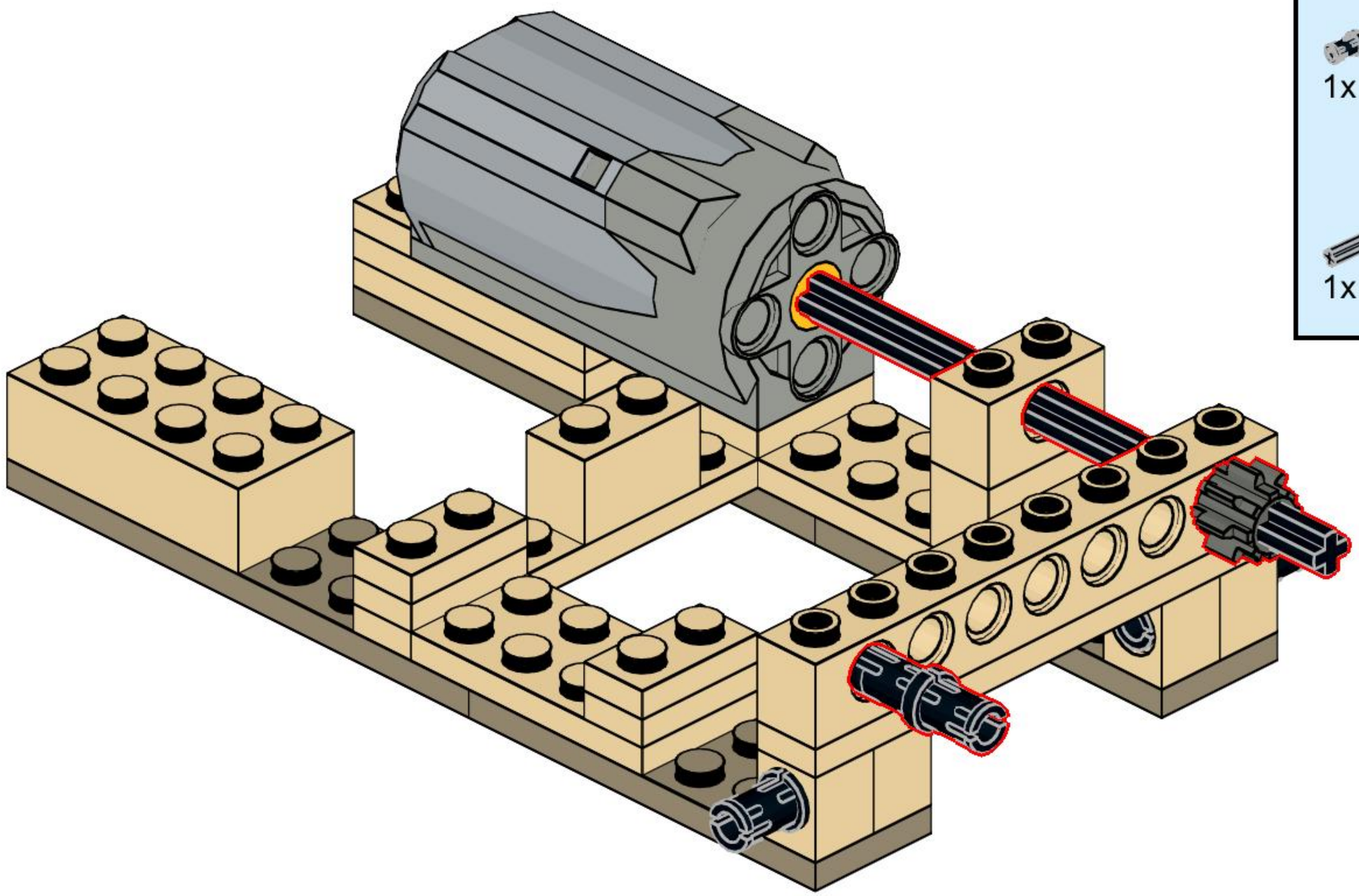

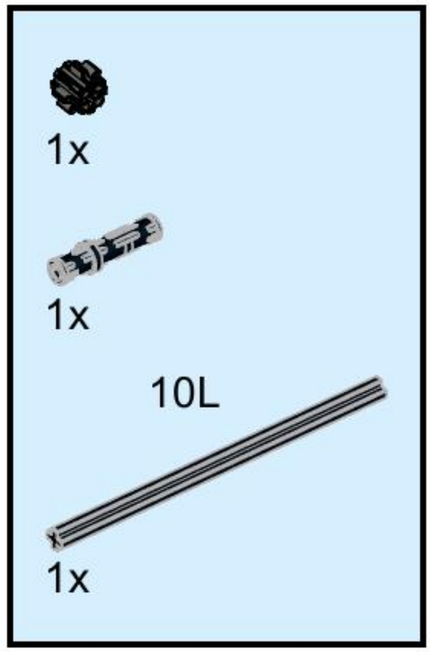

6

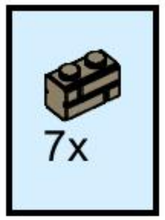

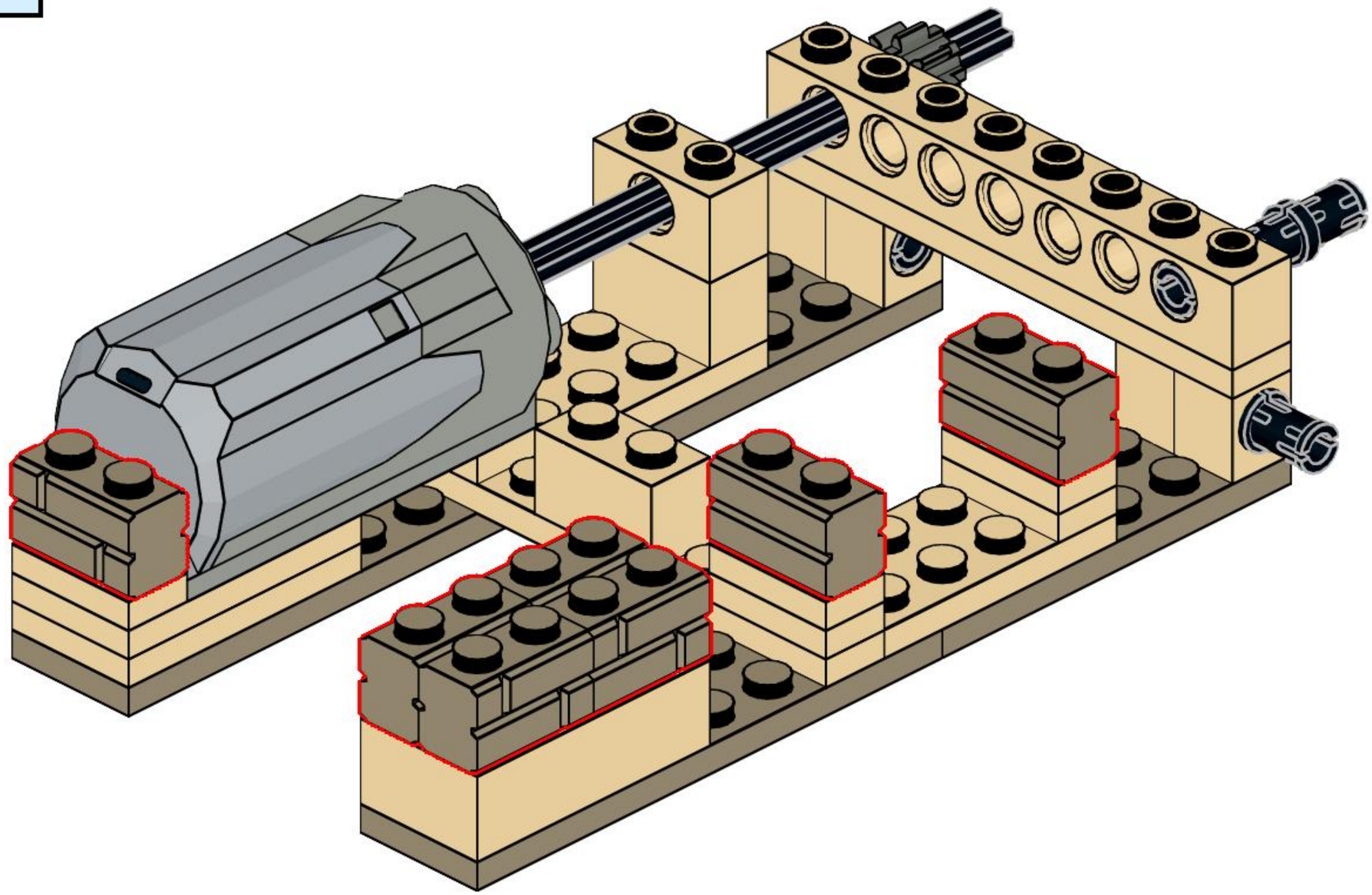

7

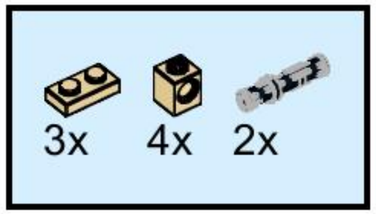

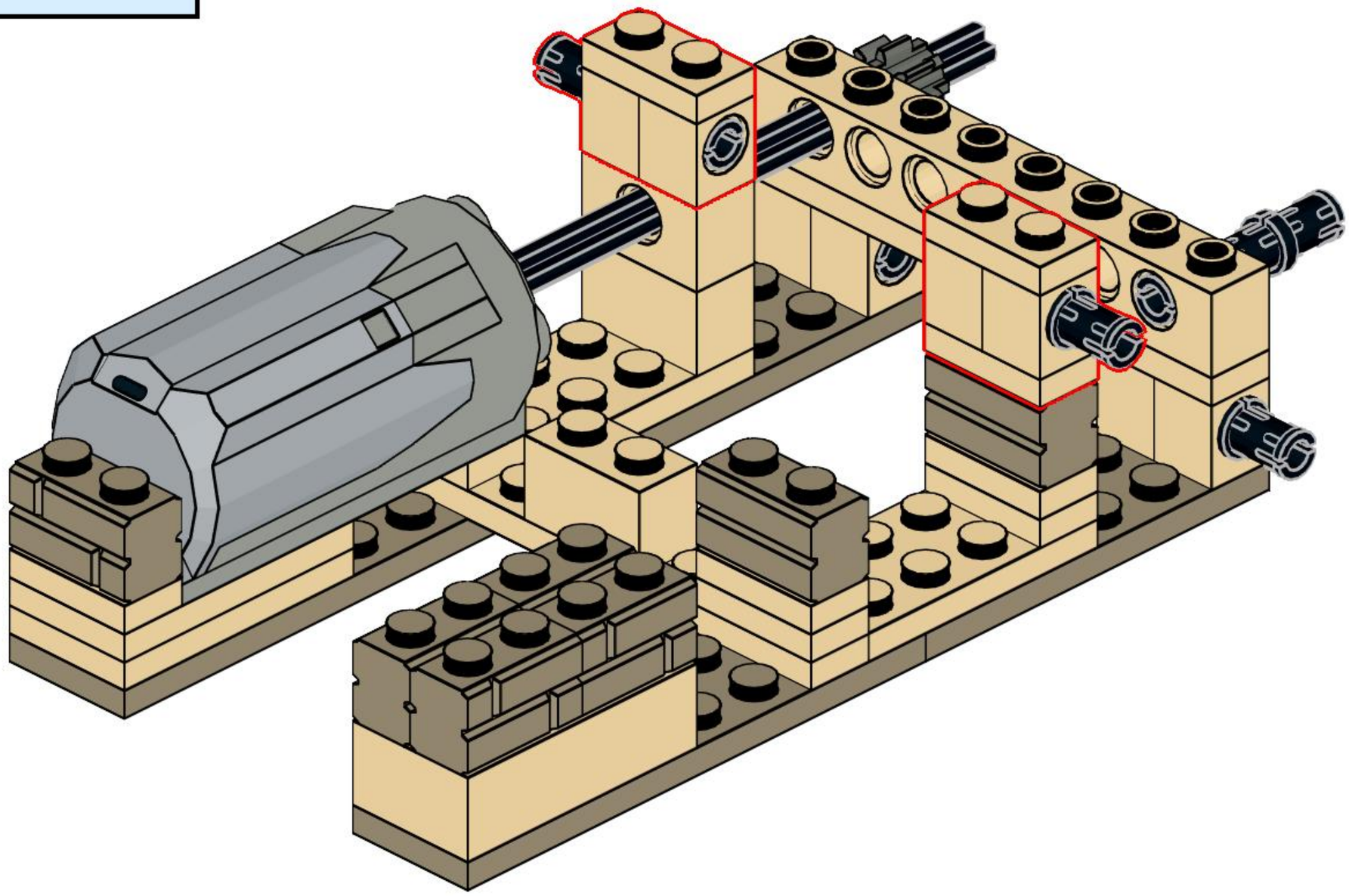

8

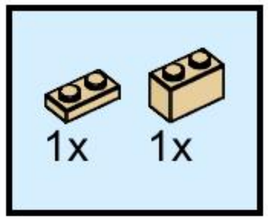

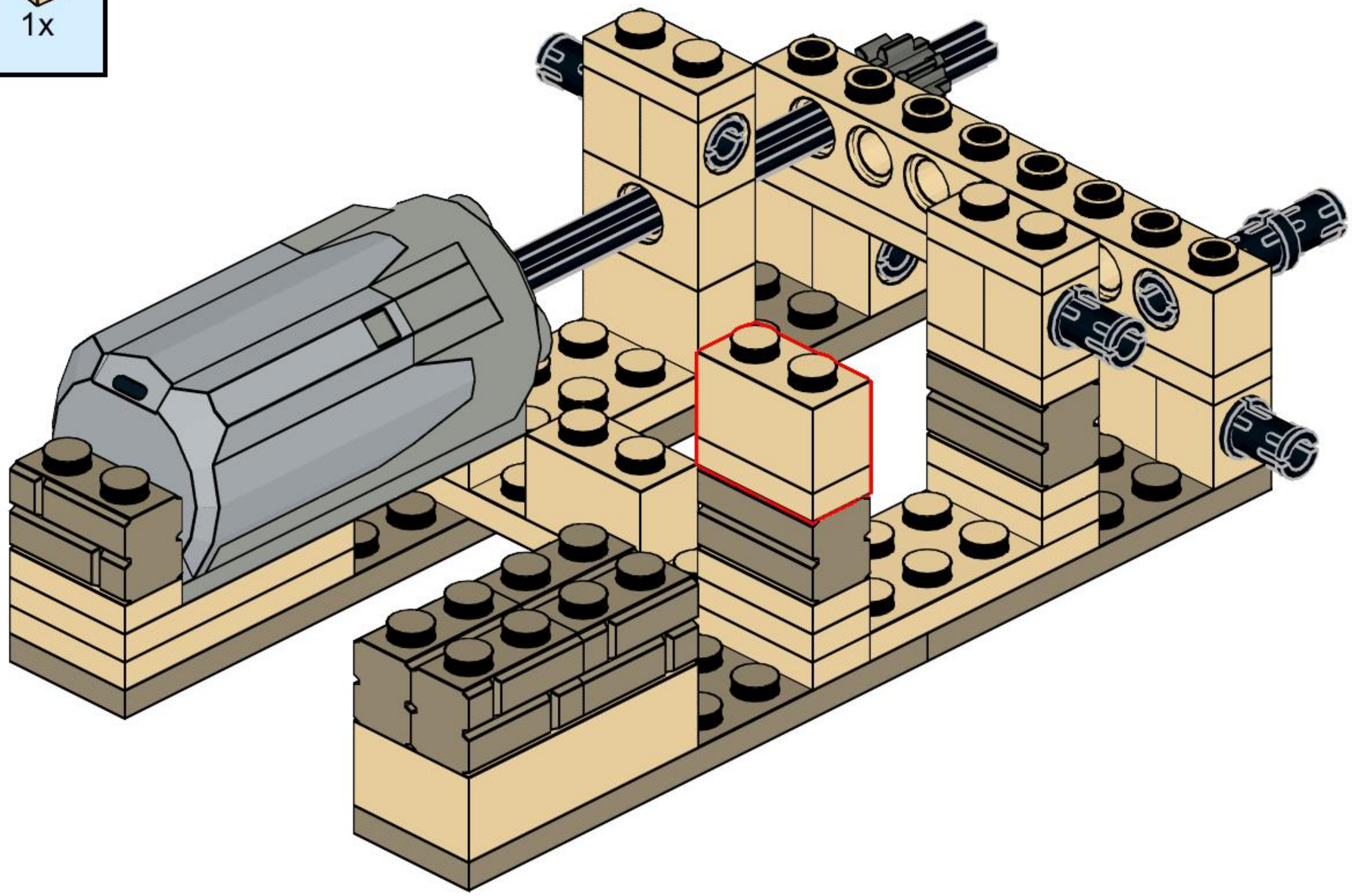

9

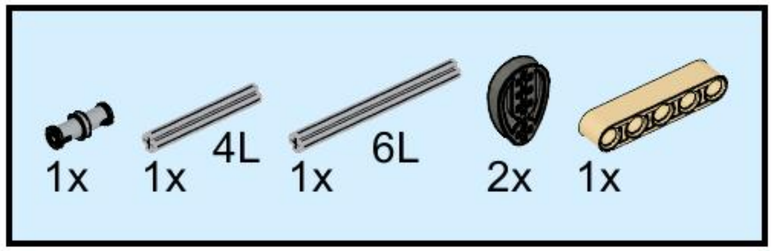

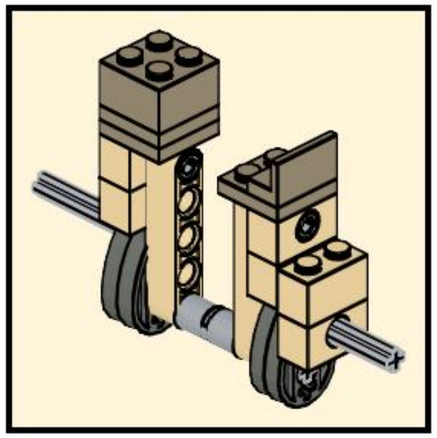

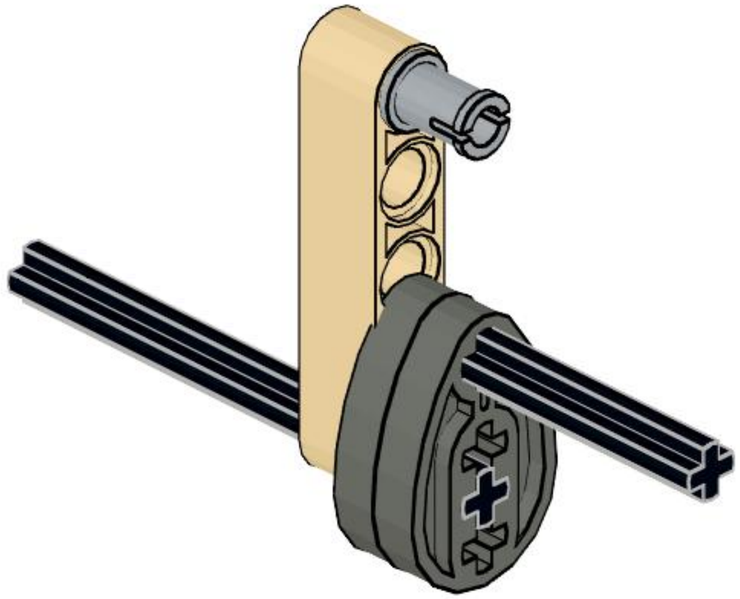

10

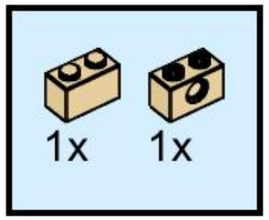

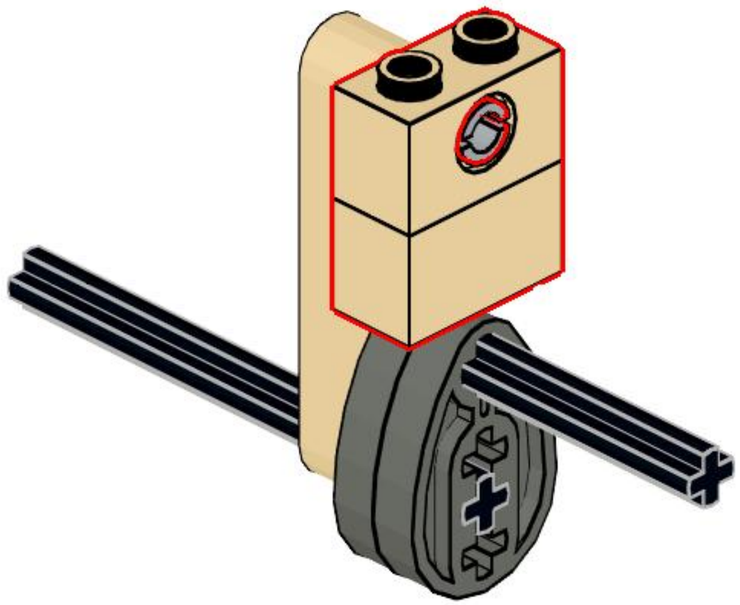

11

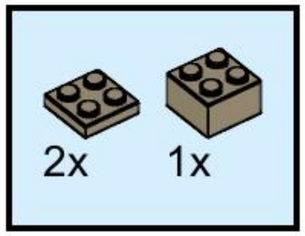

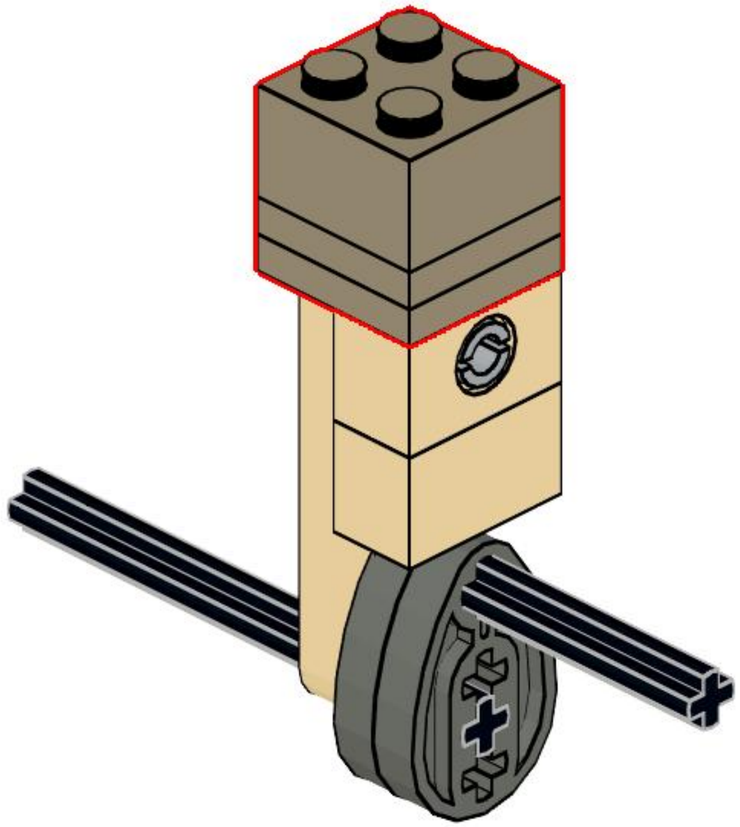

12

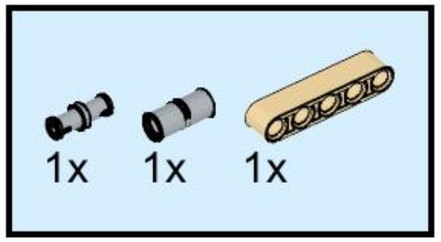

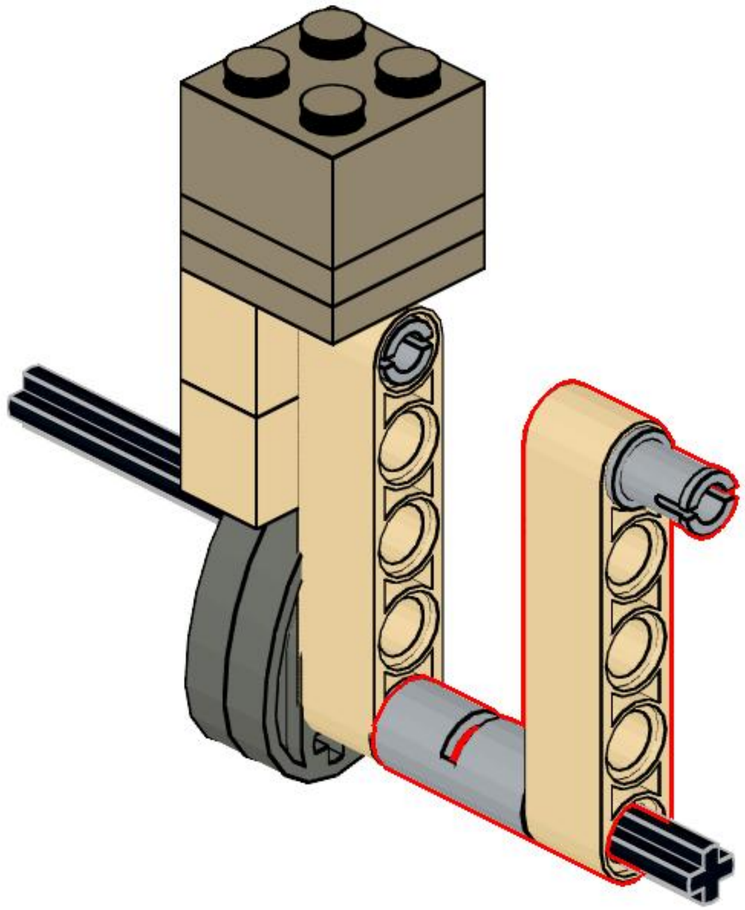

13

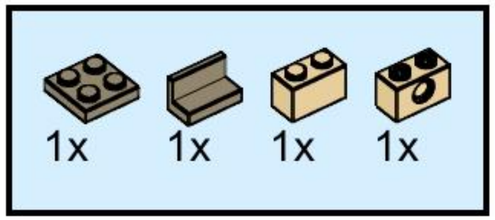

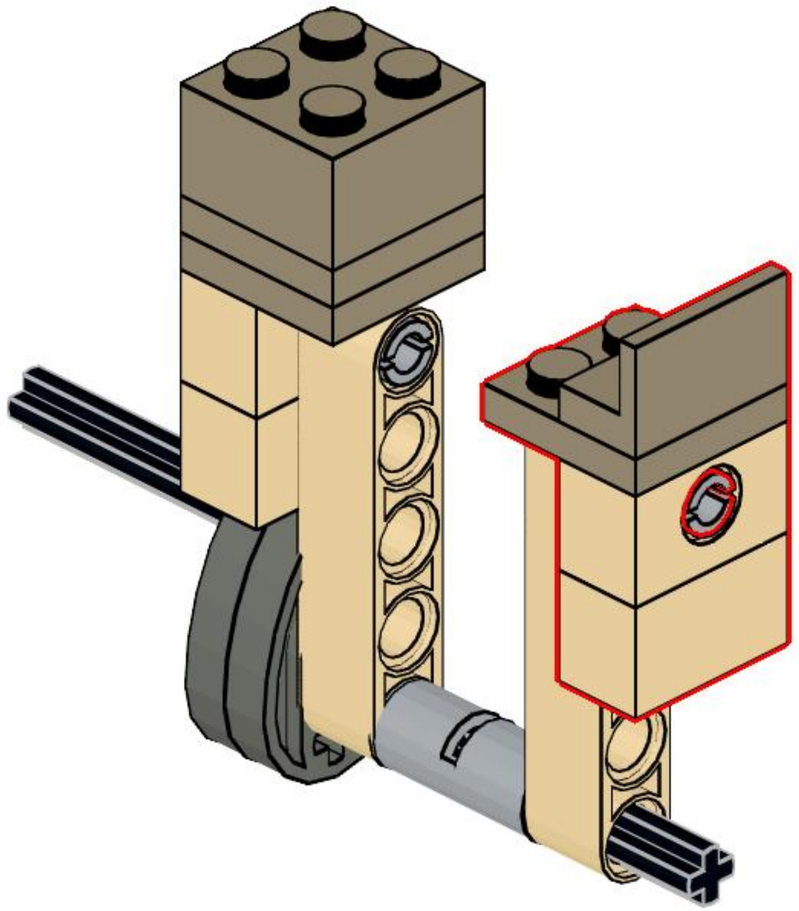

14

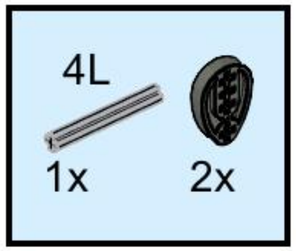

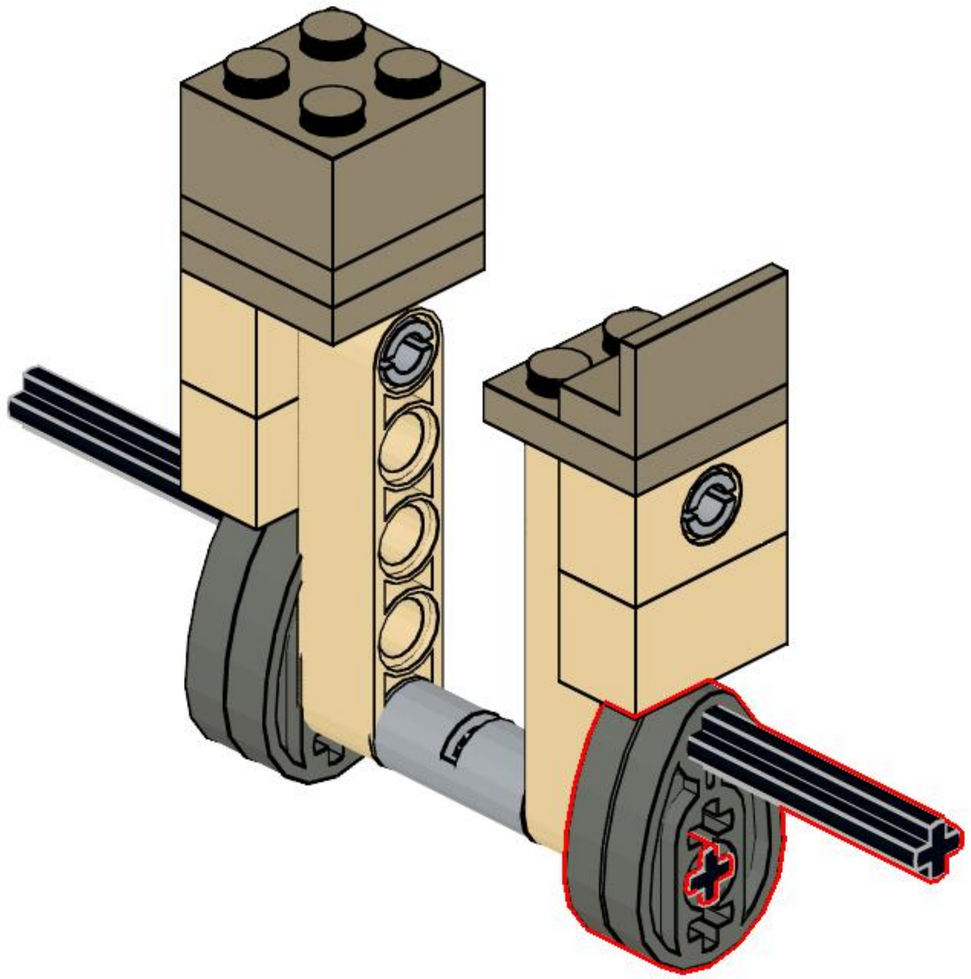

15

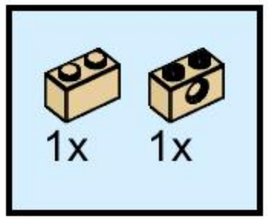

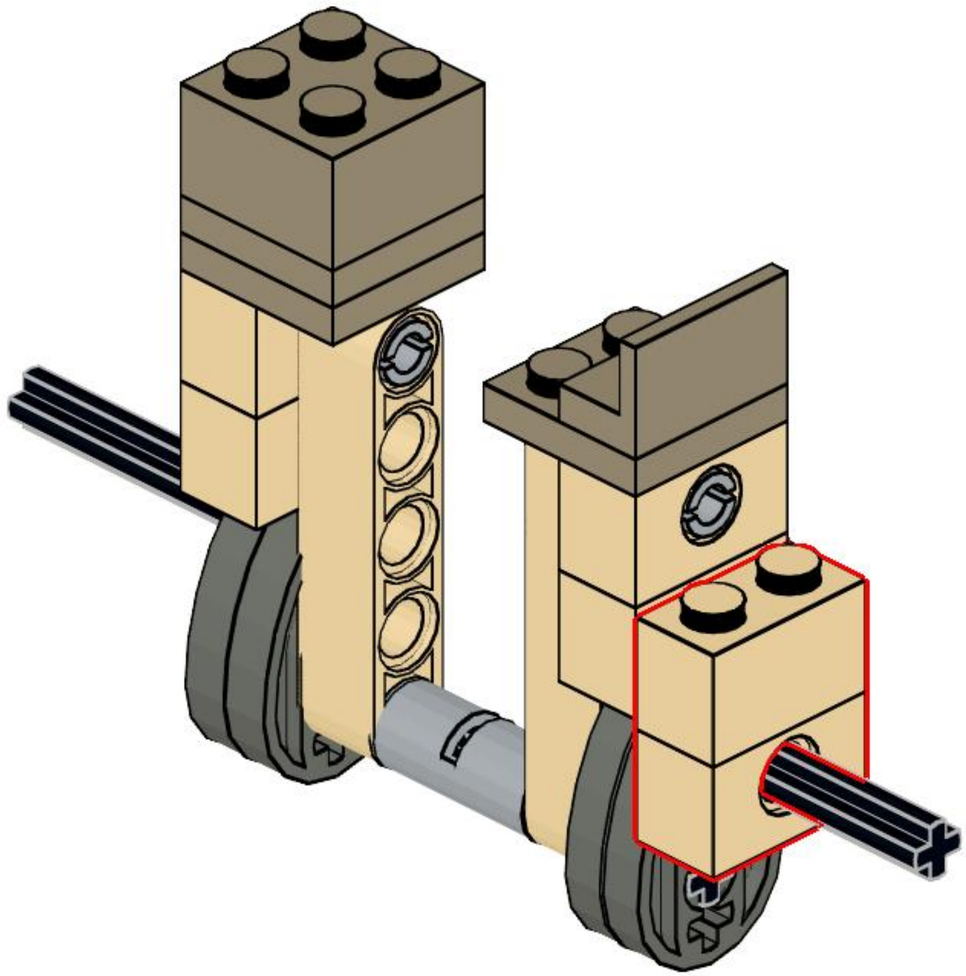

16

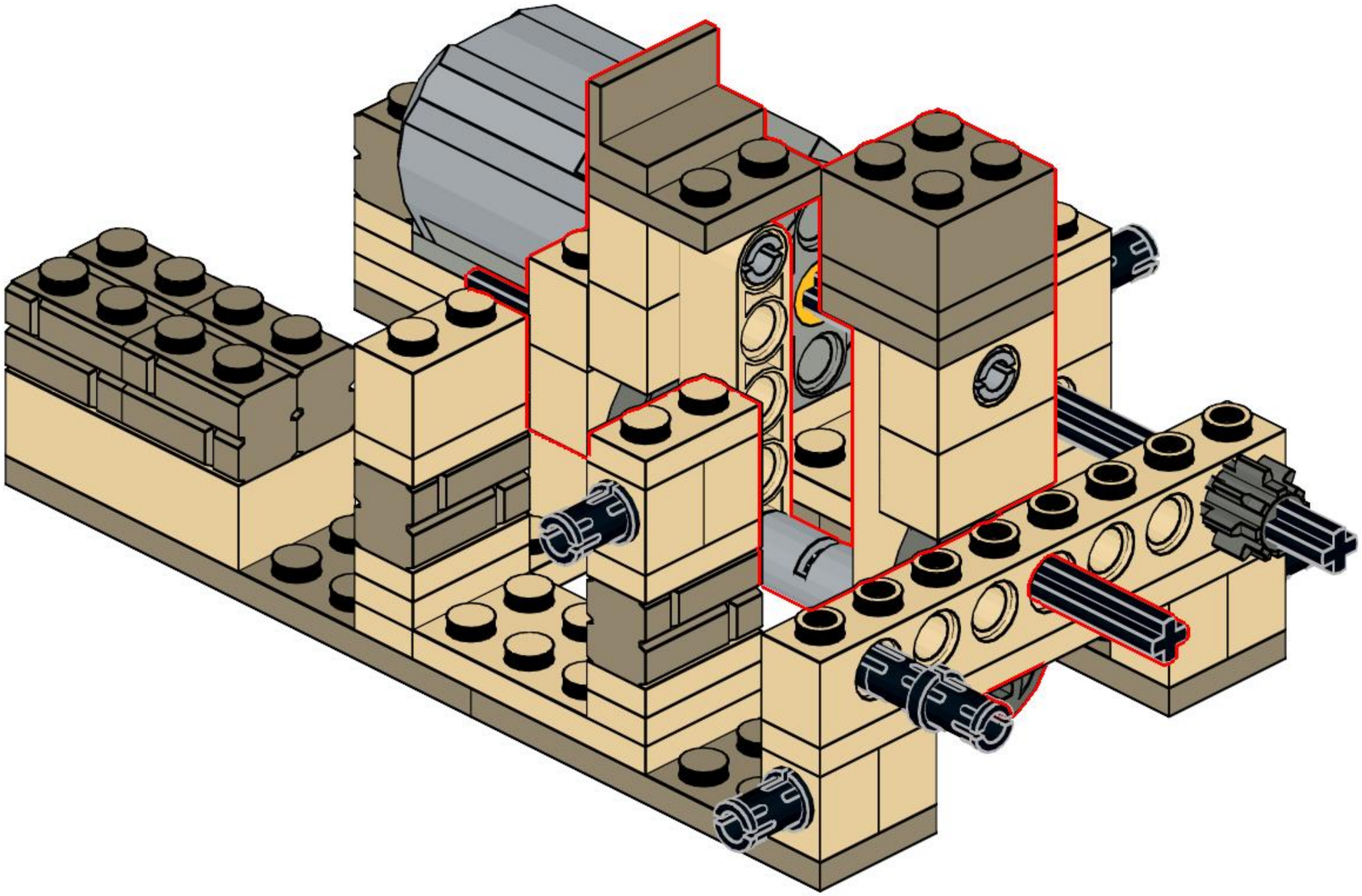

17

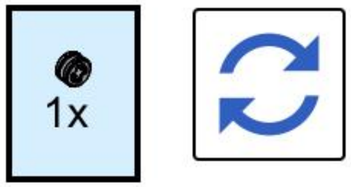

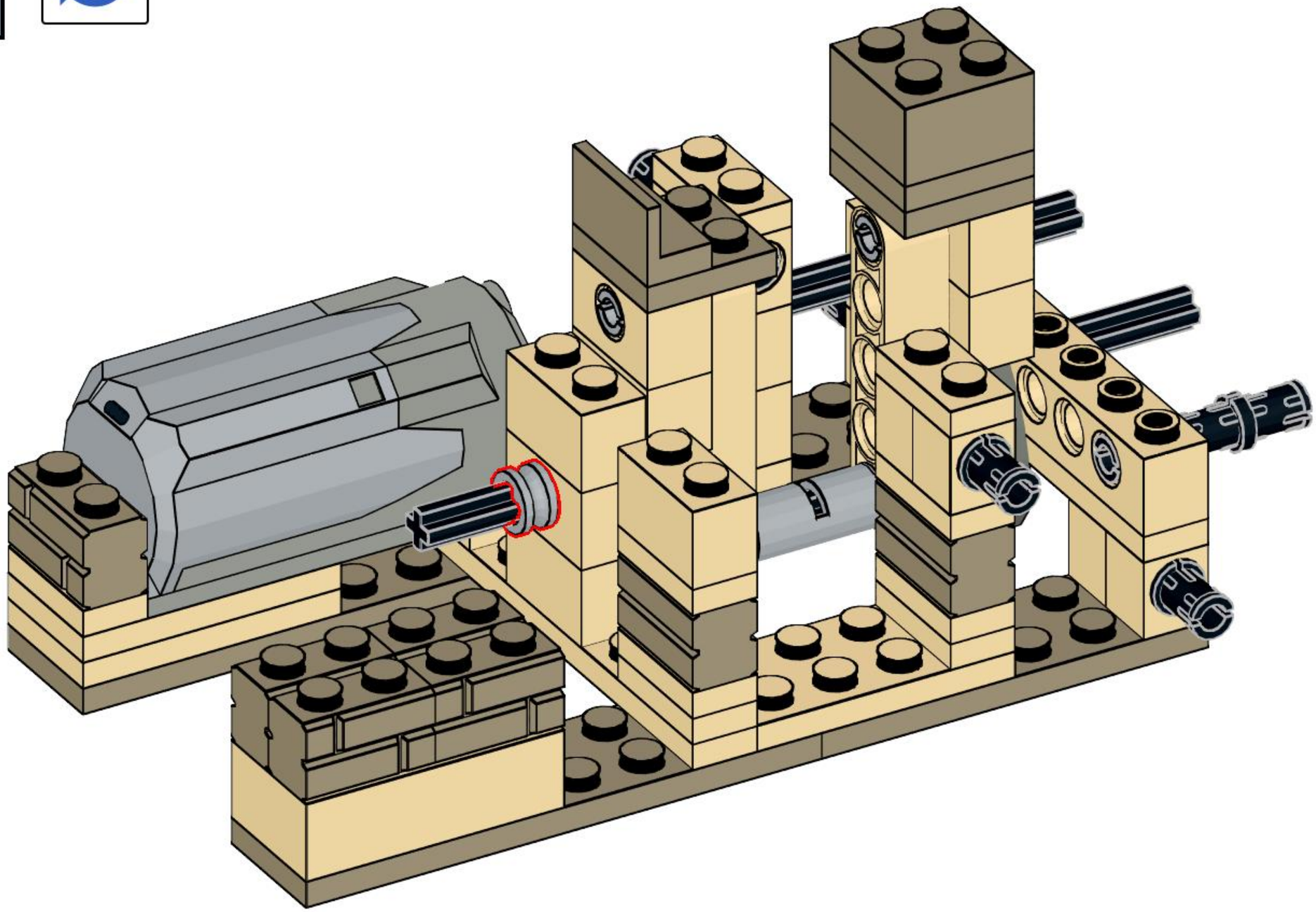

18

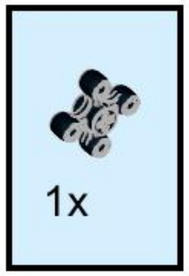

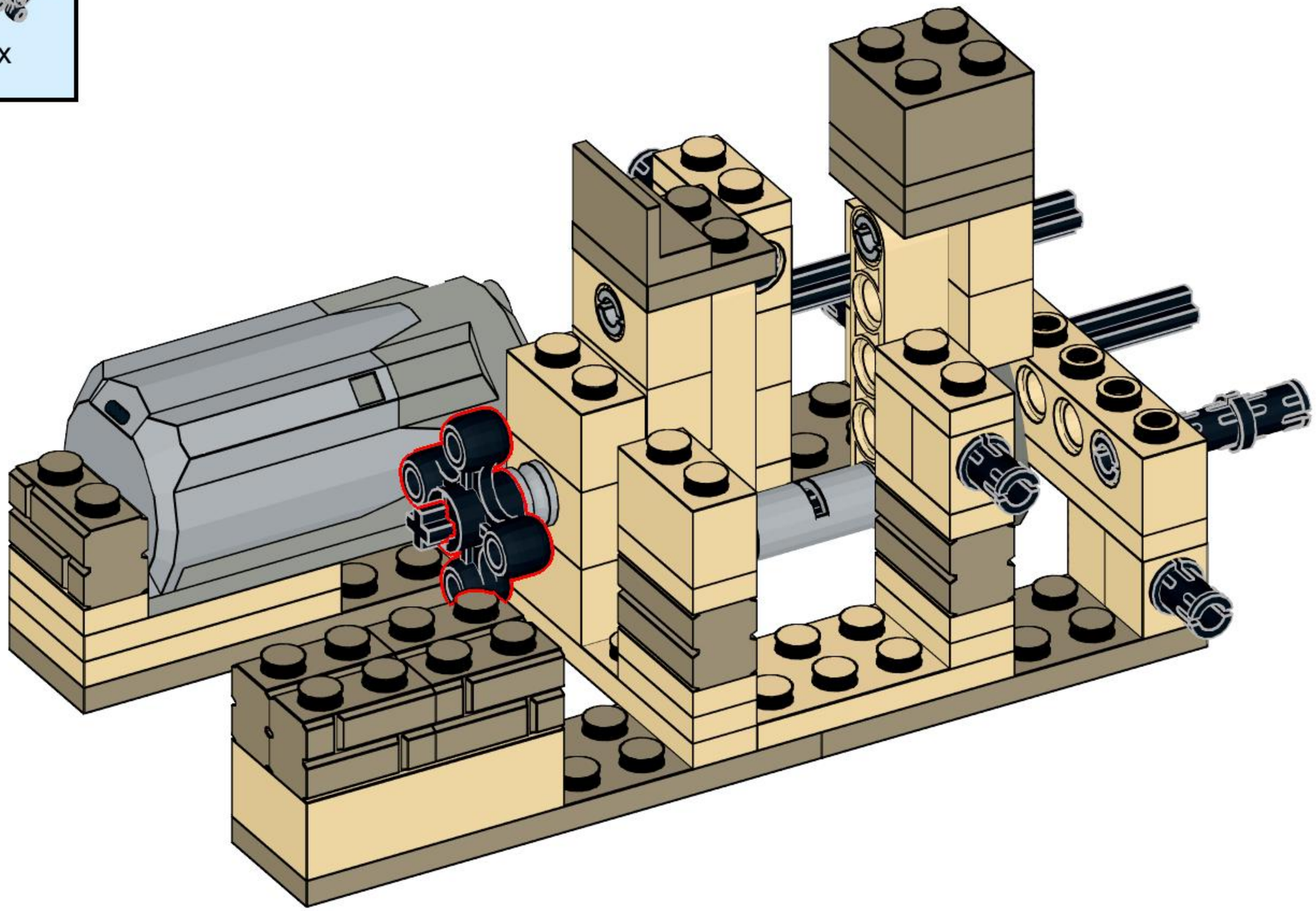

19

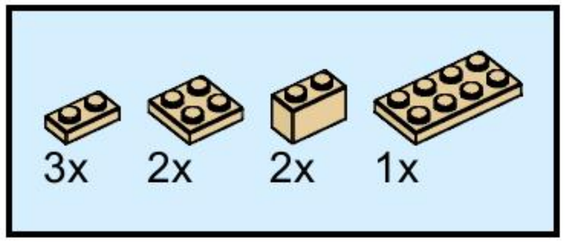

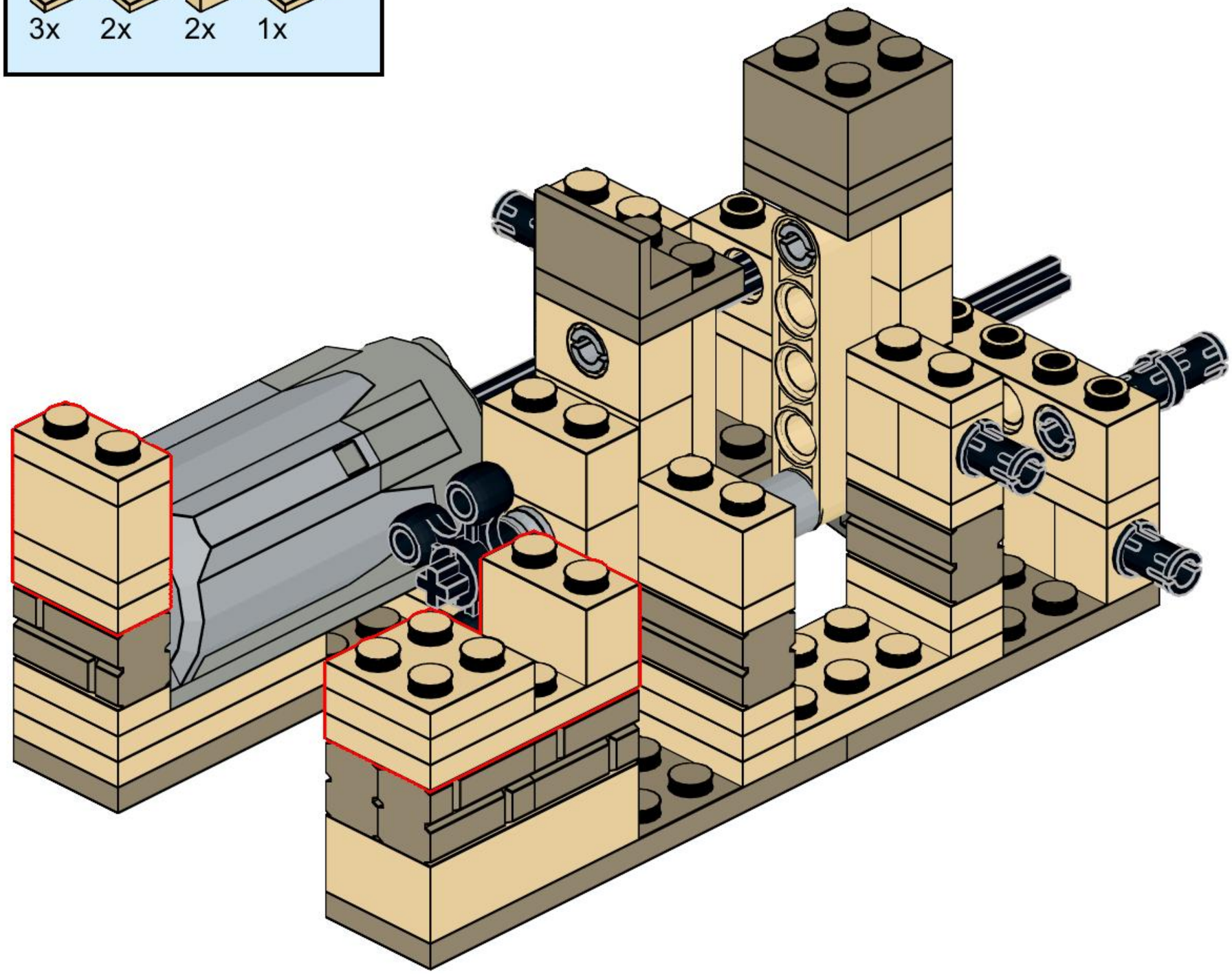

20

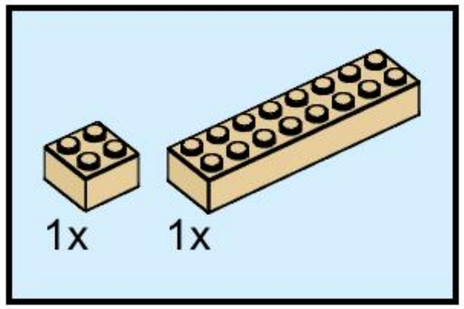

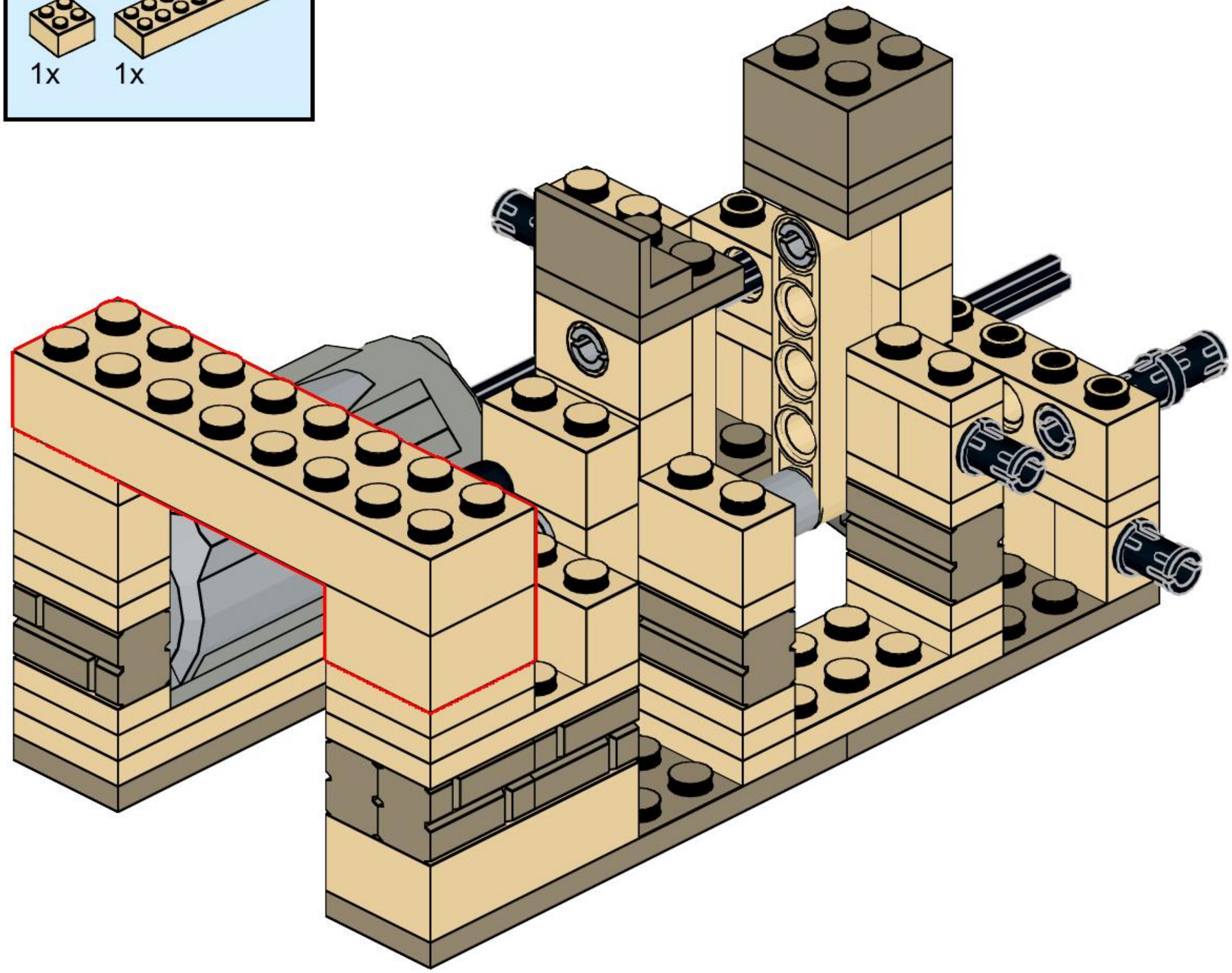

21

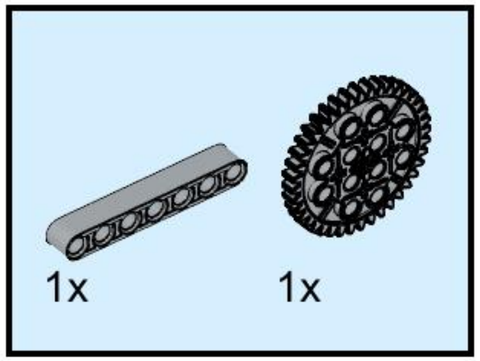

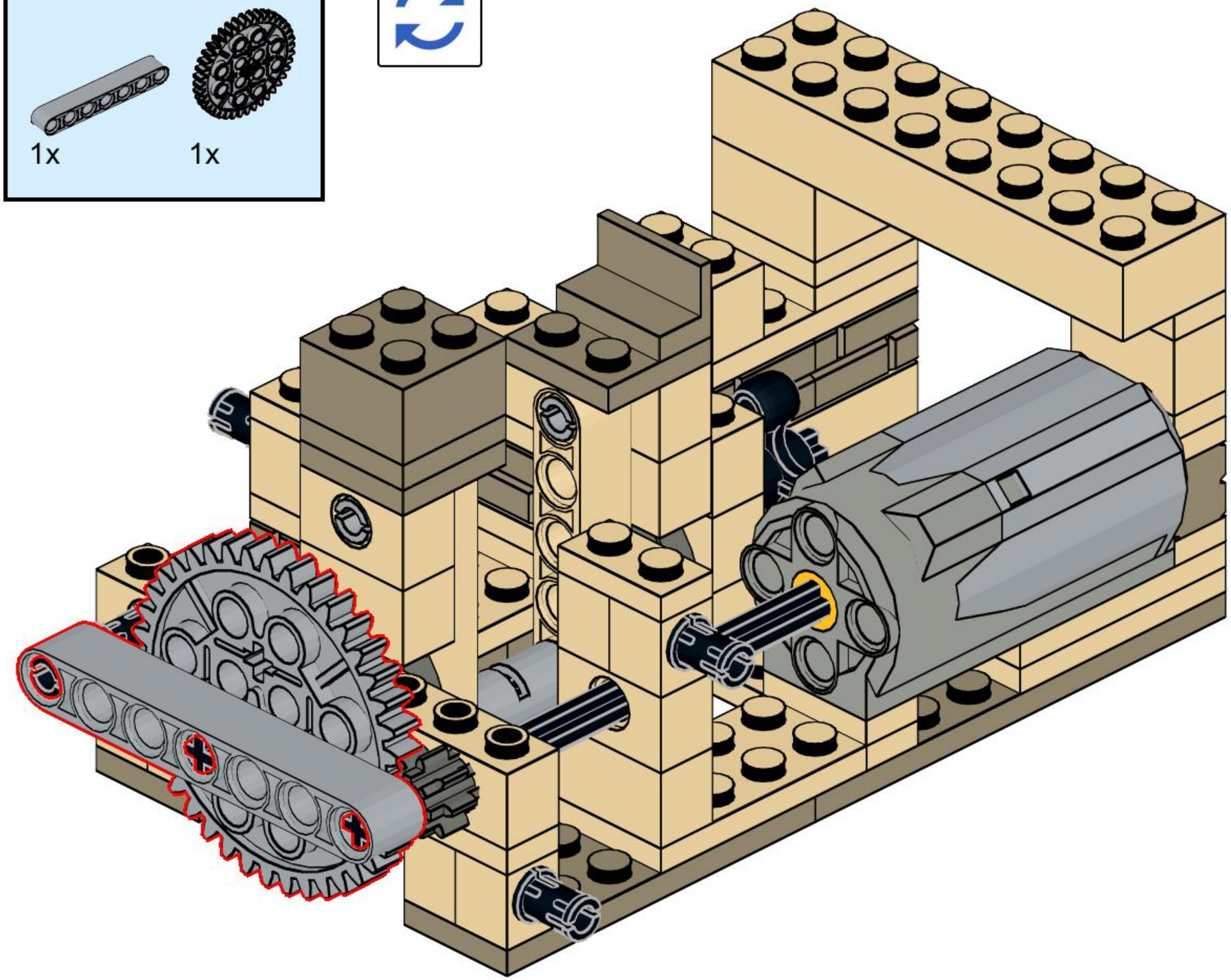

22

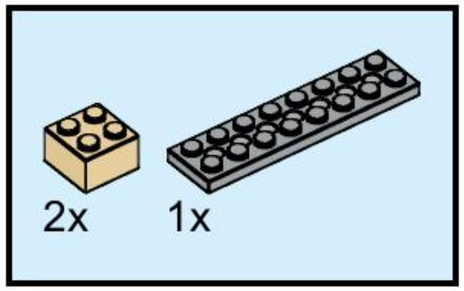

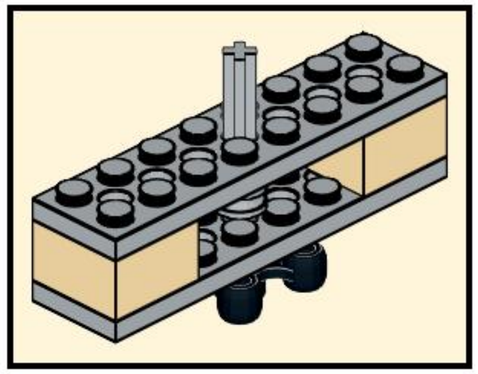

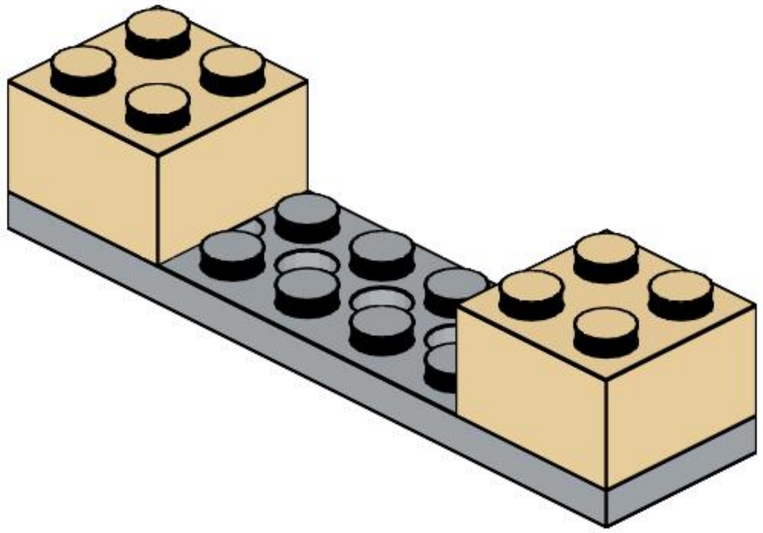

23

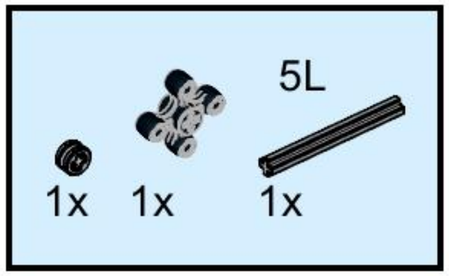

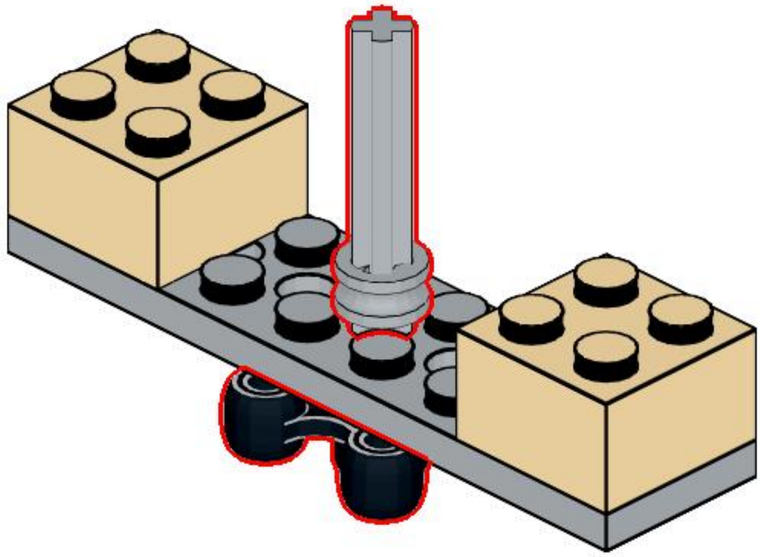

24

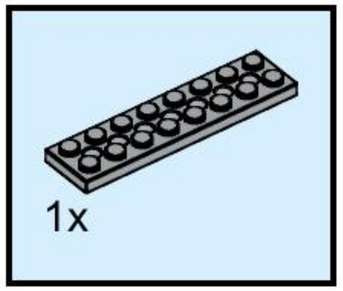

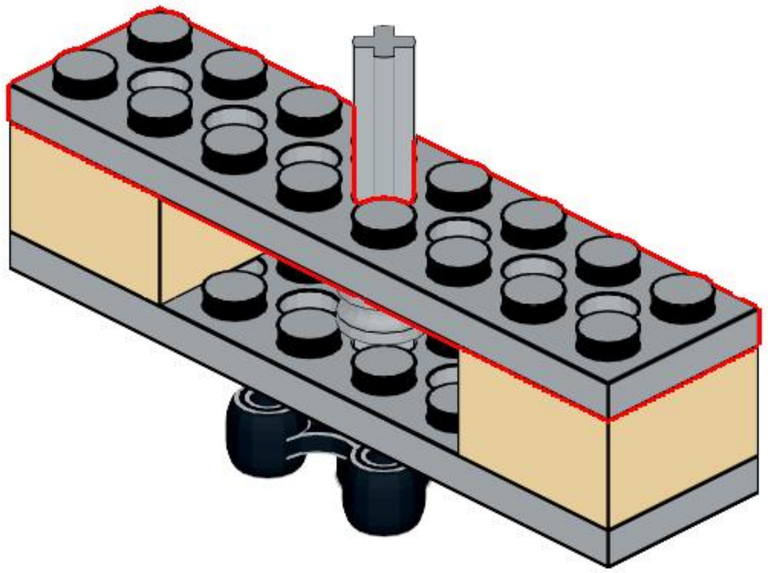

25

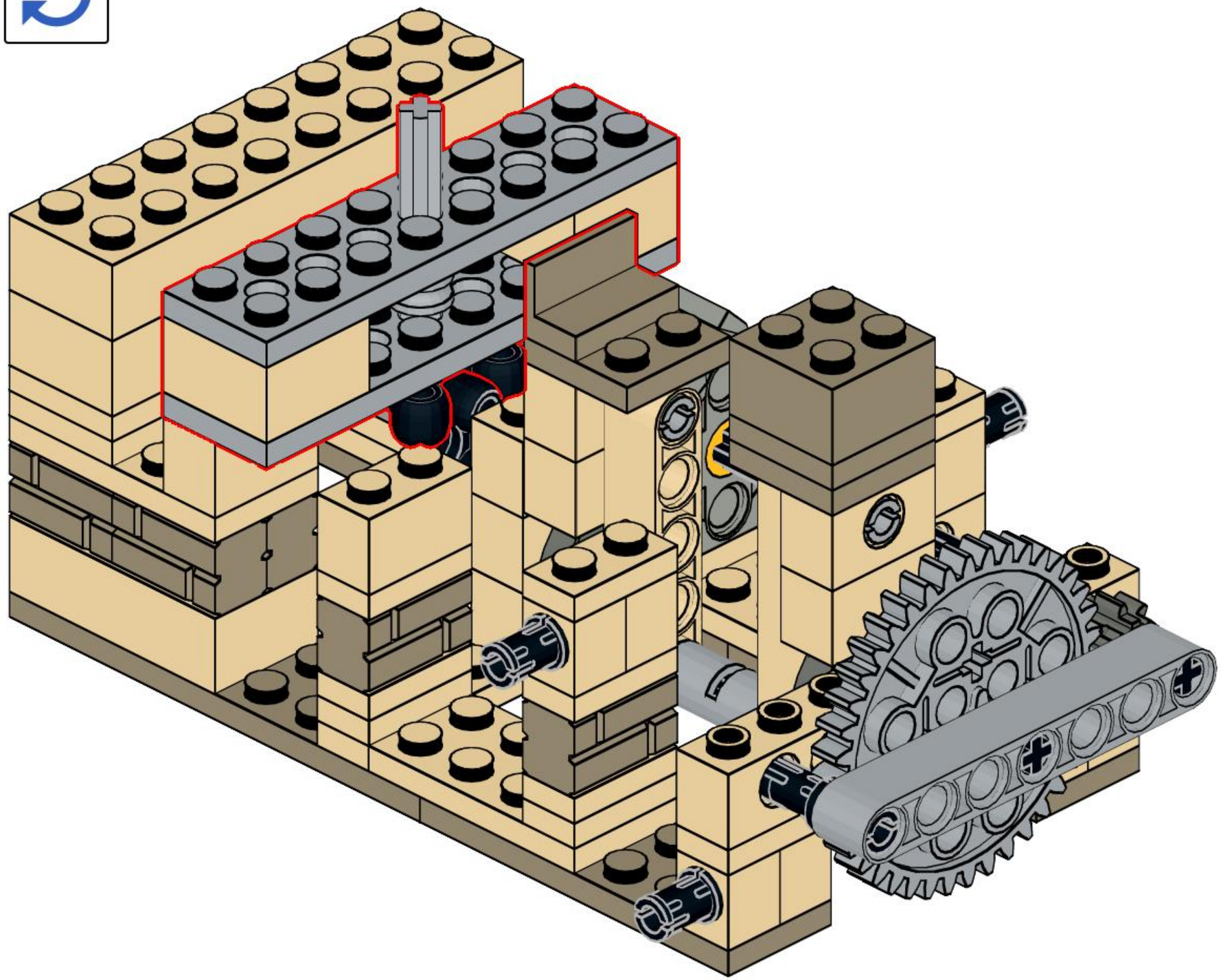

26

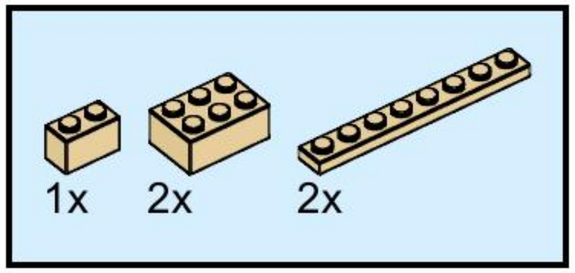

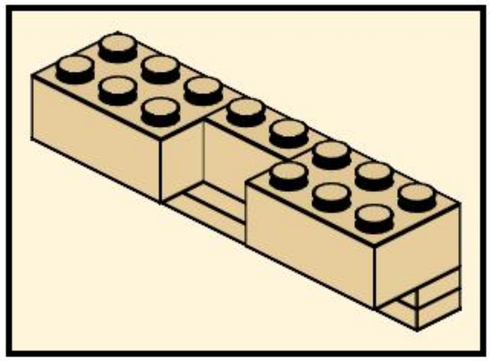

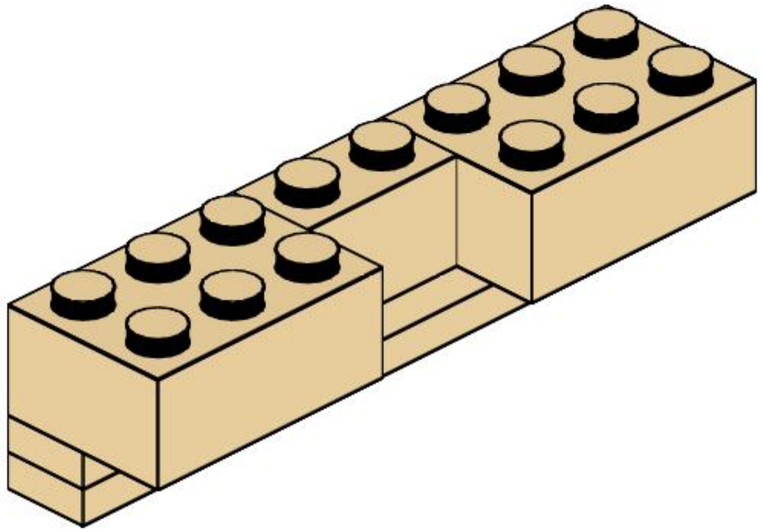

27

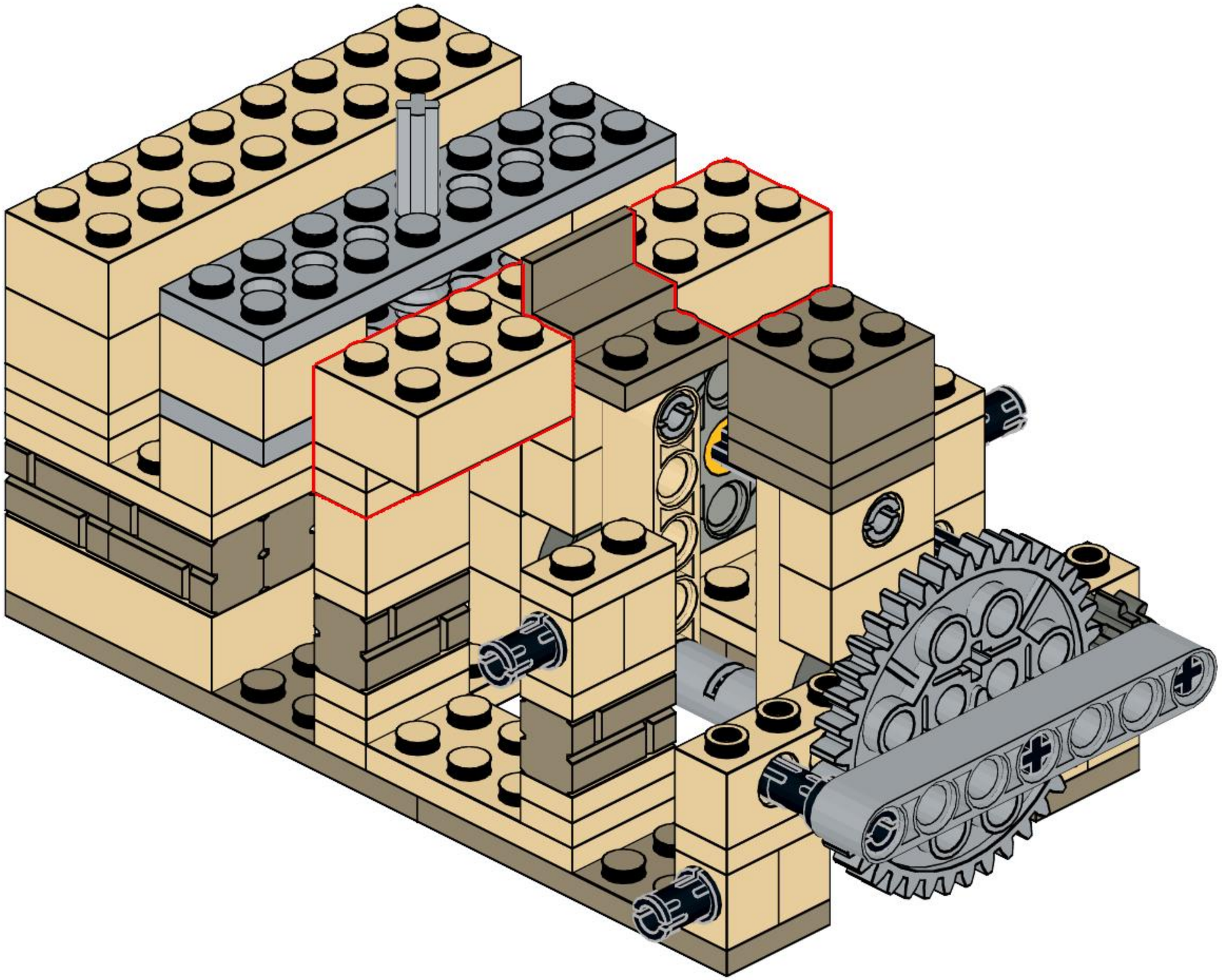

28

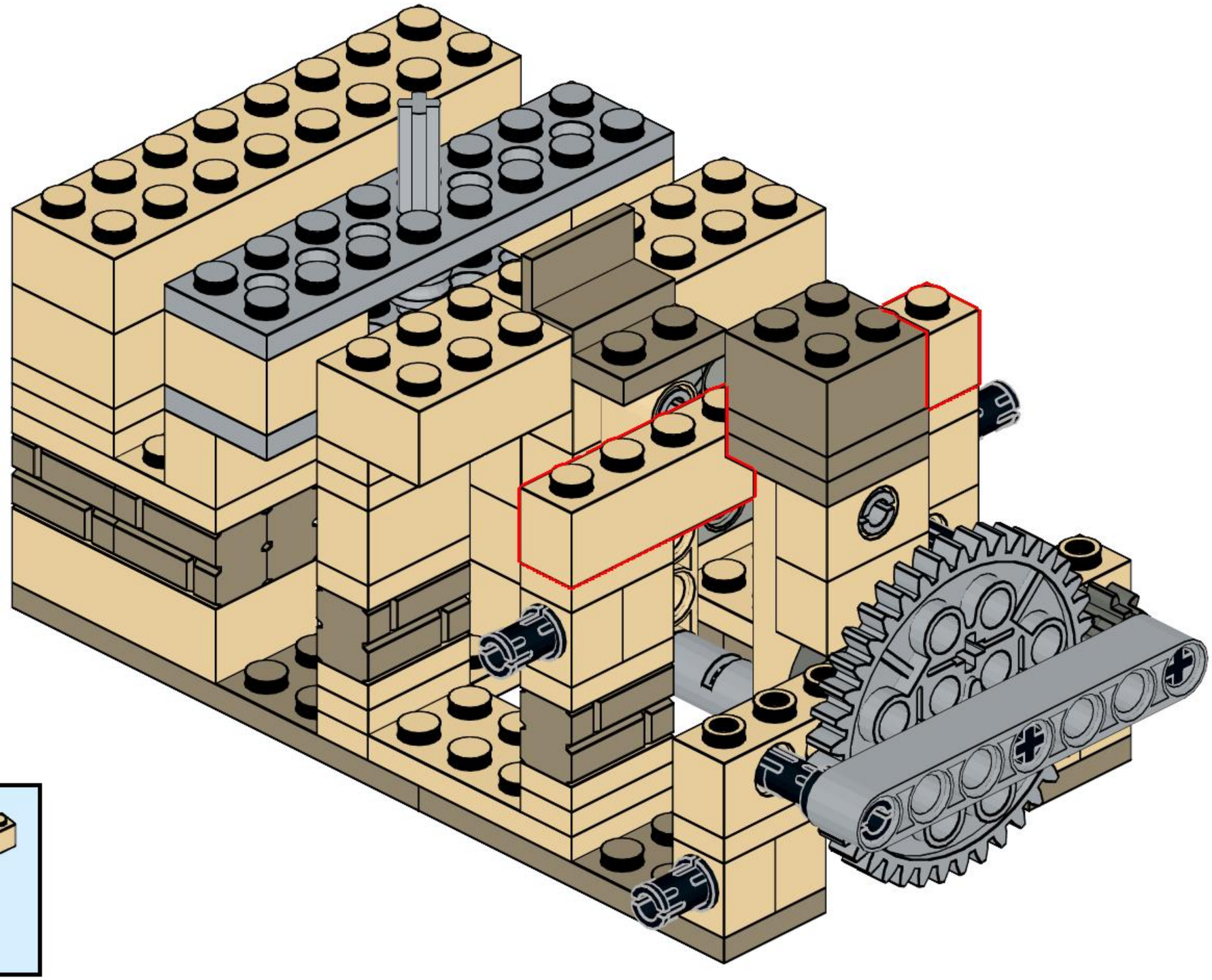

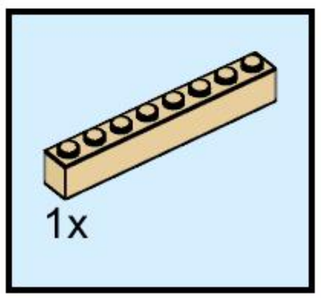

29

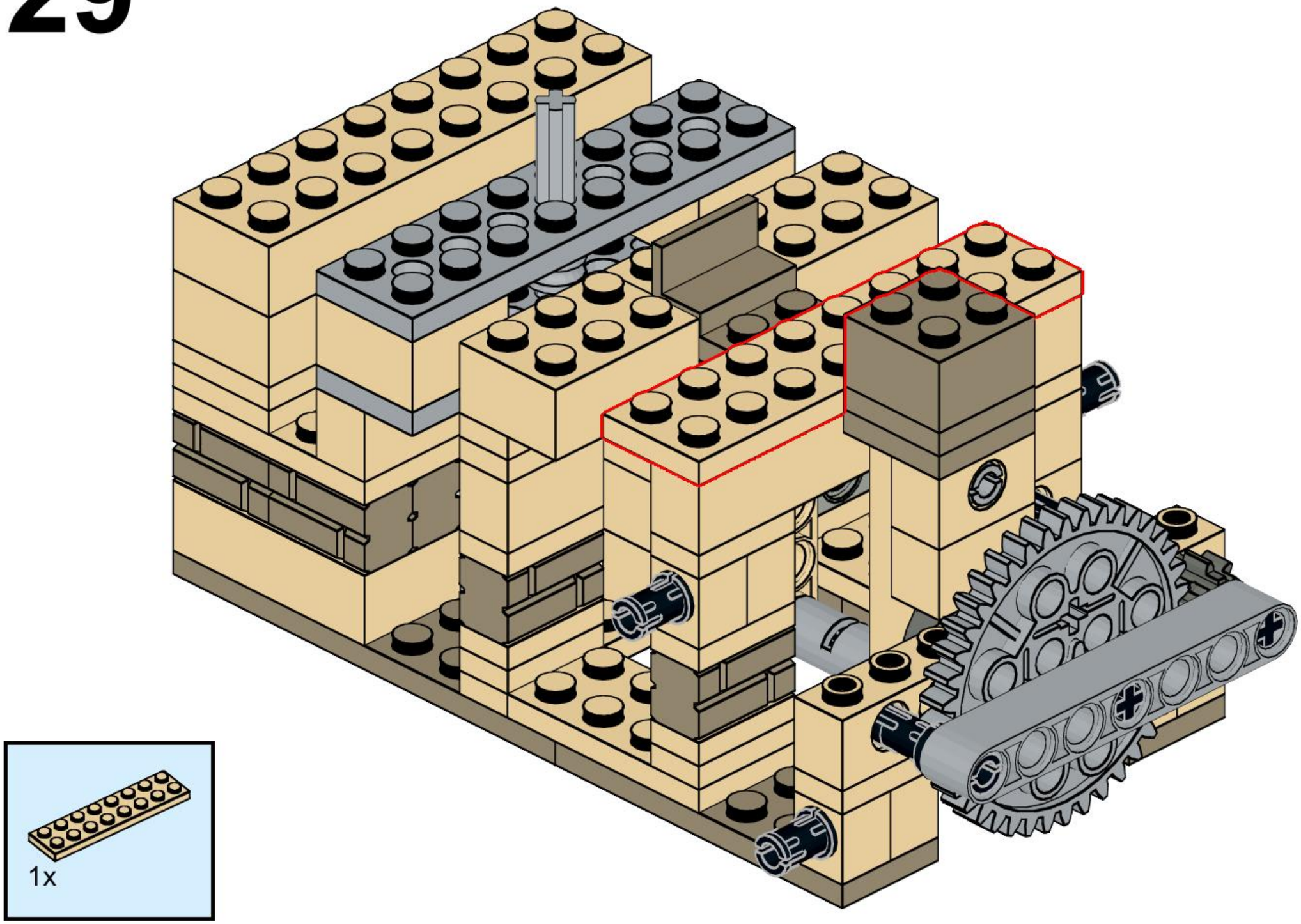

30

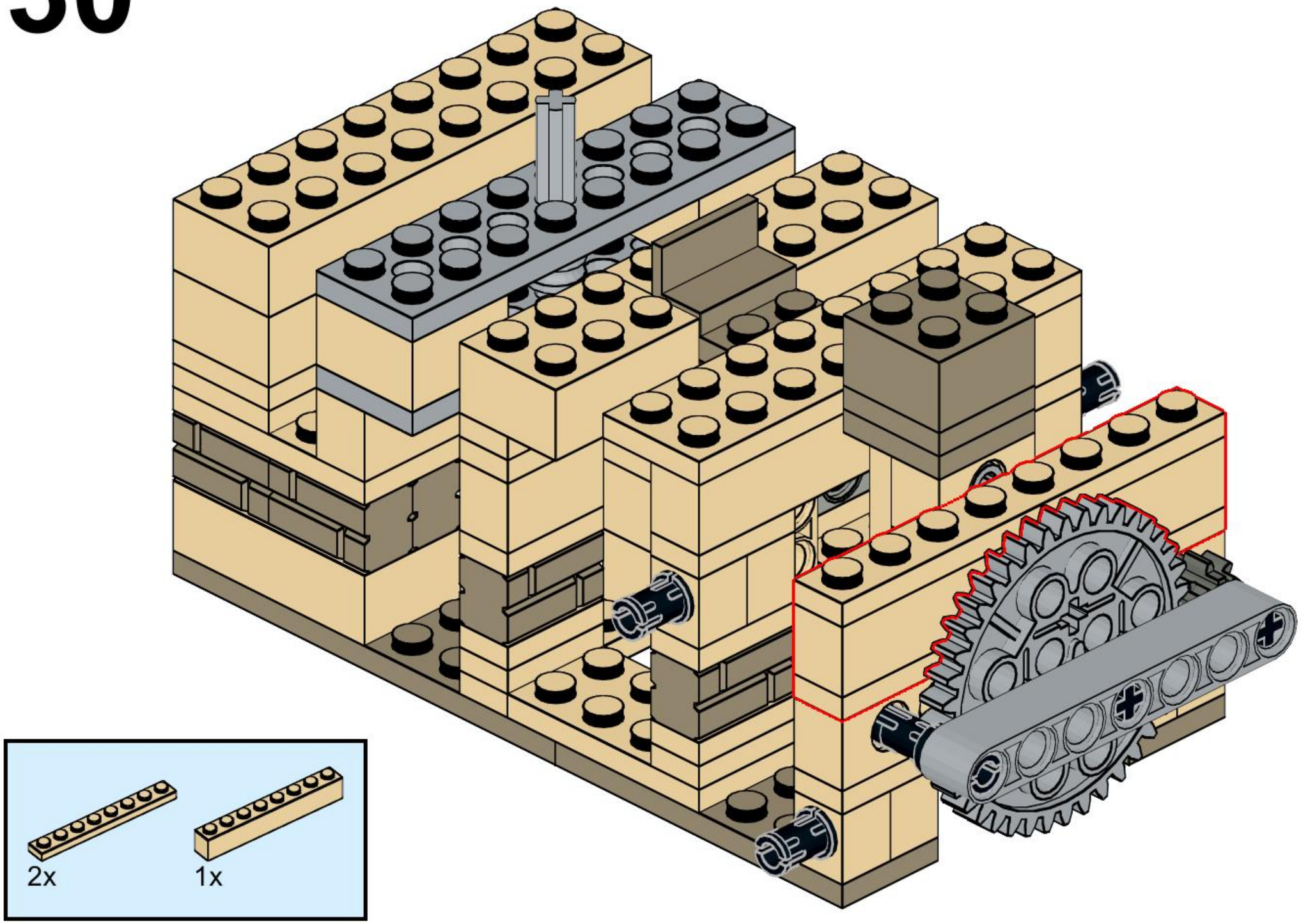

31

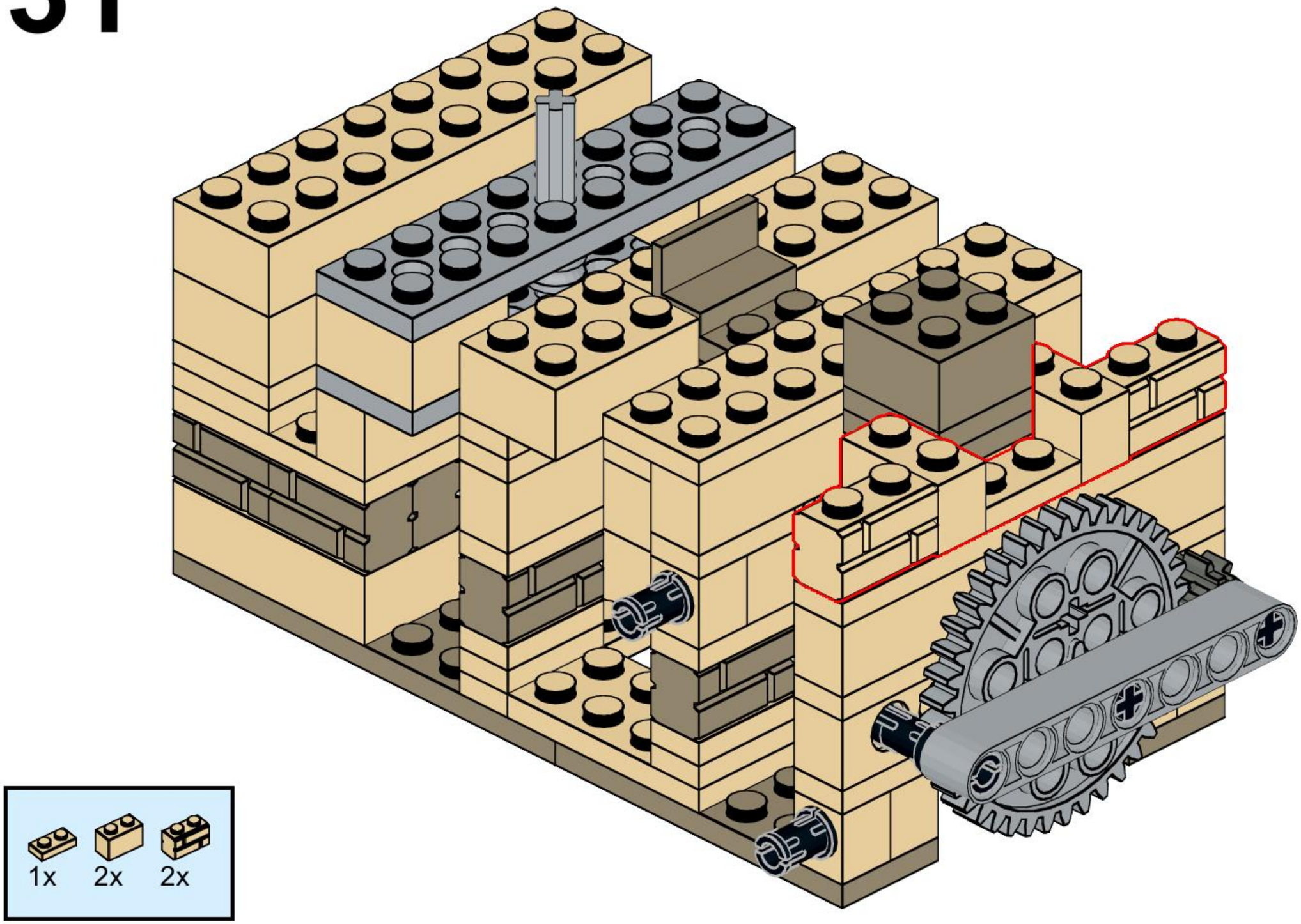

32

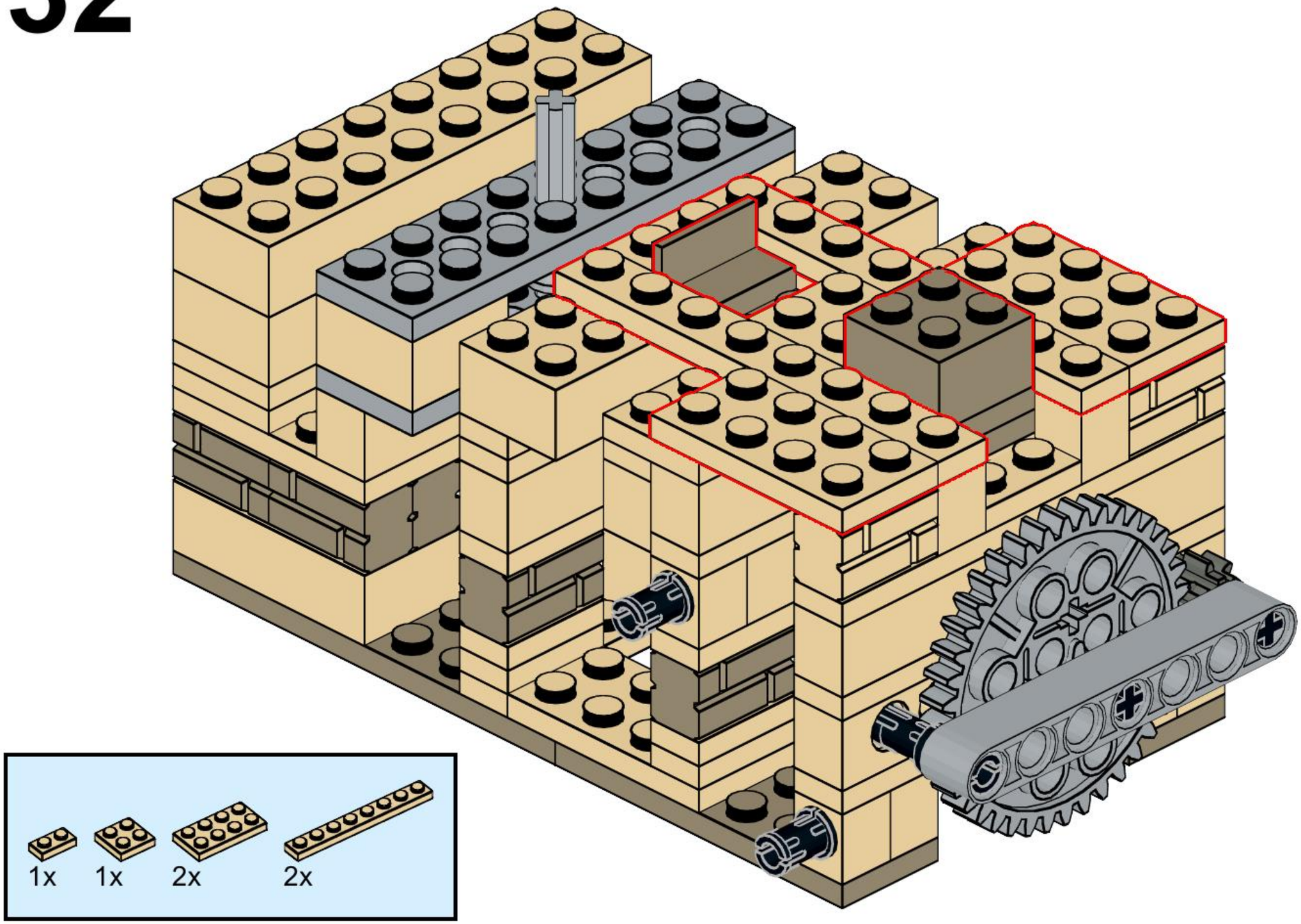

33

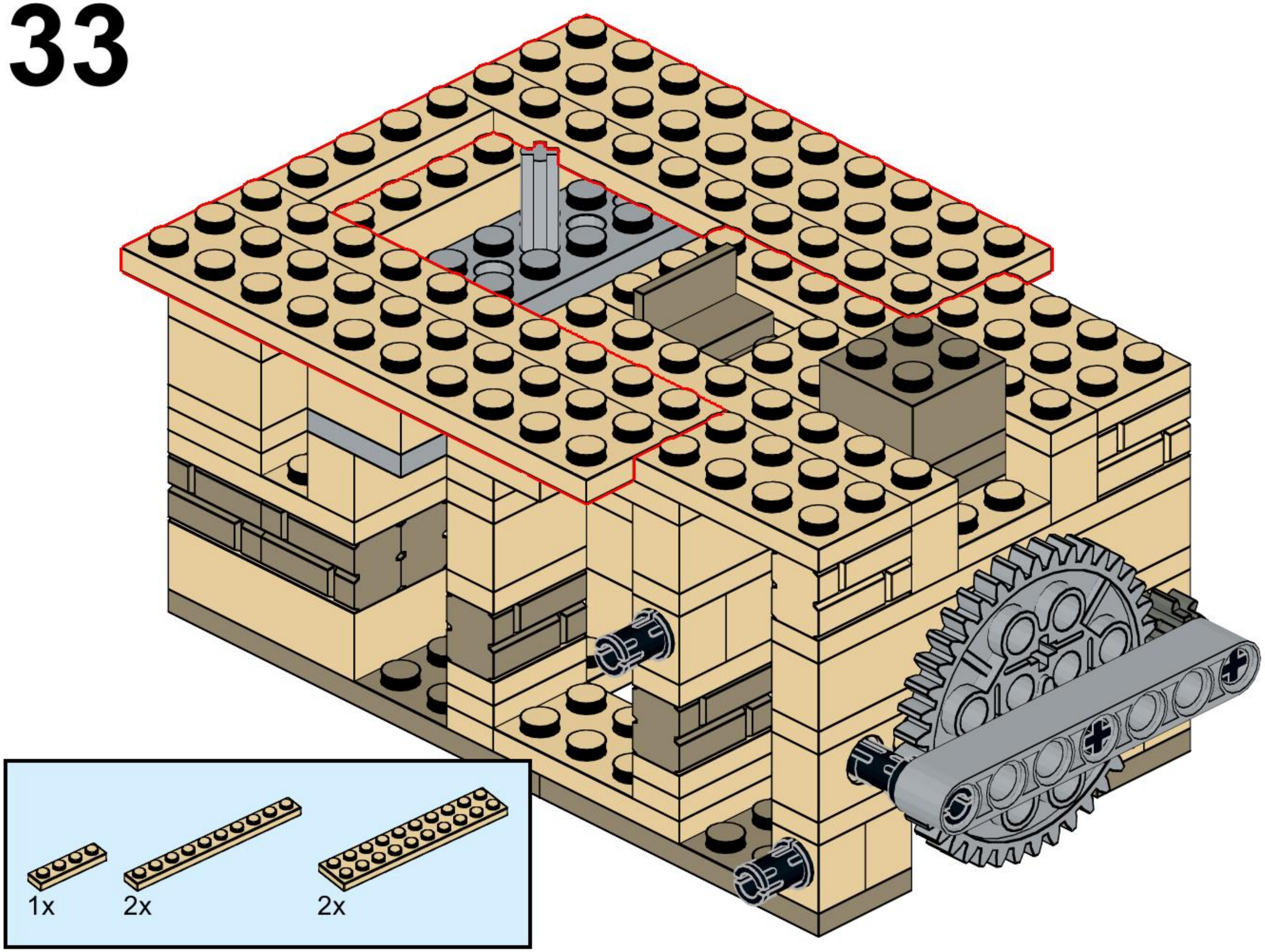

34

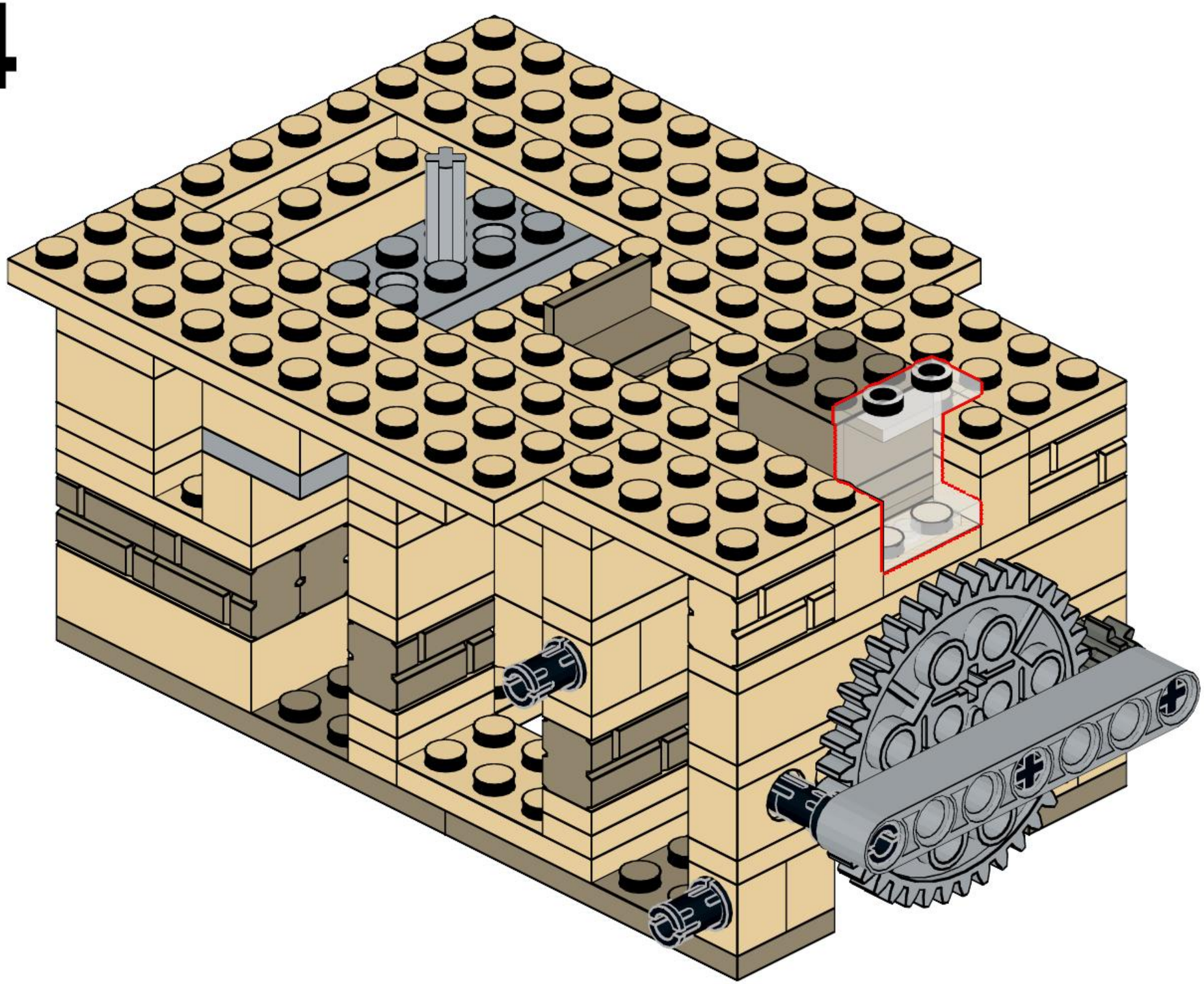

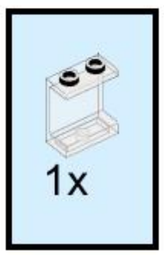

35

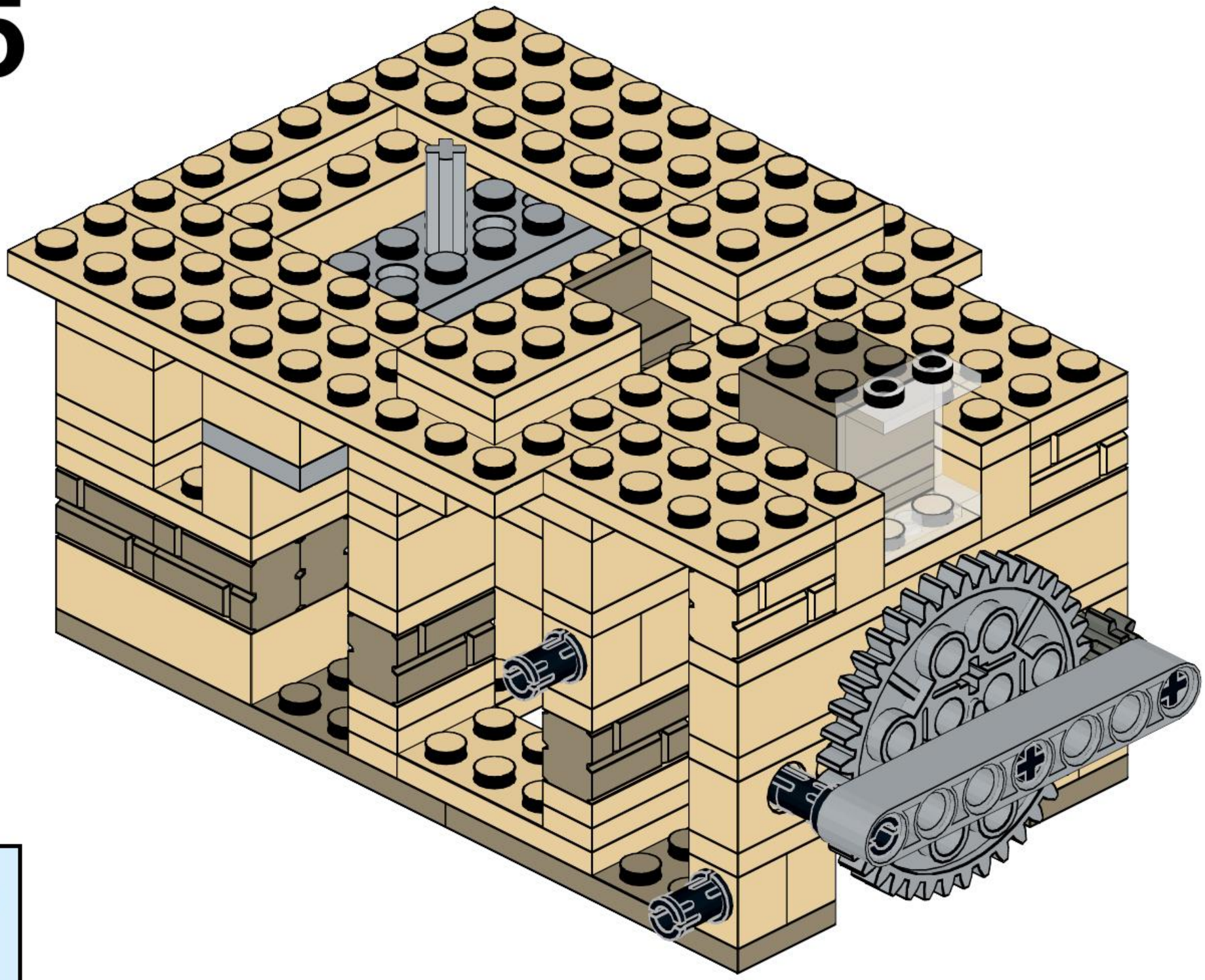

36

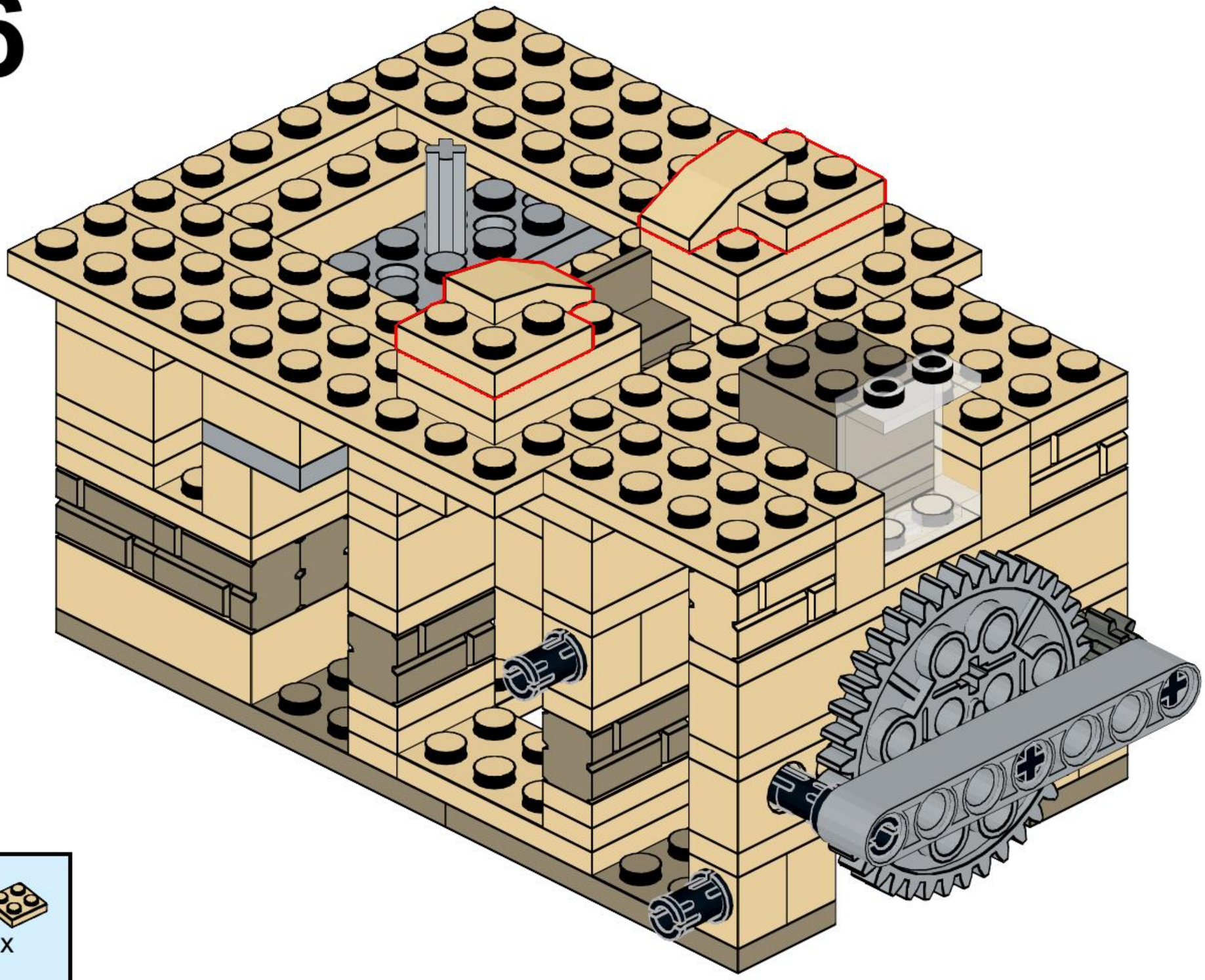

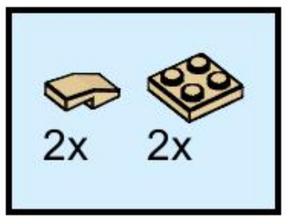

37

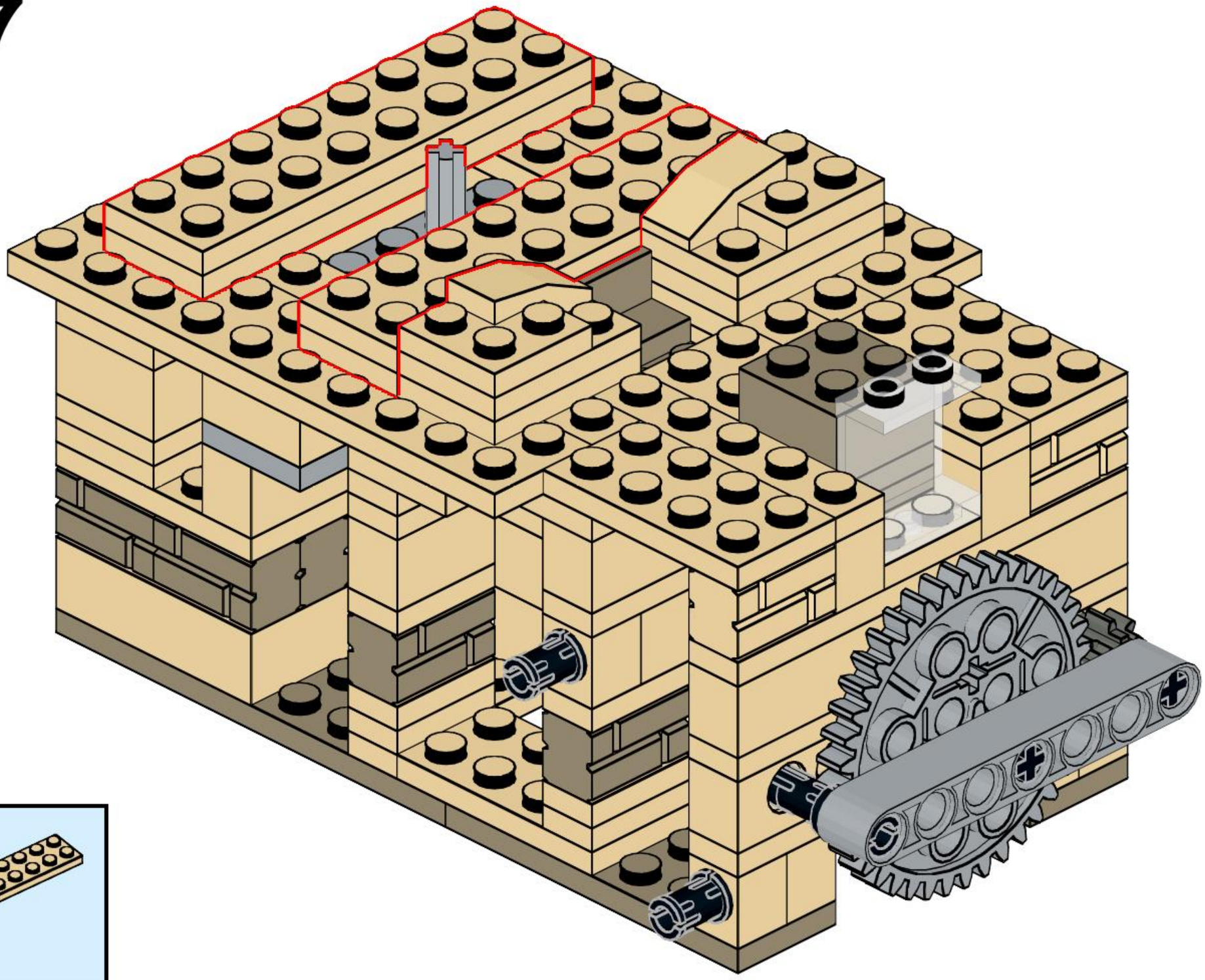

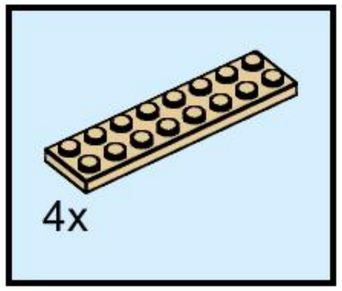

38

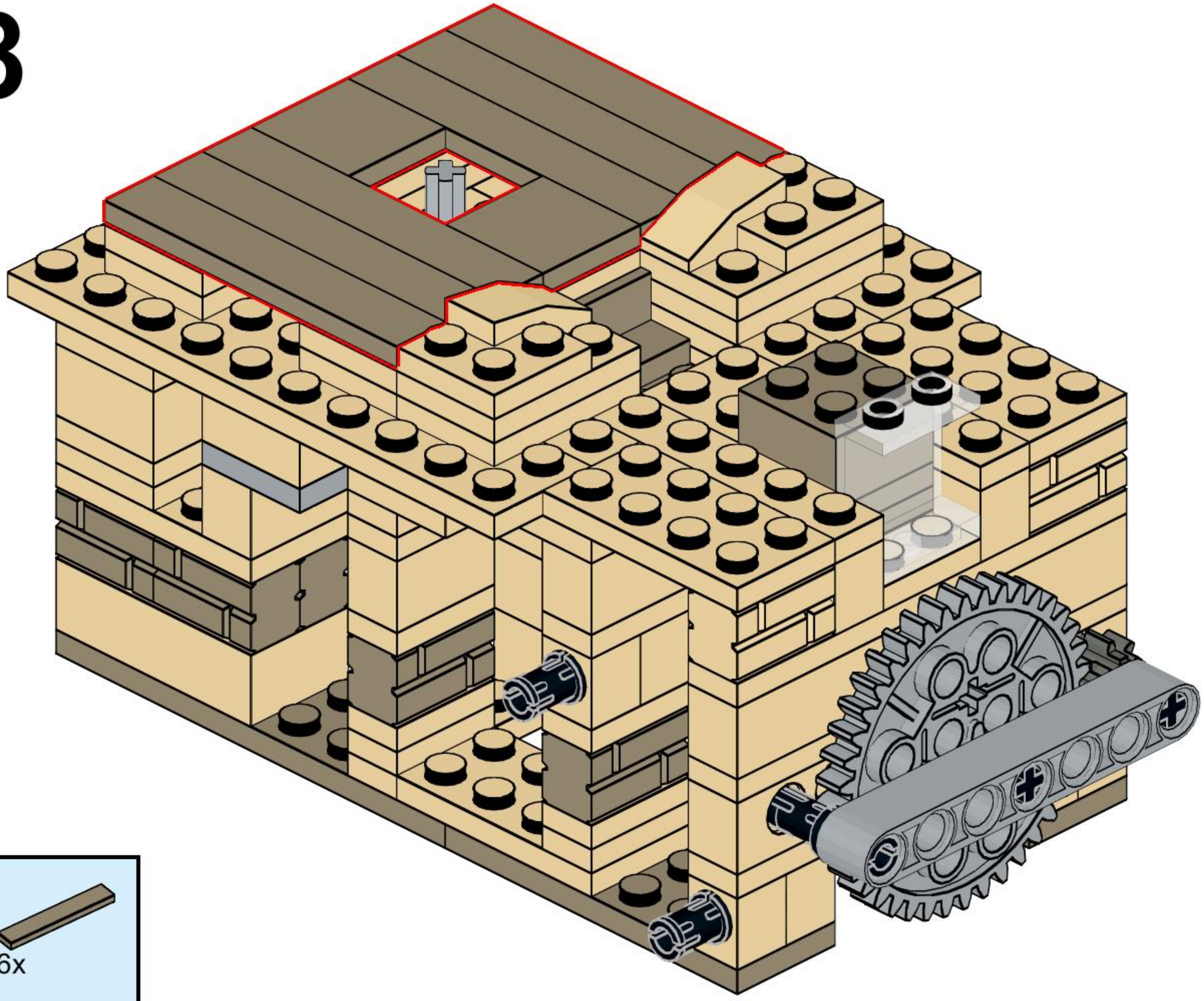

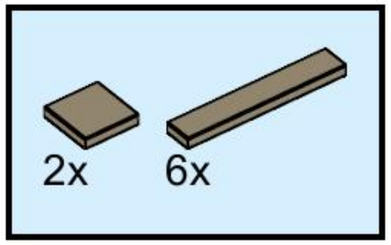

39

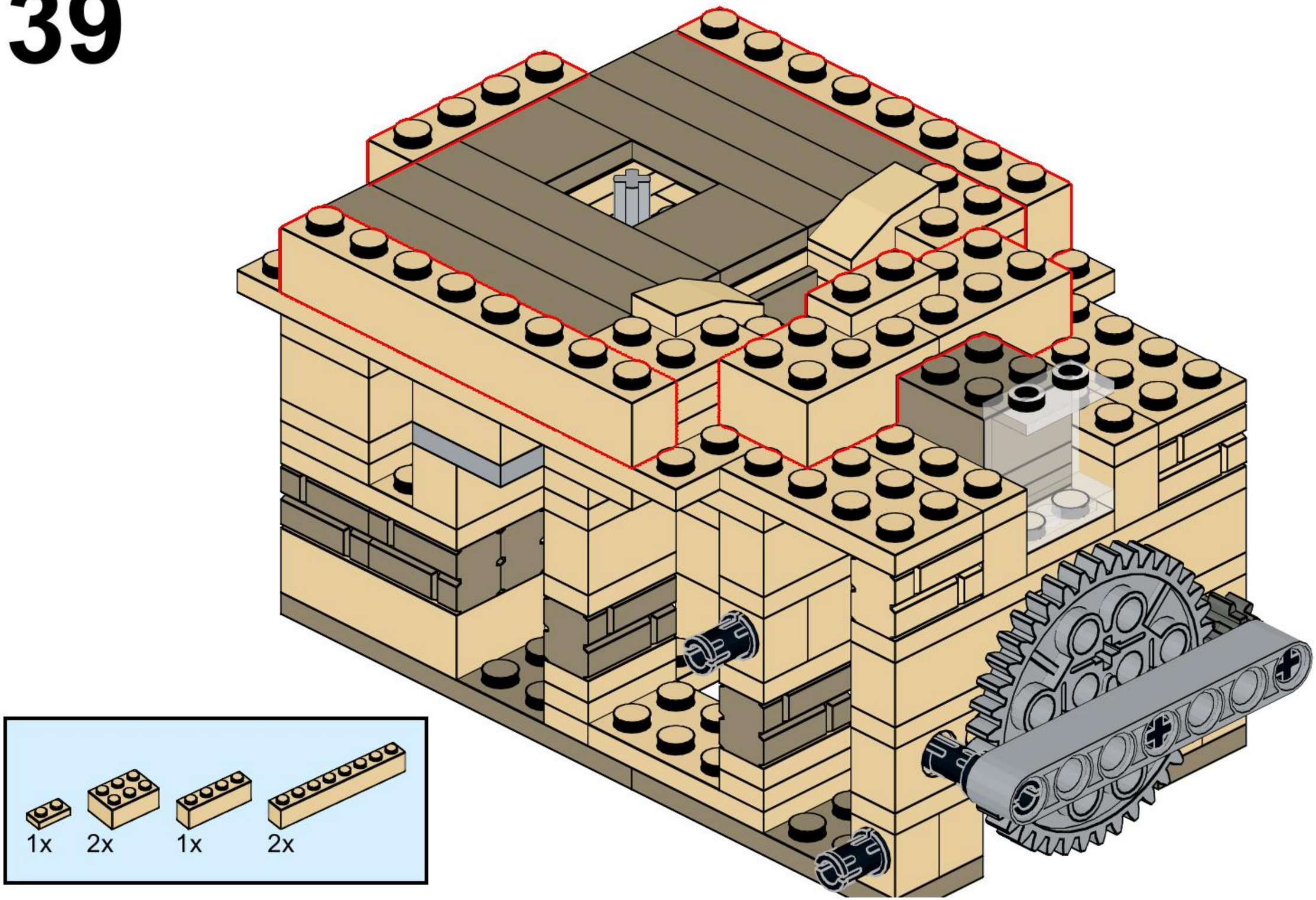

40

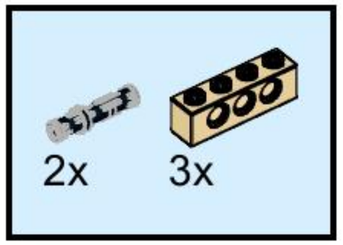

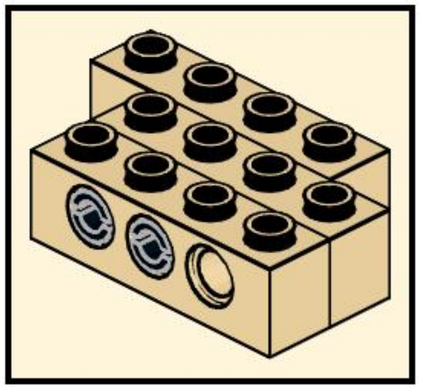

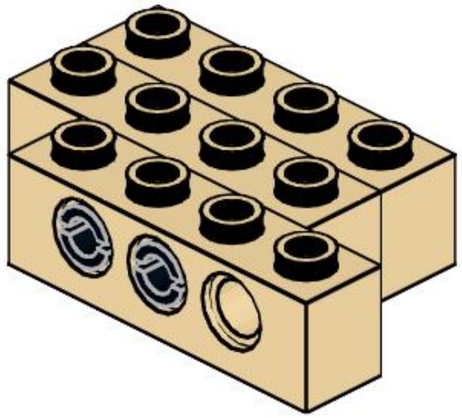

41

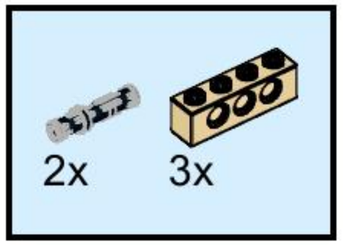

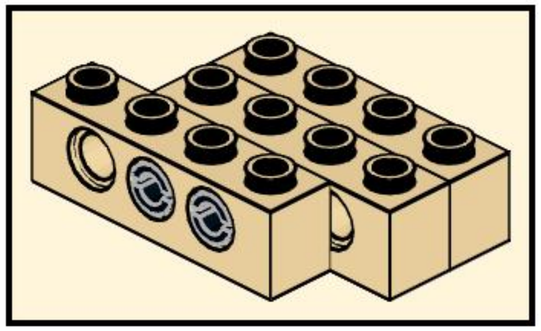

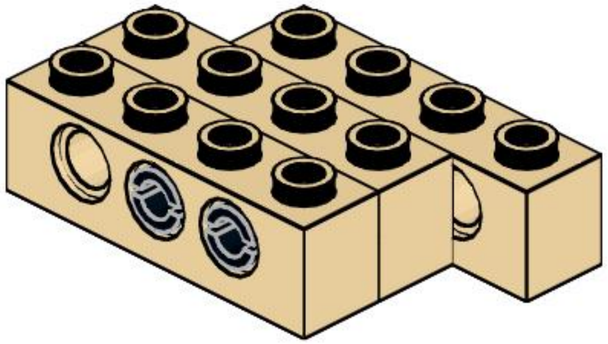

42

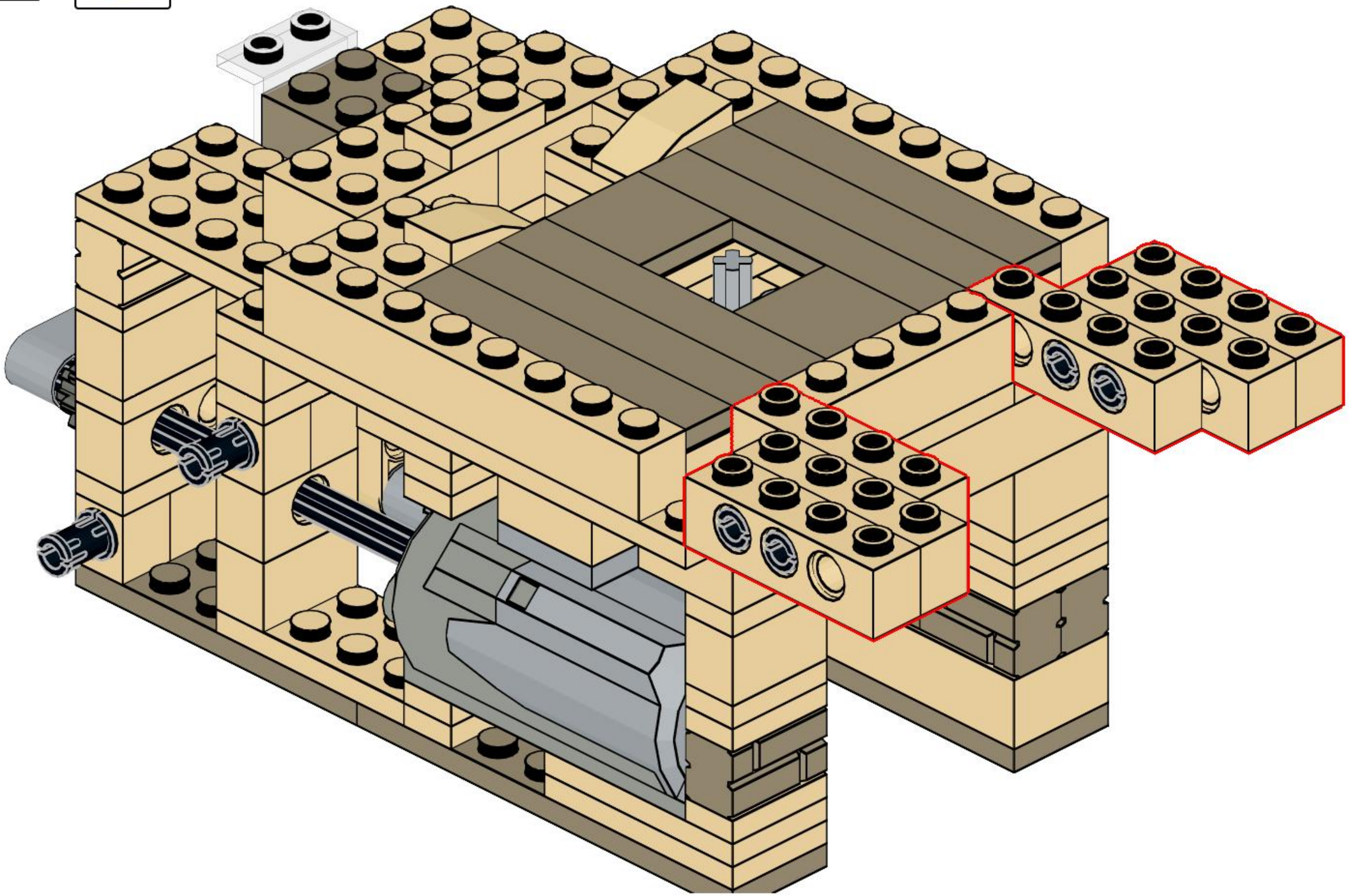

43

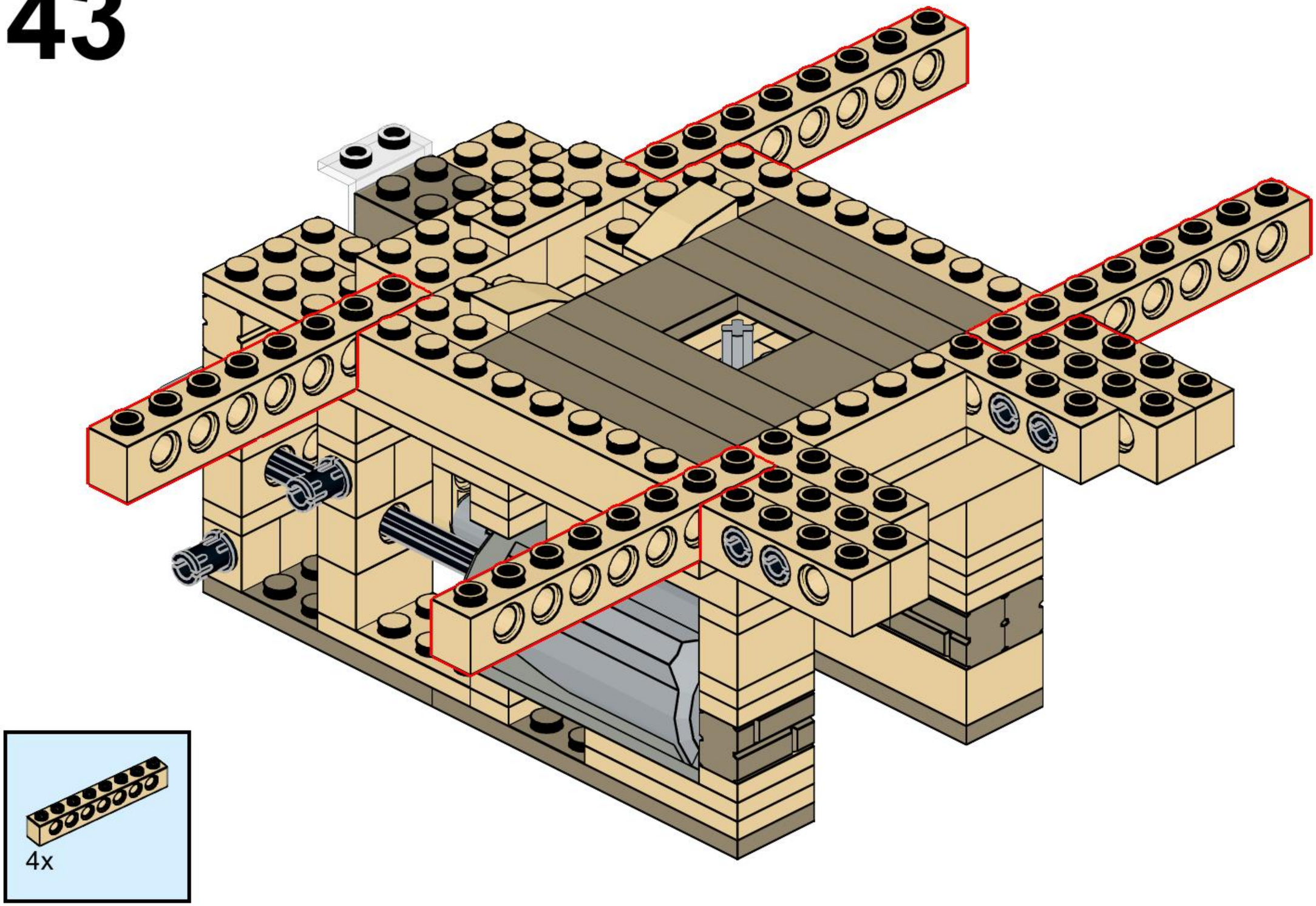

44

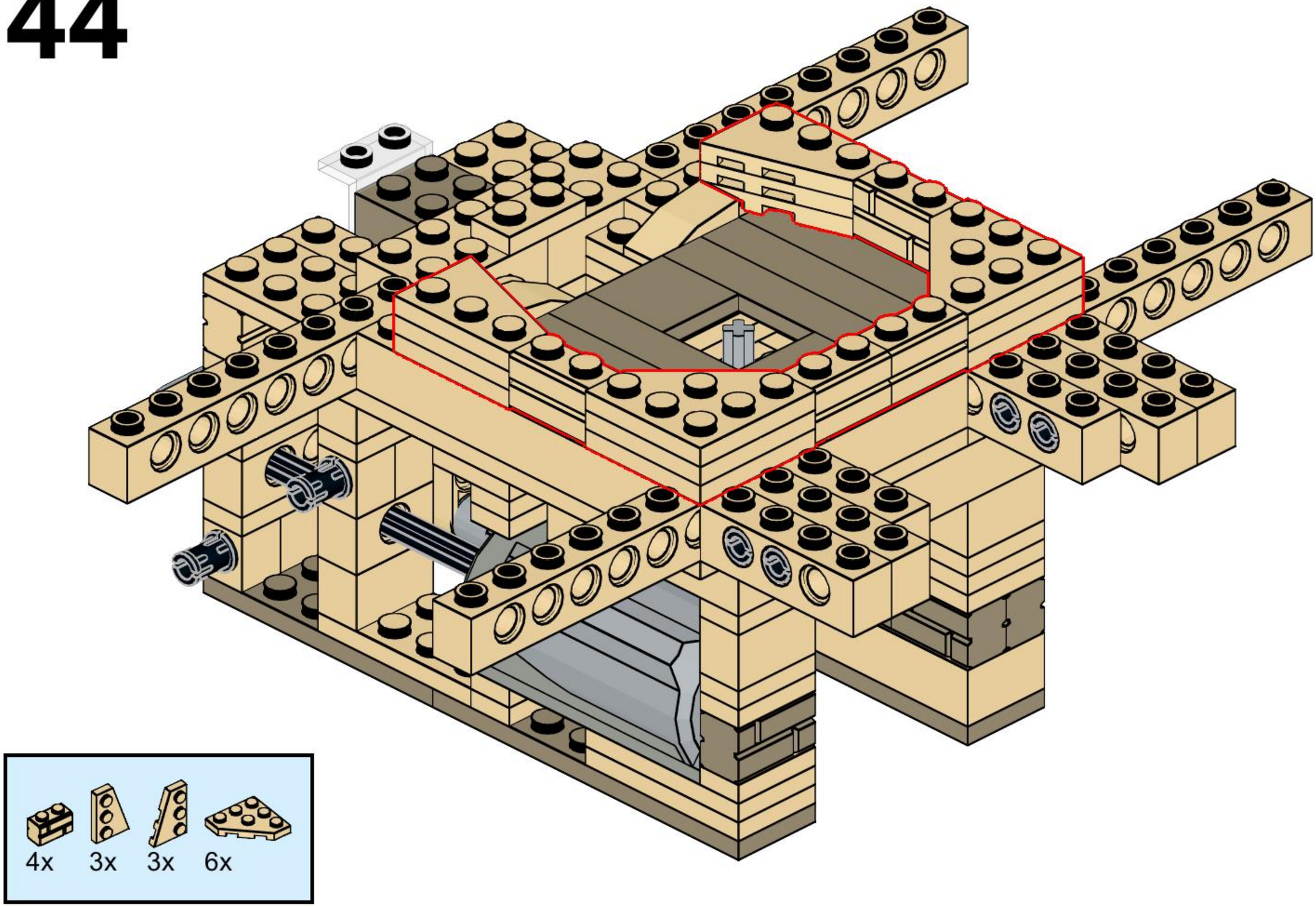

45

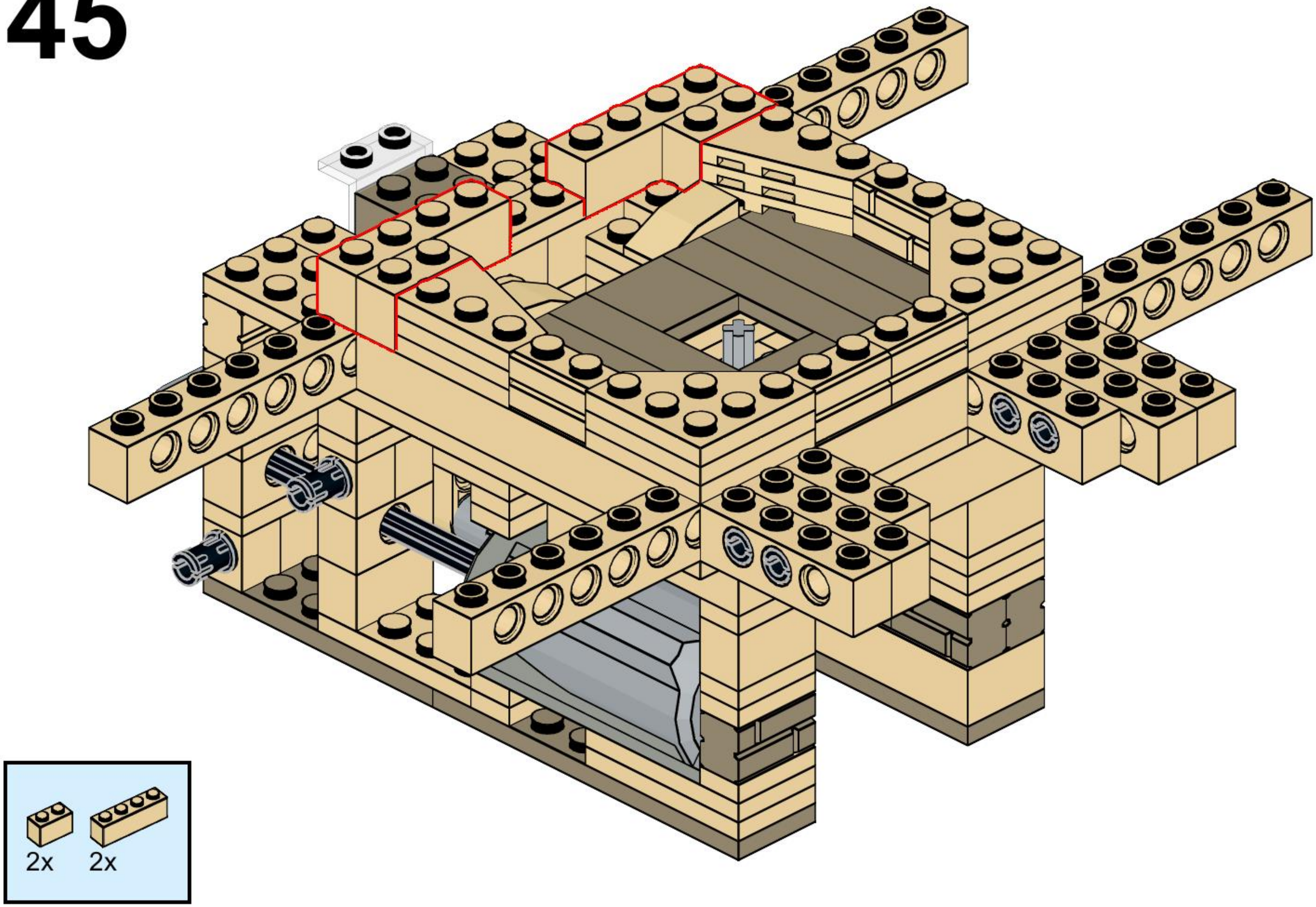

46

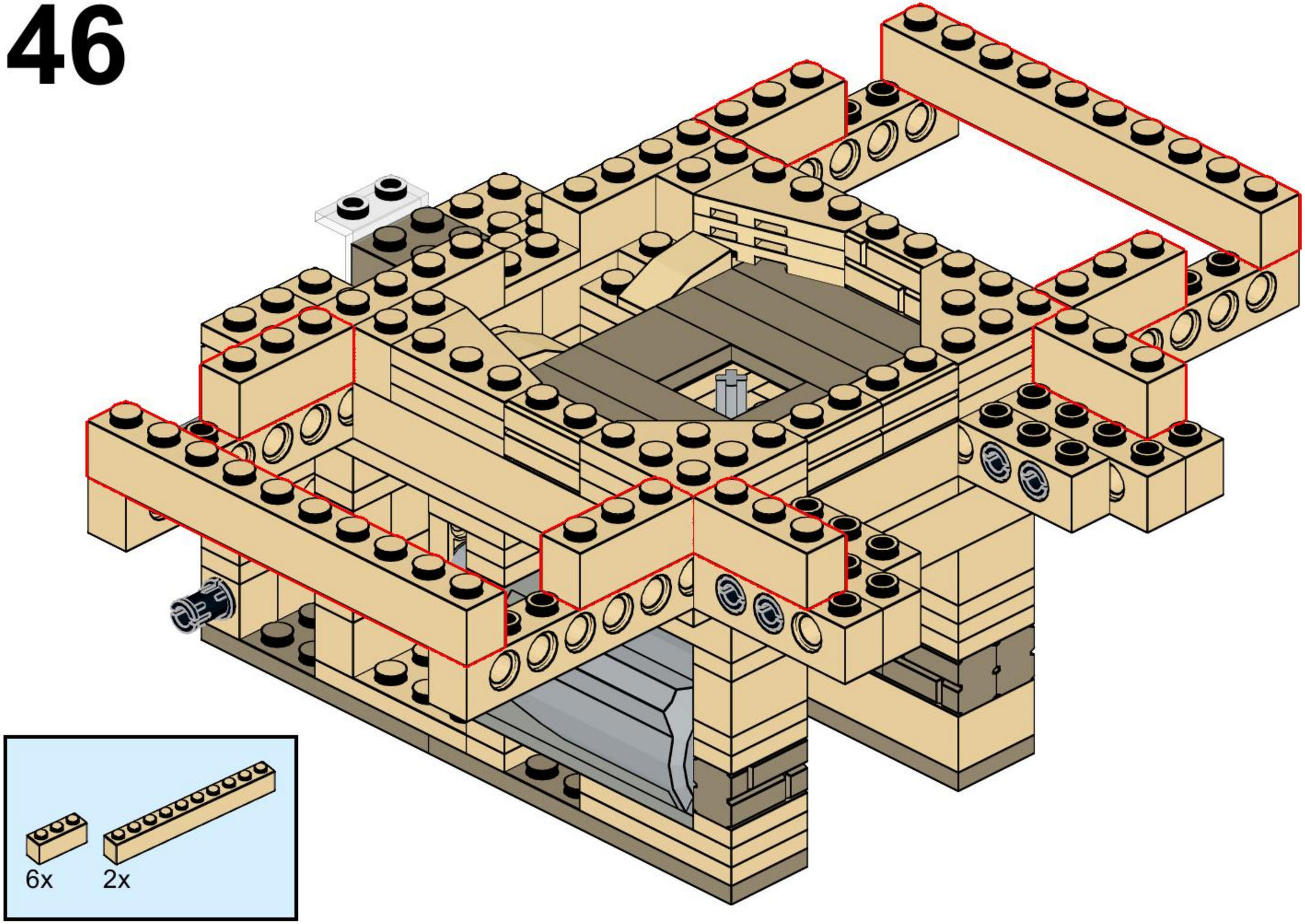

47

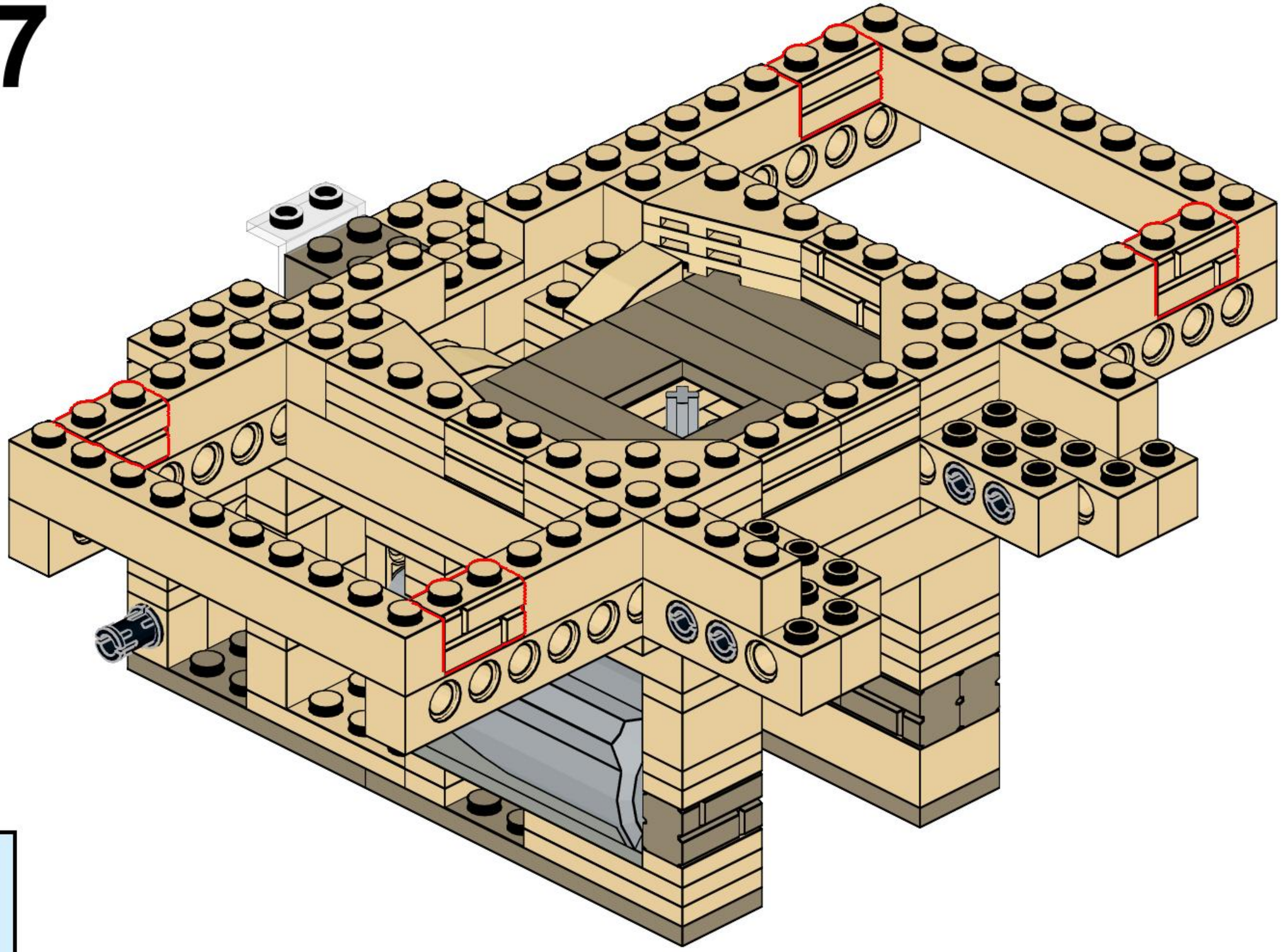

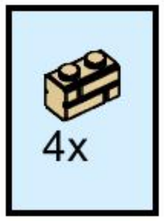

48

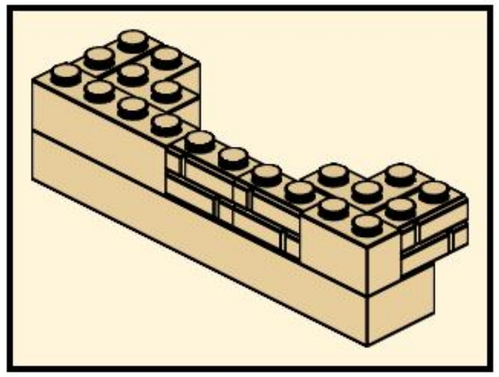

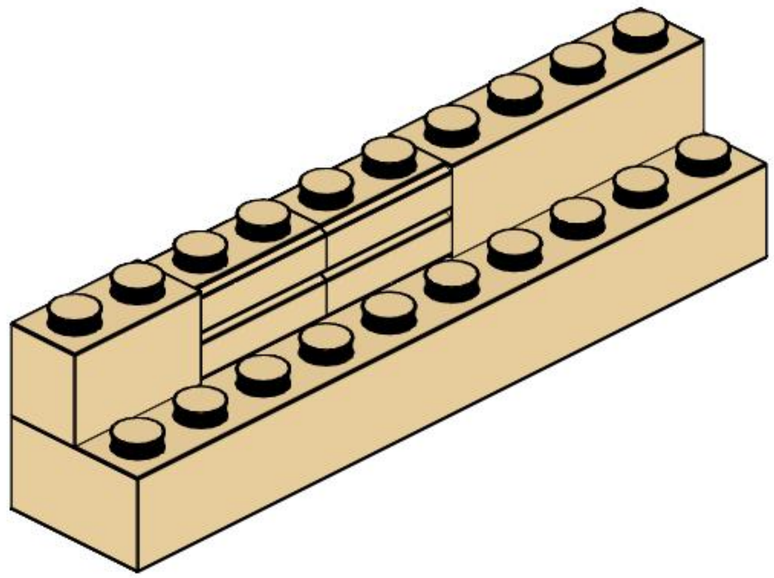

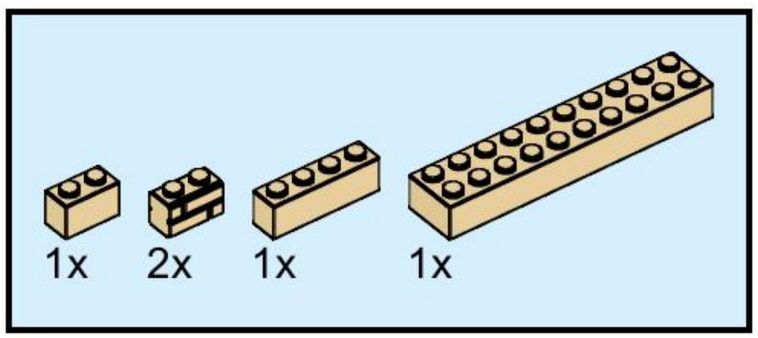

49

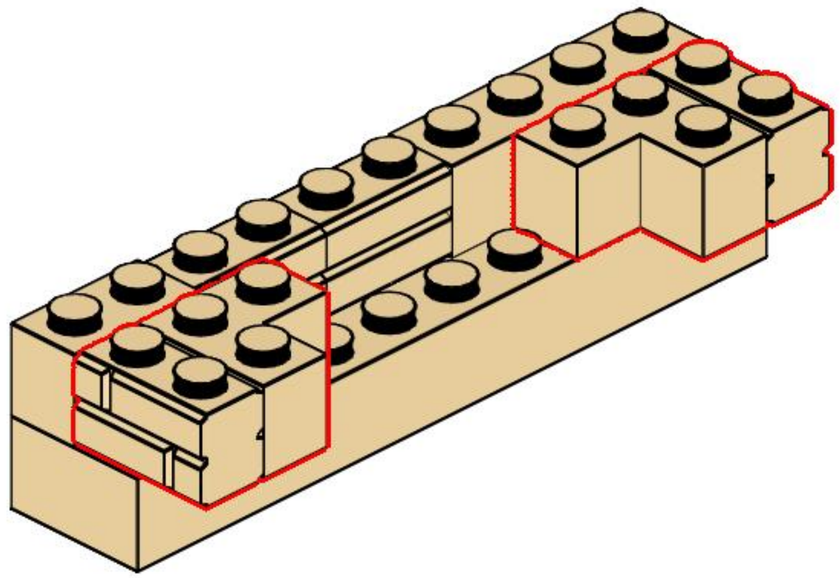

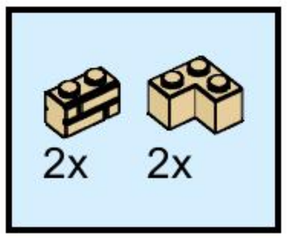

50

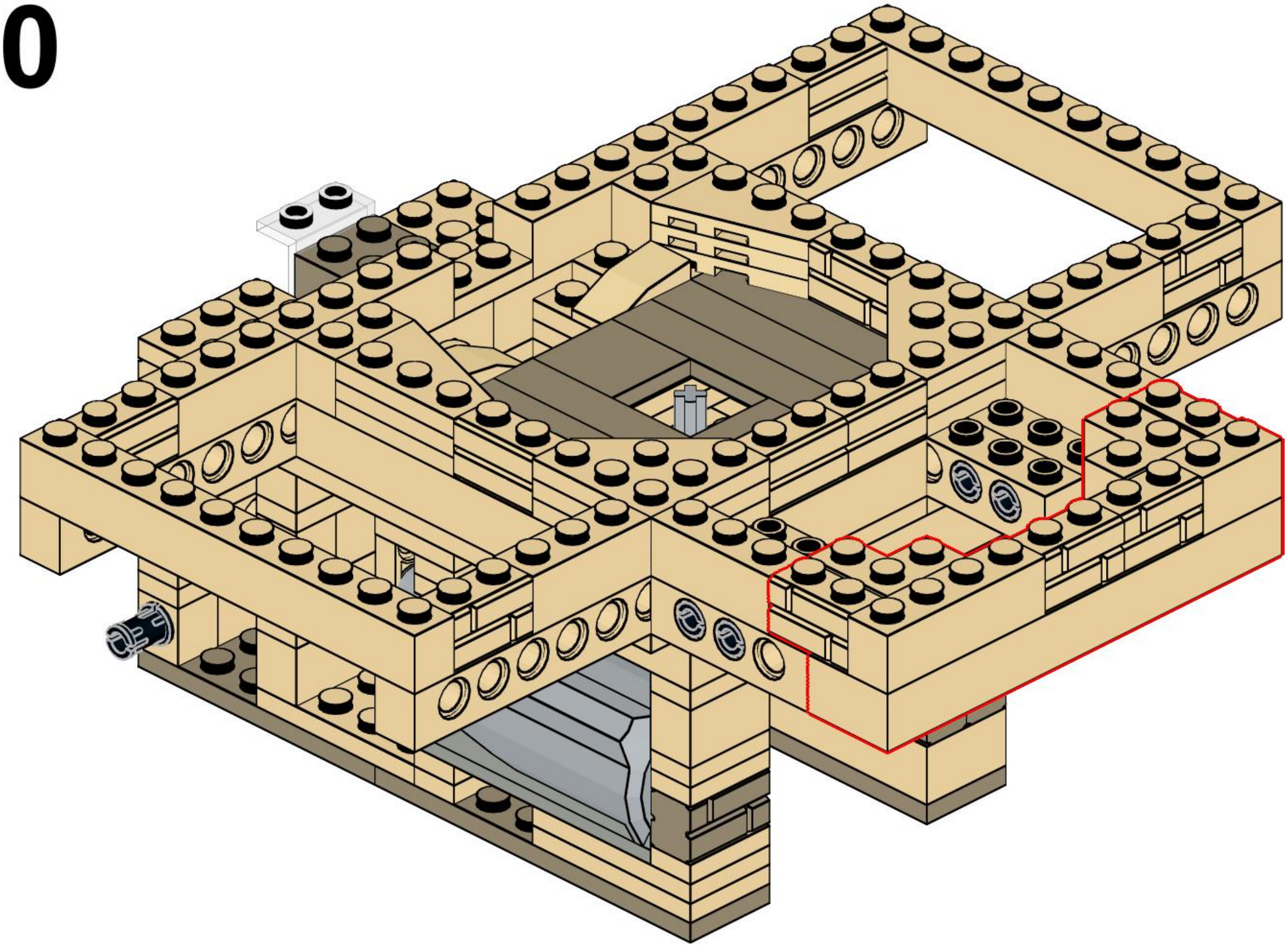

51

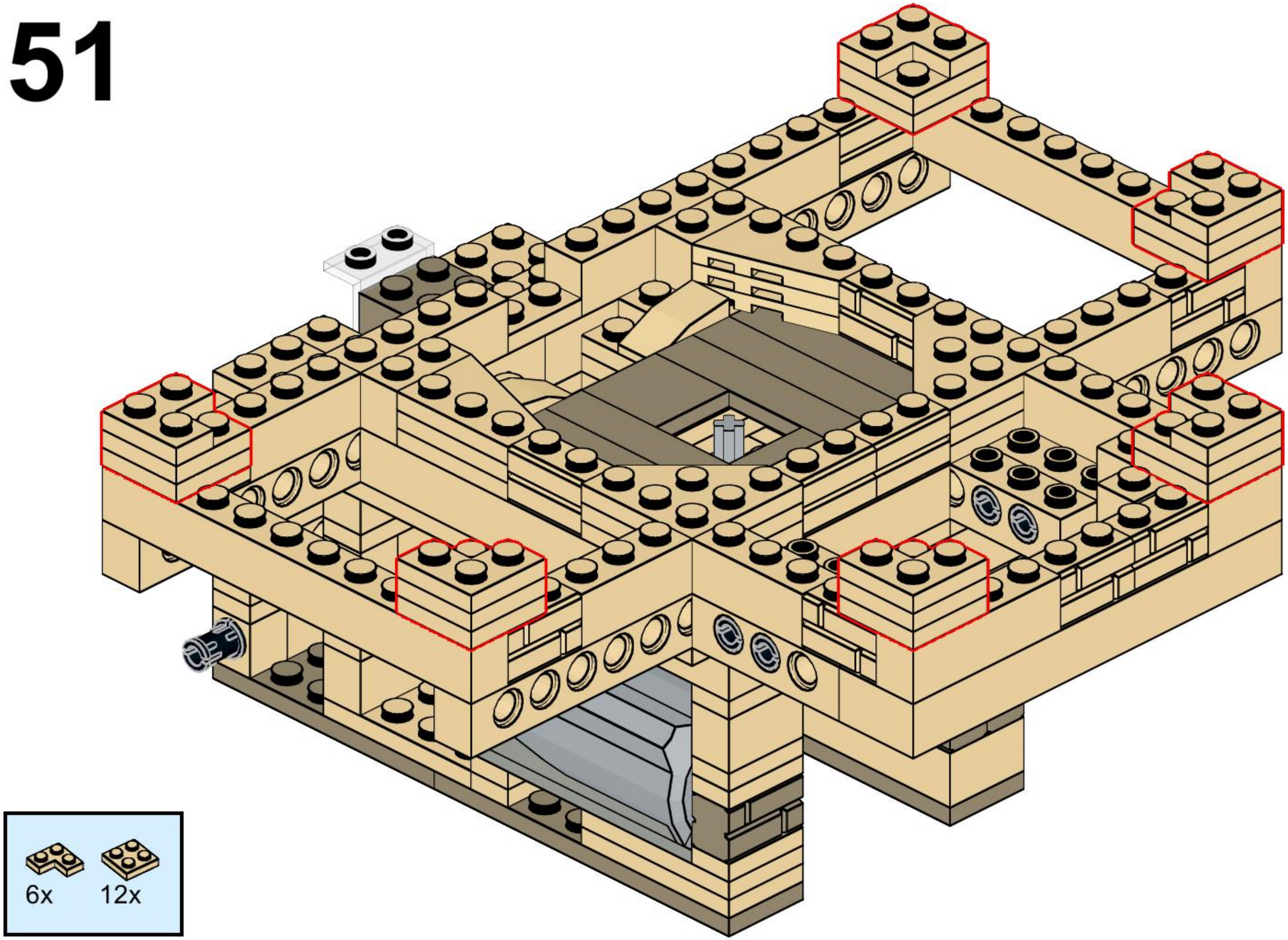

52

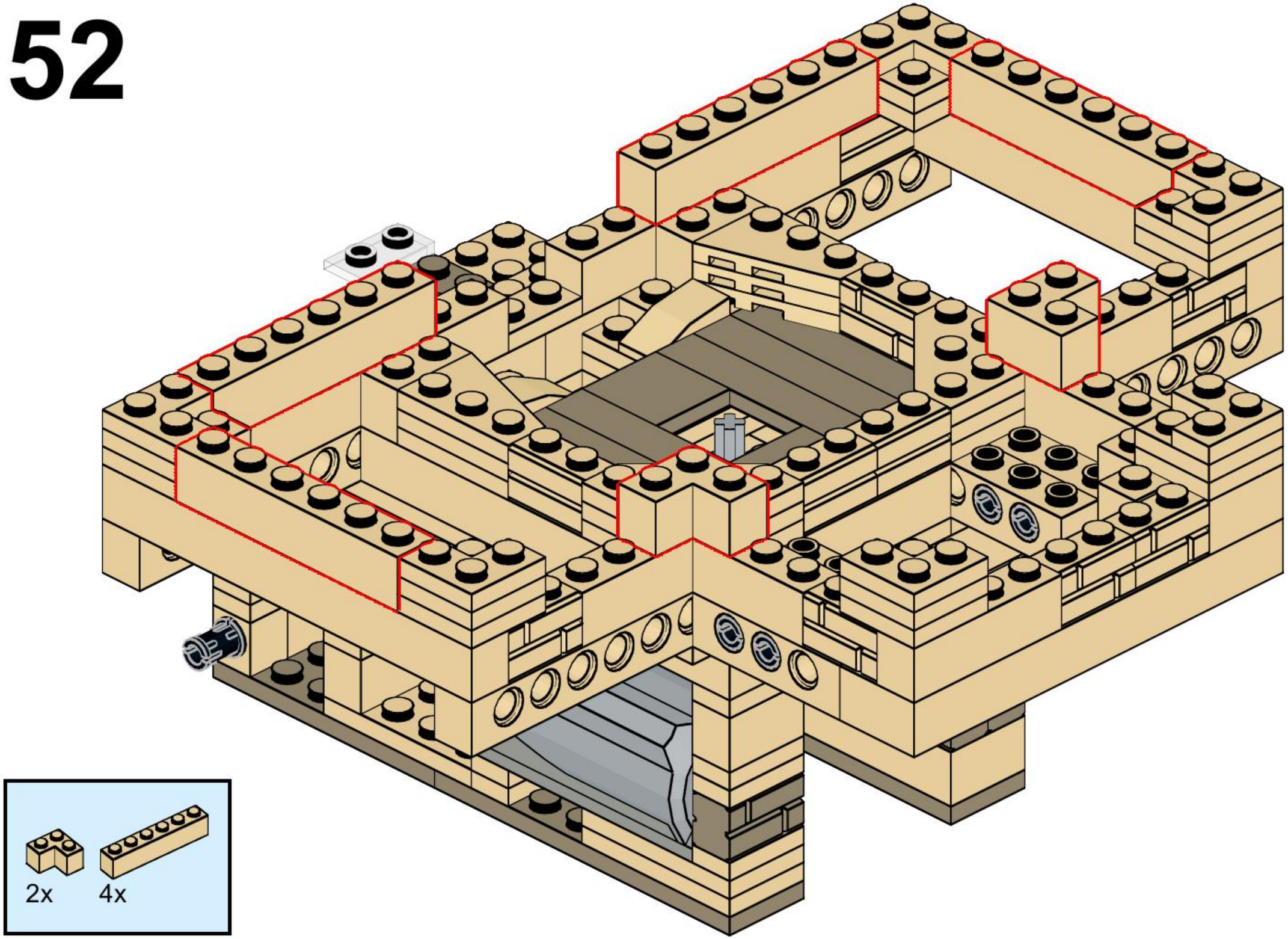

53

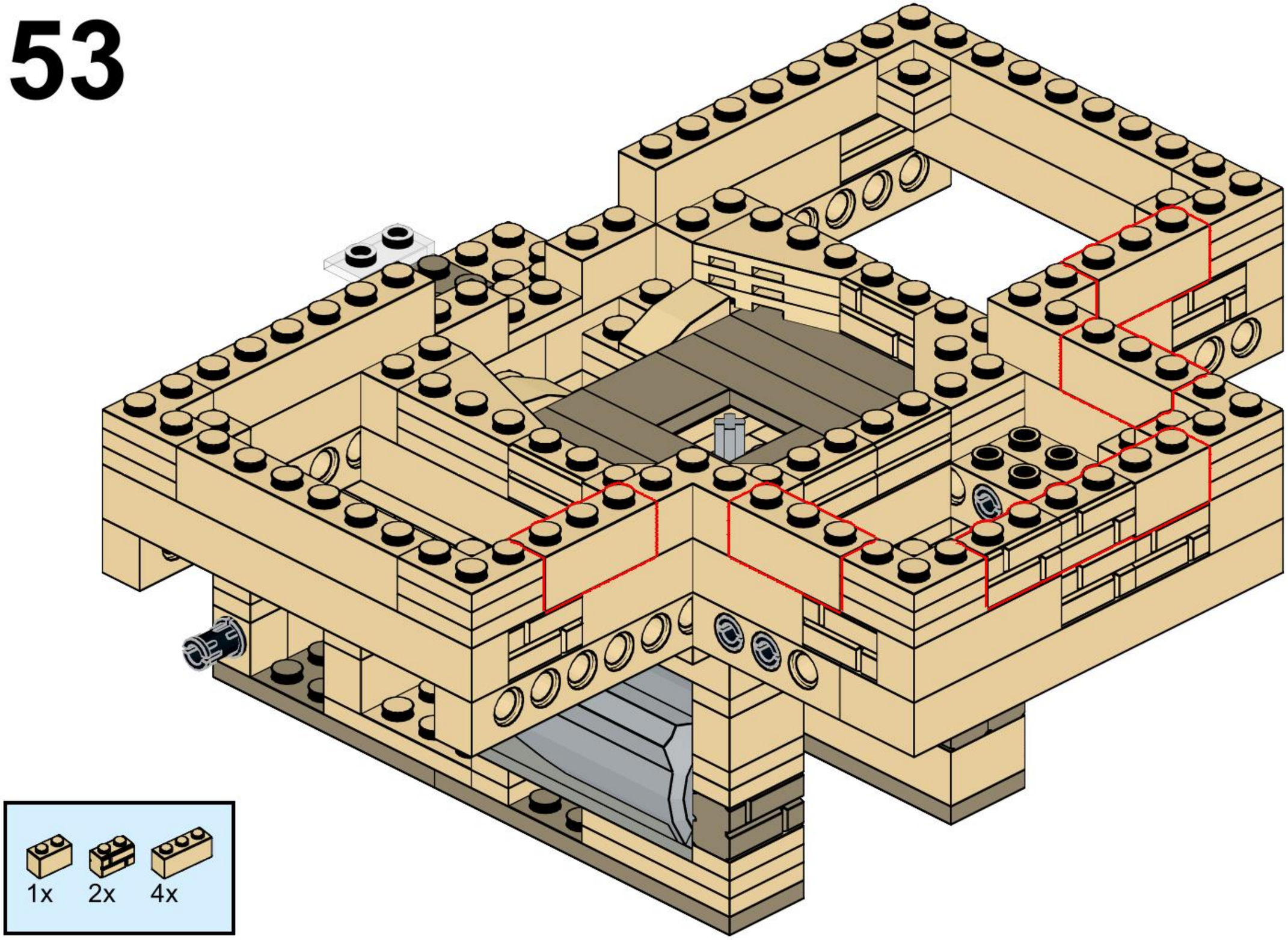

54

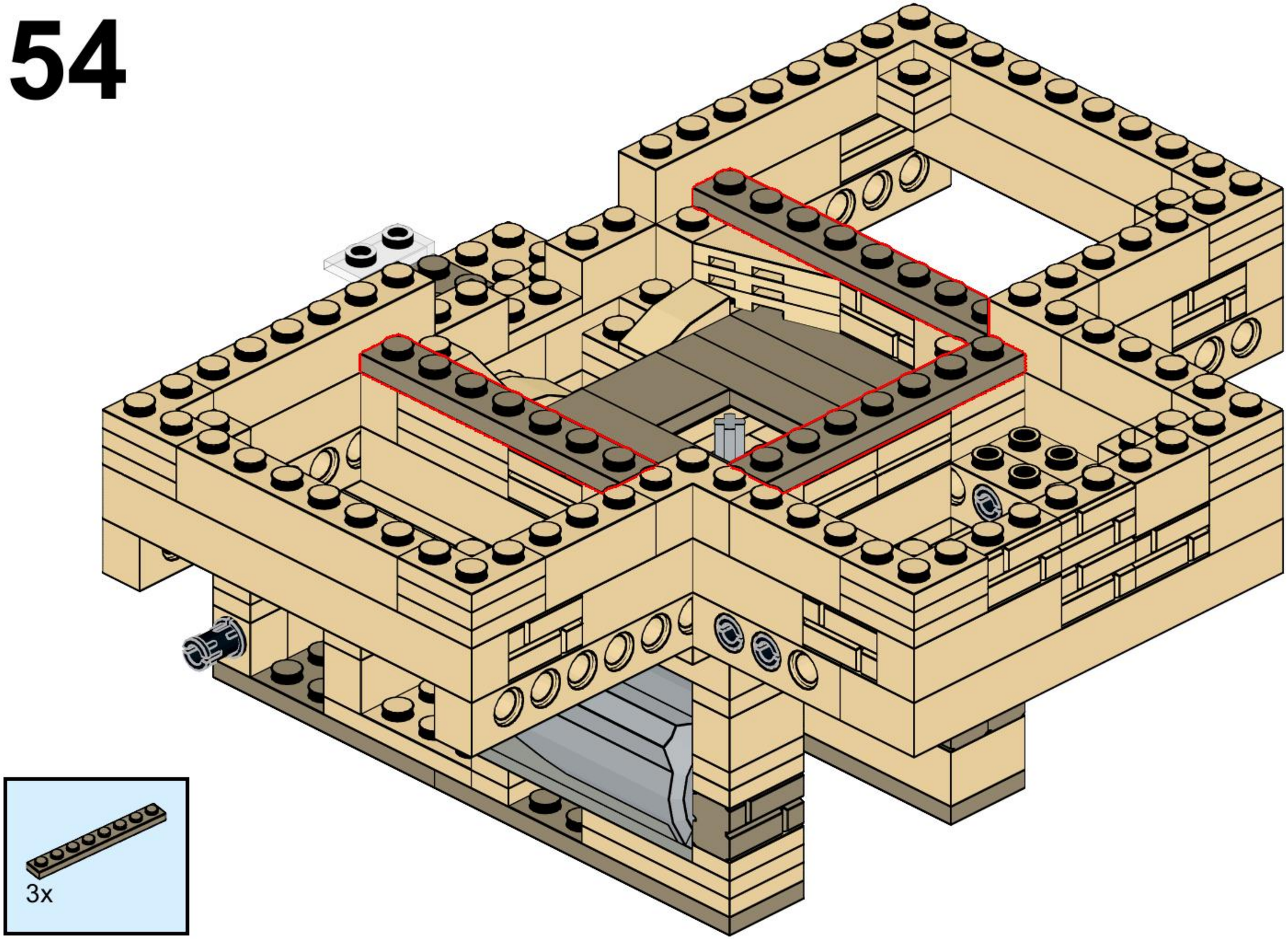

55

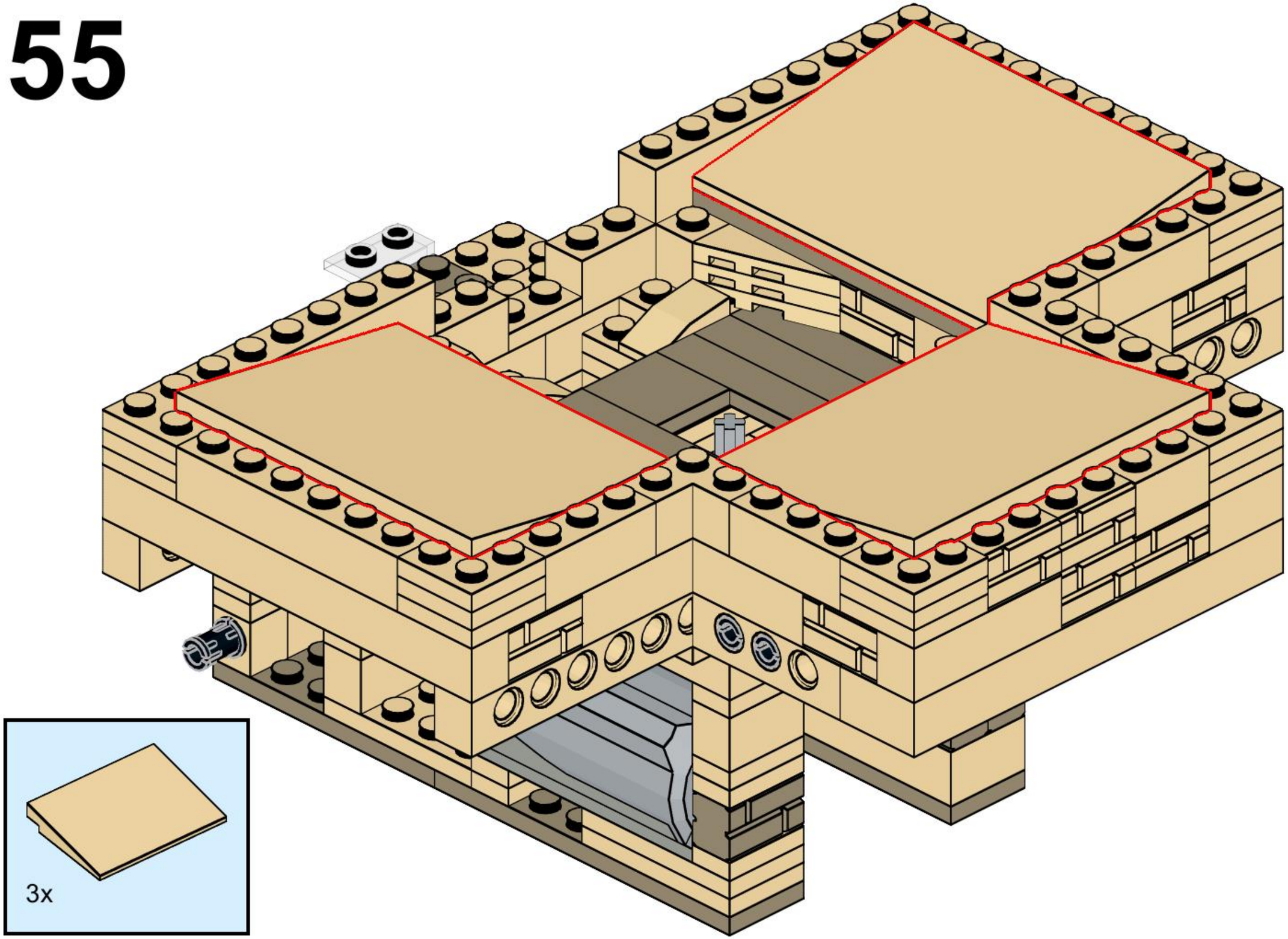

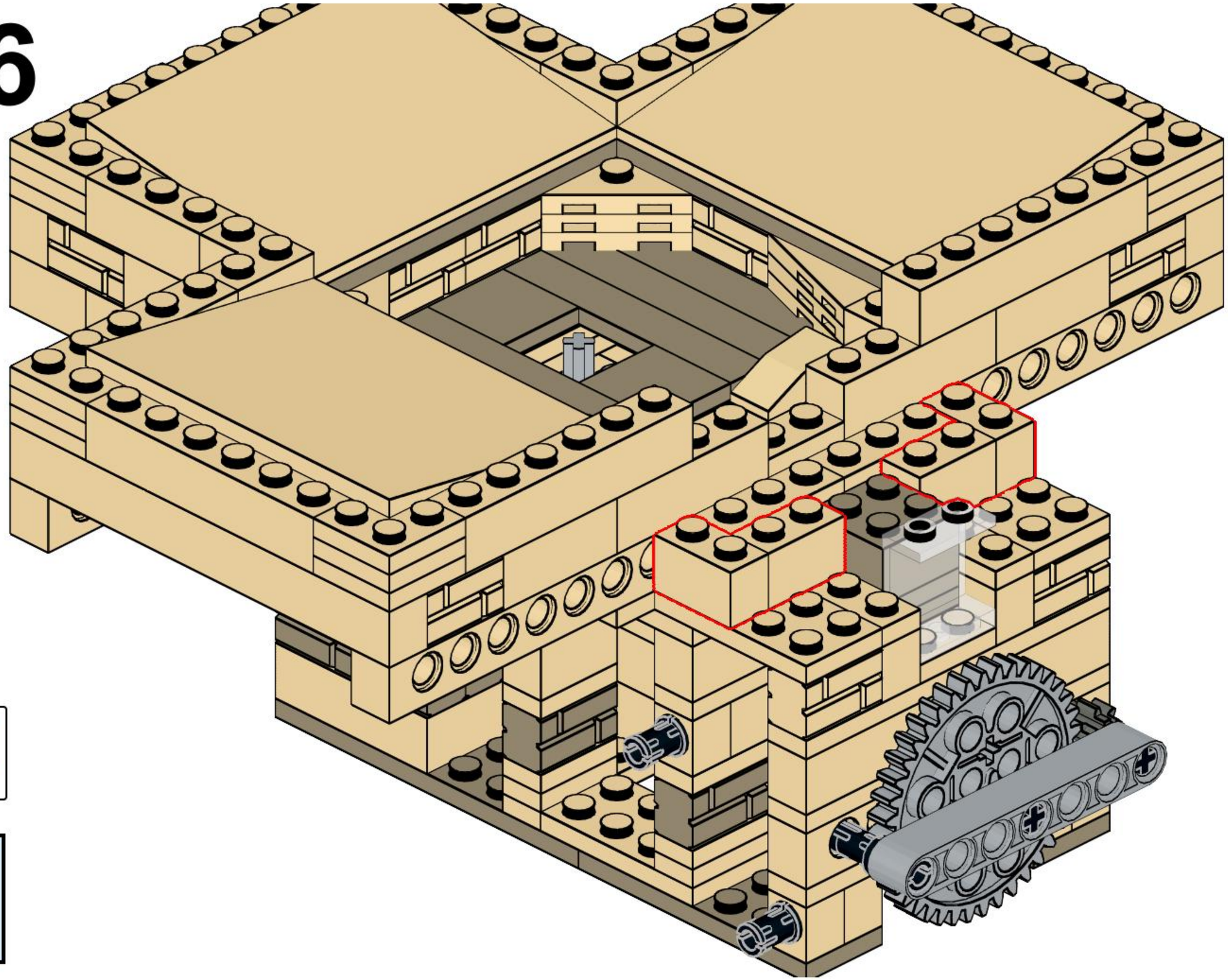

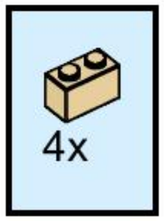
4x

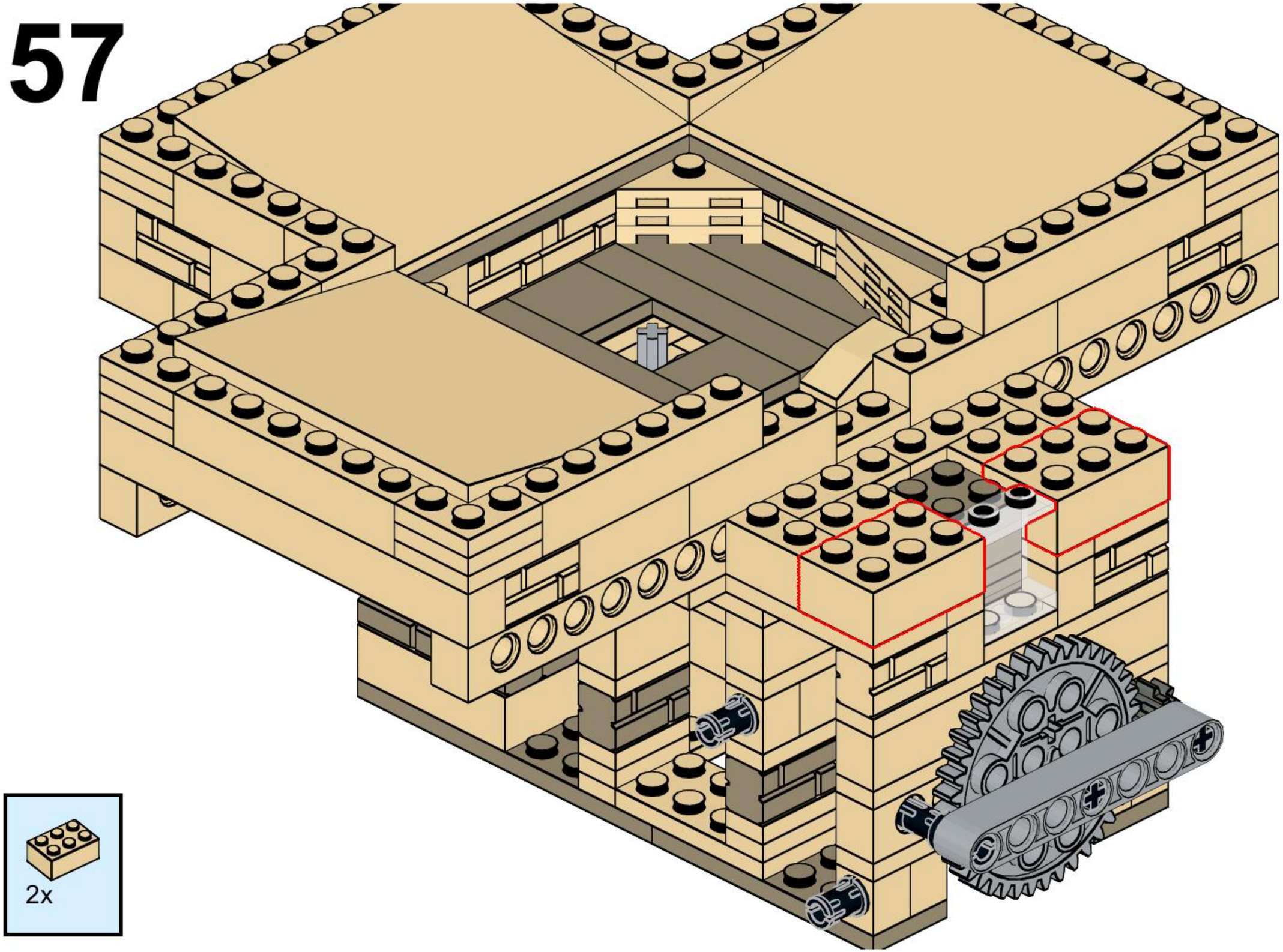
2x

58

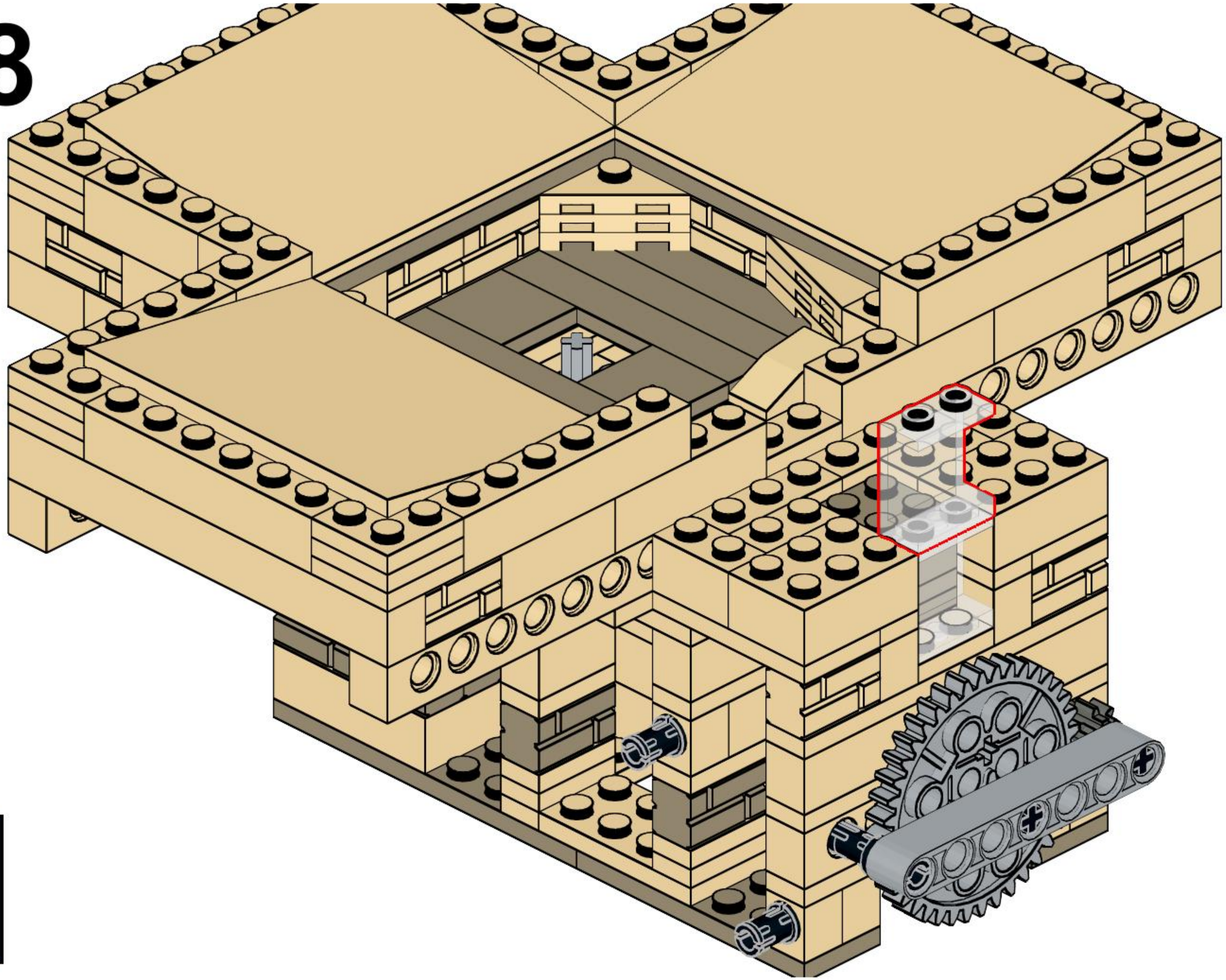

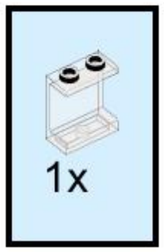

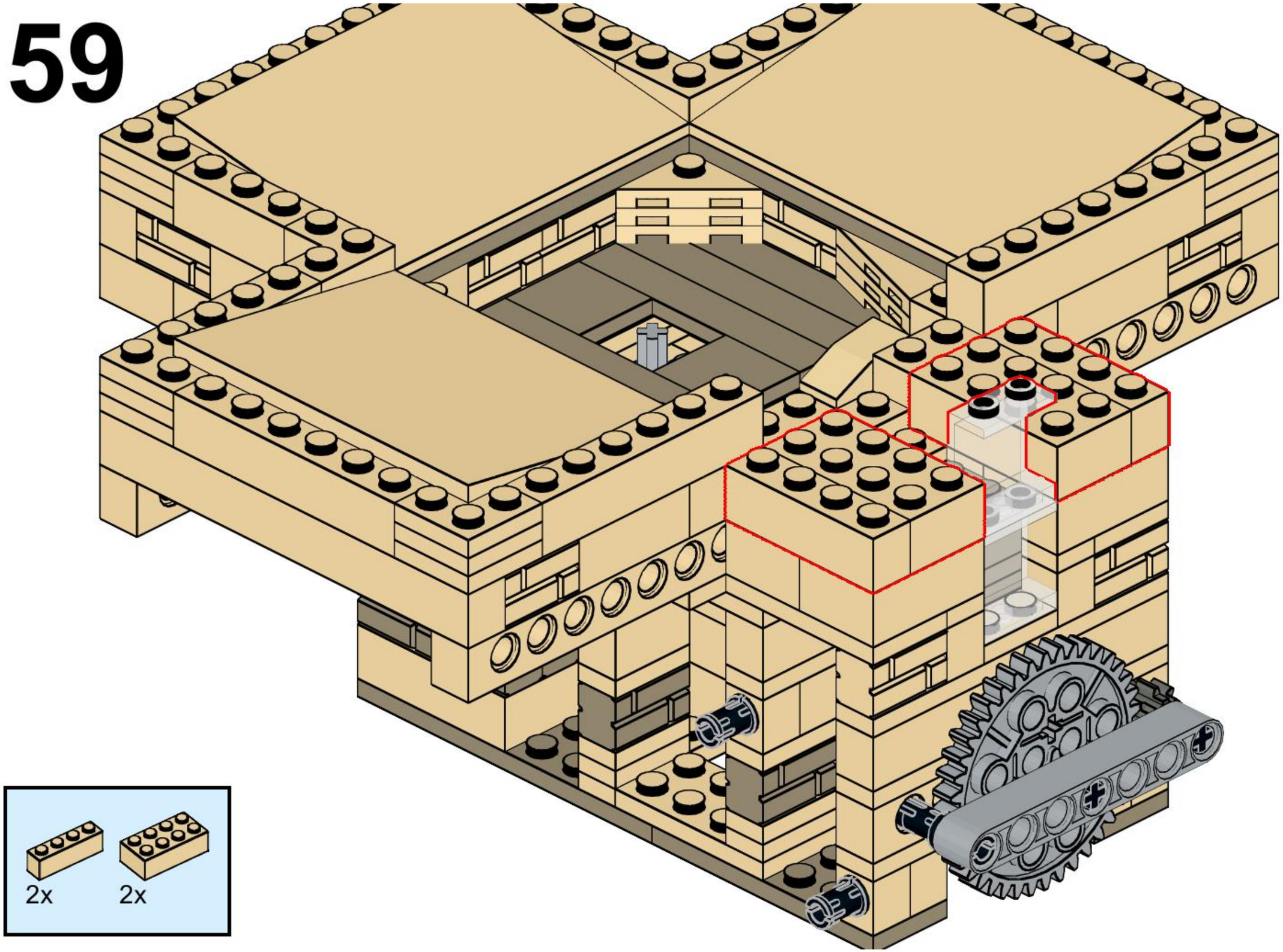
2x
2x

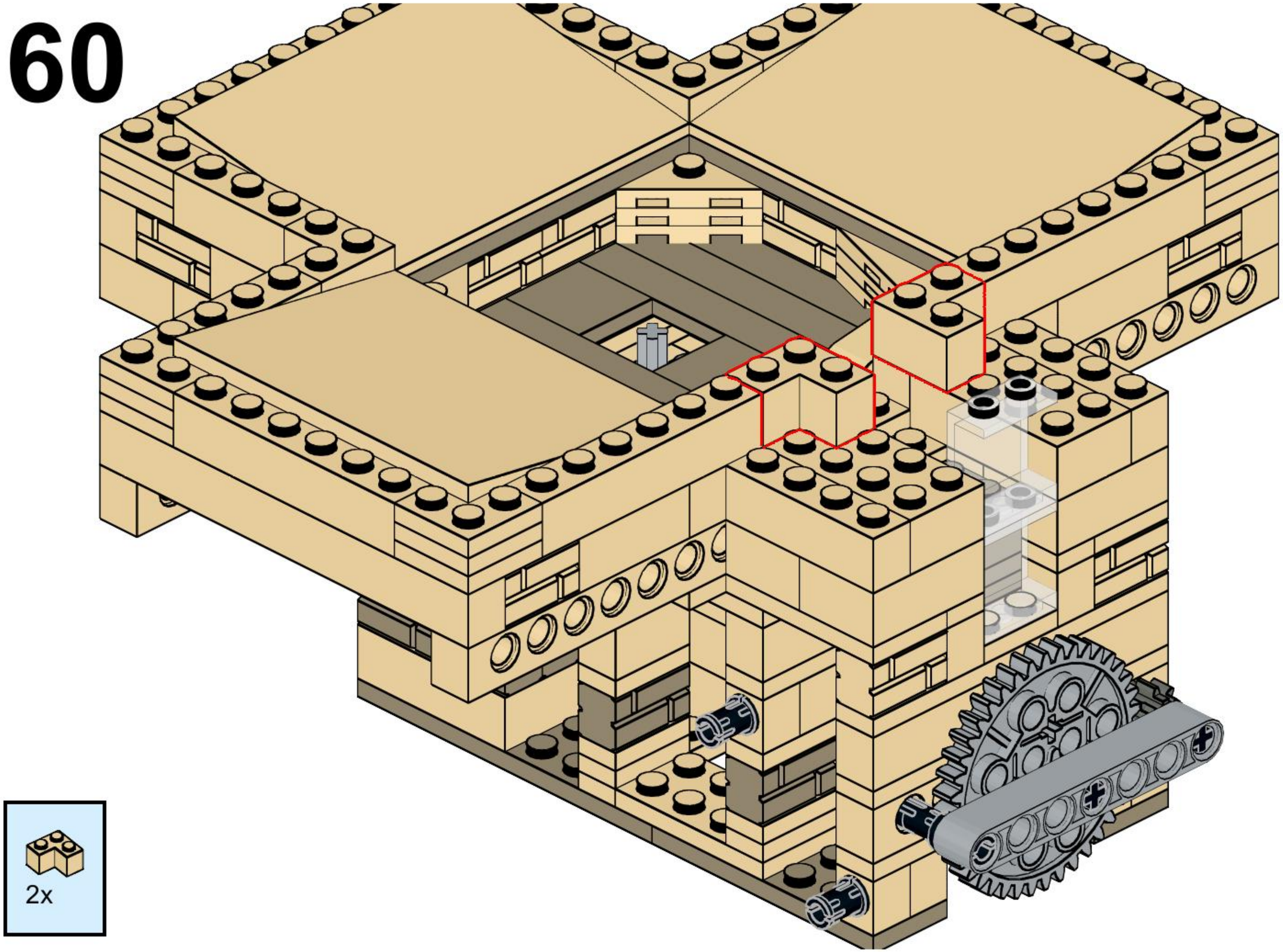

2x

61

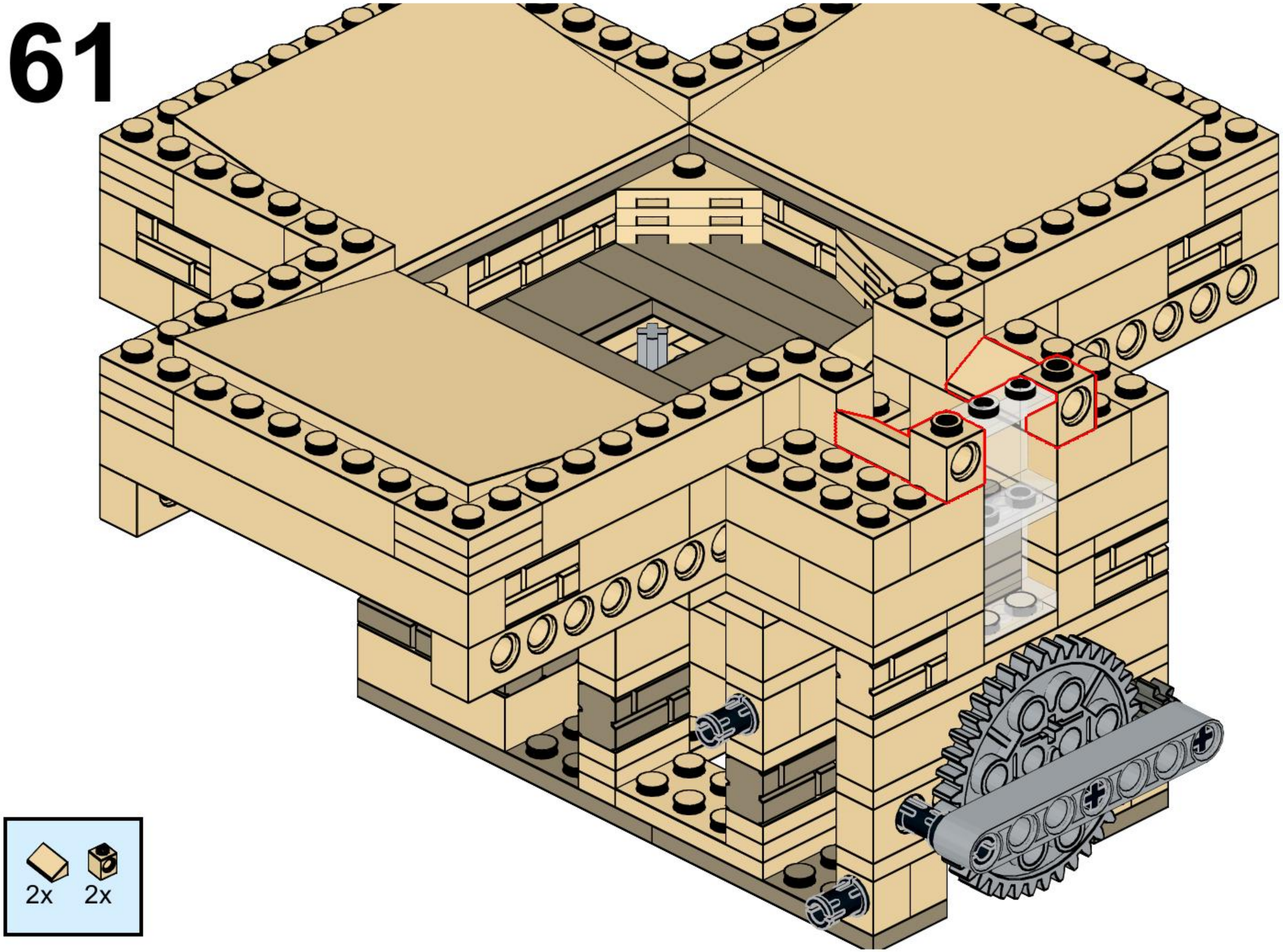

62

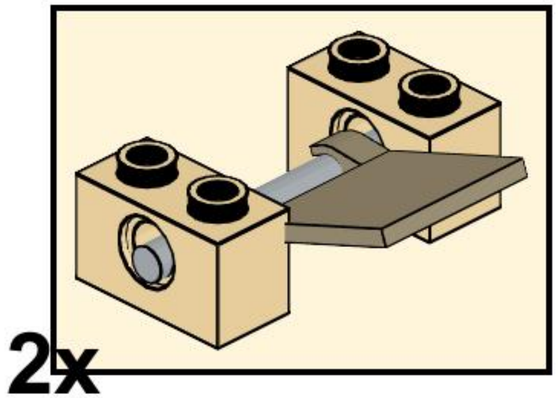

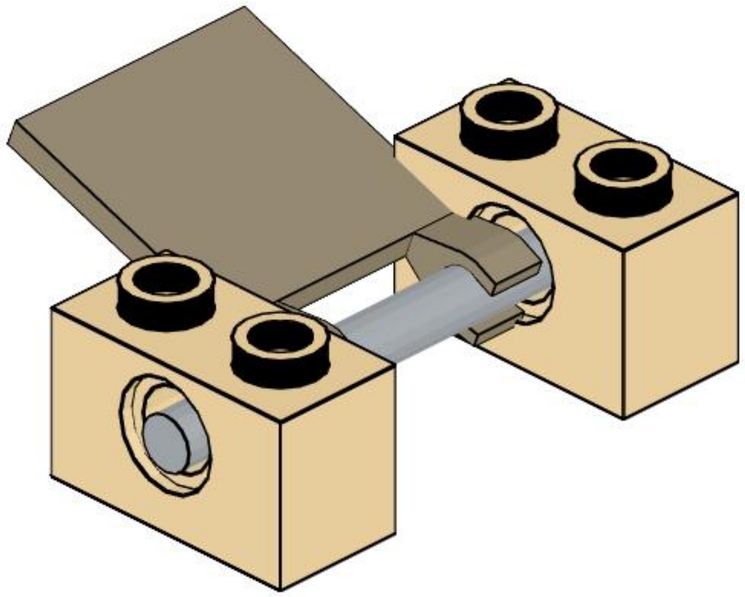

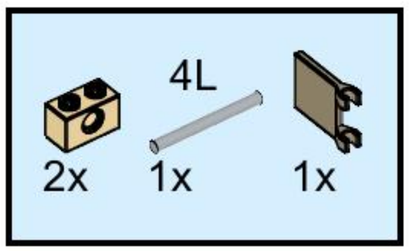

63

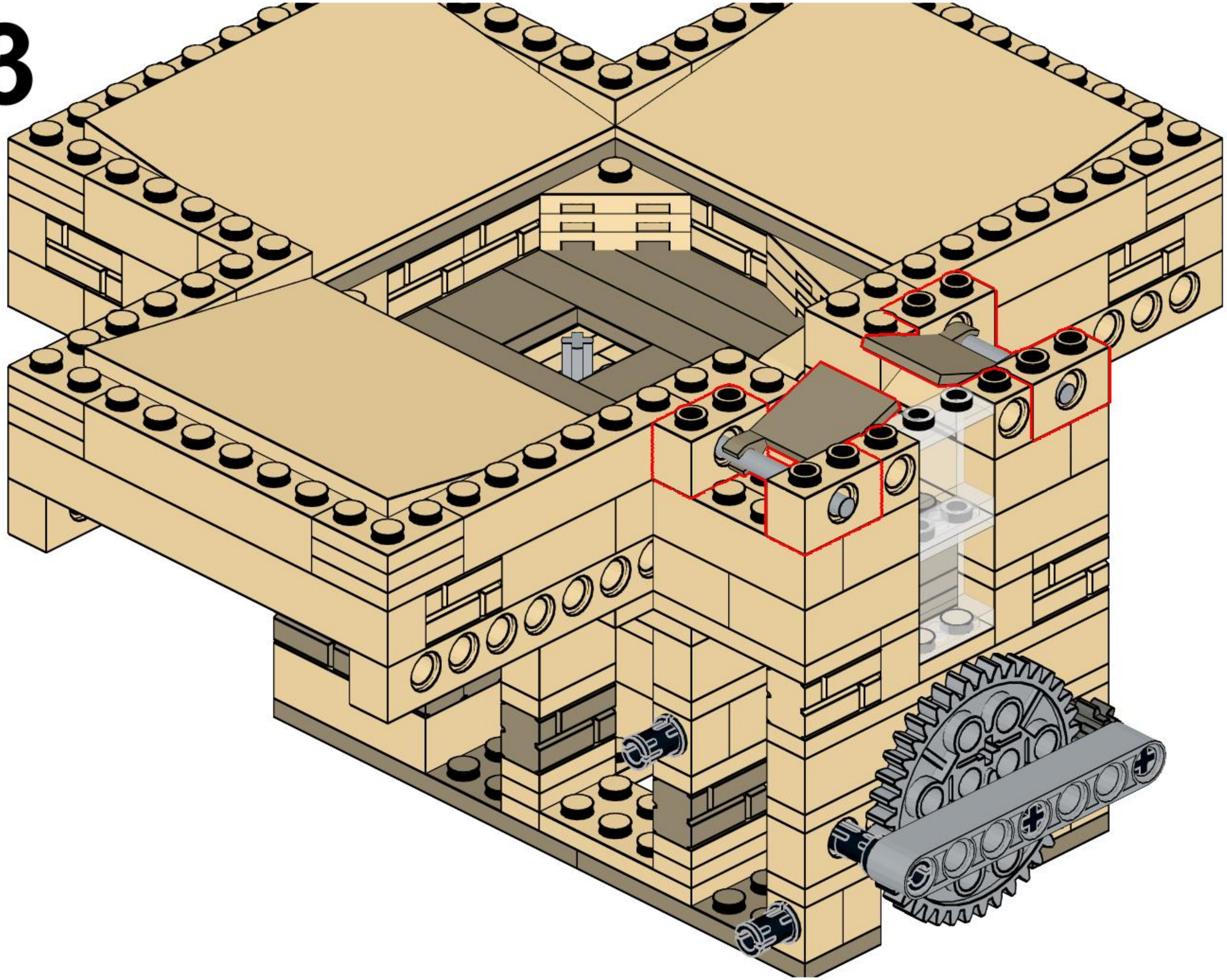

64

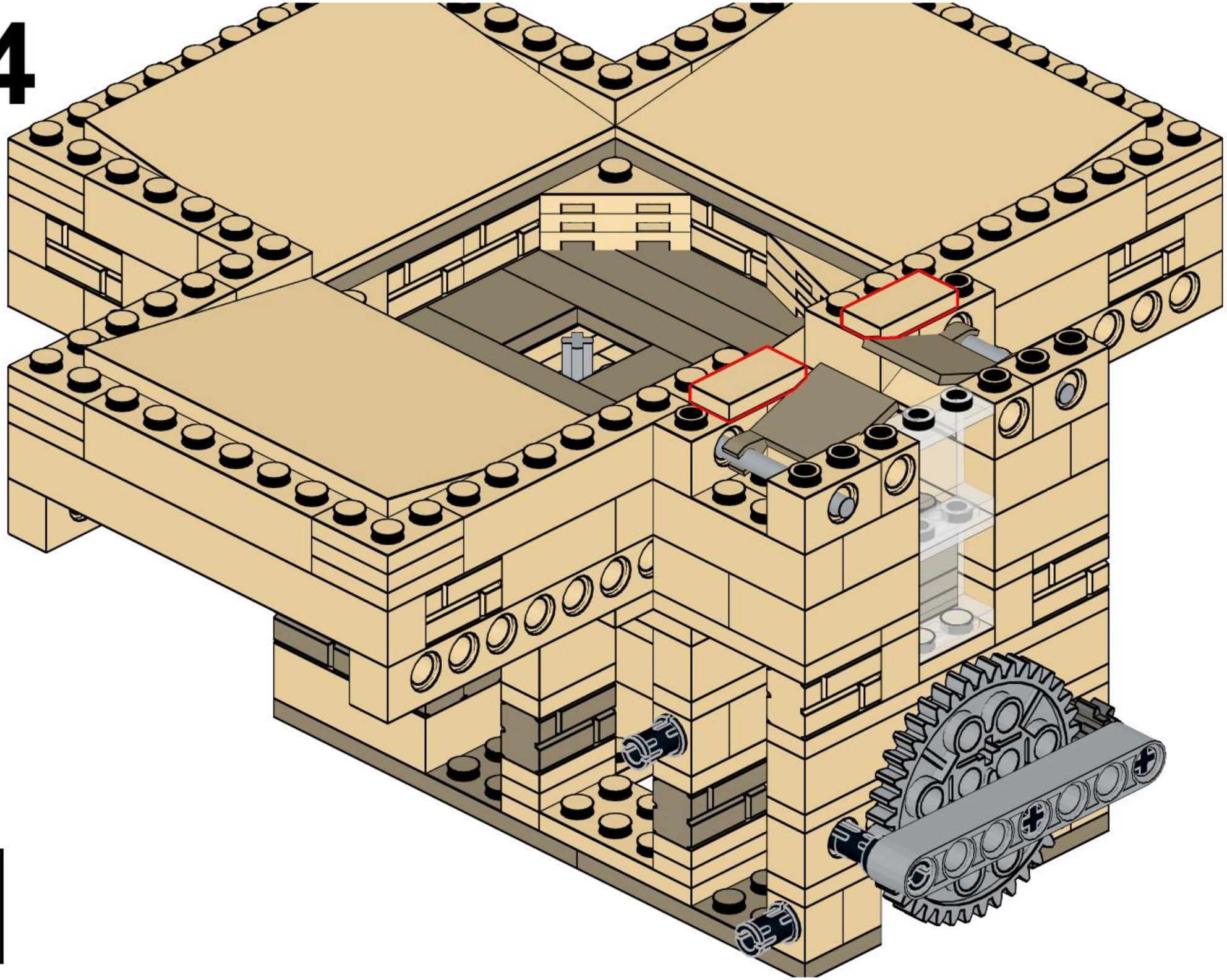

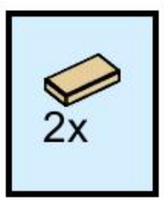

65

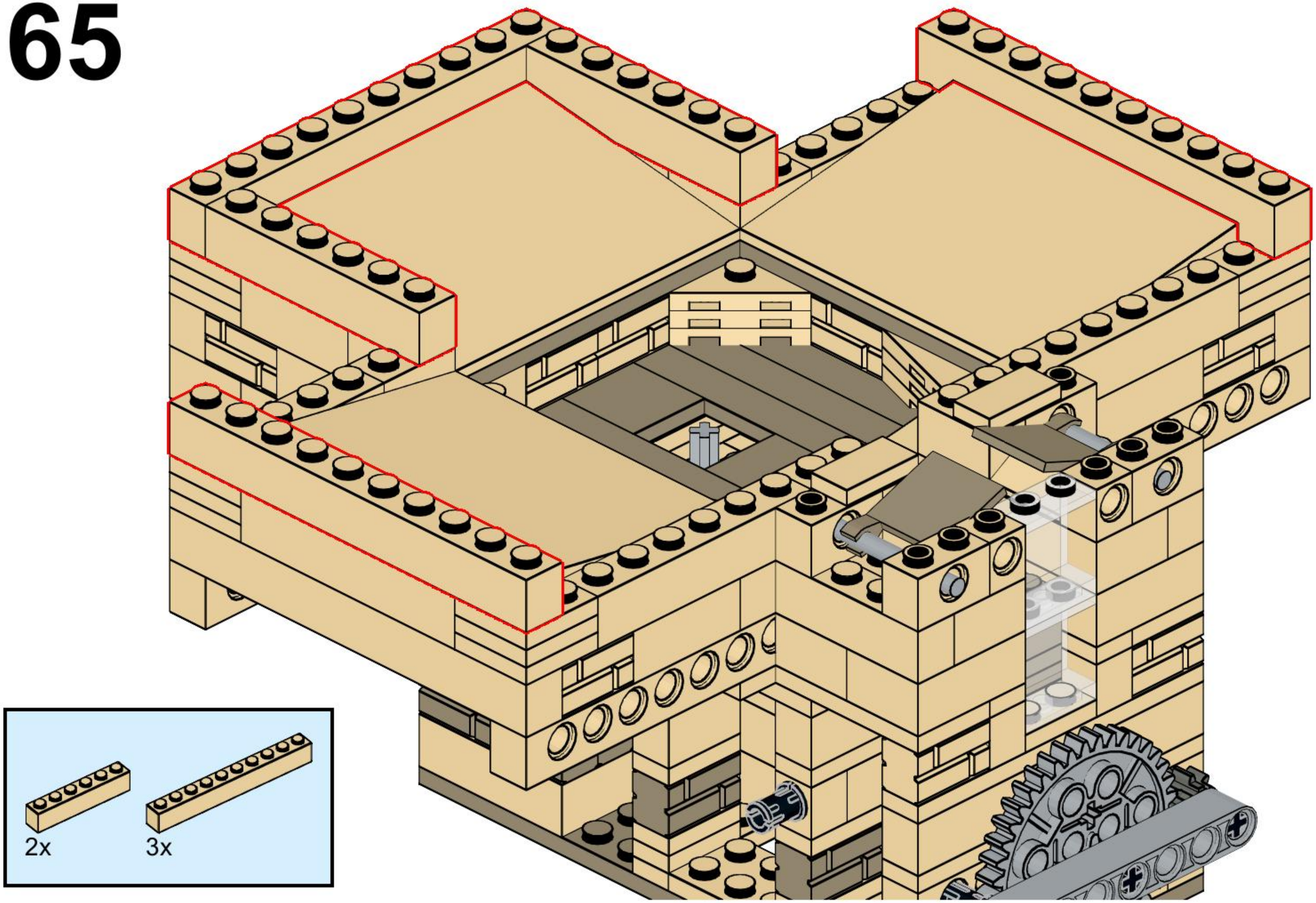

66

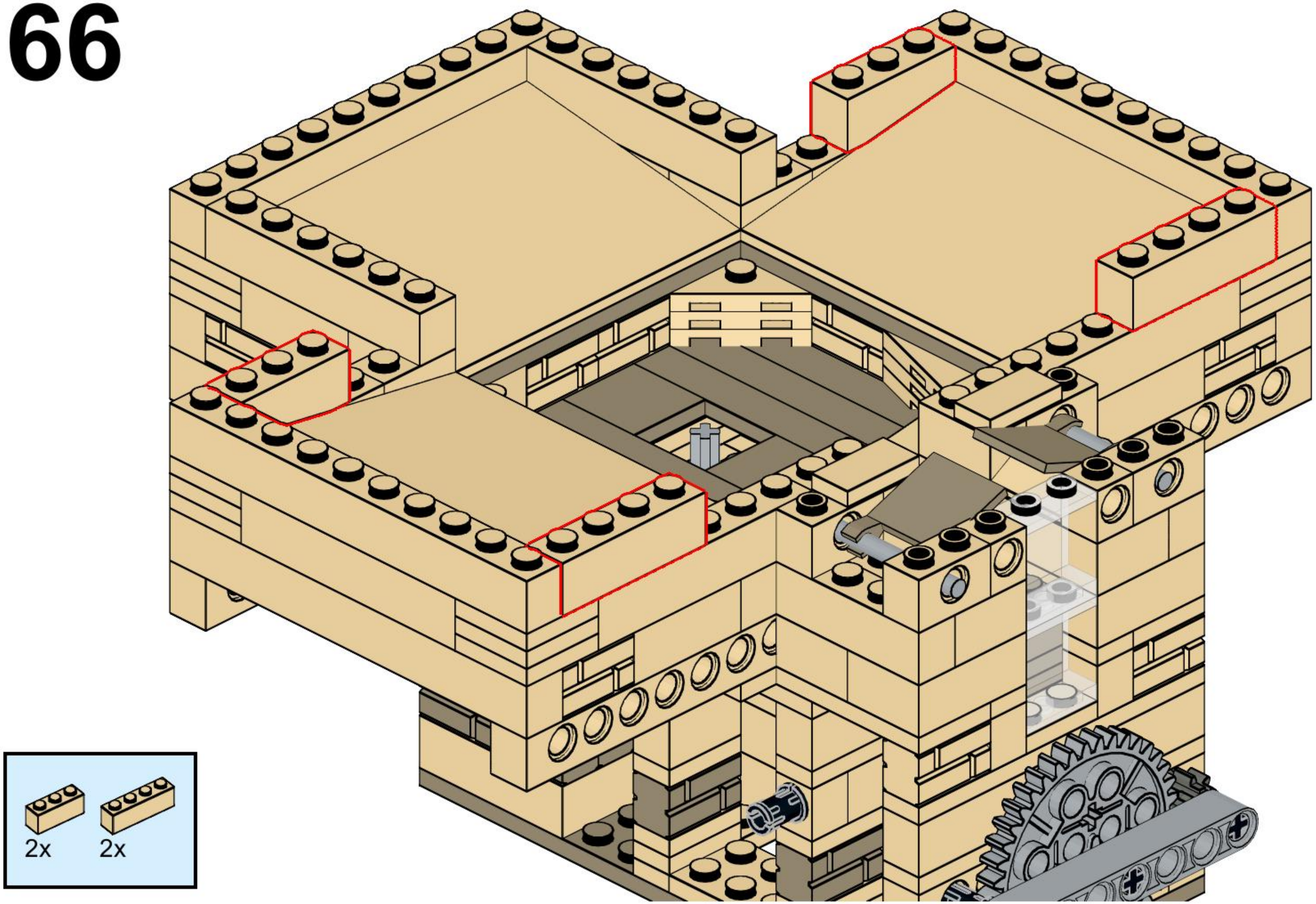

67

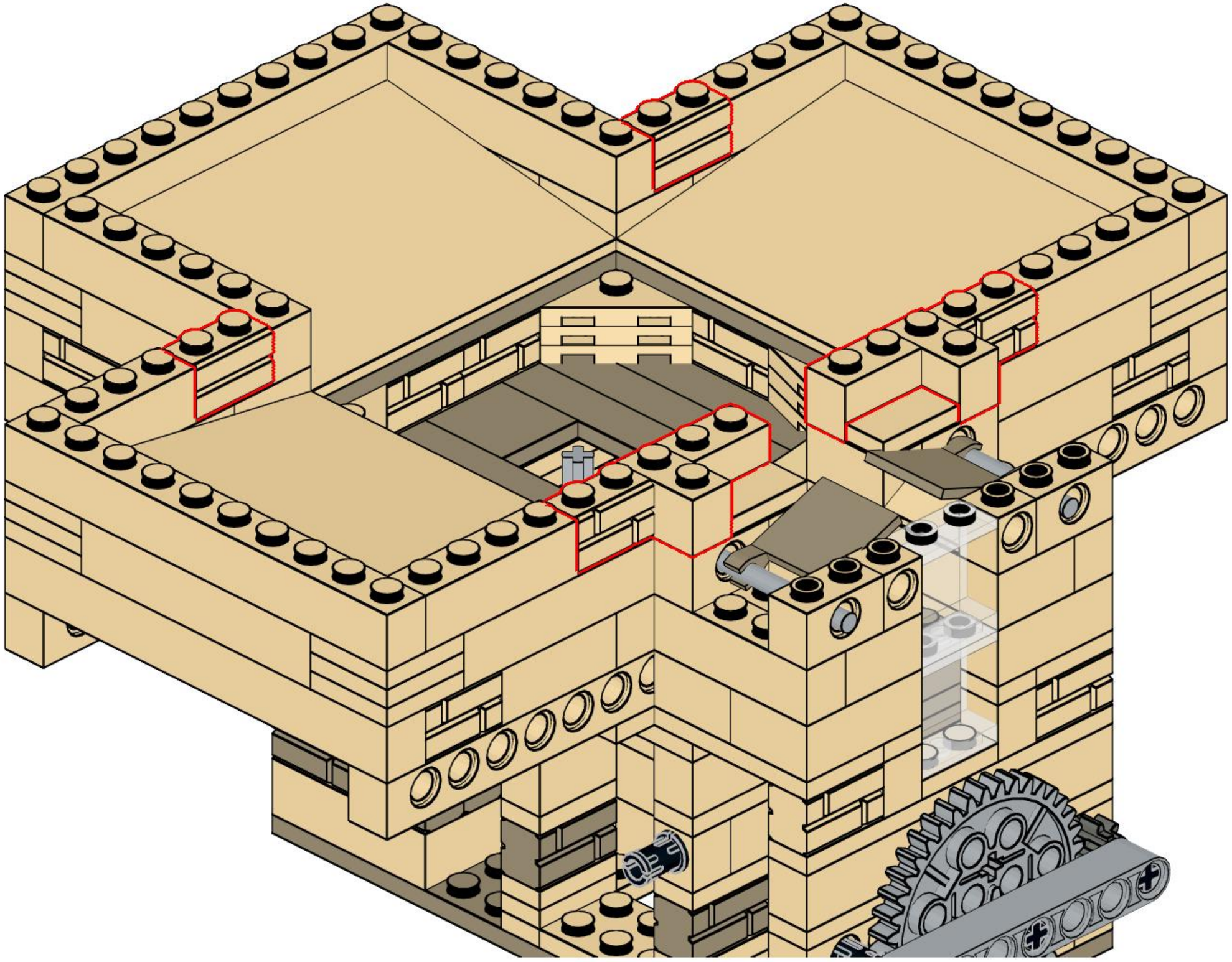

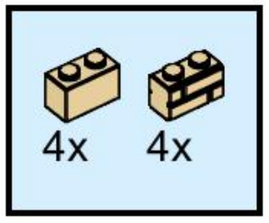

68

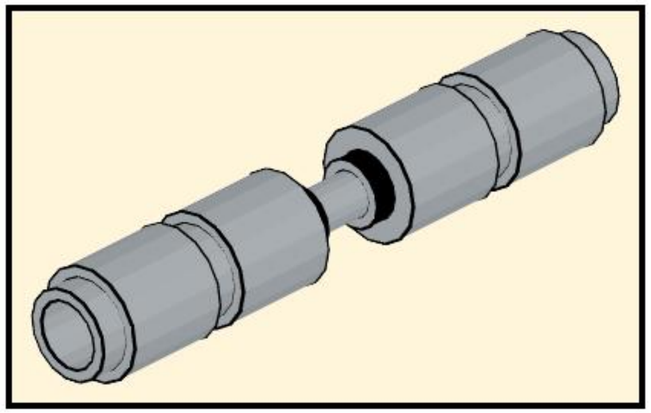

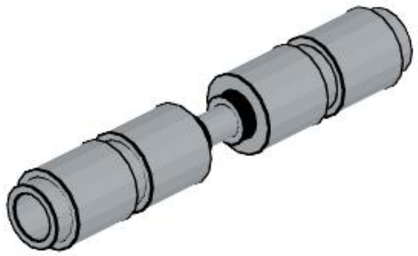

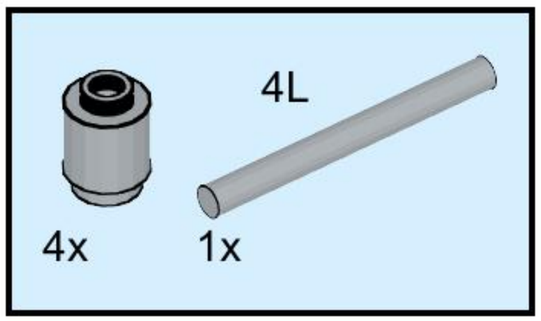

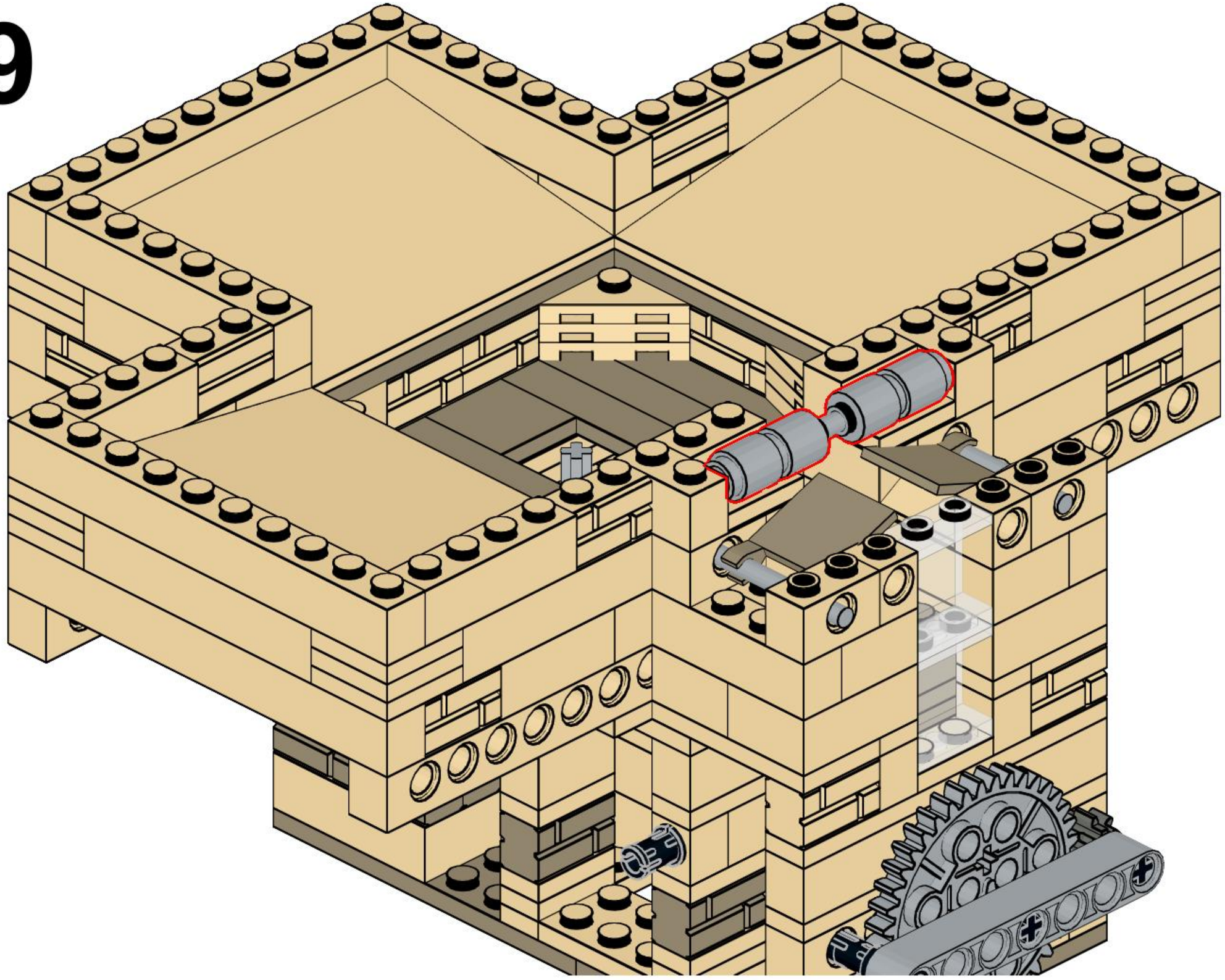

70

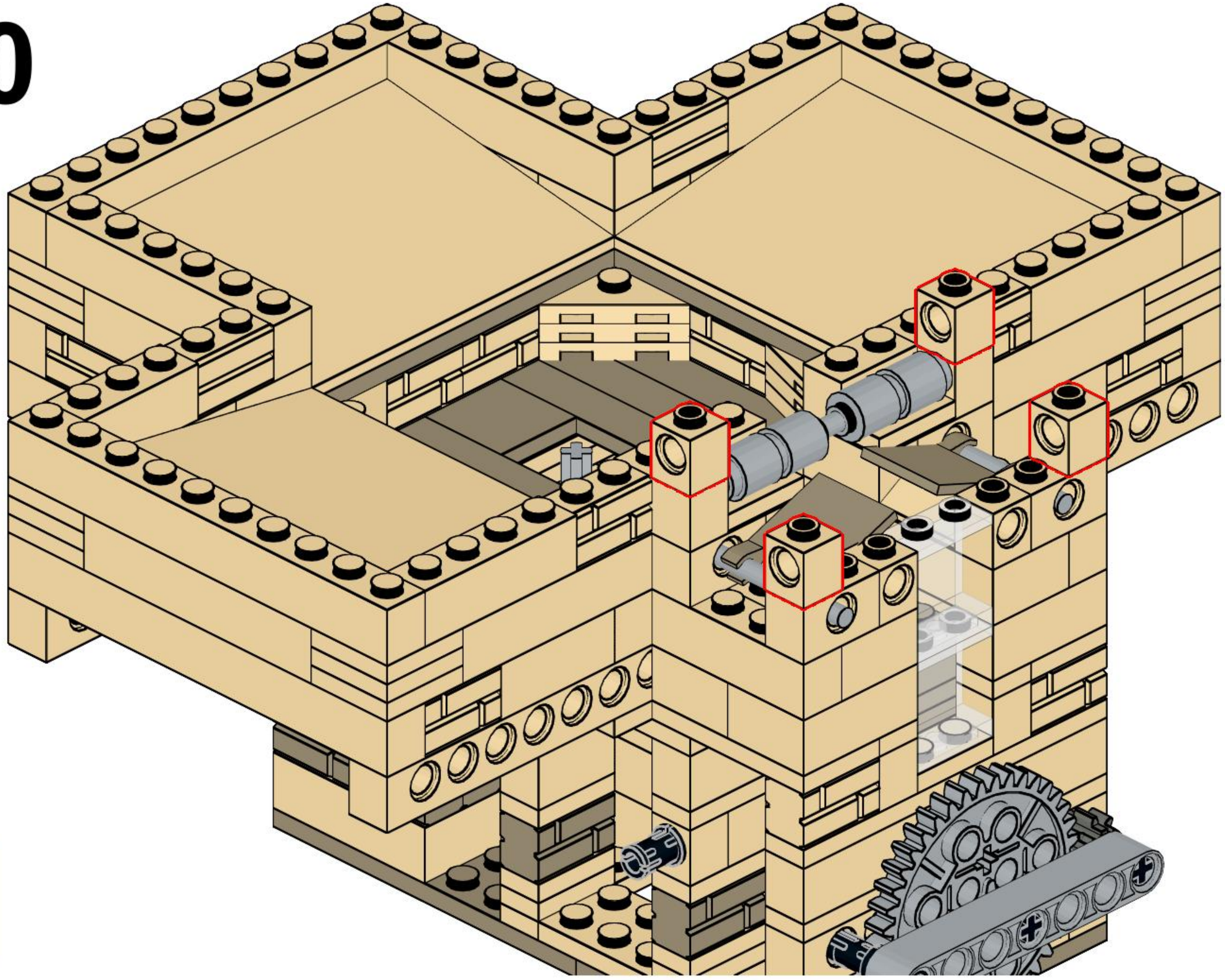

71

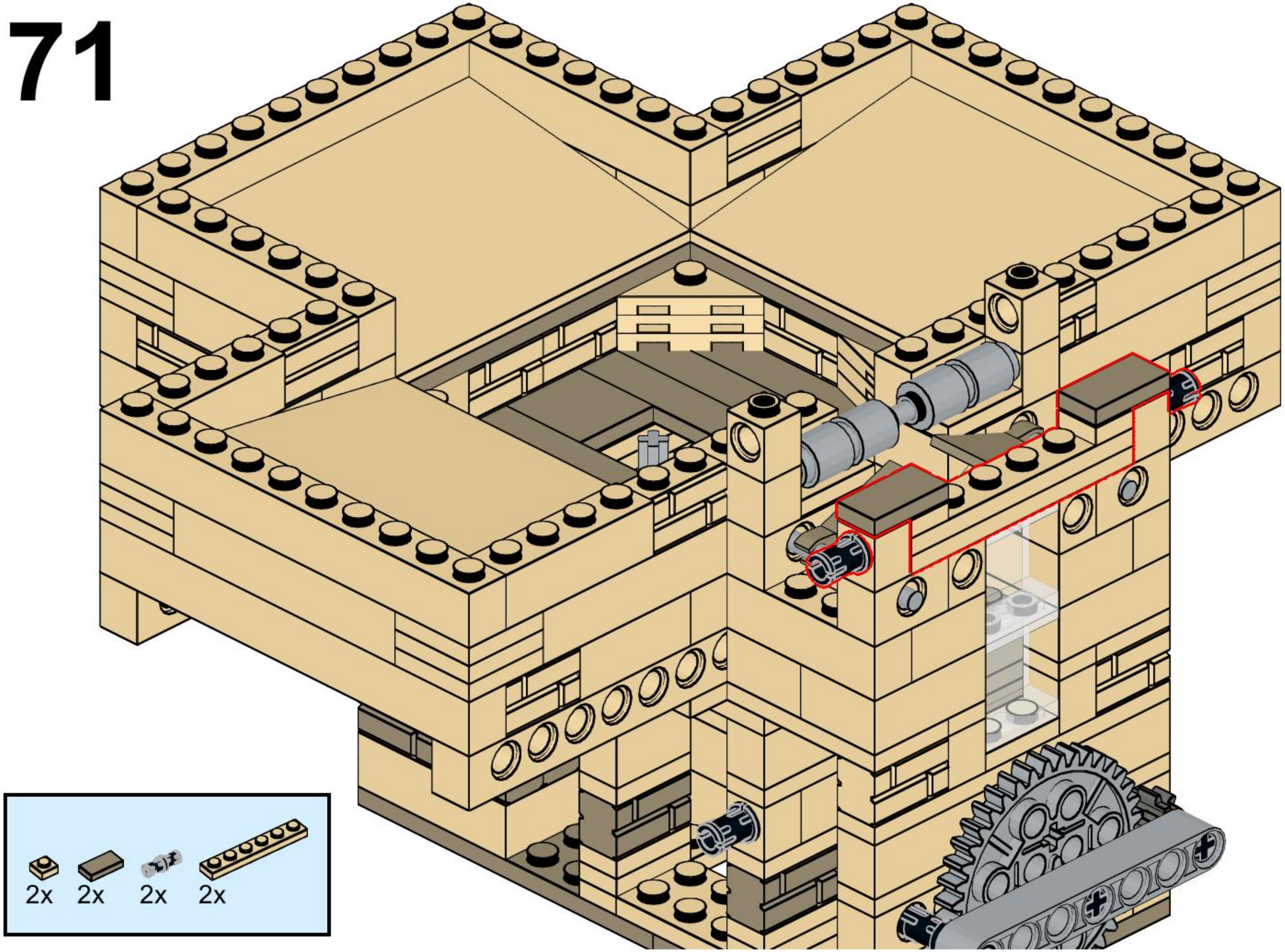

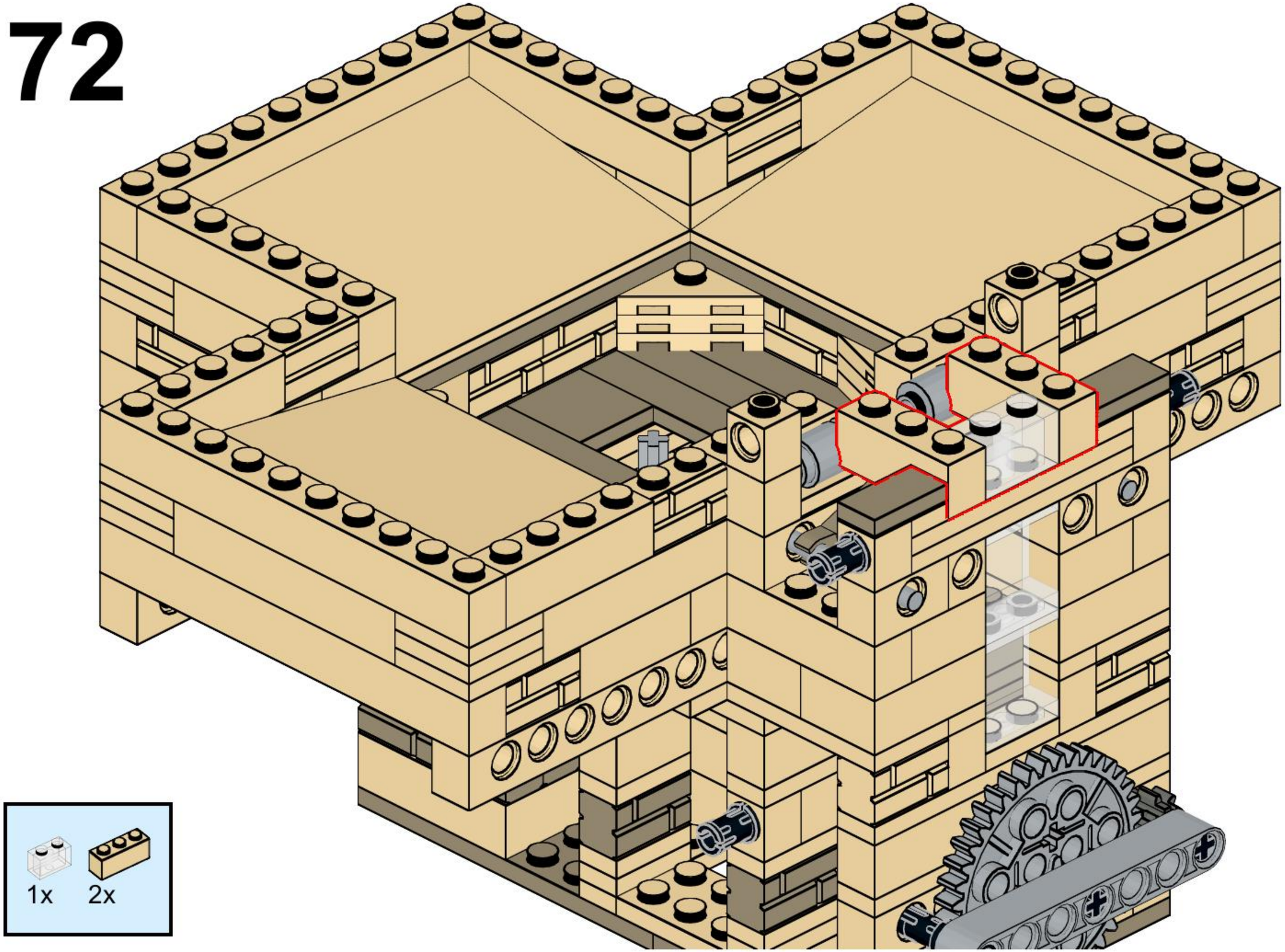
1x
2x

73

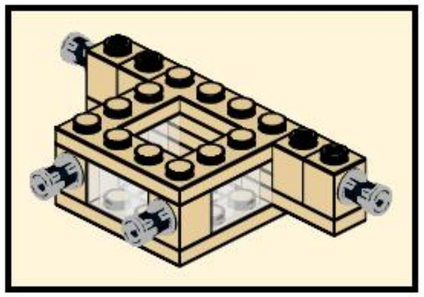

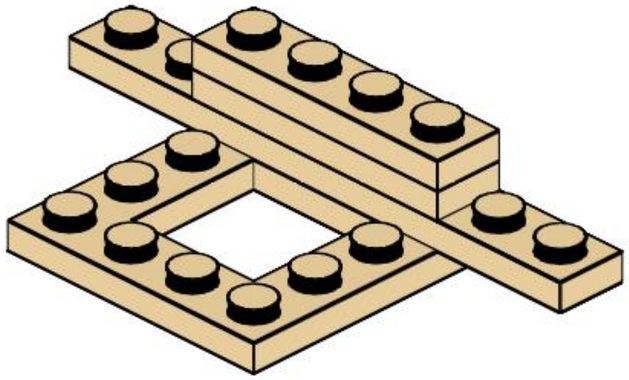

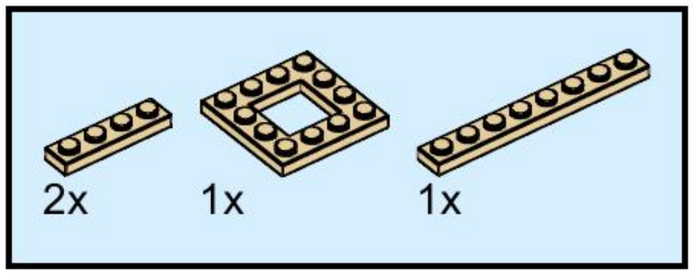

74

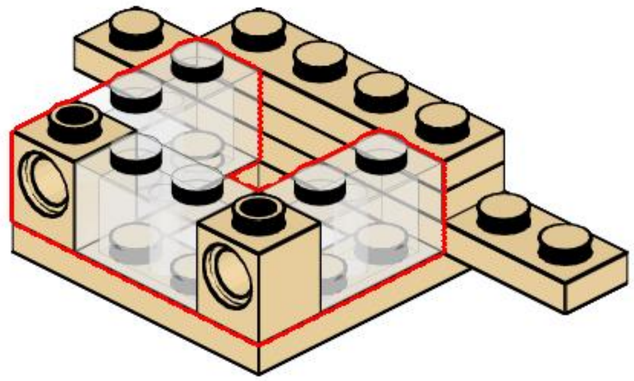

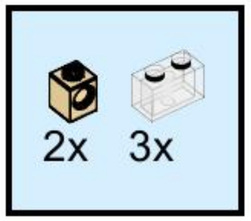

75

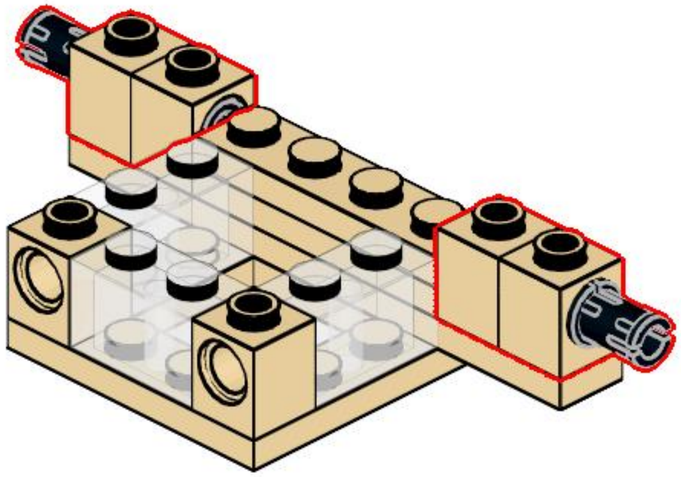

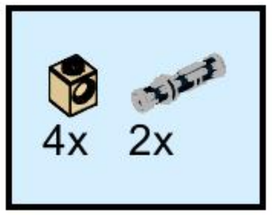

76

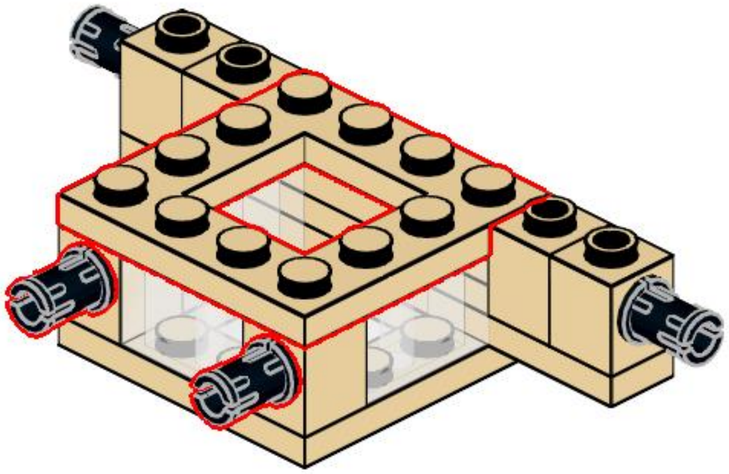

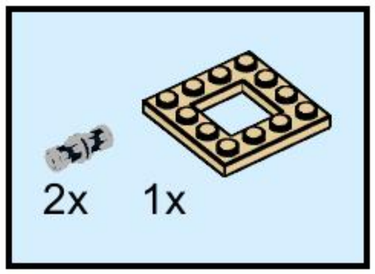

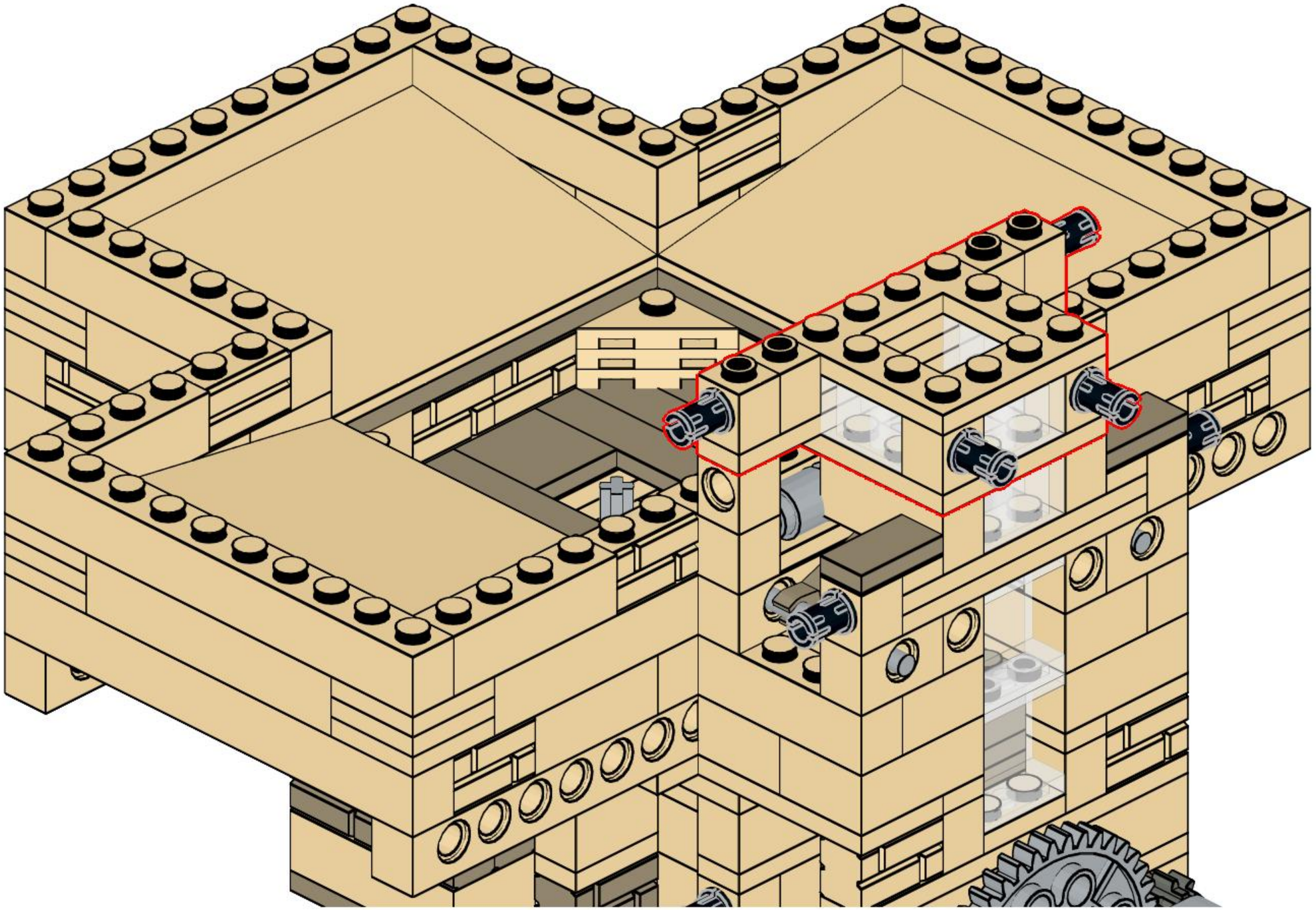

78

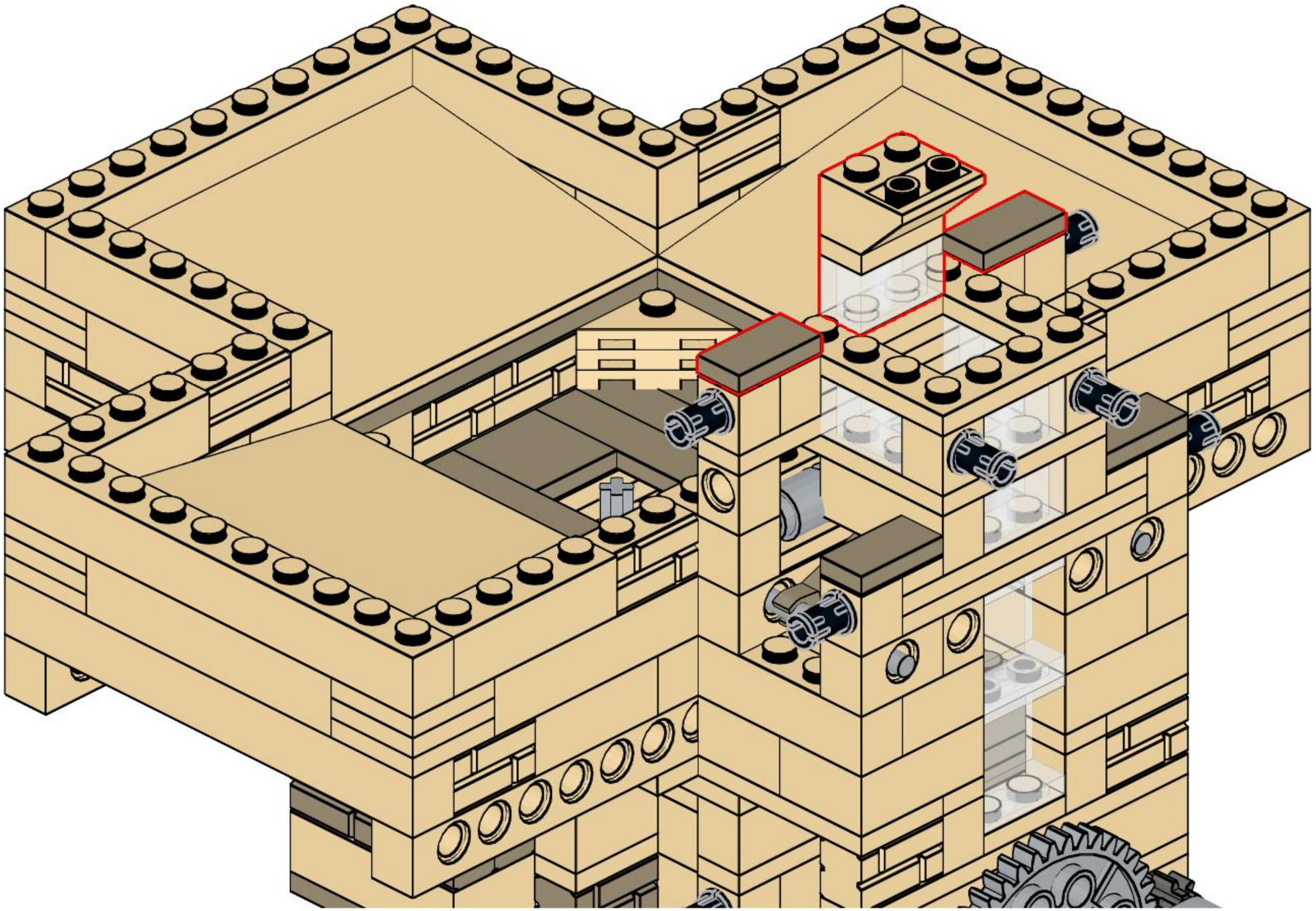

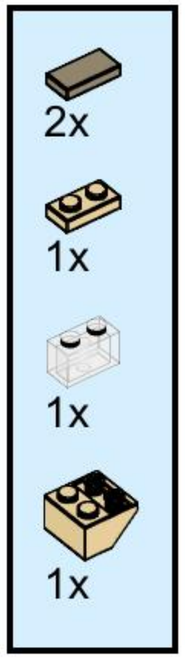

79

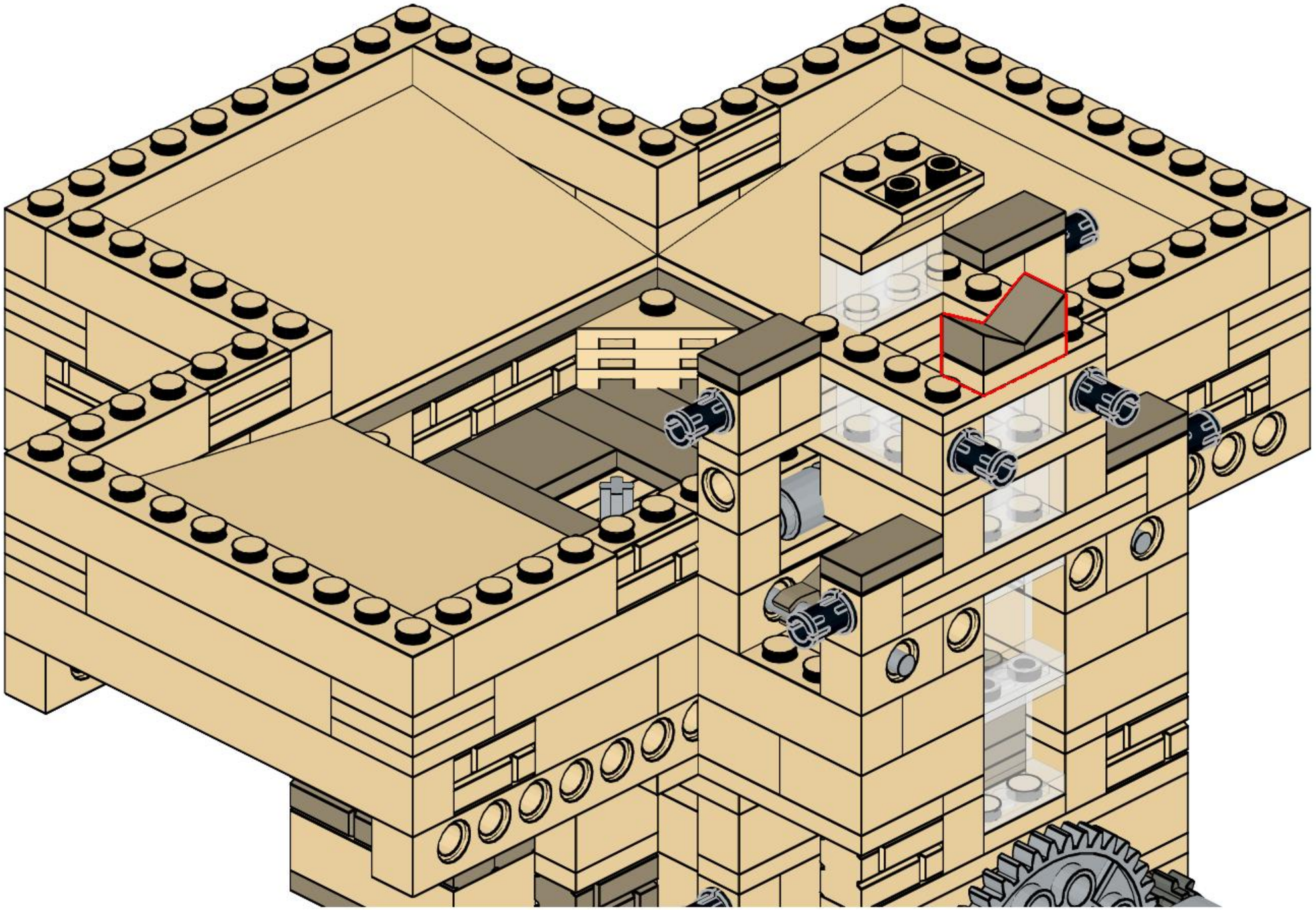

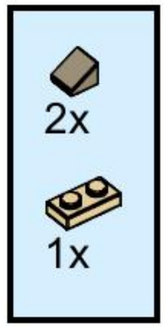

80

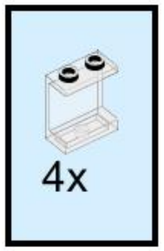

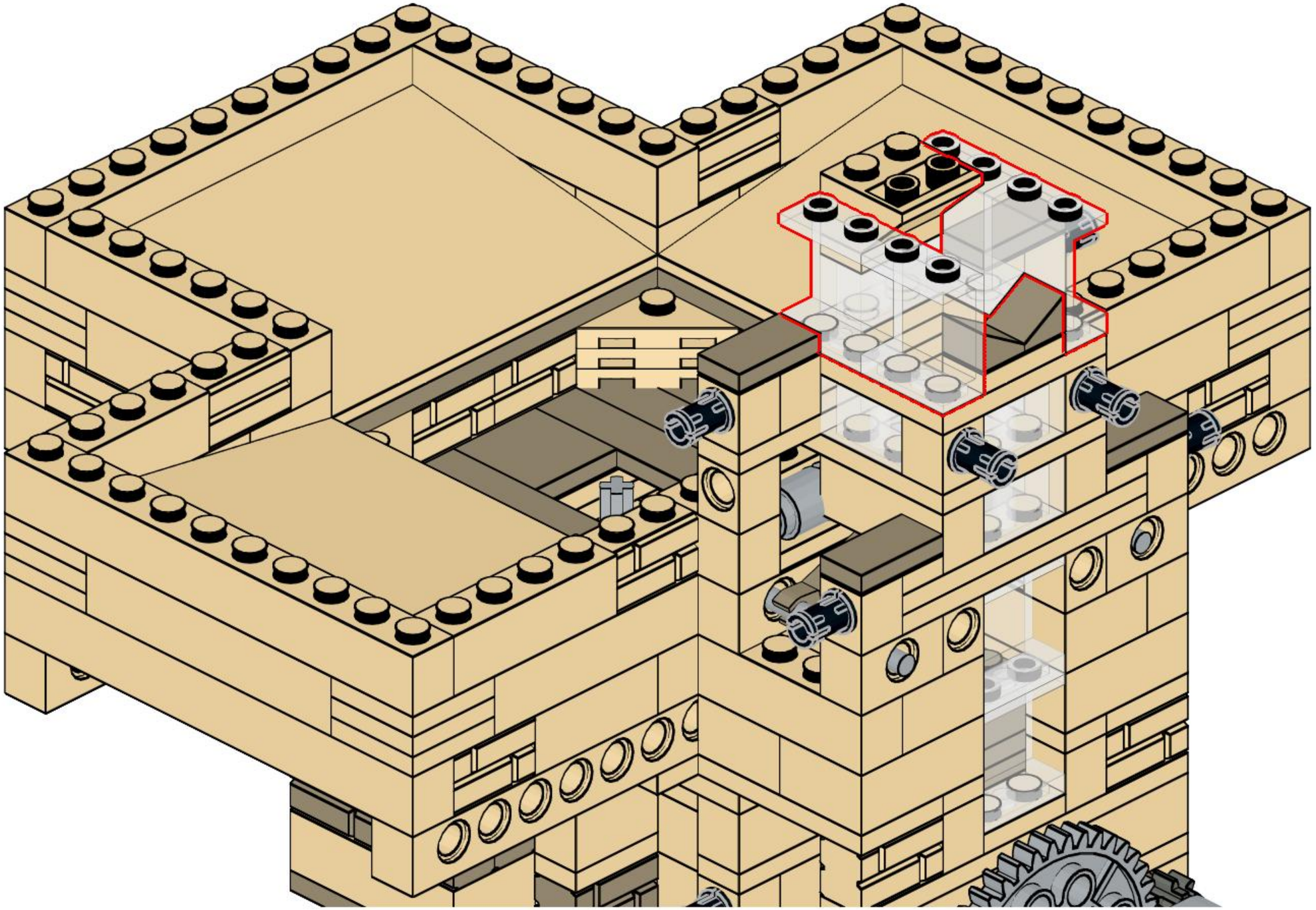

81

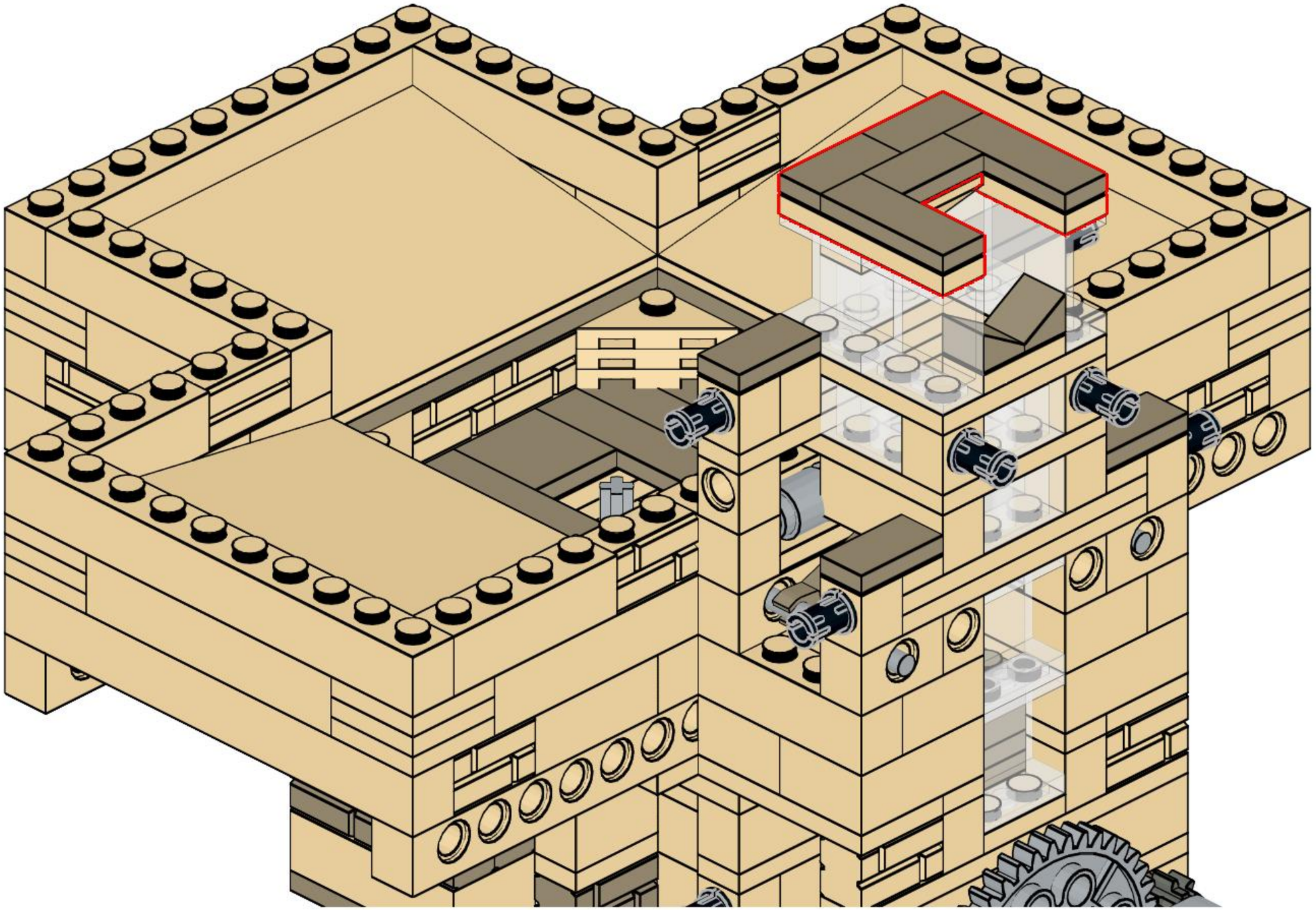

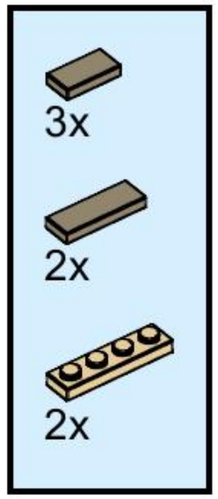

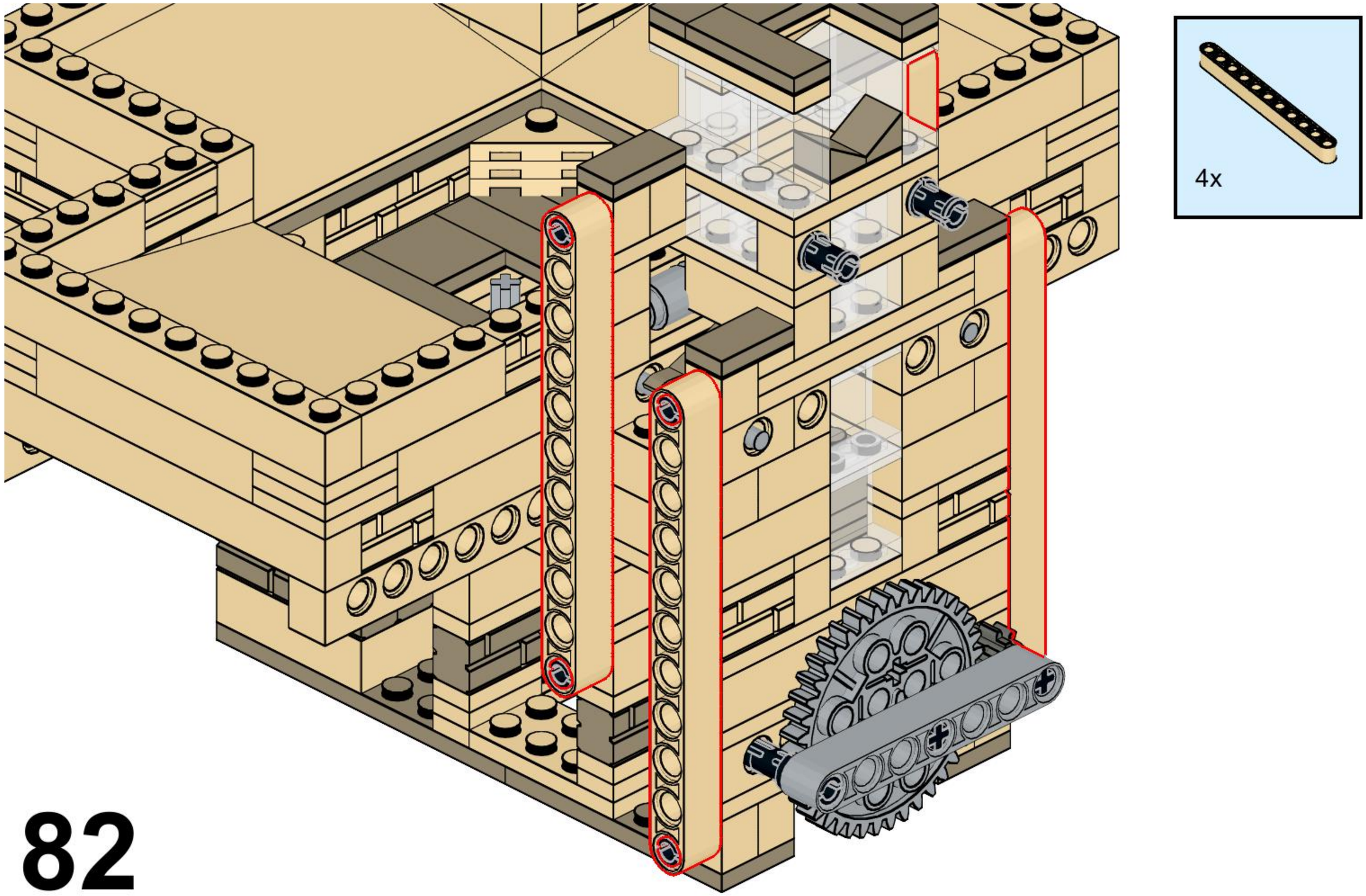
4x

83

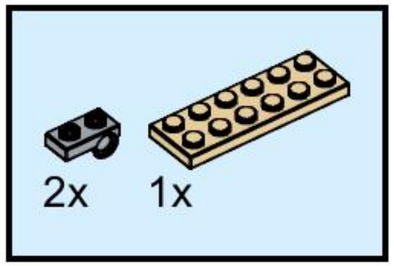

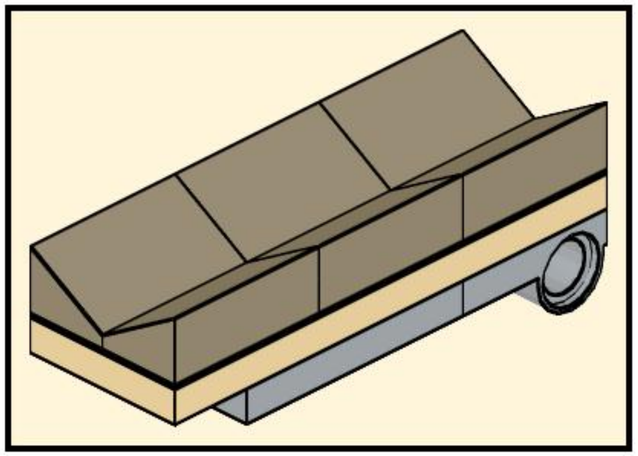

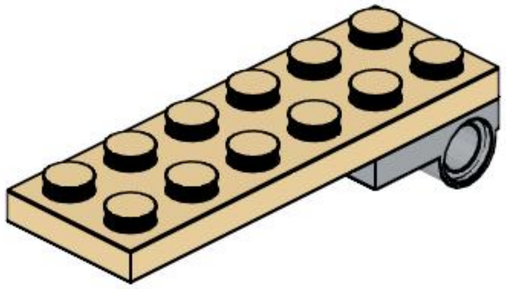

84

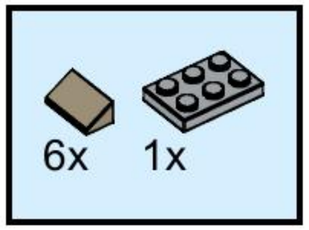

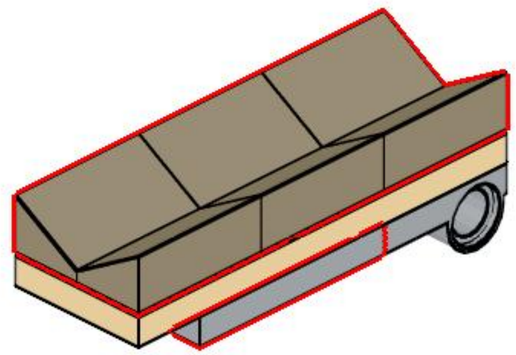

85

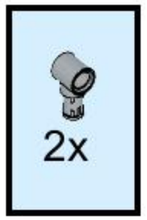

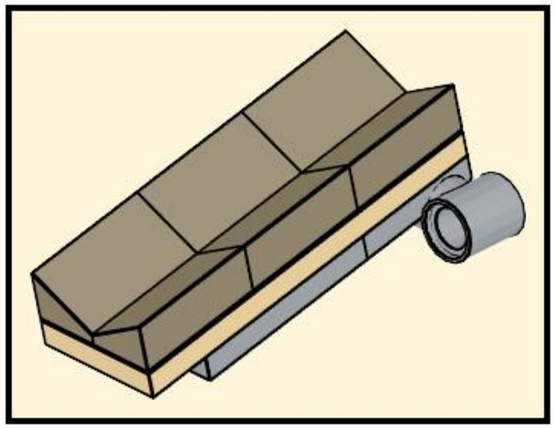

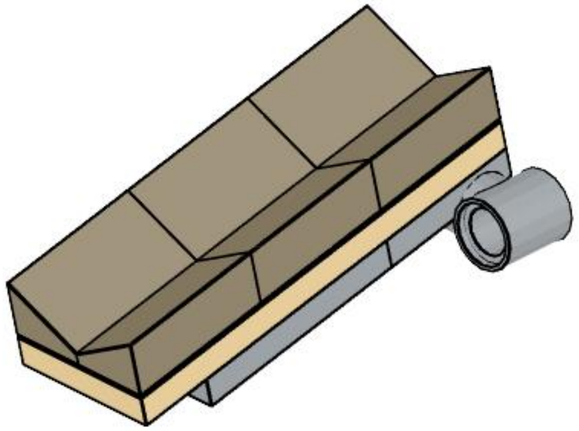

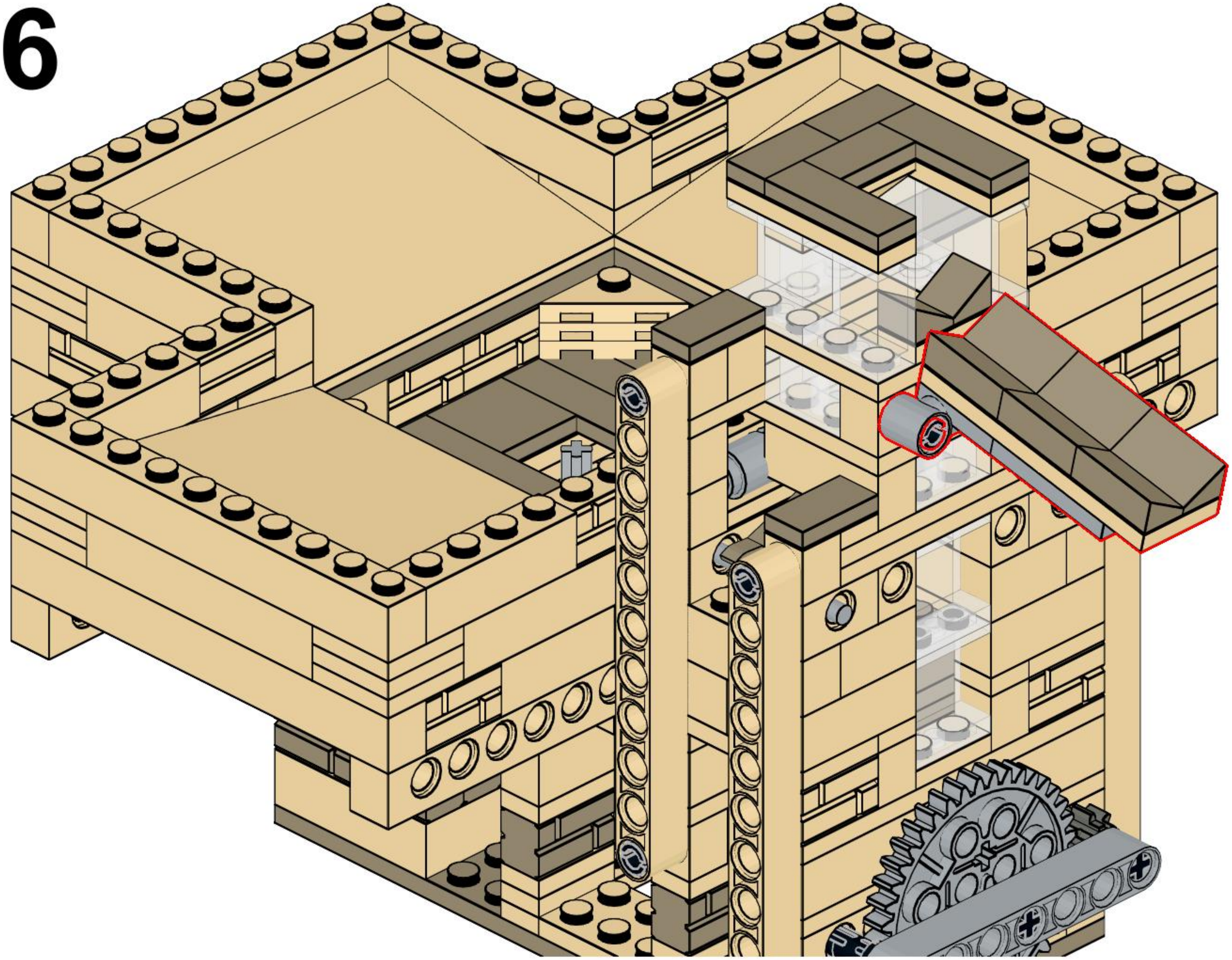

87

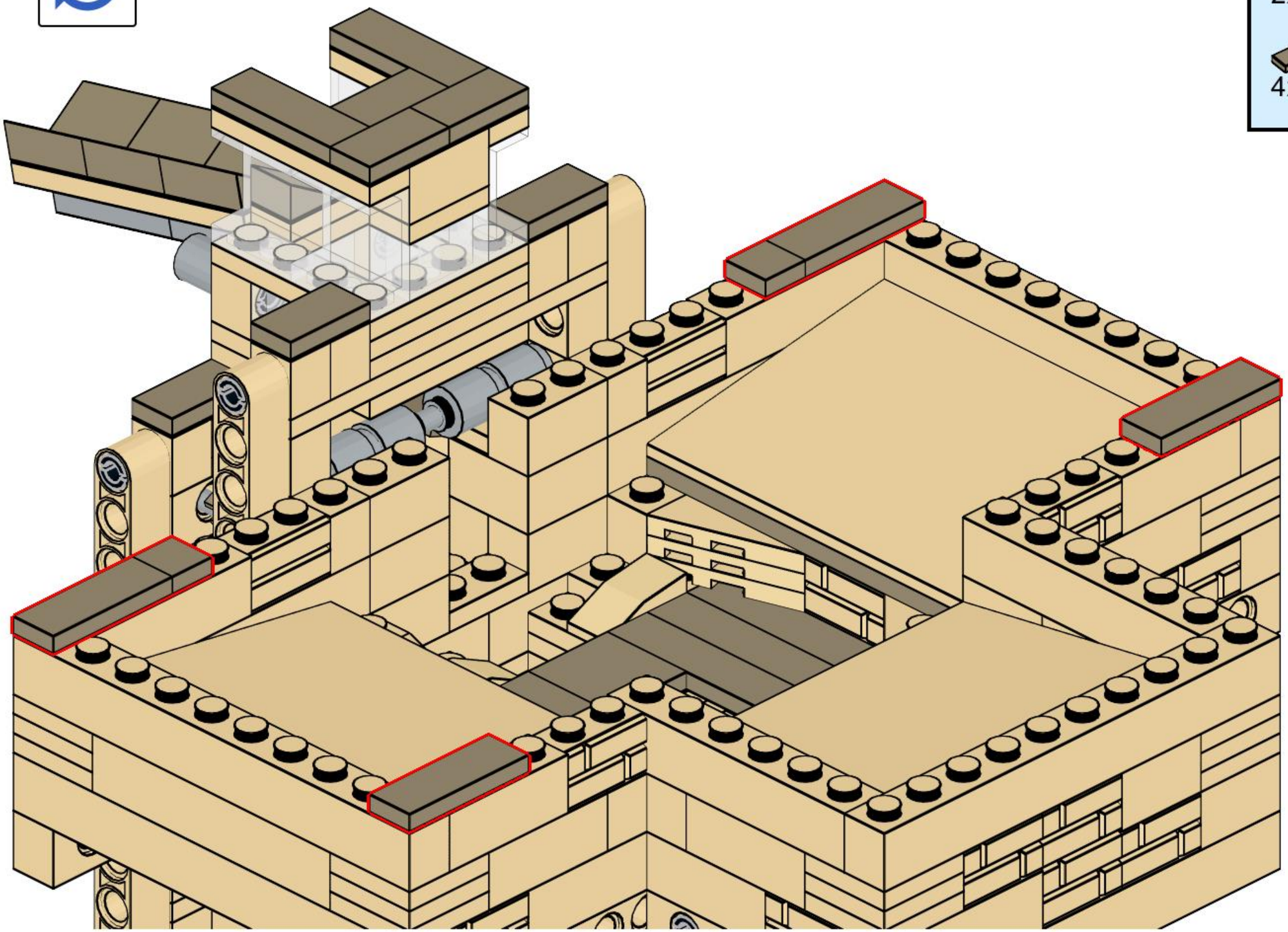

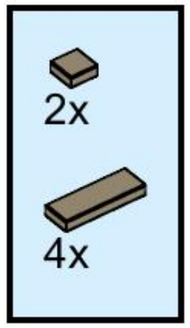

88

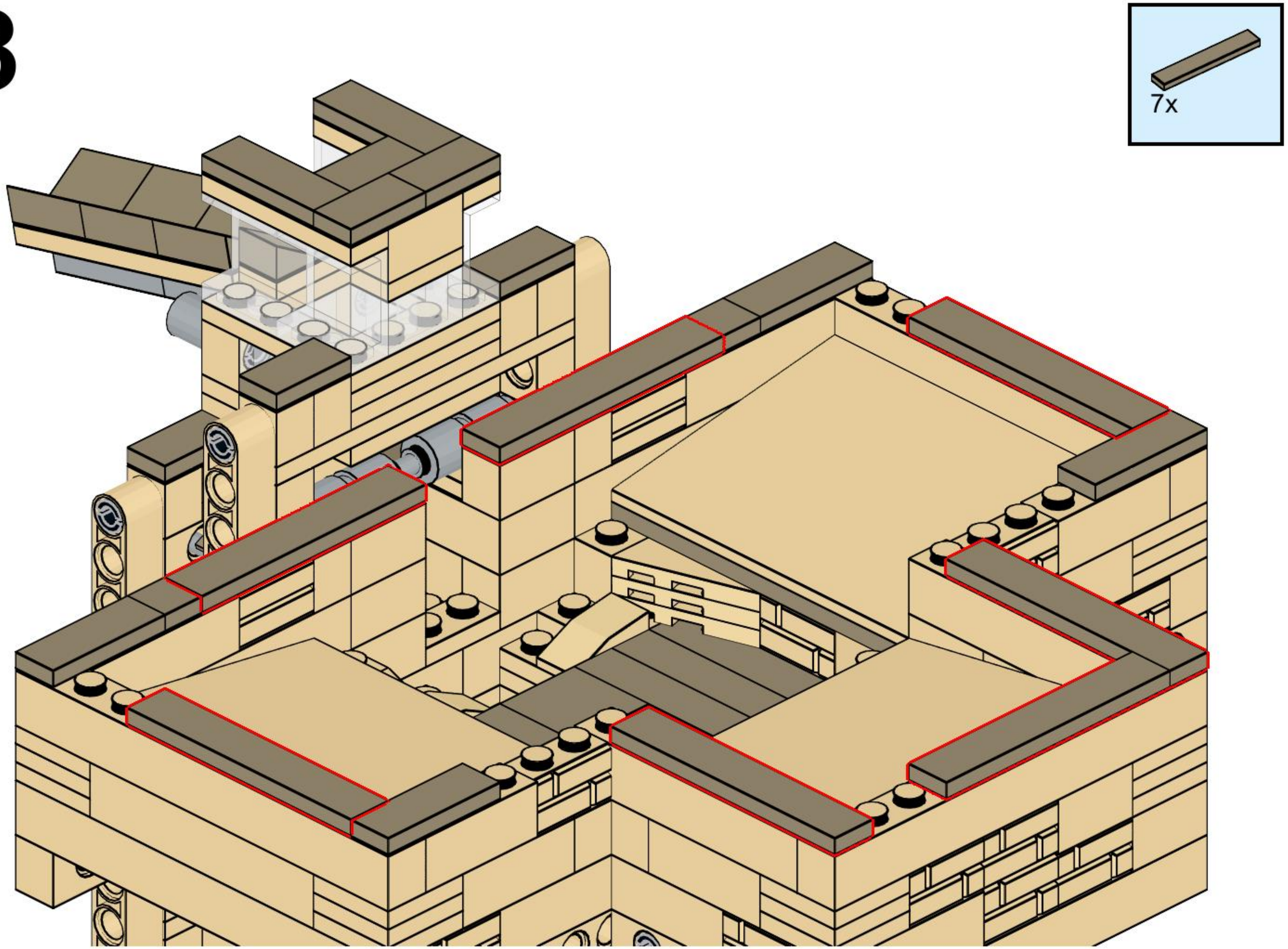

89

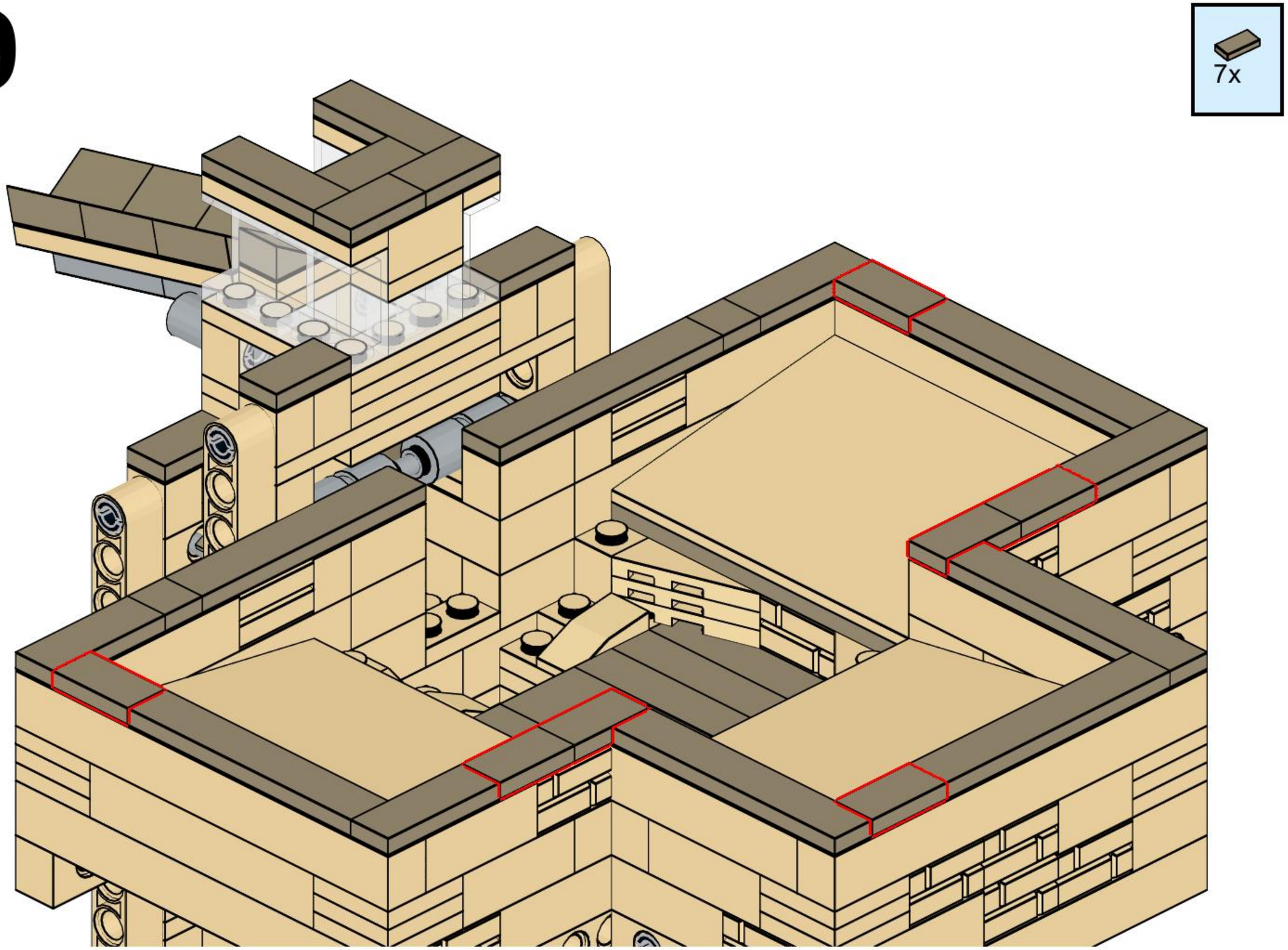

90

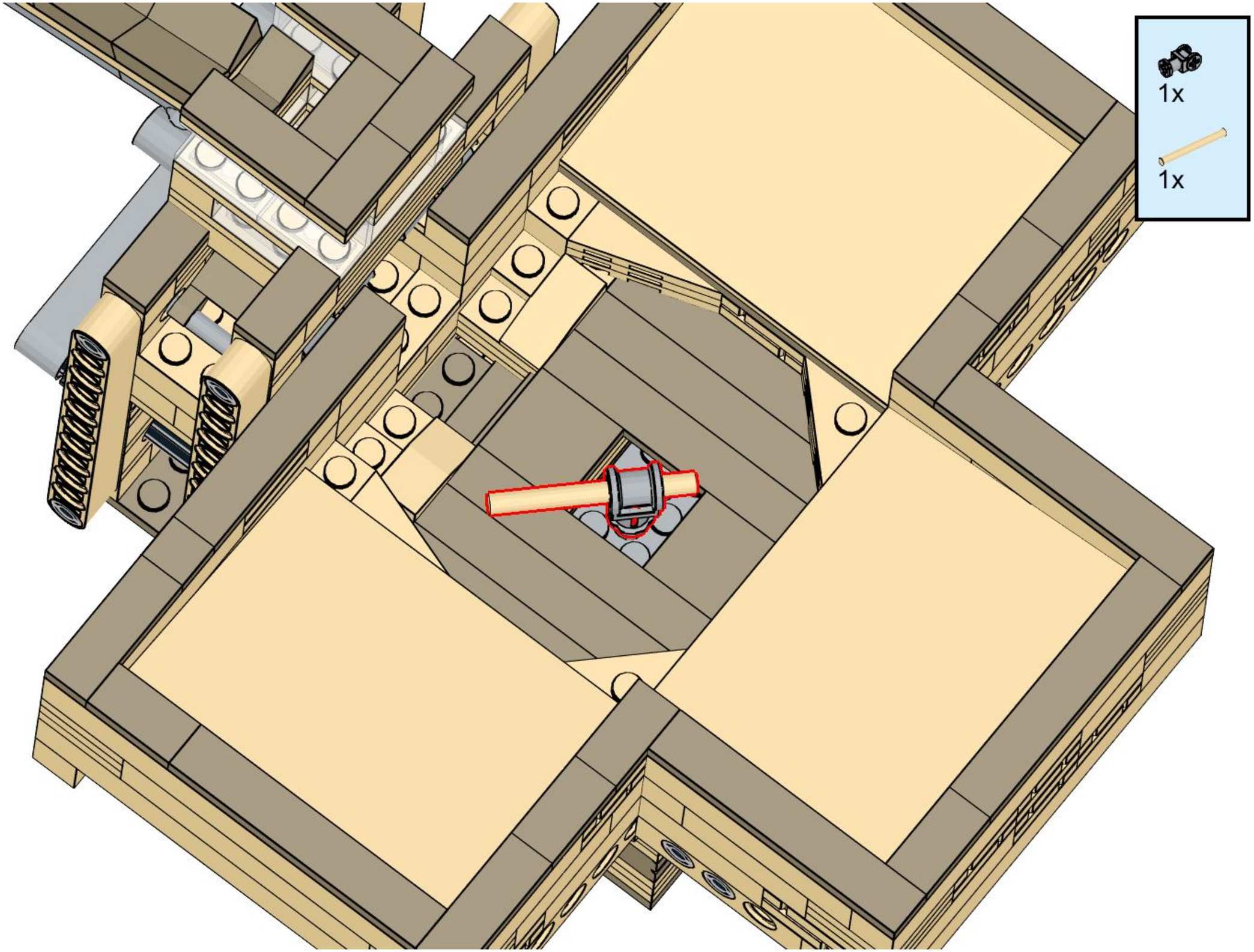

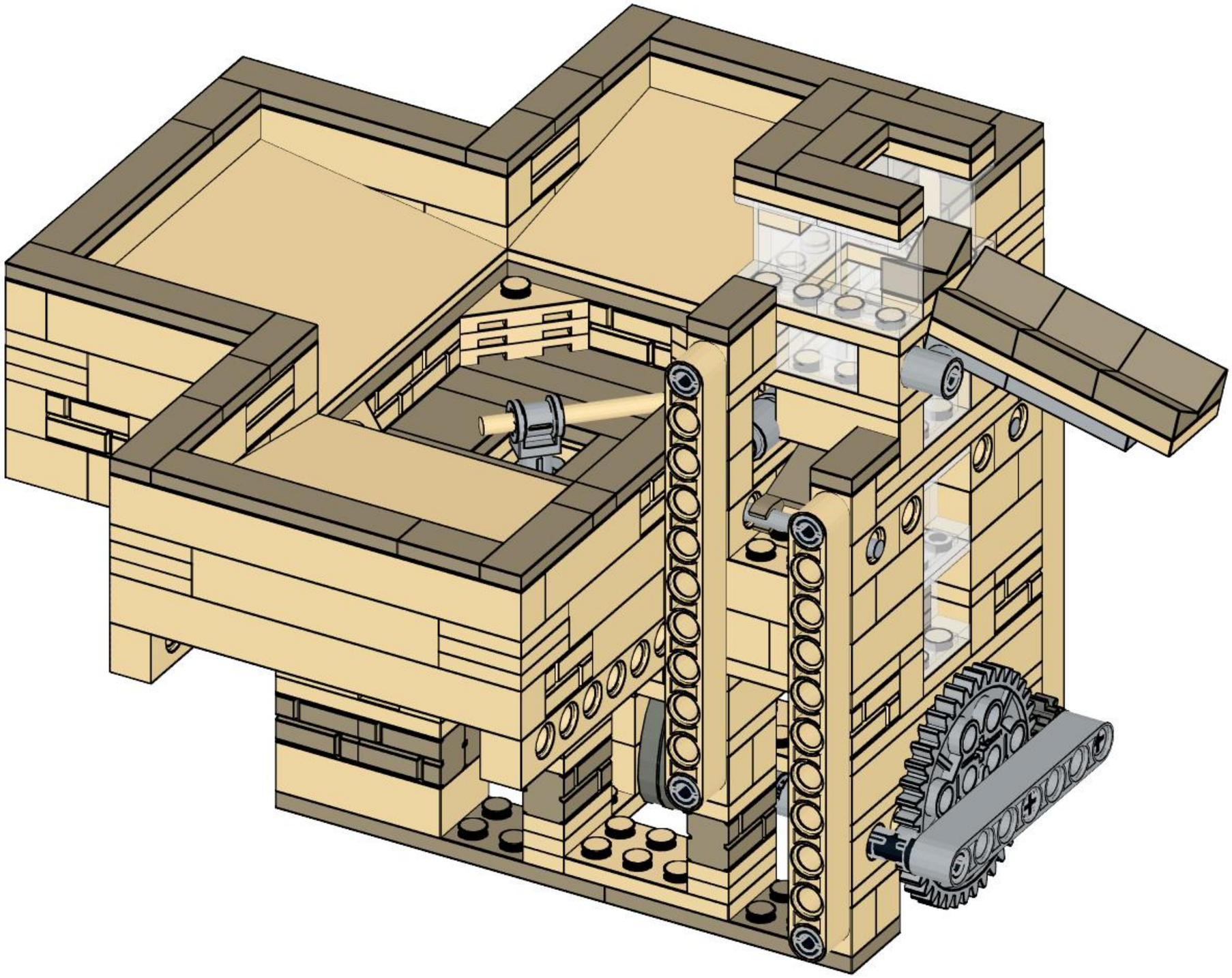

4x
2780, 11

11x
6558, 11

2x
3705, 11

2x
32072, 11

1x
3706, 11

1x
3737, 11

1x
10928, 85

4x
6575, 85

2x
4265c, 86

4x
3062b, 86

2x
3673, 86

1x
62462, 86

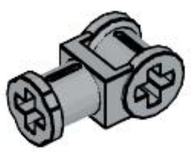

1x
32039, 86

2x
15100, 86

2x
18677, 86

1x
3021, 86

3x
30374, 86

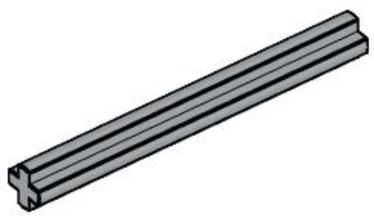

1x
32073, 86

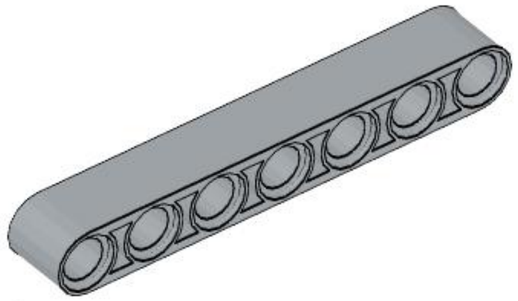

1x
32524, 86

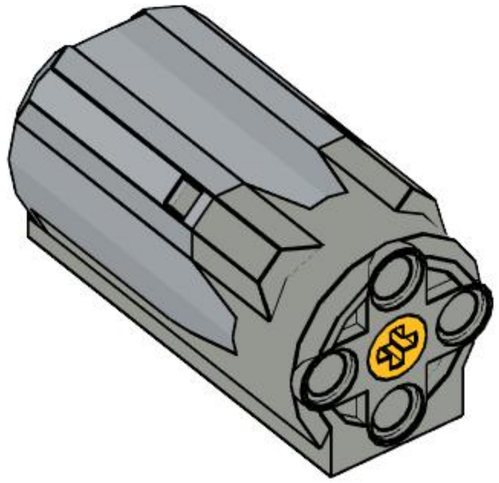

1x
58120c01, 86

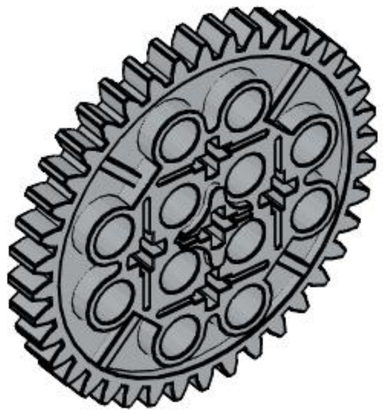

1x
3649, 86

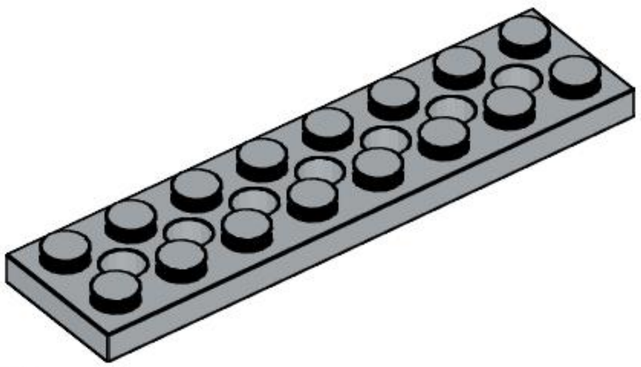

2x
3738, 86

2x
3070b, 69

2x
54200, 69

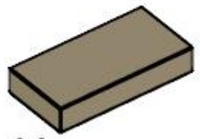

14x
3069b, 69

6x
85984, 69

1x
4865, 69

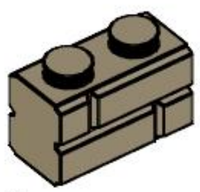

7x
98283, 69

2x
3068b, 69

3x
3022, 69

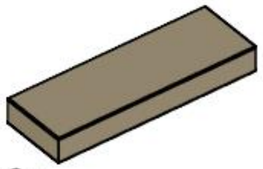

6x
63864, 69

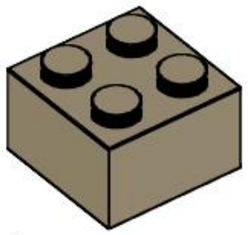

1x
3003, 69

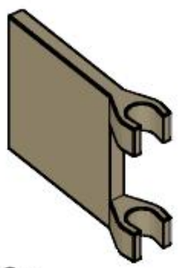

2x
2335, 69

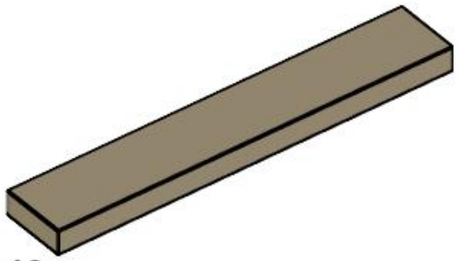

13x
6636, 69

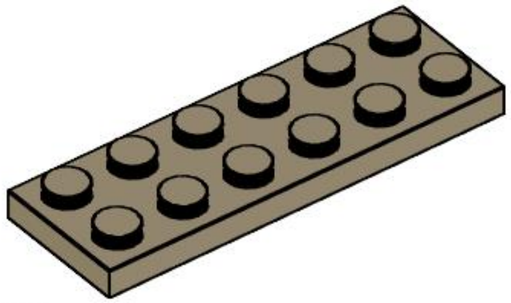

2x
3795, 69

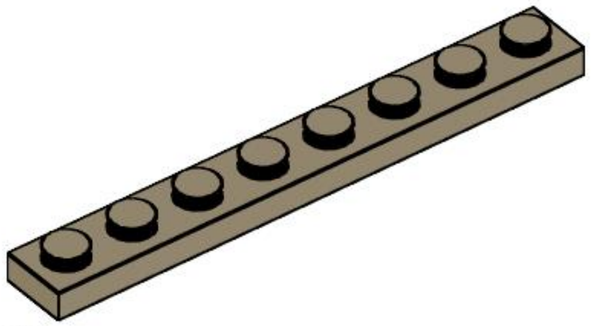

3x
3460, 69

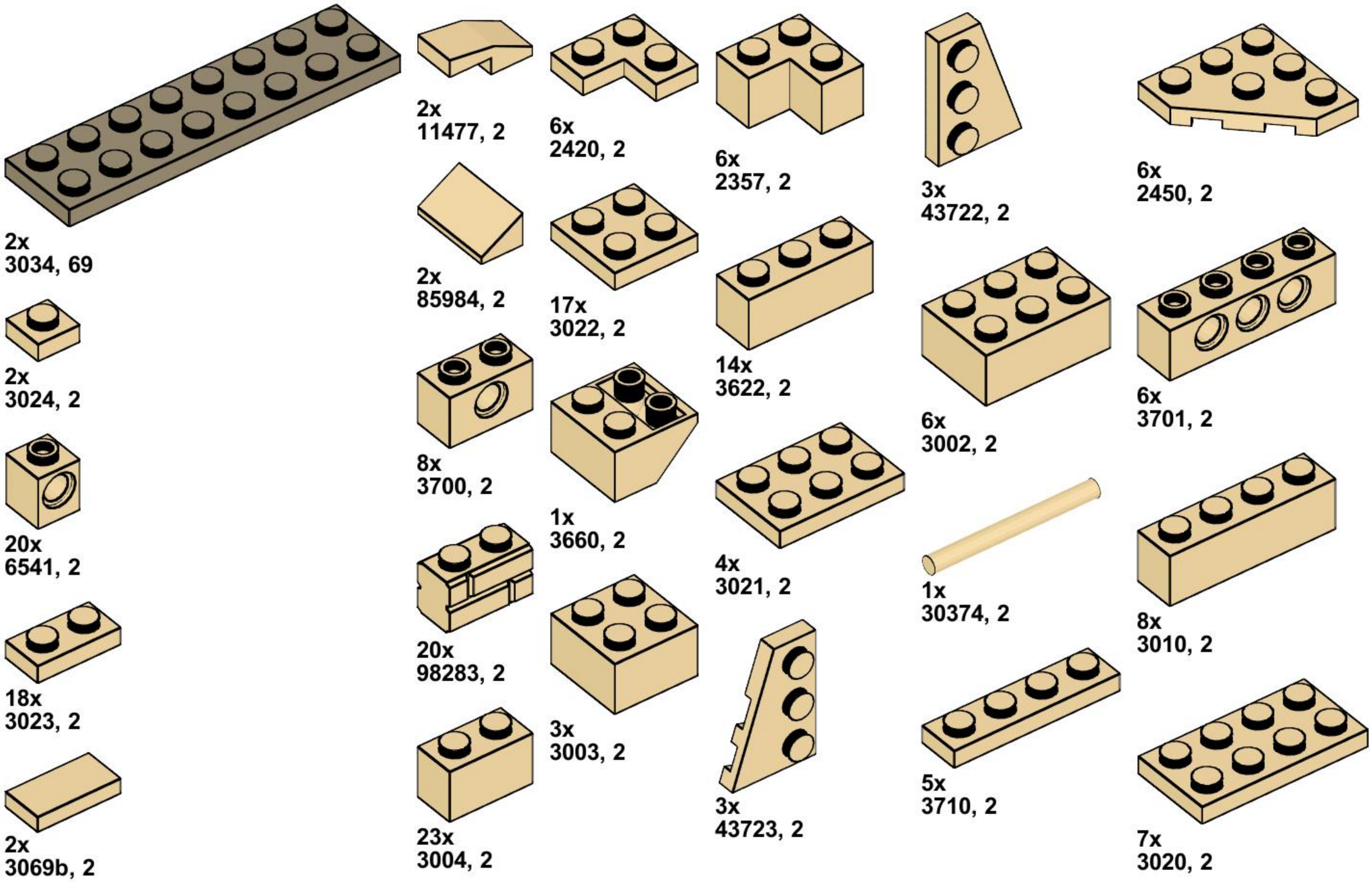
2x
3034, 69
2x
3024, 2
20x
6541, 2
18x
3023, 2
2x
3069b, 2
2x
11477, 2
2x
85984, 2
8x
3700, 2
20x
98283, 2
23x
3004, 2
6x
2420, 2
17x
3022, 2
1x
3660, 2
3x
3003, 2
6x
2357, 2
14x
3622, 2
4x
3021, 2
3x
43723, 2
3x
43722, 2
6x
3002, 2
1x
30374, 2
5x
3710, 2
6x
2450, 2
6x
3701, 2
8x
3010, 2
7x
3020, 2

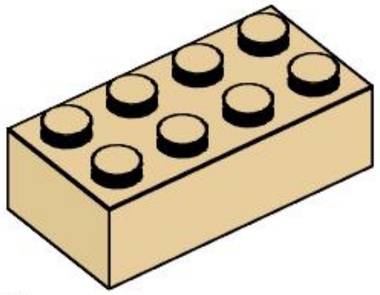

3x
3001, 2

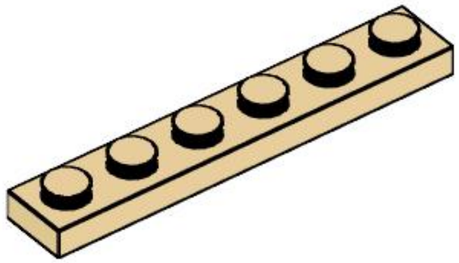

2x
3666, 2

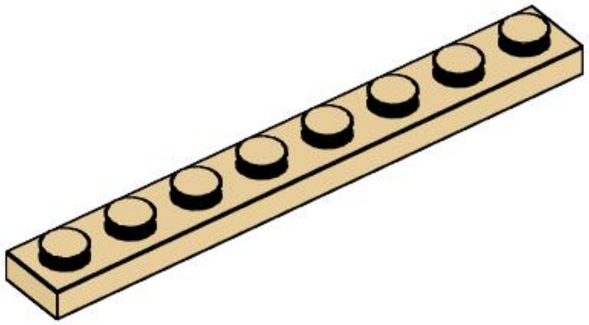

9x
3460, 2

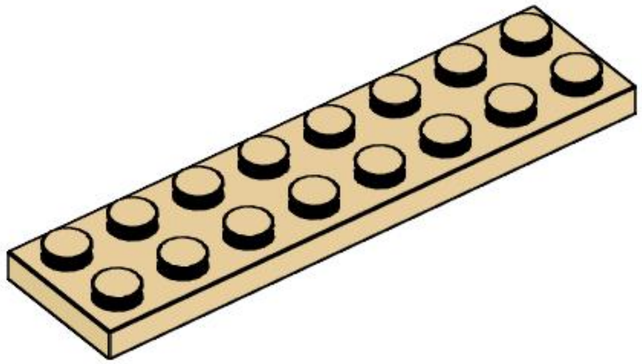

5x
3034, 2

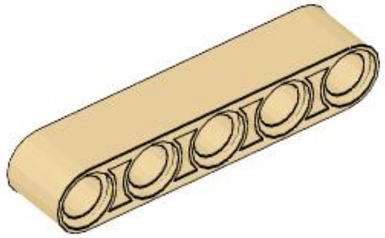

2x
32316, 2

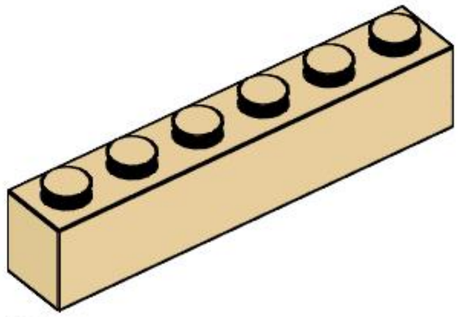

6x
3009, 2

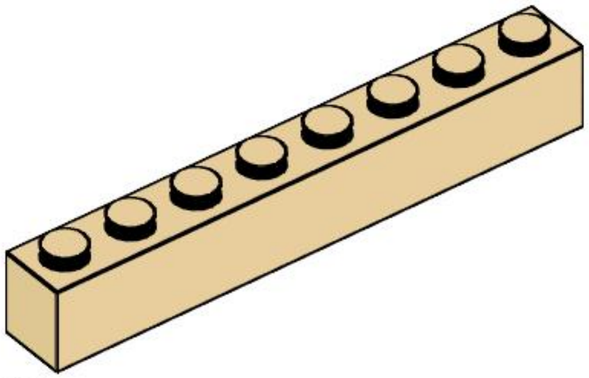

4x
3008, 2

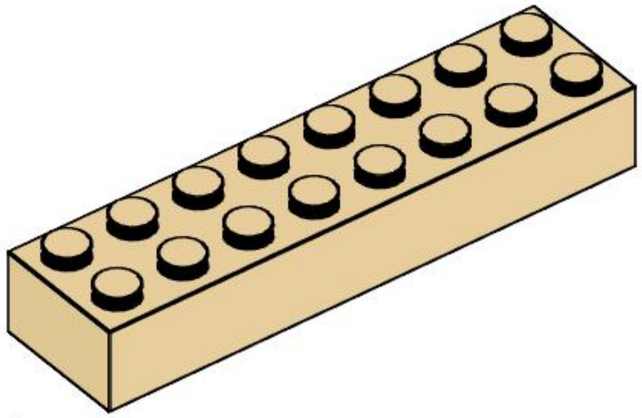

1x
3007, 2

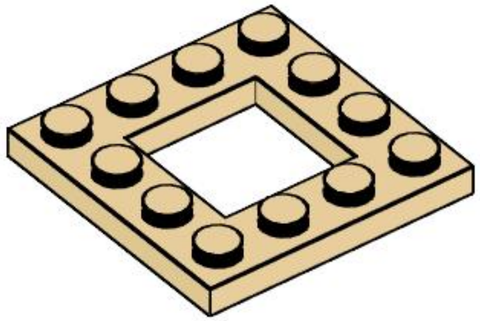

2x
64799, 2

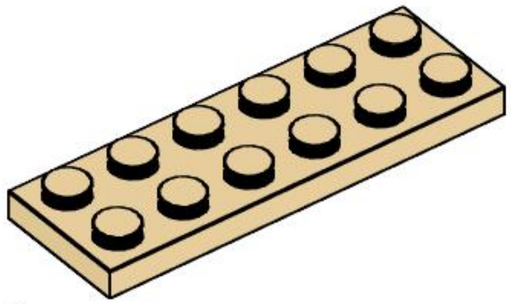

1x
3795, 2

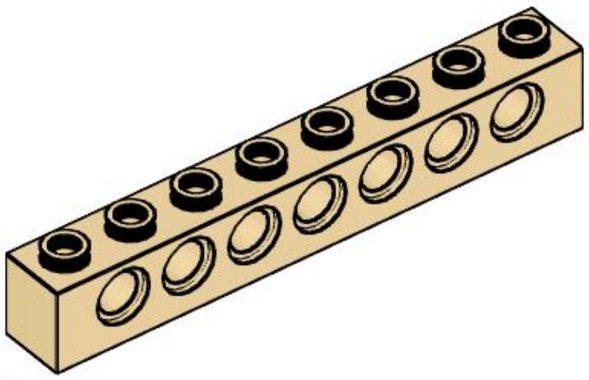

5x
3702, 2

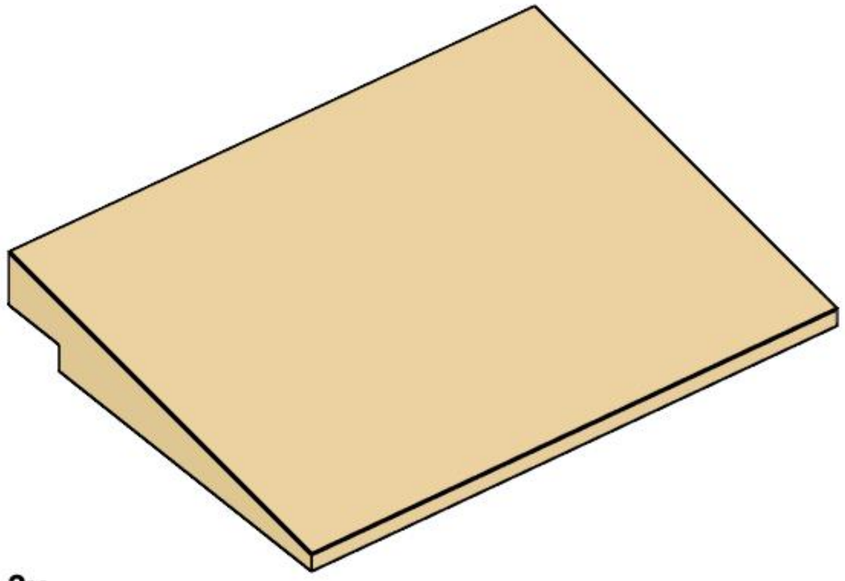

3x
4515, 2

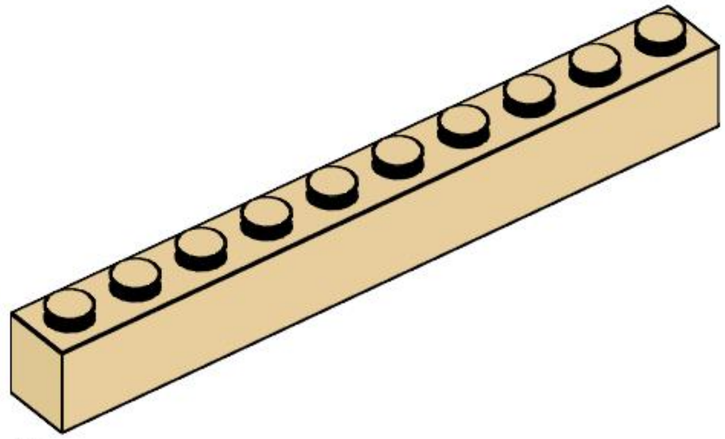

5x
6111, 2

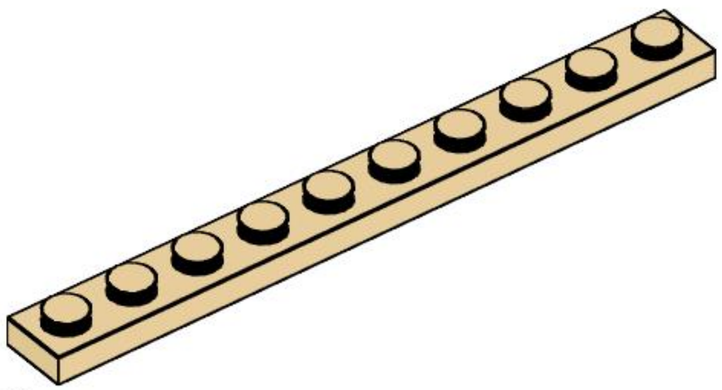

2x
4477, 2

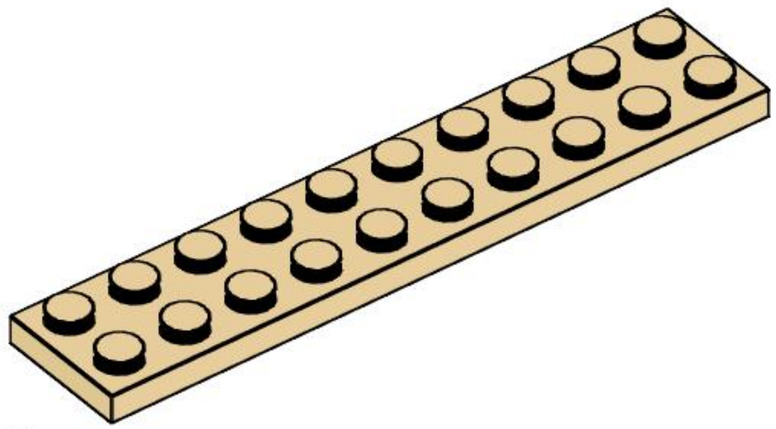

2x
3832, 2

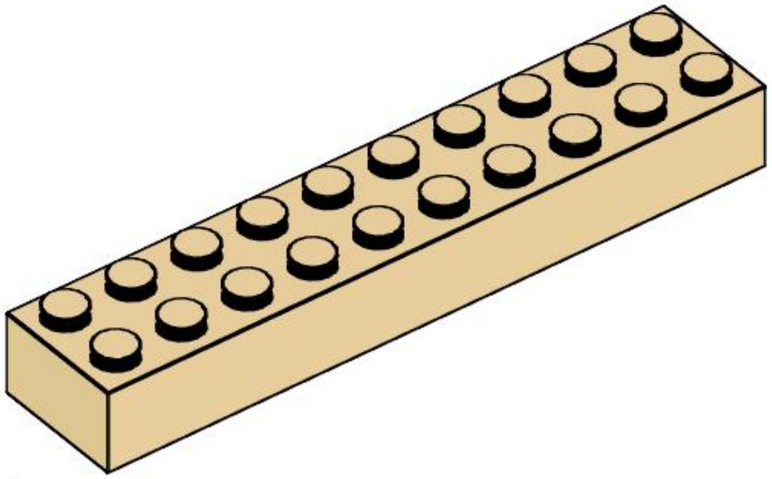

1x
3006, 2

6x
4864b, 12

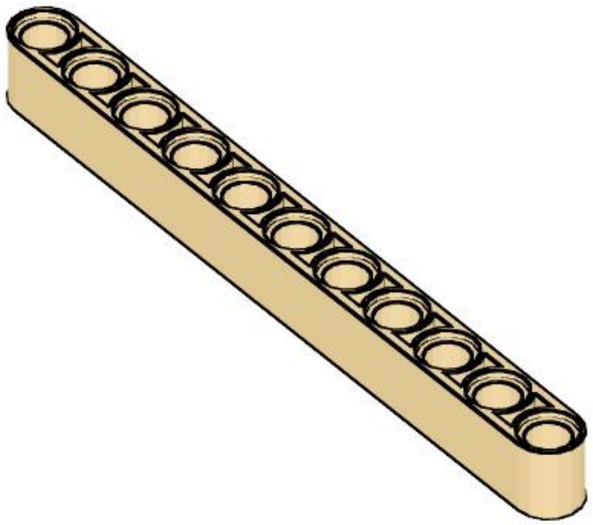

4x
32525, 2

5x
3004, 12