# POWER MINERS LIME WHEEL

Version 1.0

Ryk Field
2019

MOD02

The lime wheel mold was used between 2007 and 2009, in Exo-Force and Power Miners sets.  GBCs incorporating the "Lime Wheel" appear to have begun with a circa-2011 module by Maico Arts, with the initial version using the black variant of the mold from a 2009 Bionicle set.

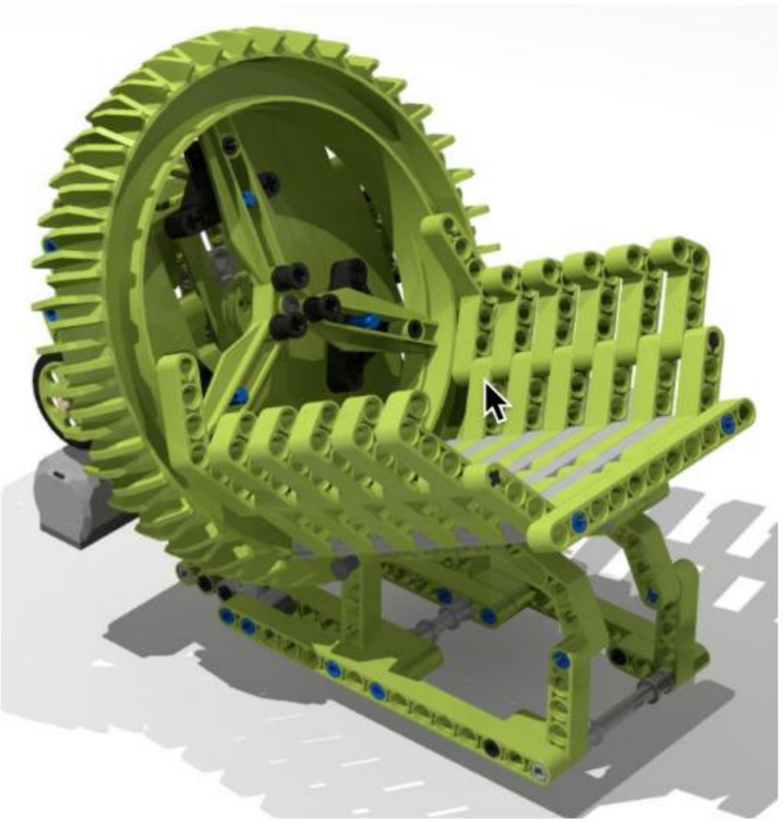

Rohan Beckett created his version of the Lime Wheel after seeing the Maico module online.  'Cadder' built his version after studying Rohan's, when they collaborated together to display at Brickvention in 2019. Cadder subsequently created and shared instructions online.

This Power Miners-themed version of the Lime Wheel is based principally upon Cadder's instructions, with minor changes to the drive gearing and wheel deck.  The Power Miner's theming is based up on the Control Cabin of the 8957 Mine Mech and the Drill from the 8960 Thunder Driller.

# 1

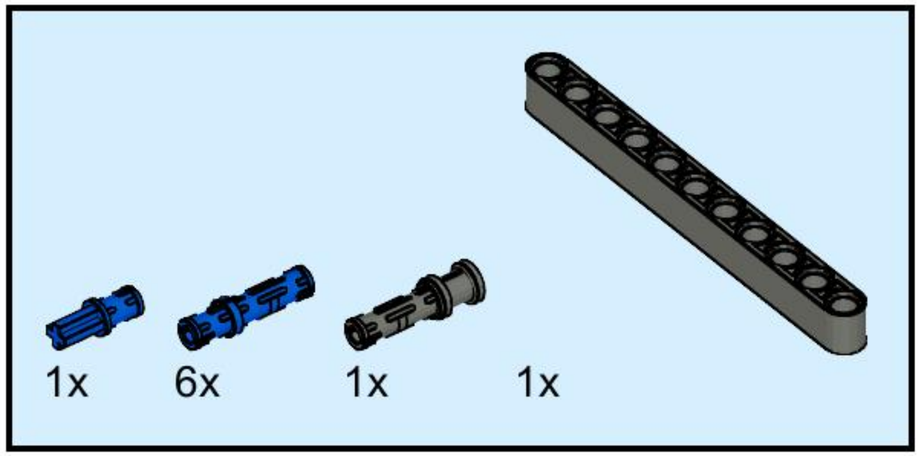


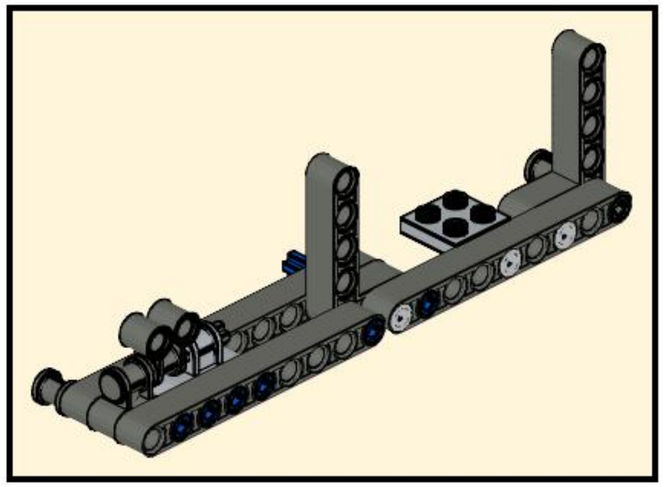

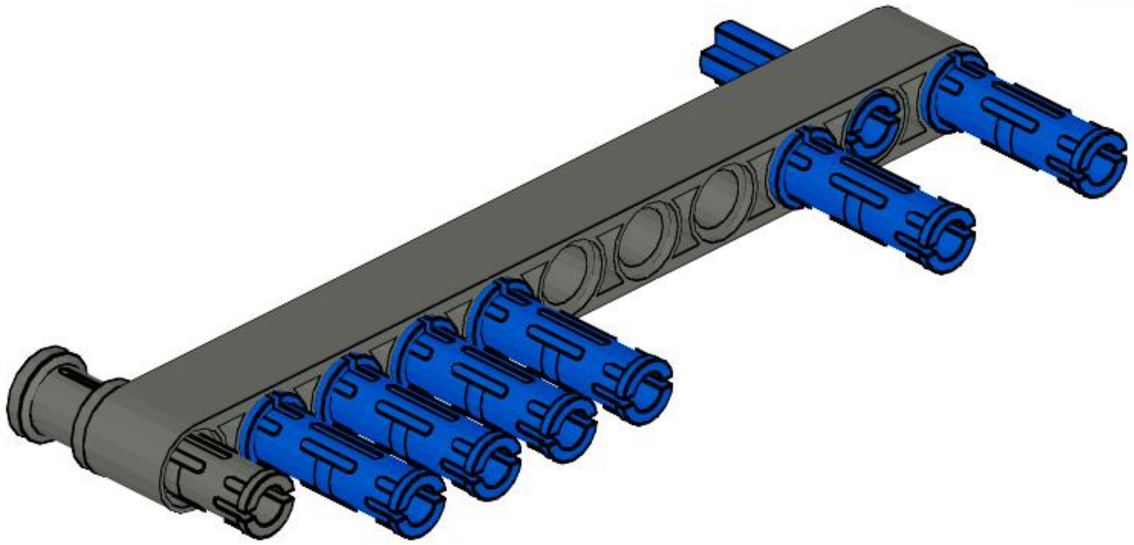

# 2

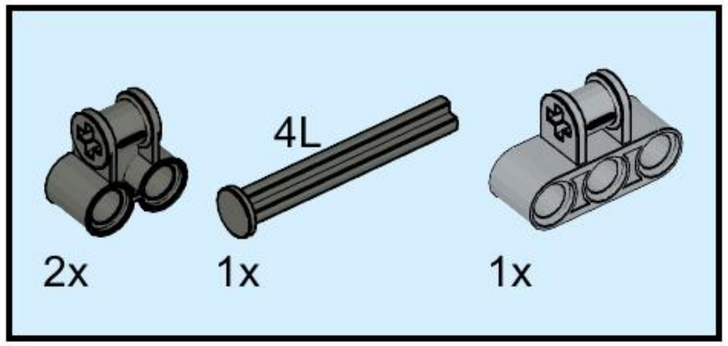


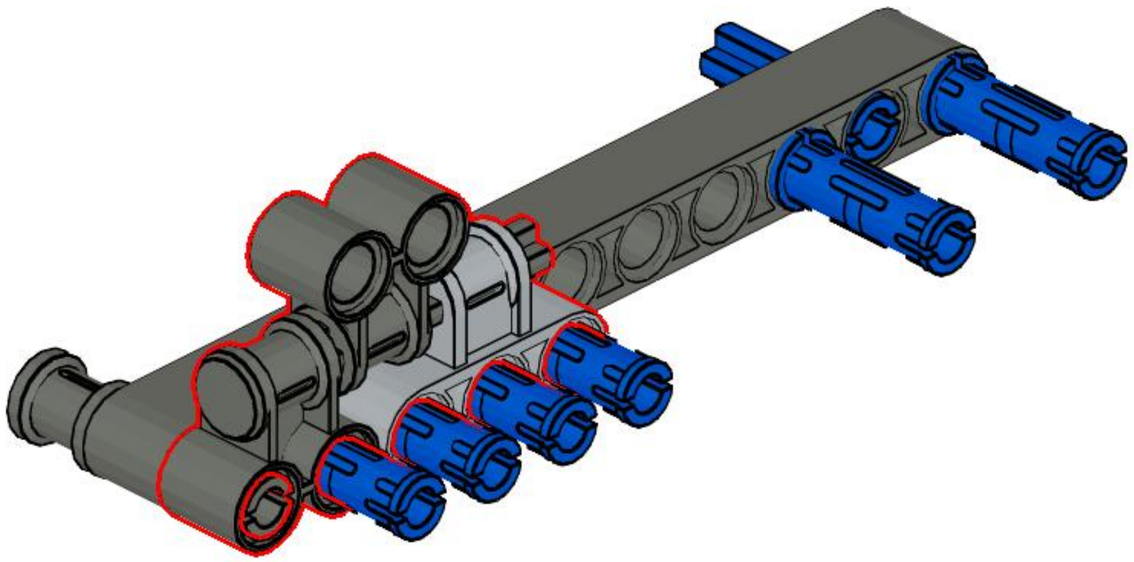

# 3

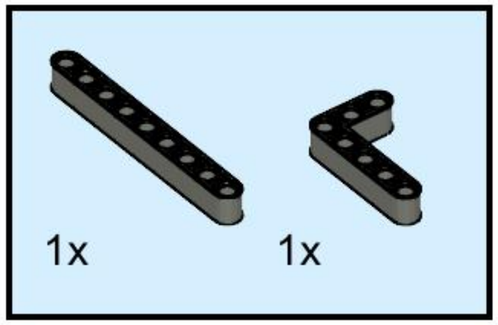


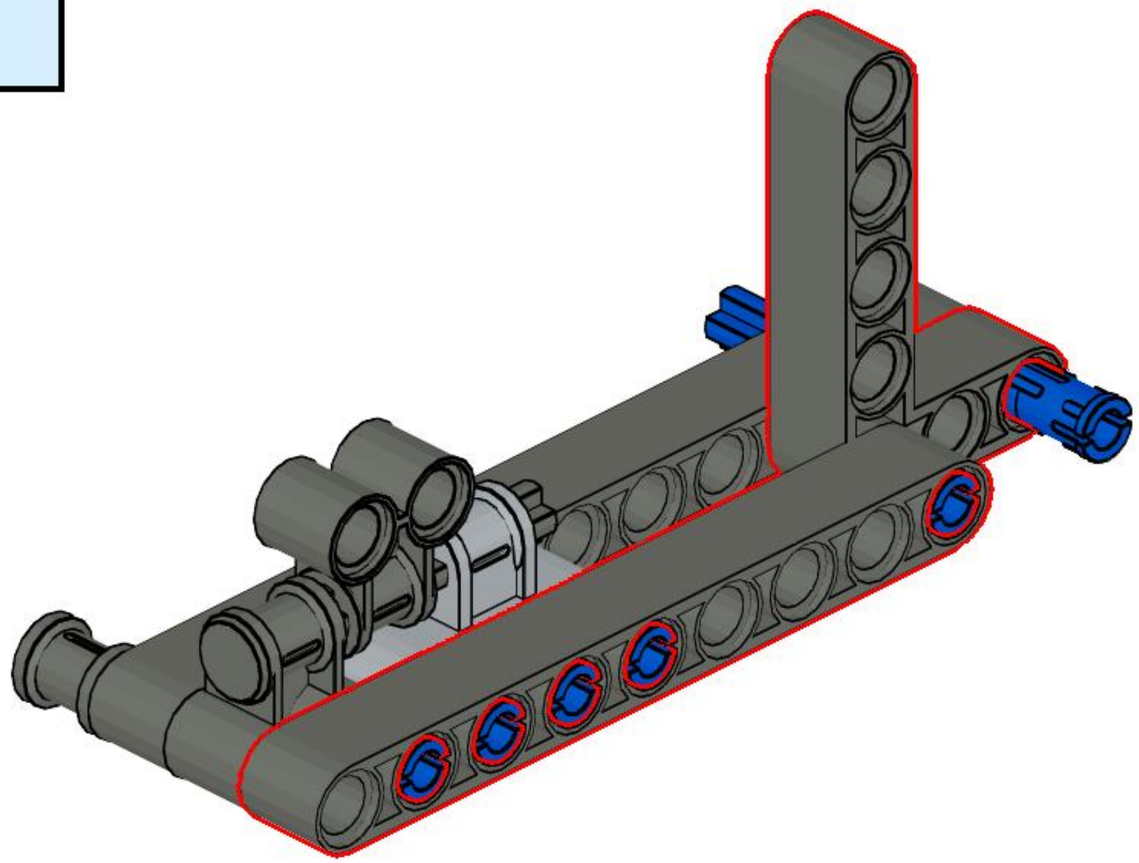

# 4

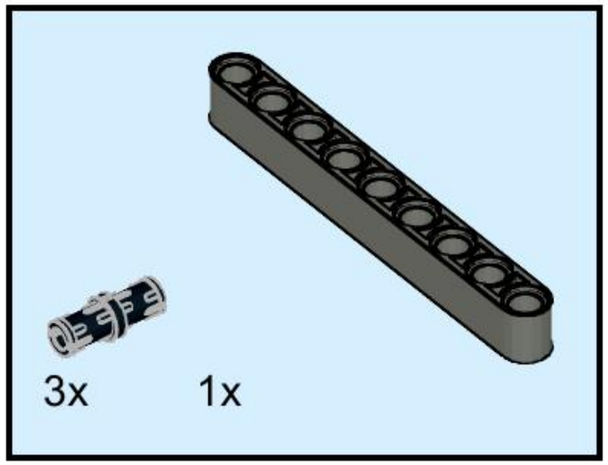


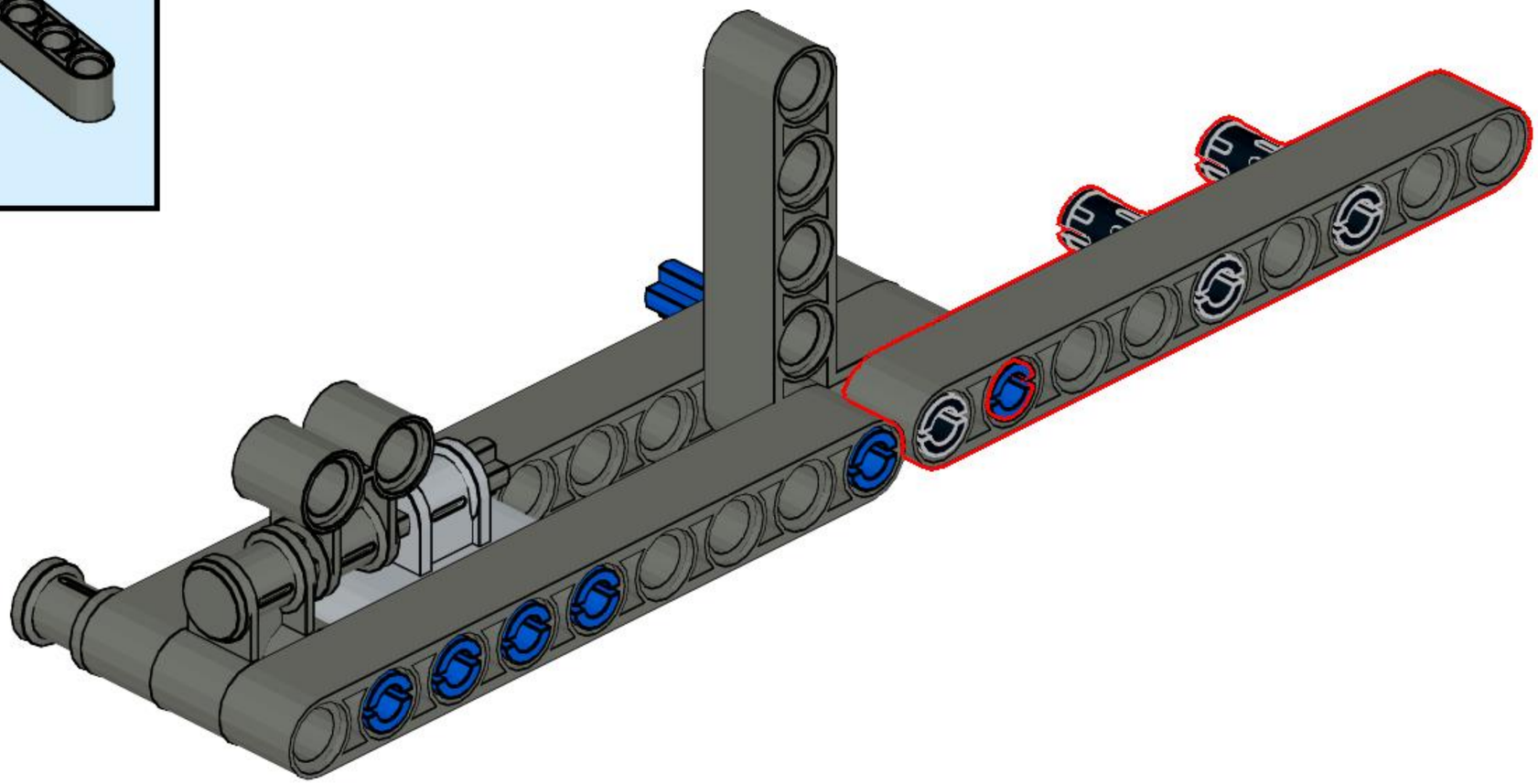

# 5

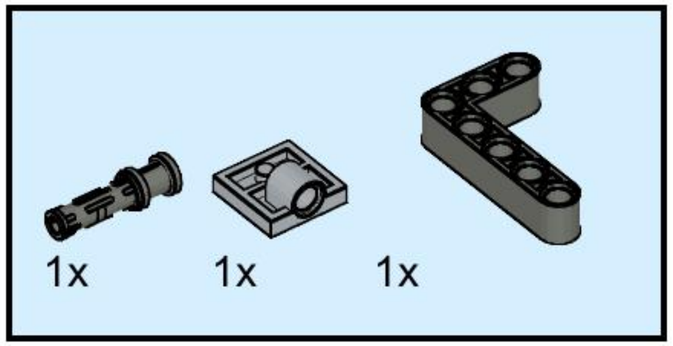


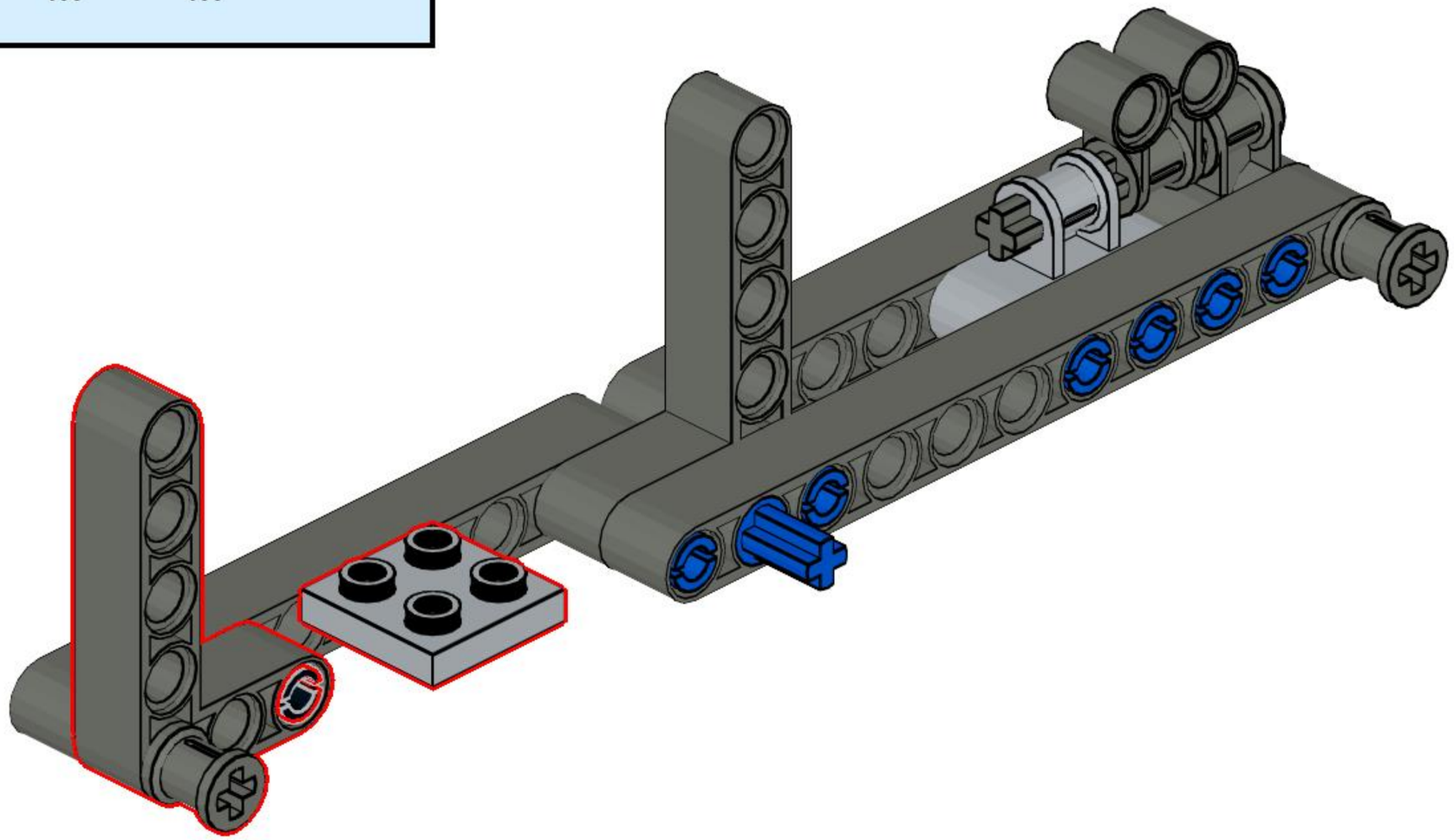

# 6

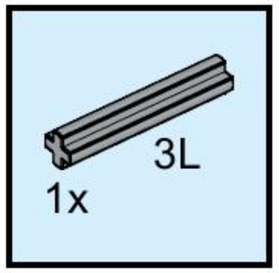


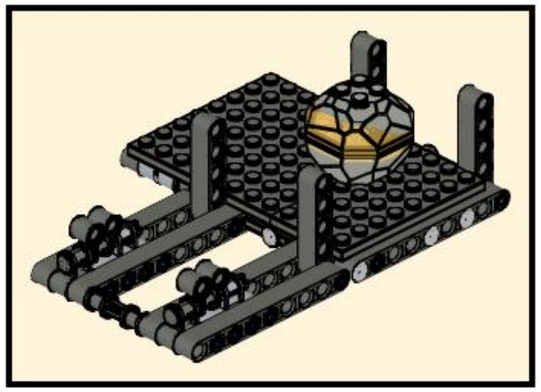

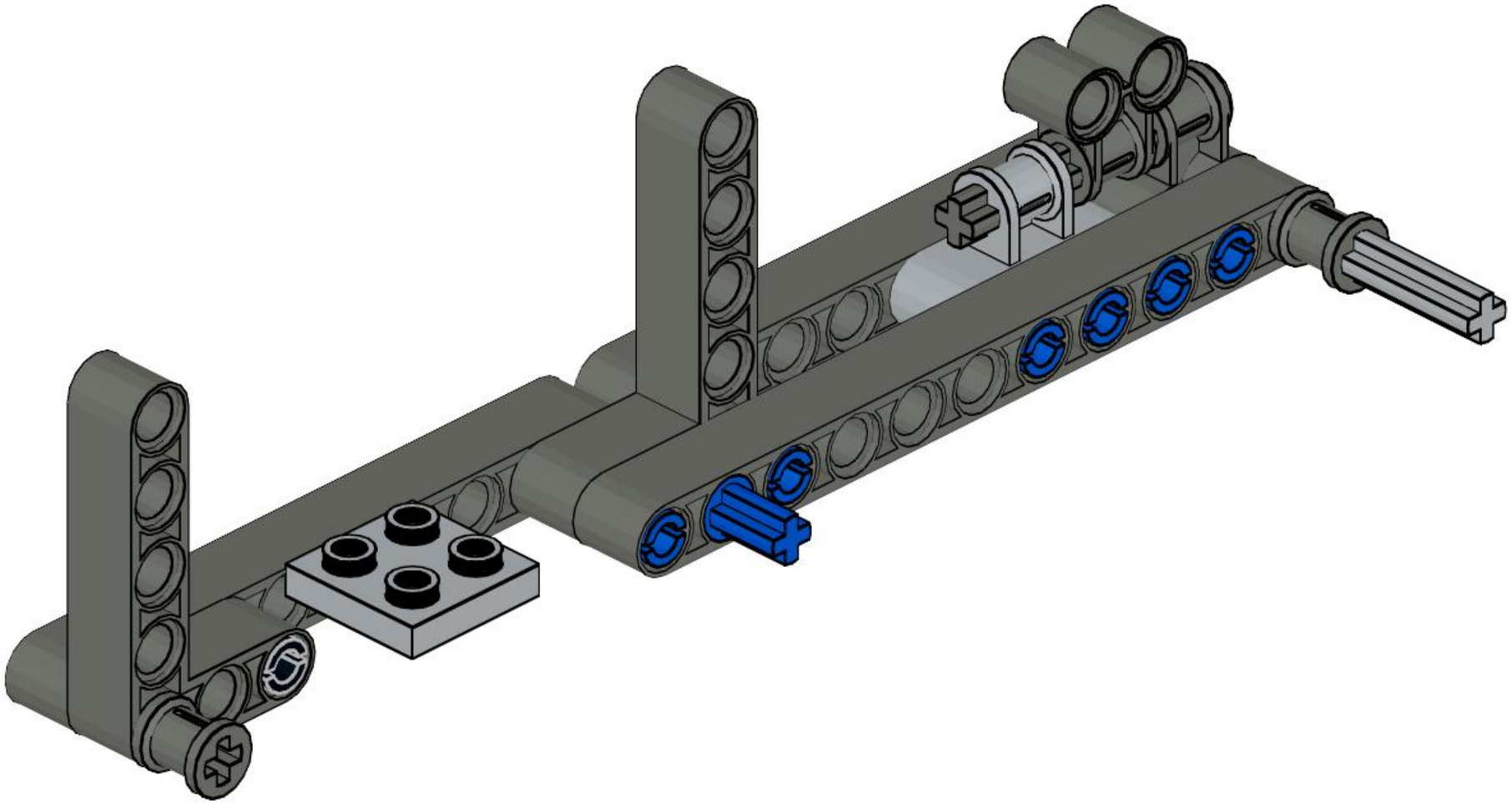

# 7

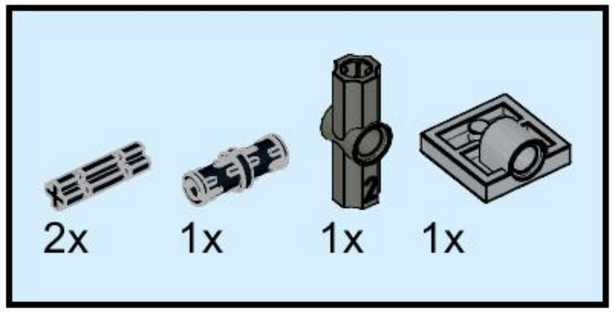


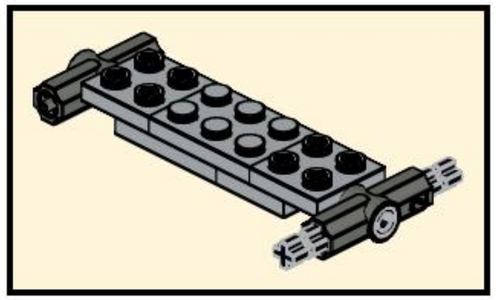

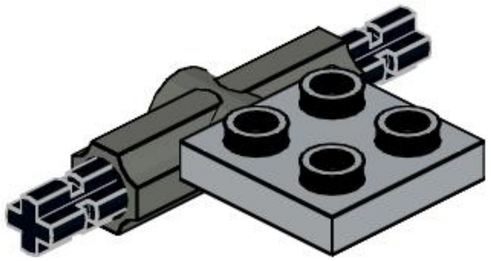

# 8

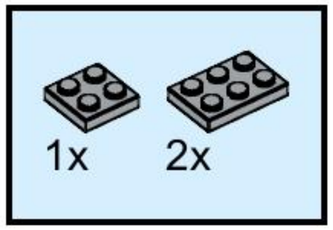


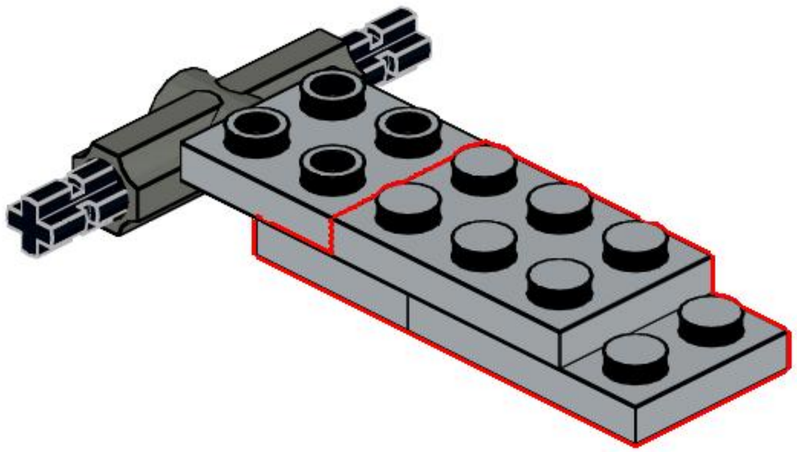

# 9

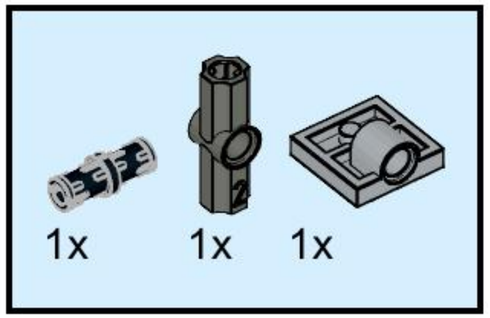


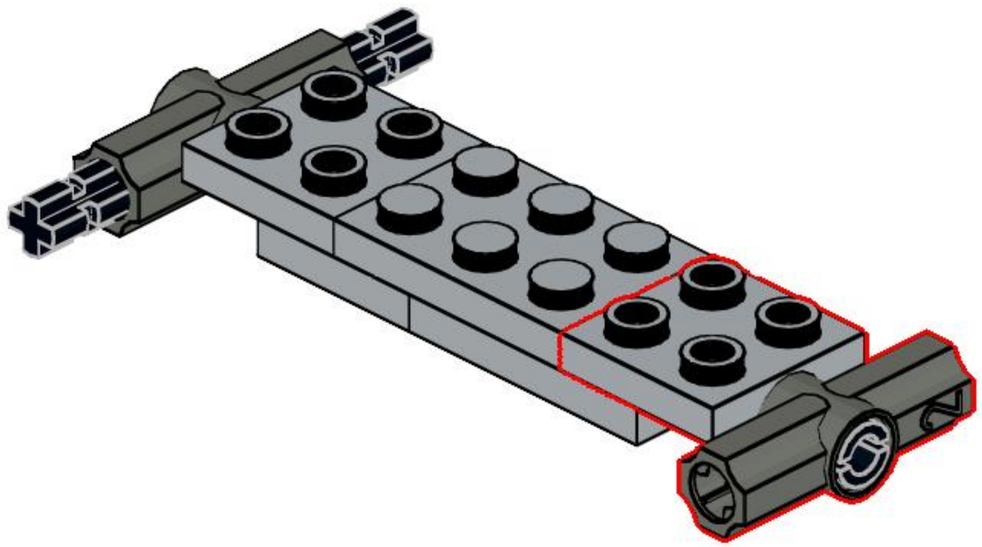

# 10

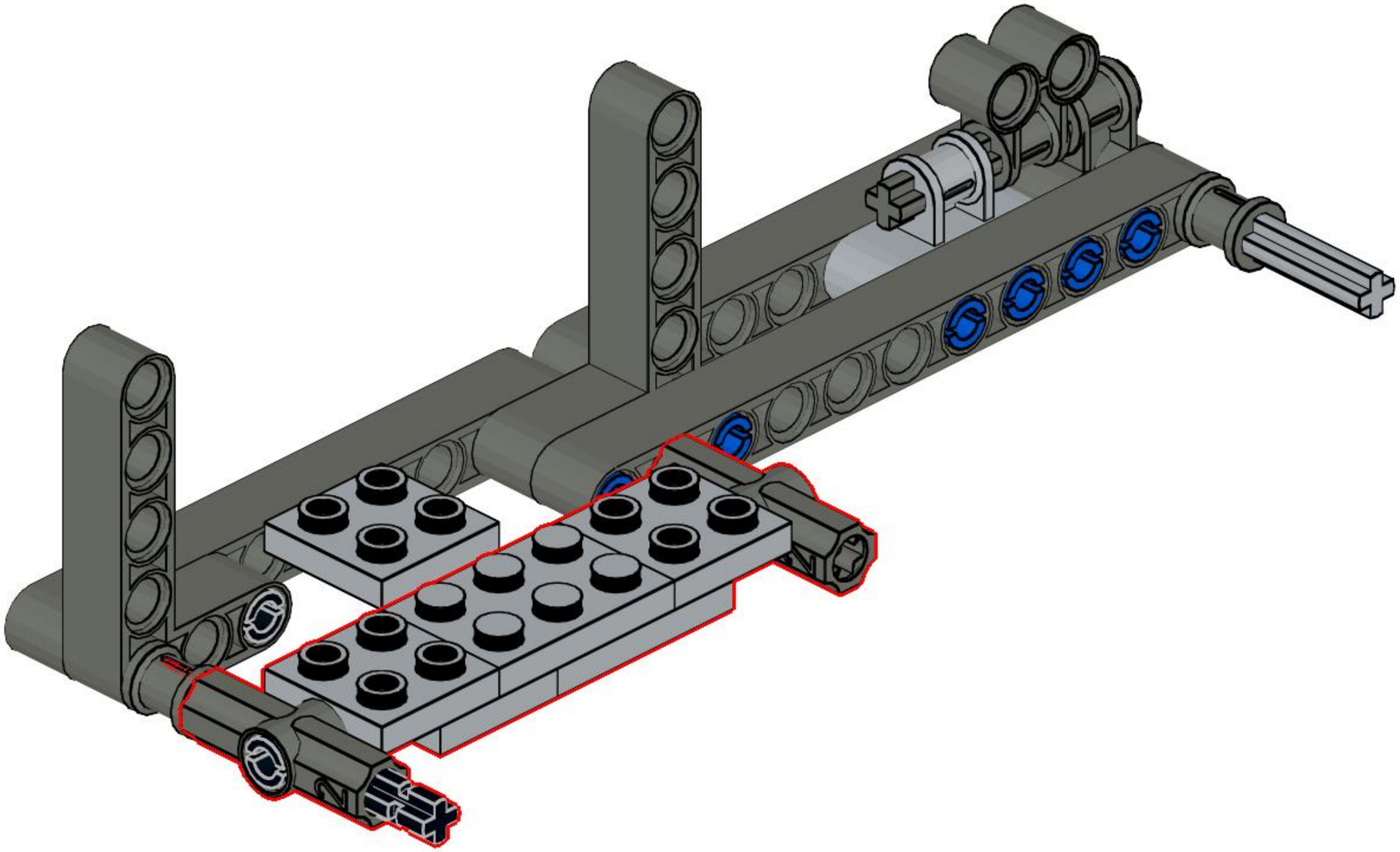

# 11

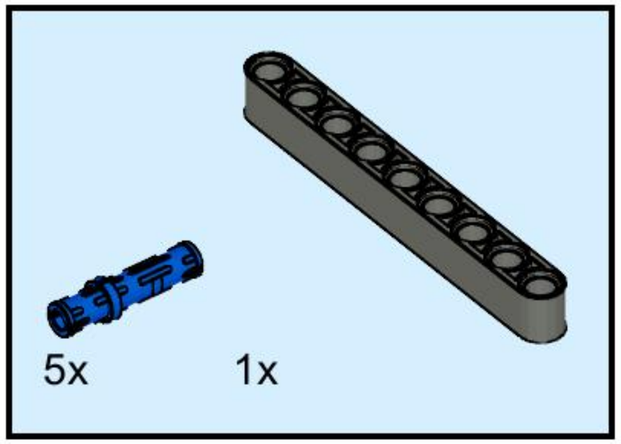


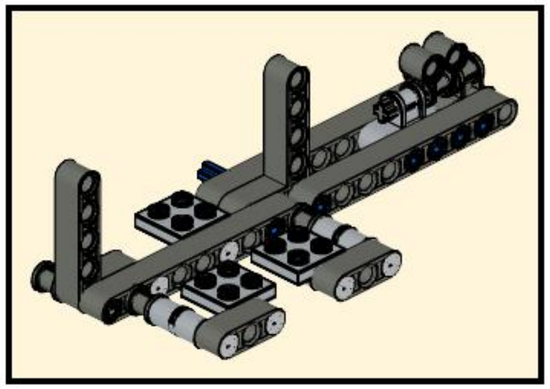

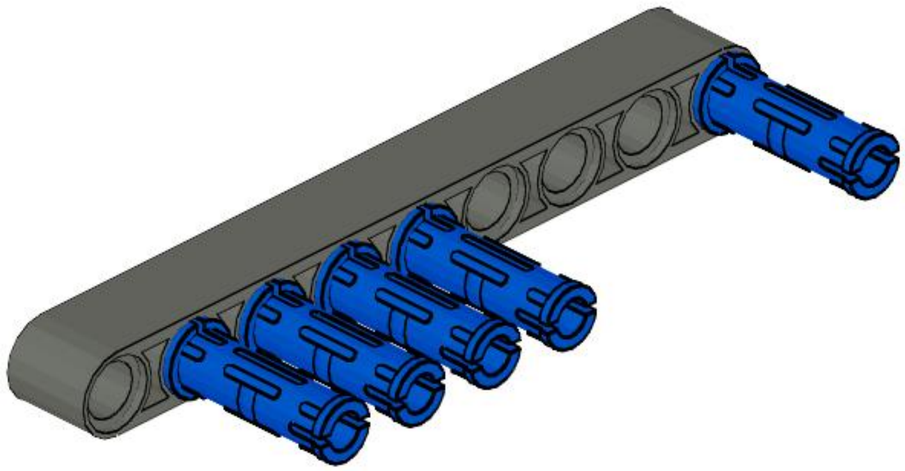

# 12

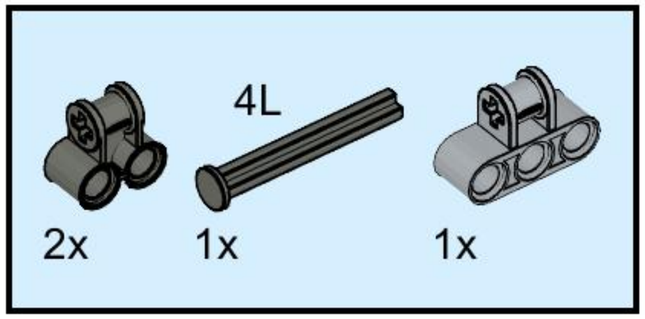


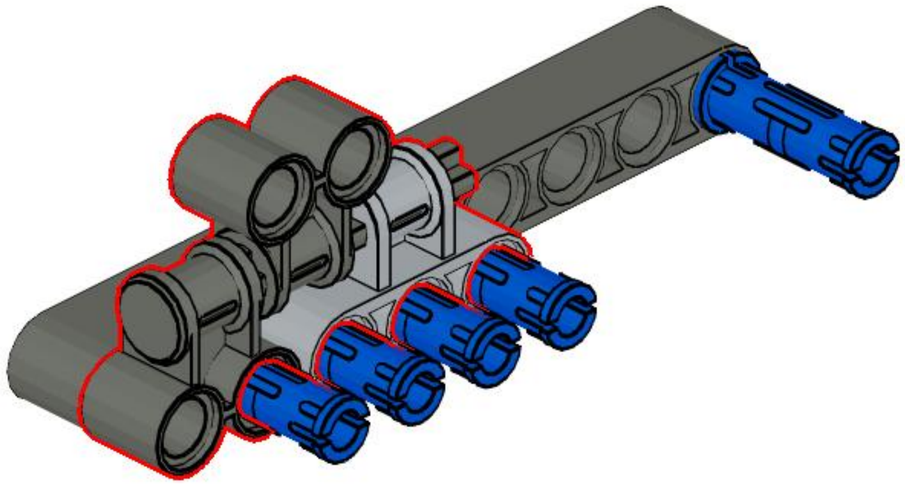

# 13

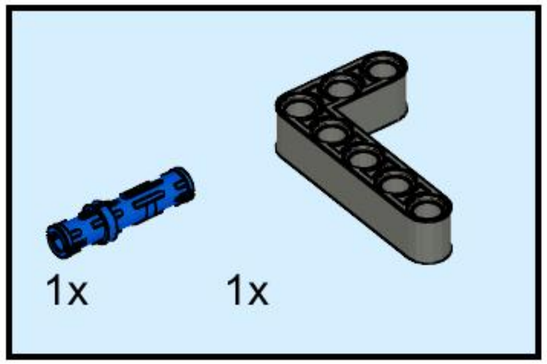


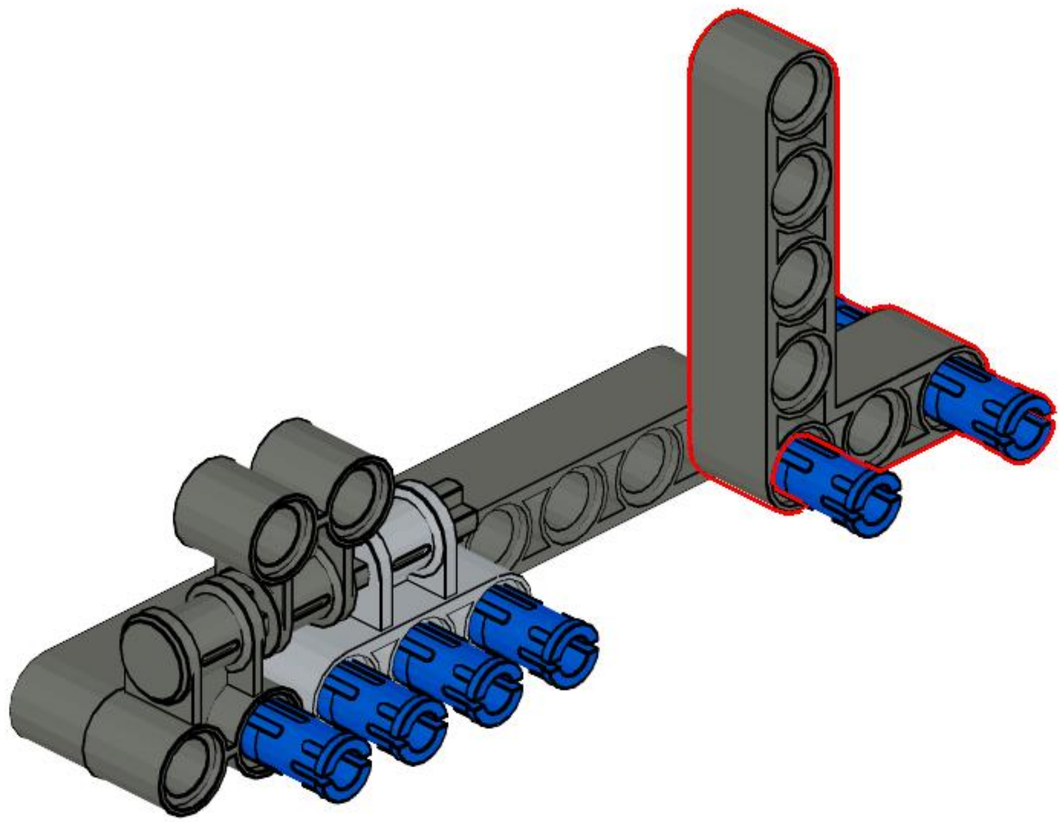

# 14

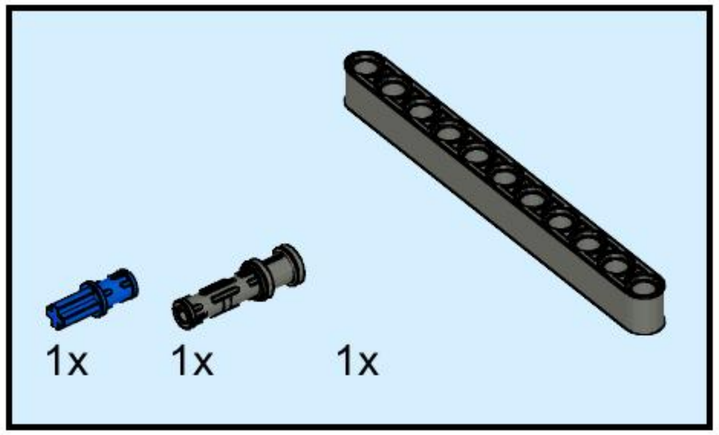


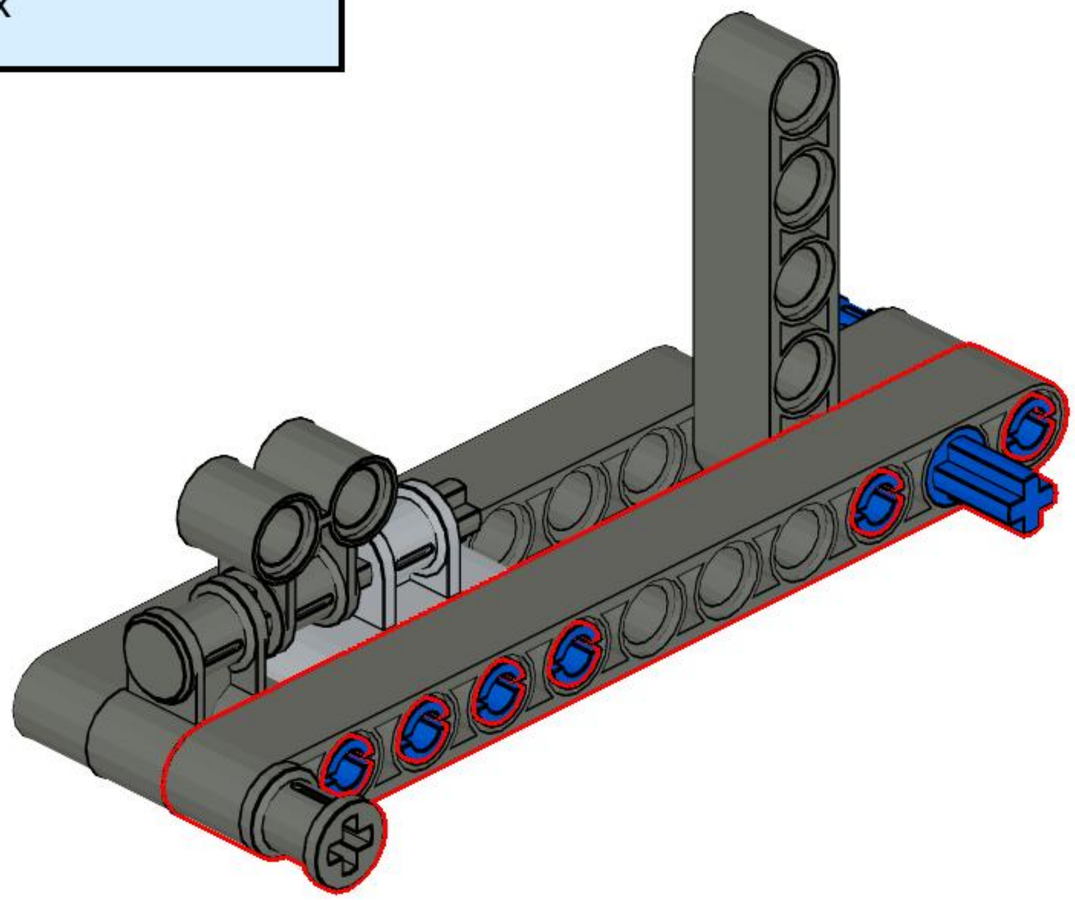

# 15

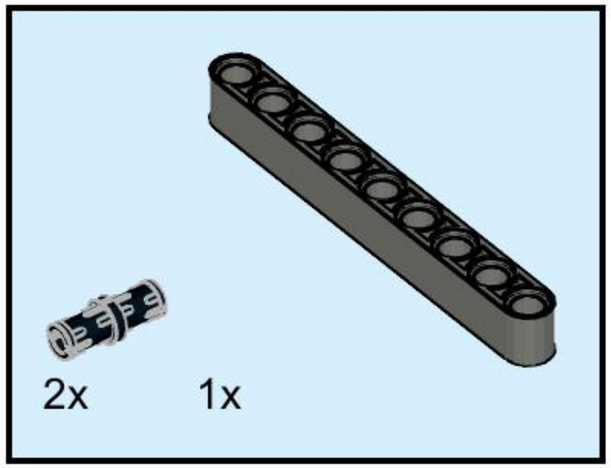


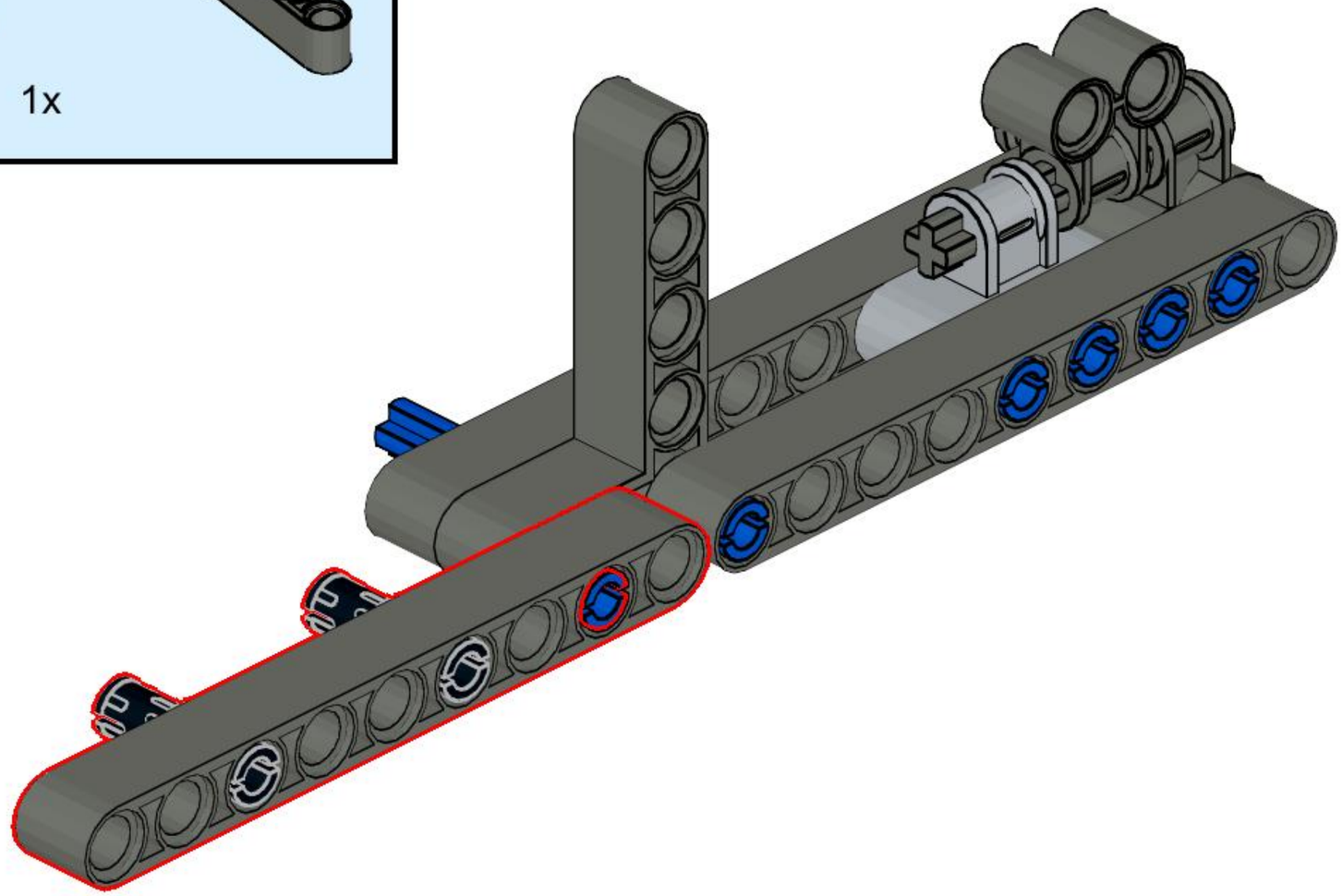

# 16

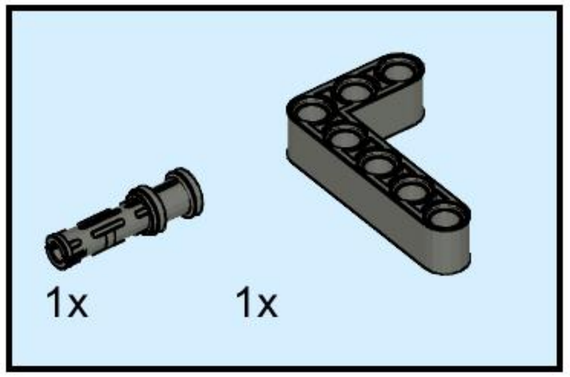


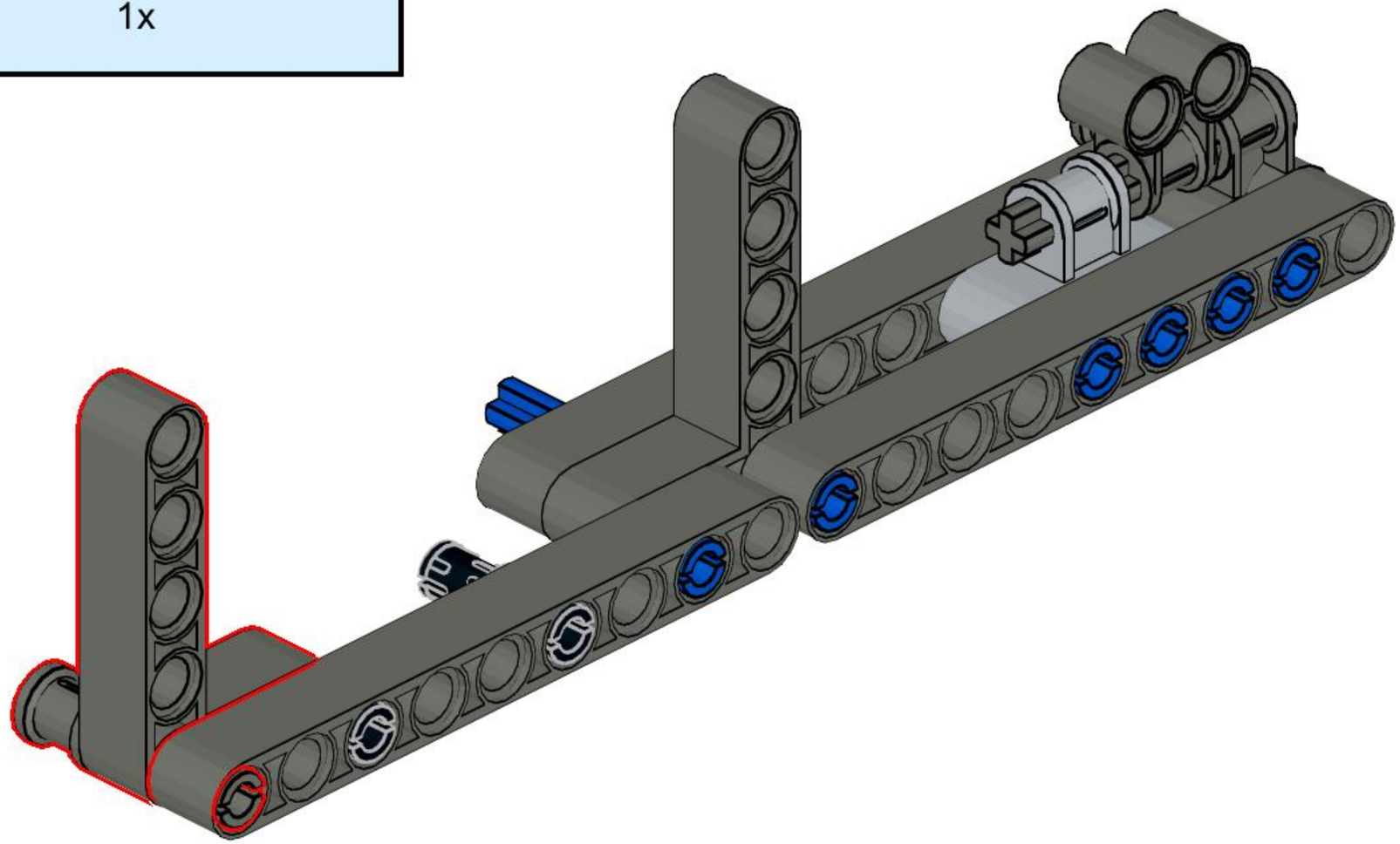

# 17

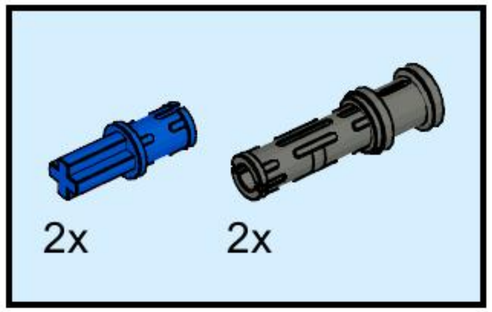


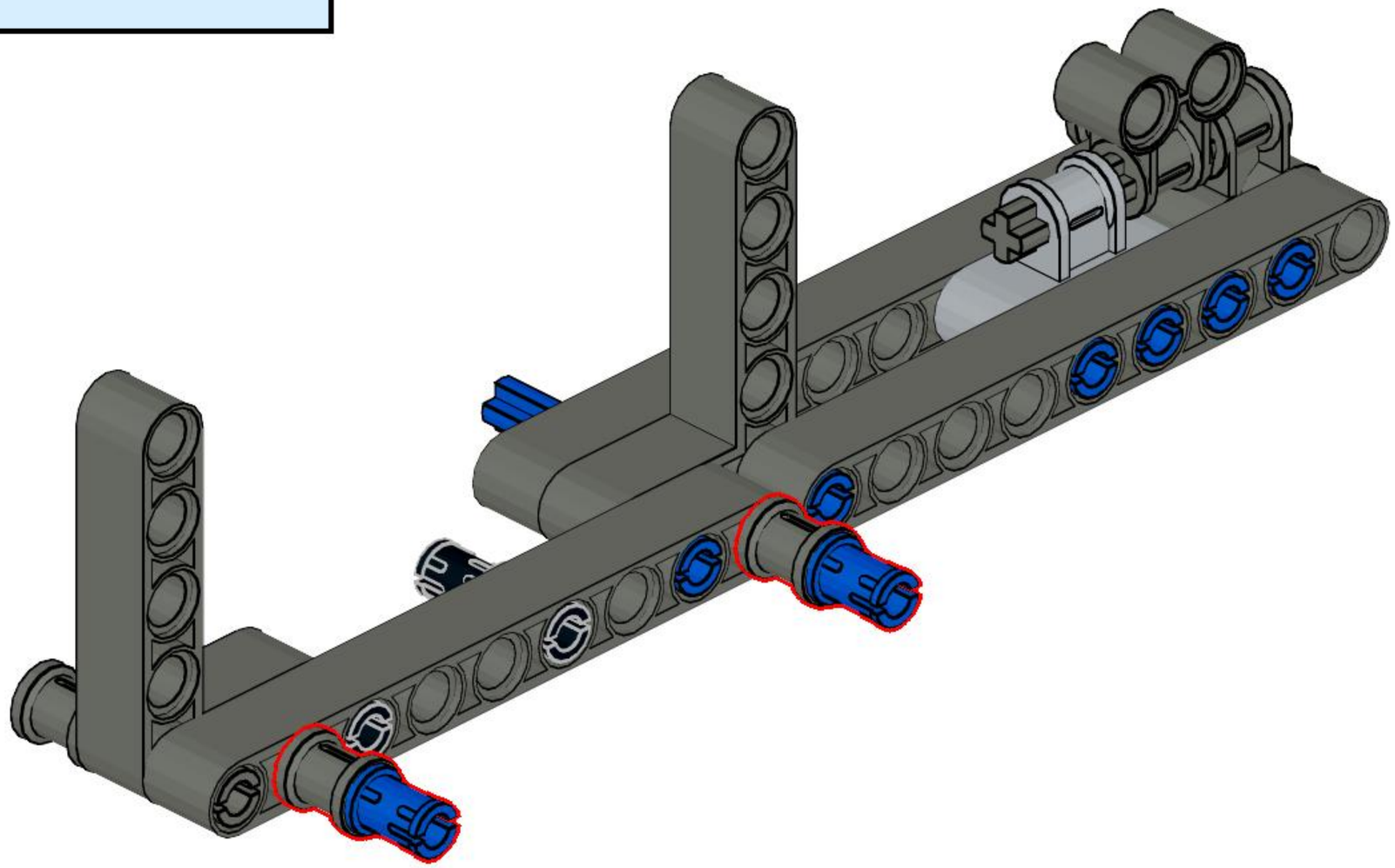

# 18

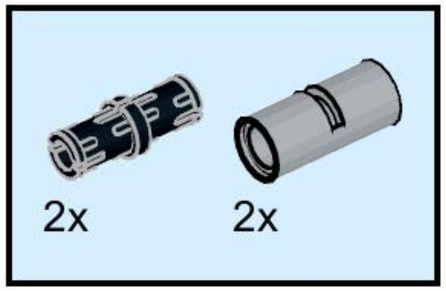


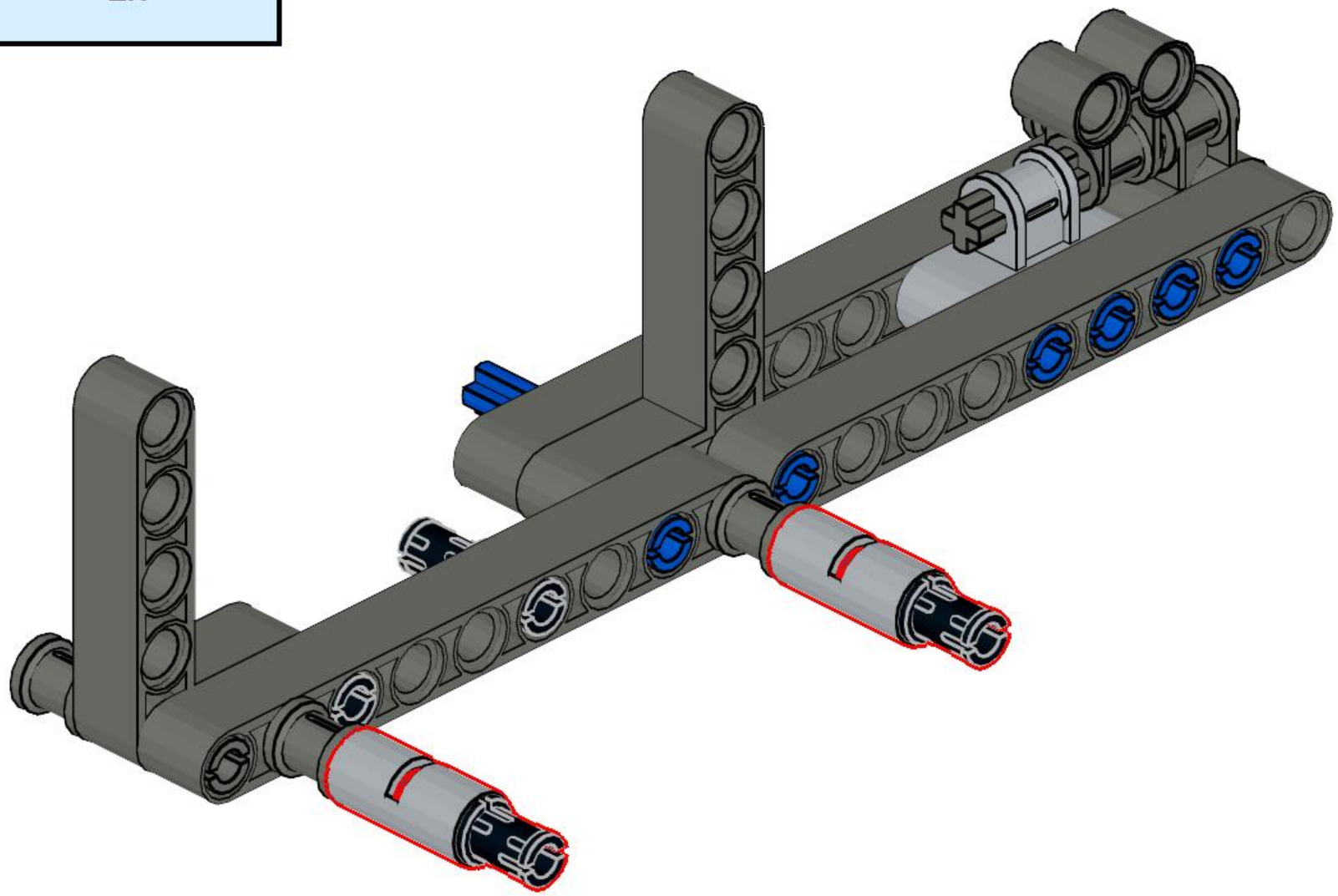

# 19

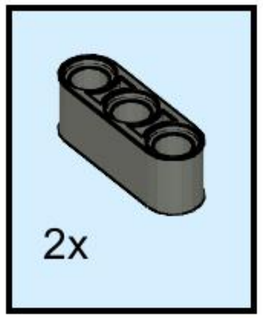


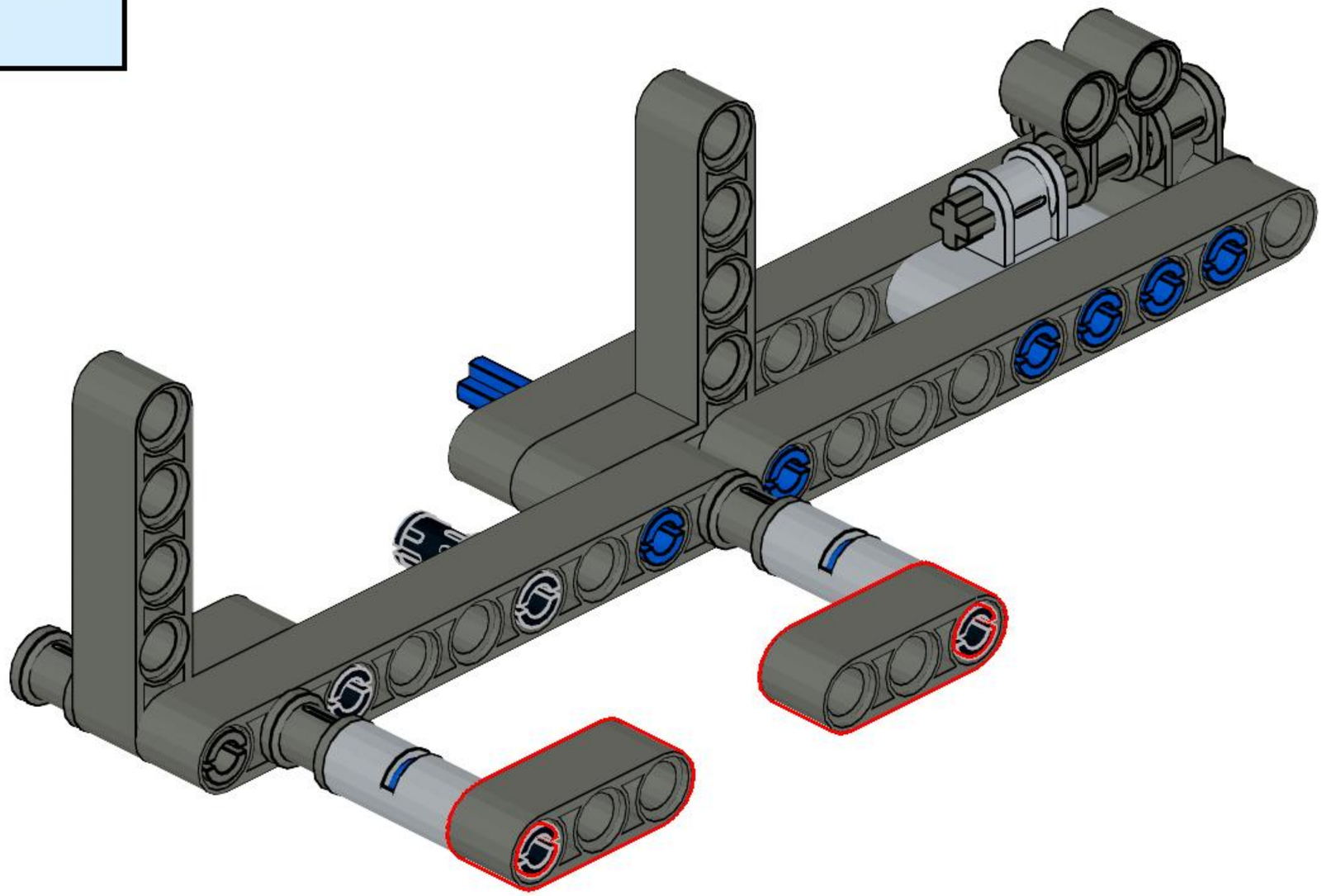

# 20

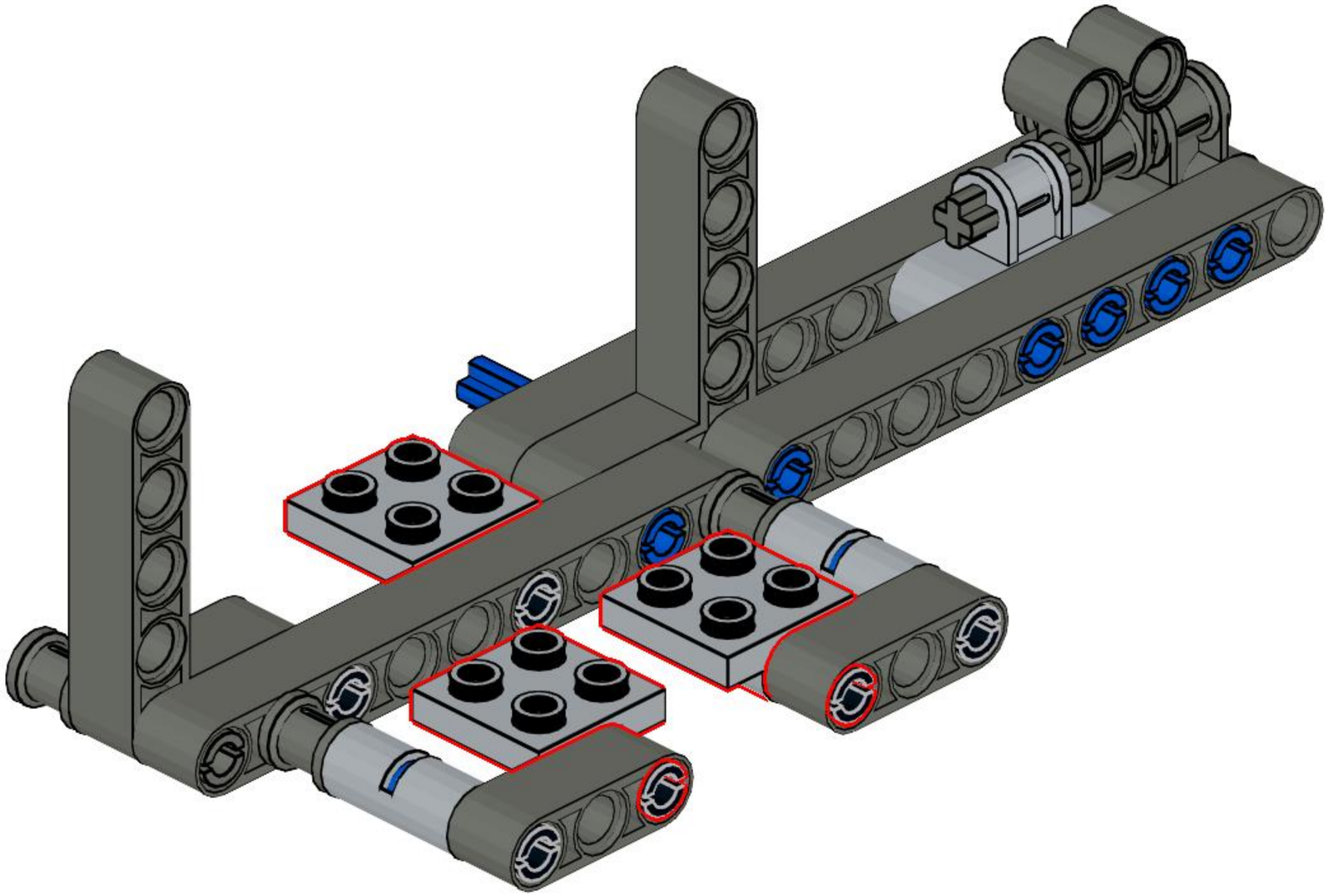

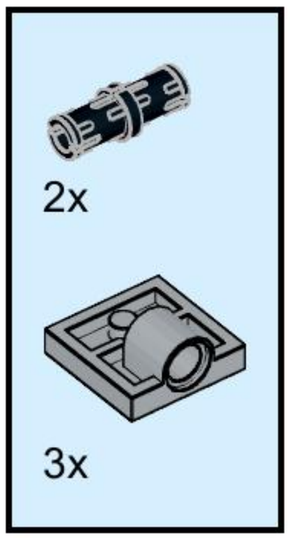

# 21

These two connectors can be slid to adjust the final positioning of the lime wheel.

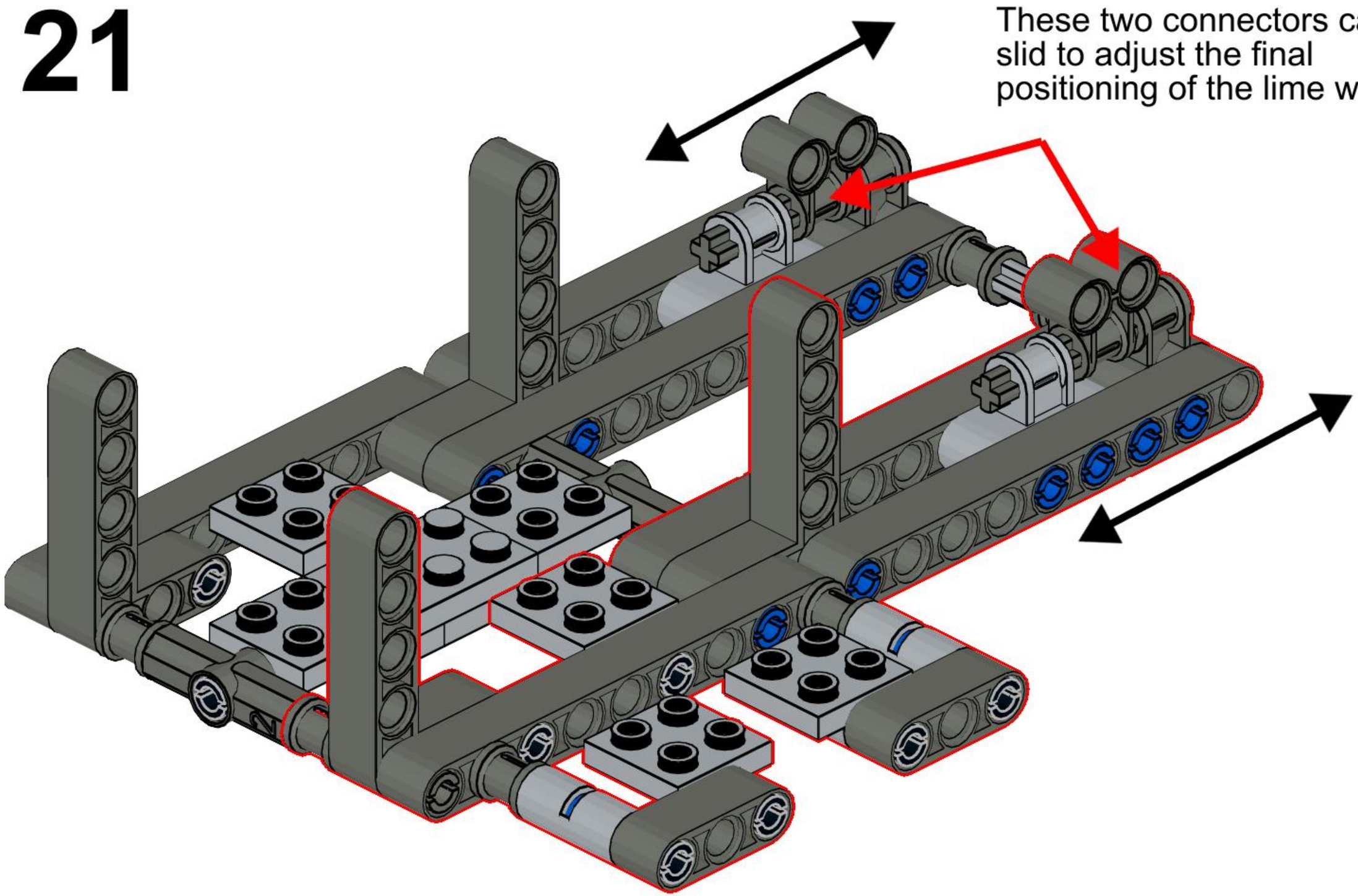

# 22

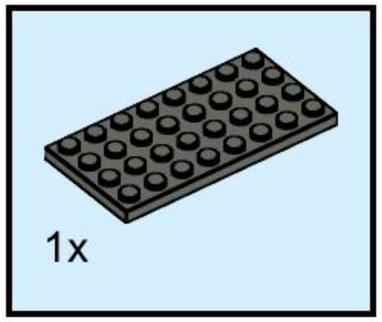


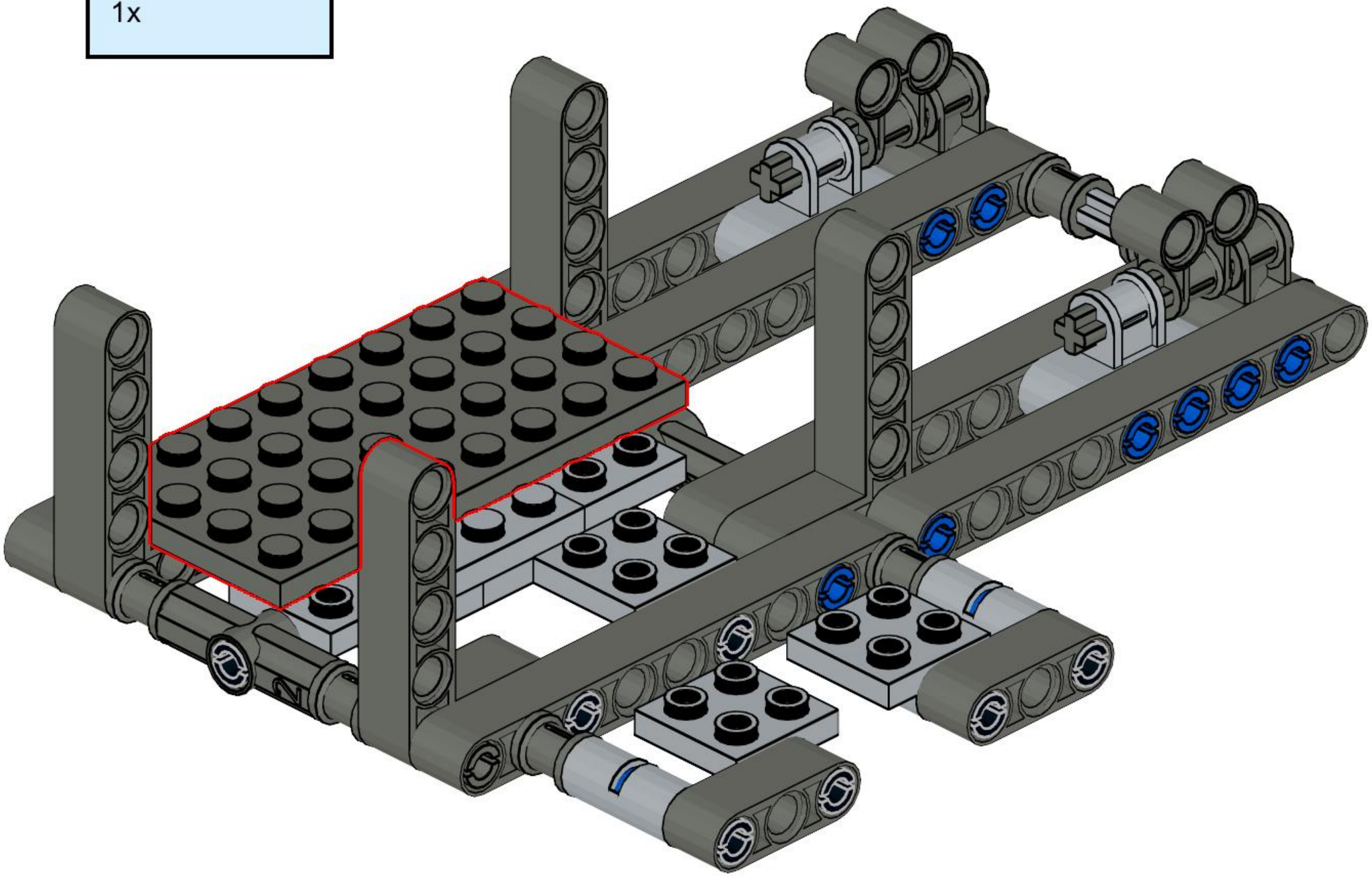

# 23

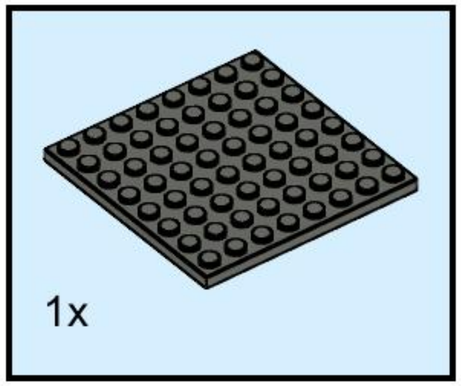


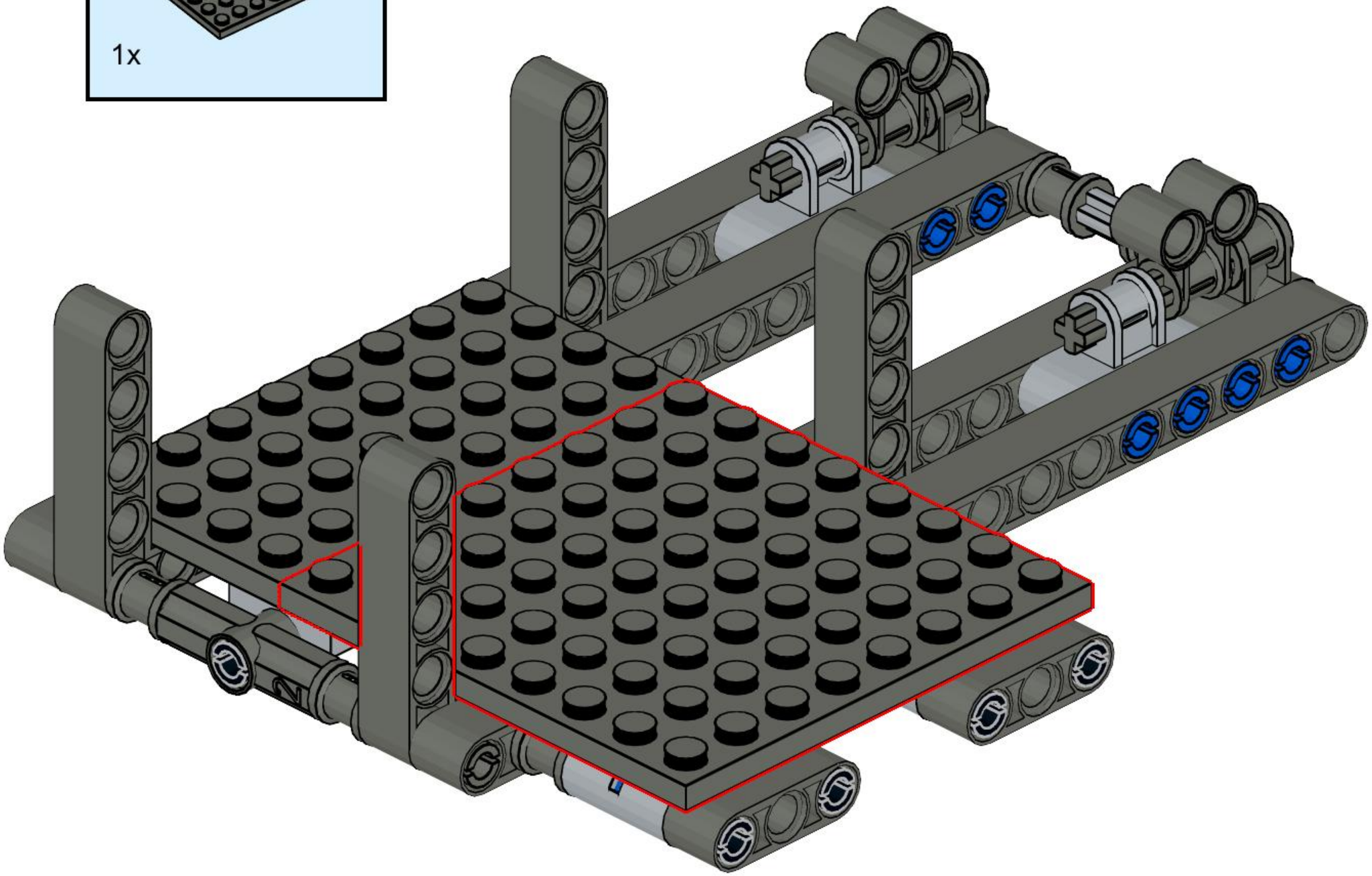

# 24

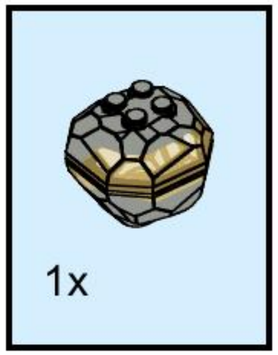


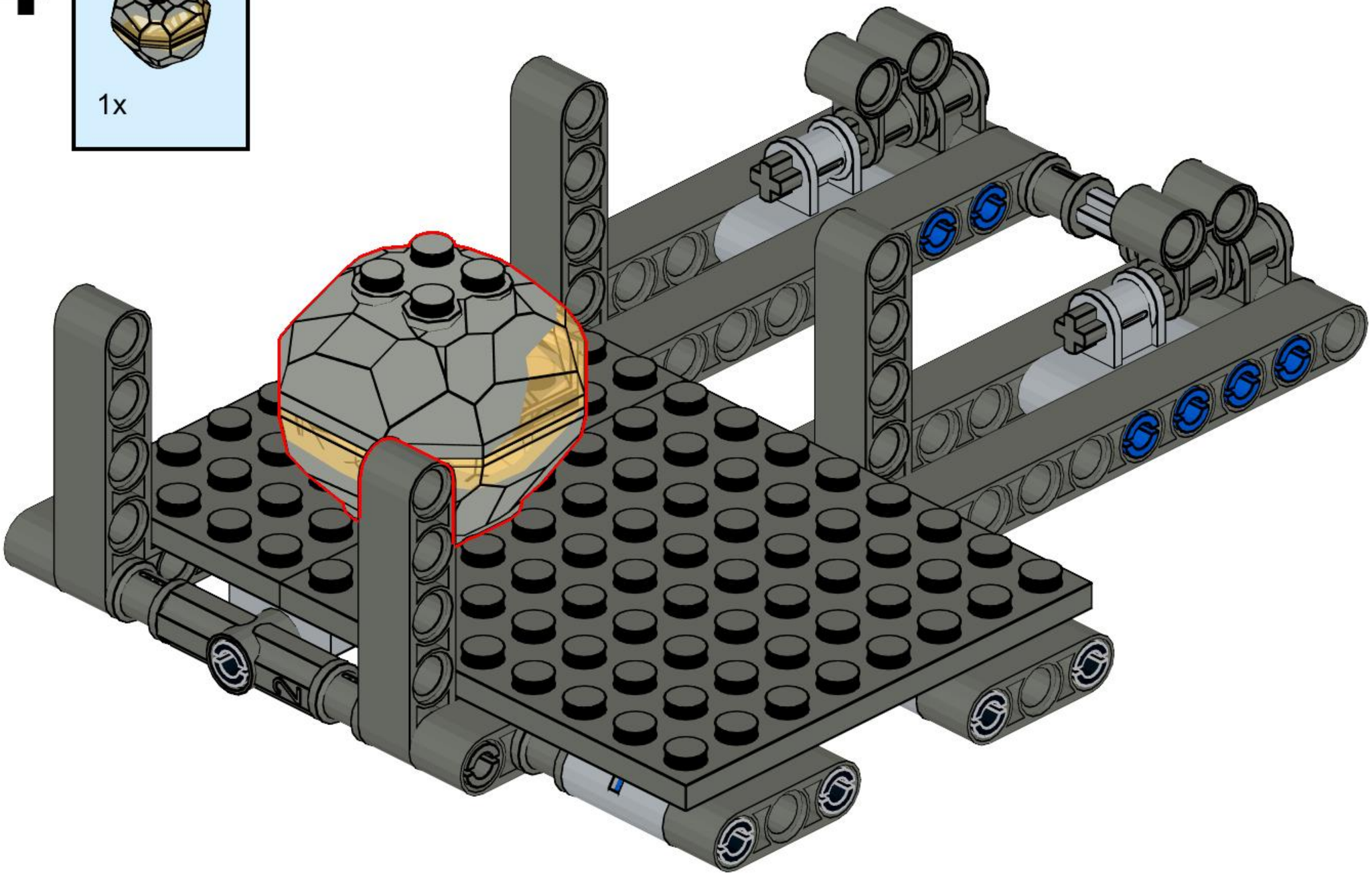

# 25

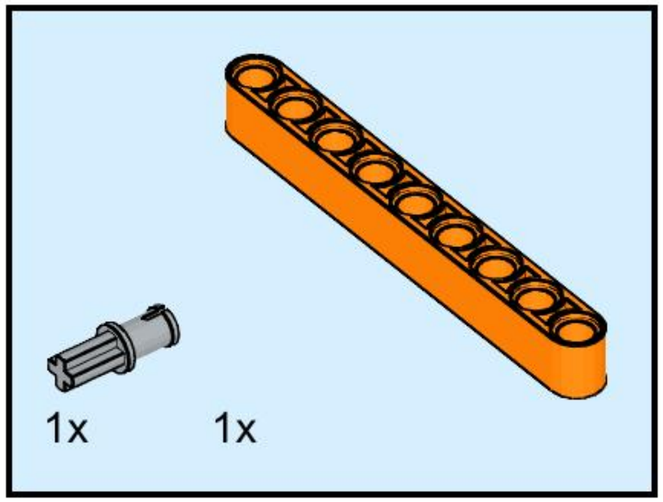


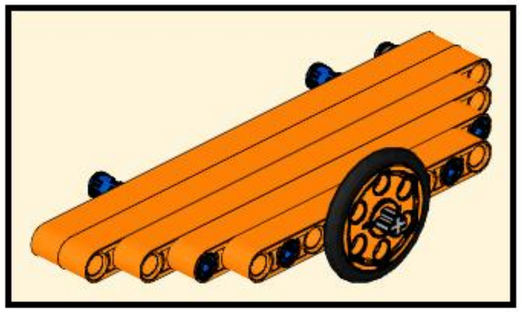

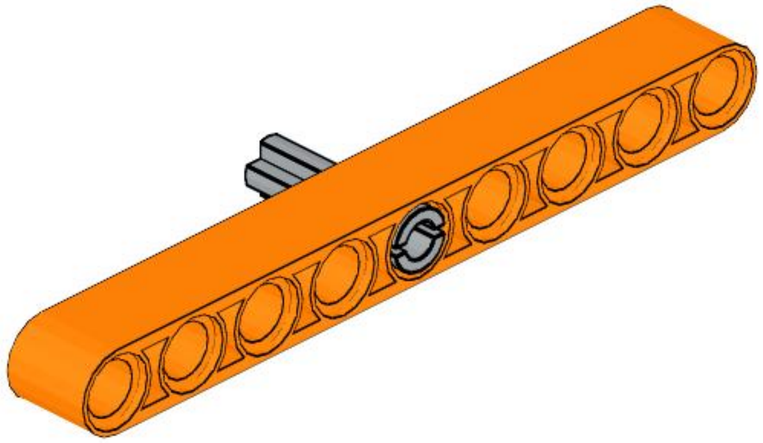

# 26

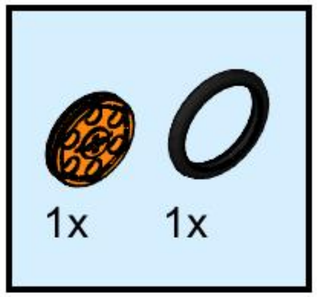


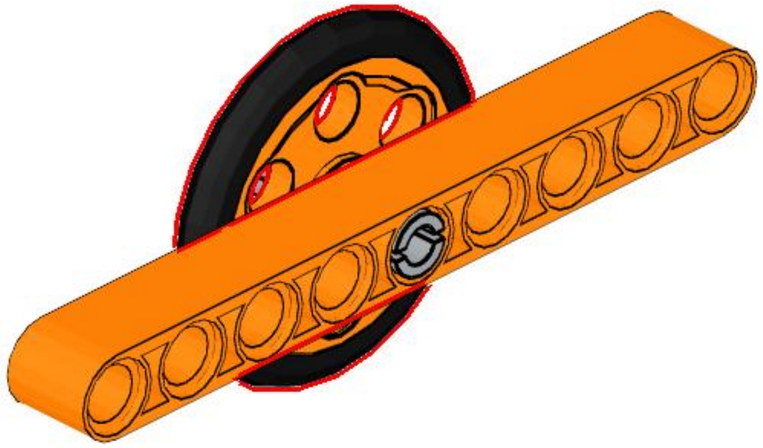

# 27

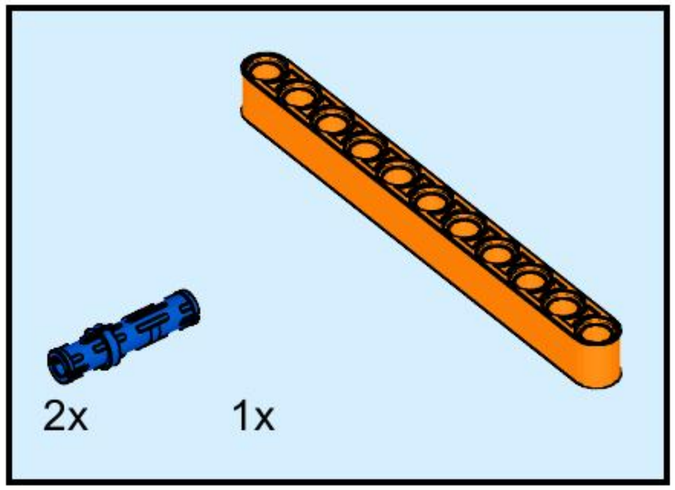


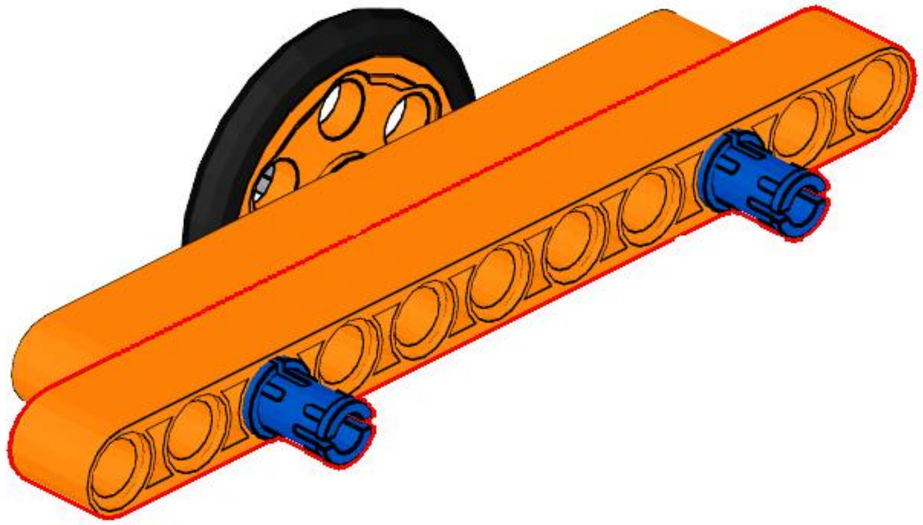

# 28

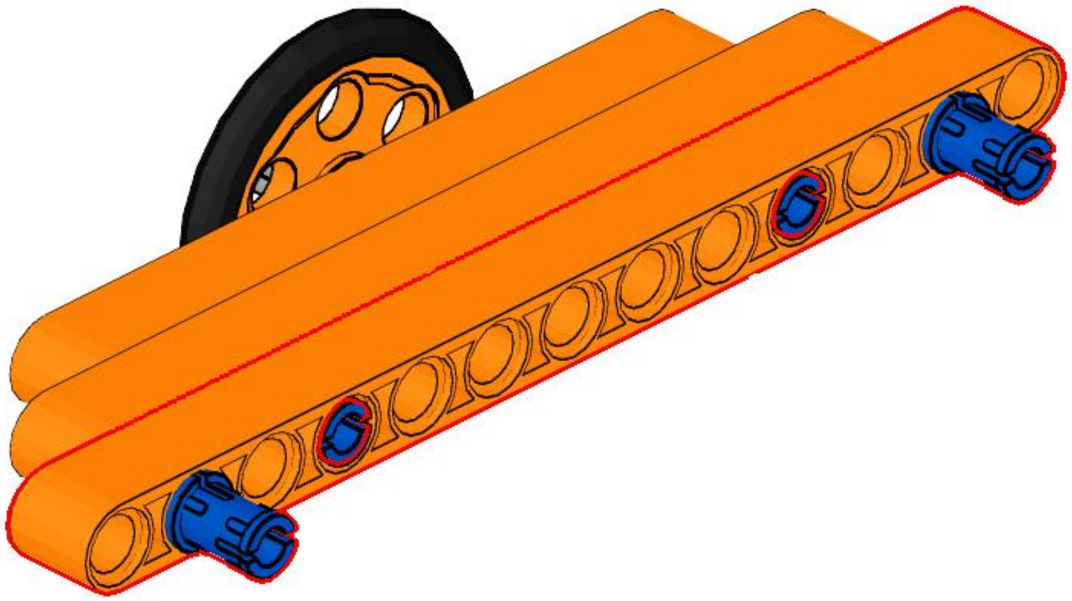

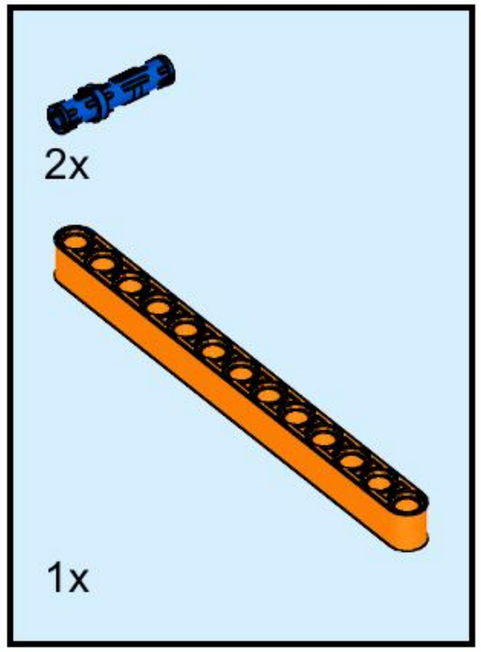

# 29

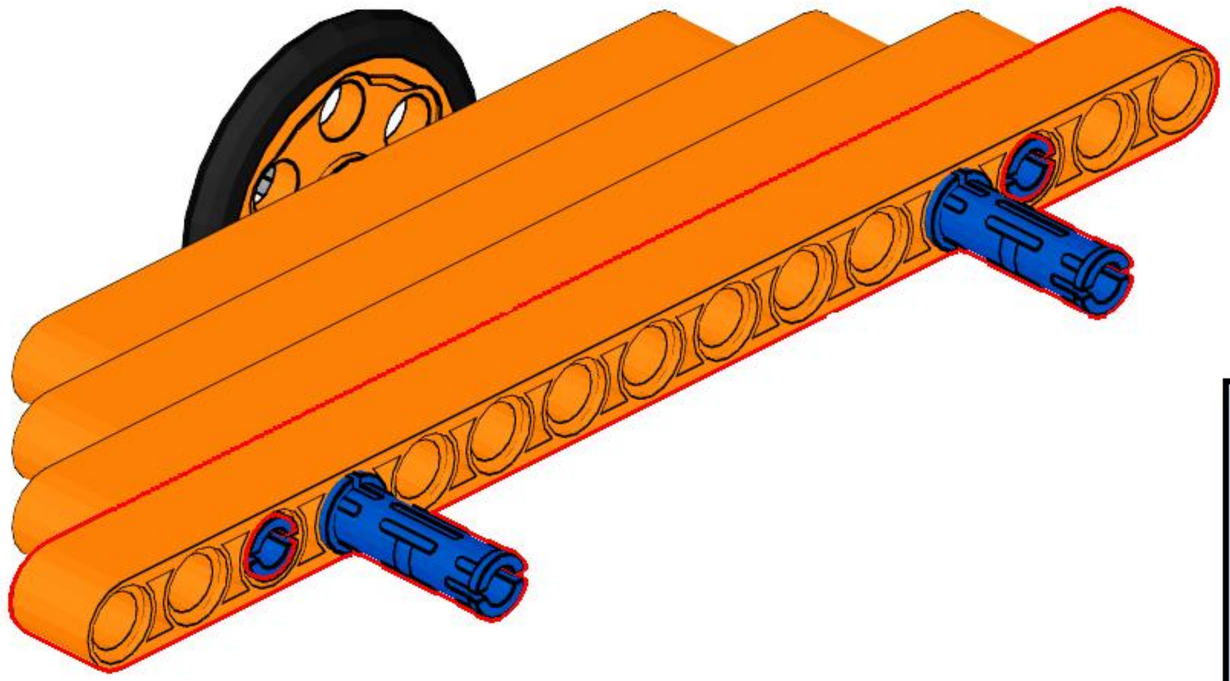

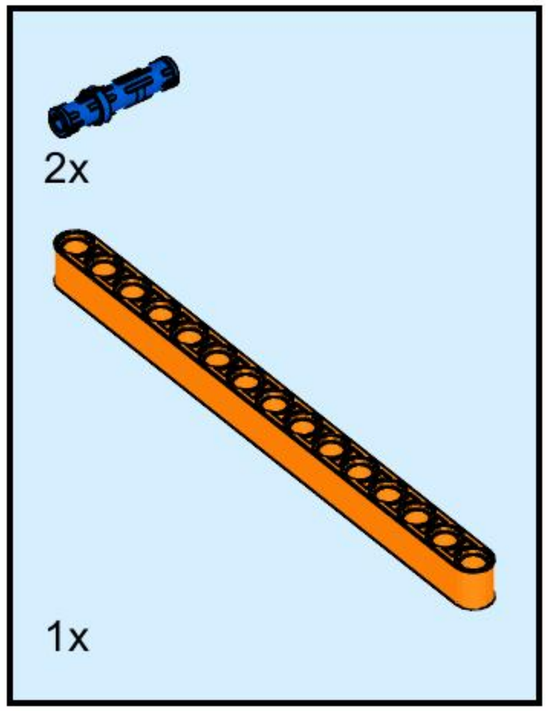

# 30

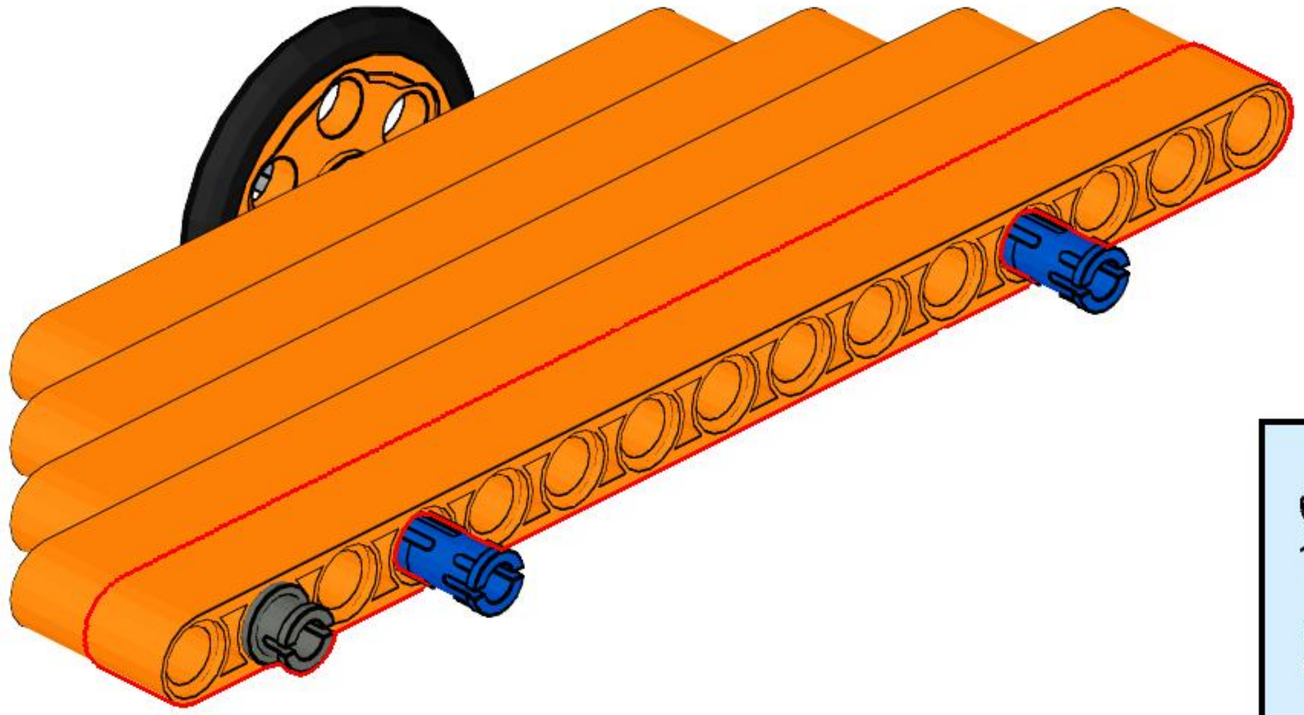

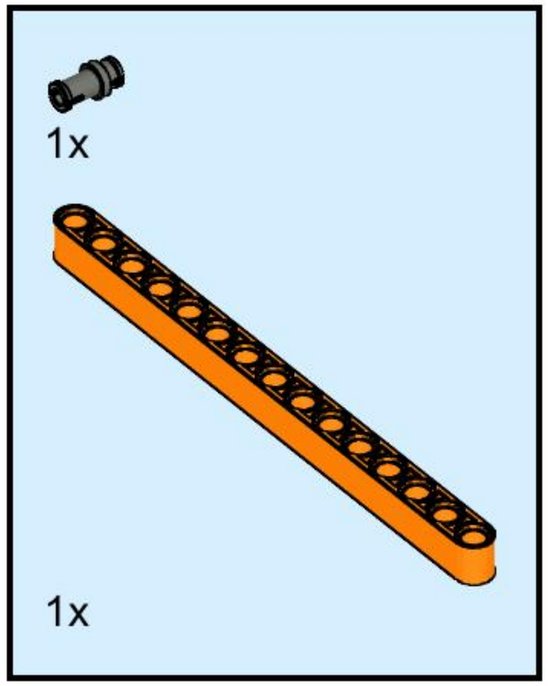

# 31

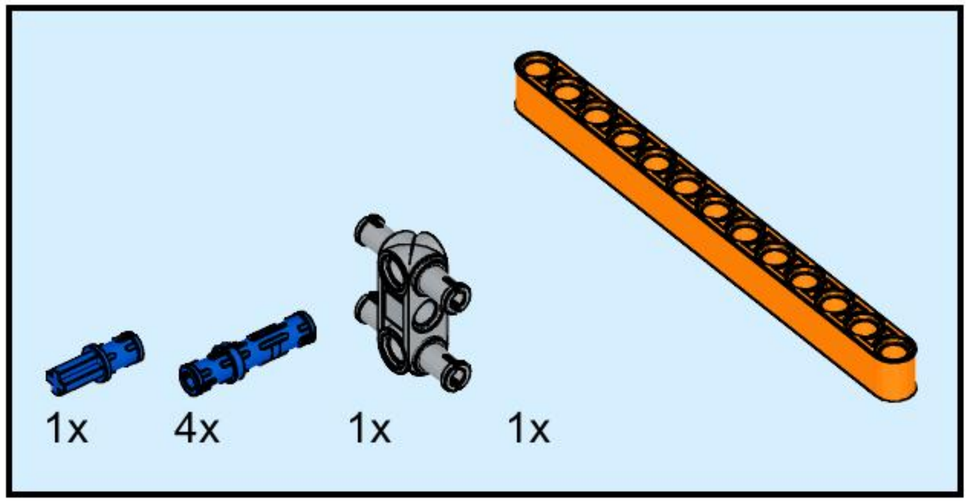


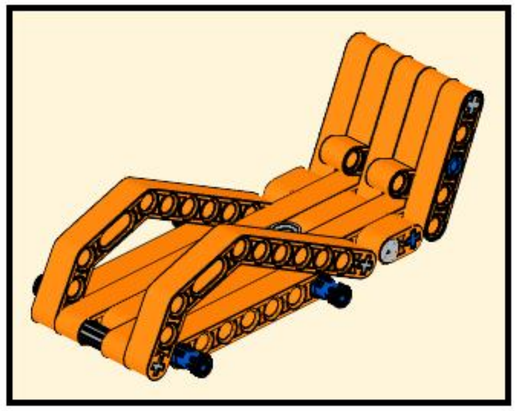

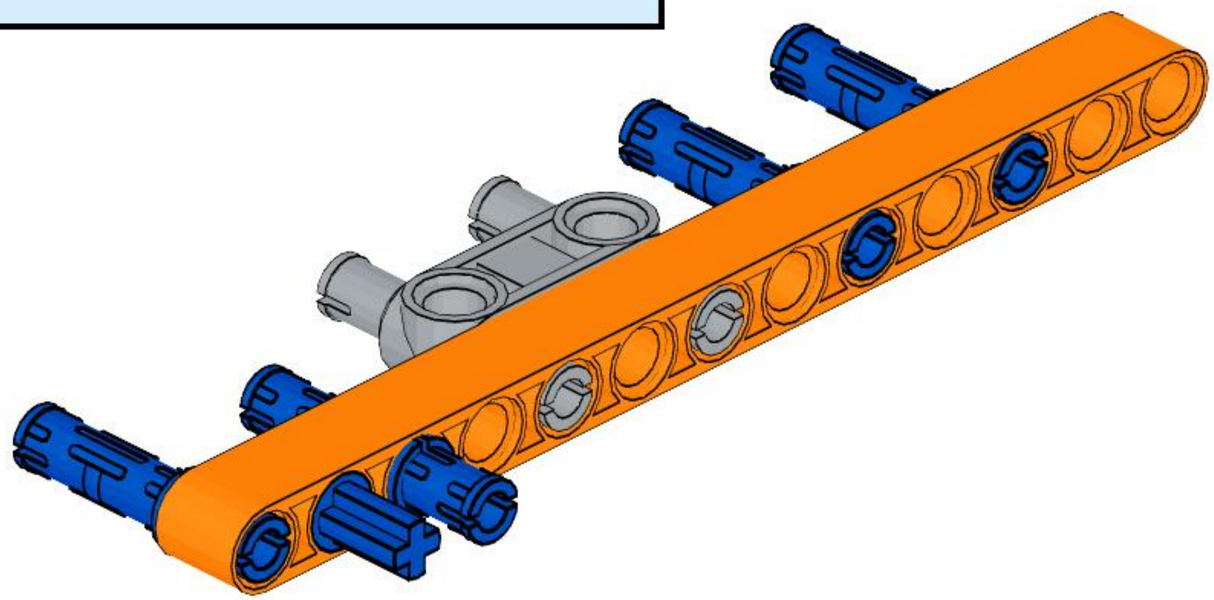

# 32

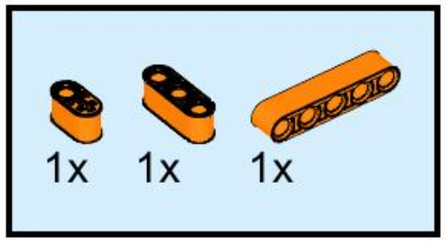


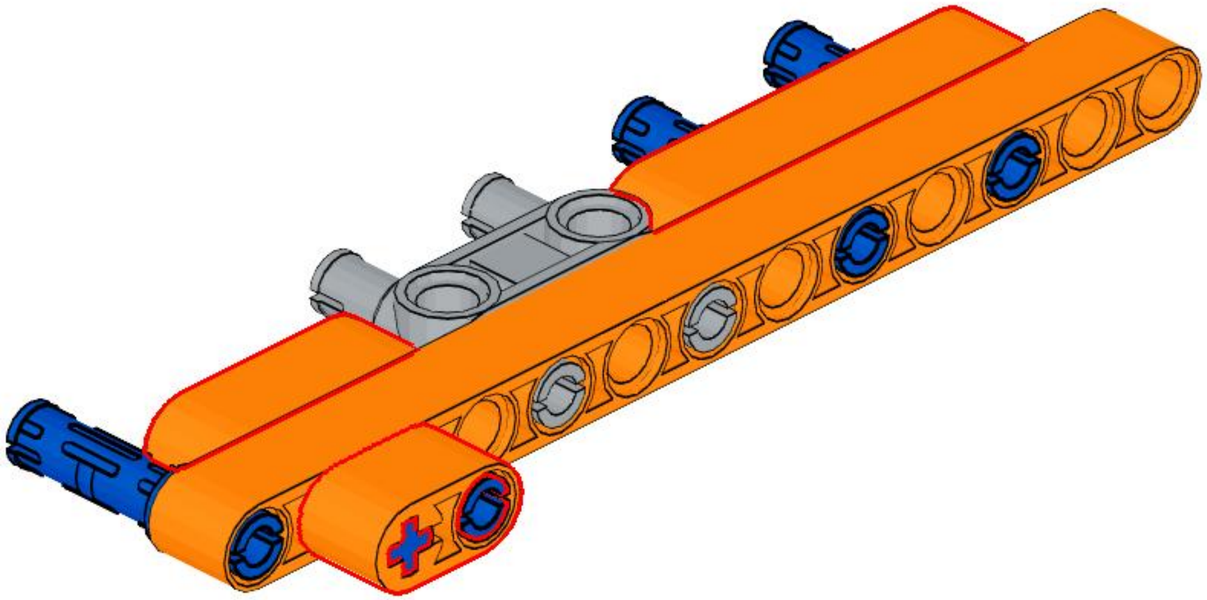

# 33

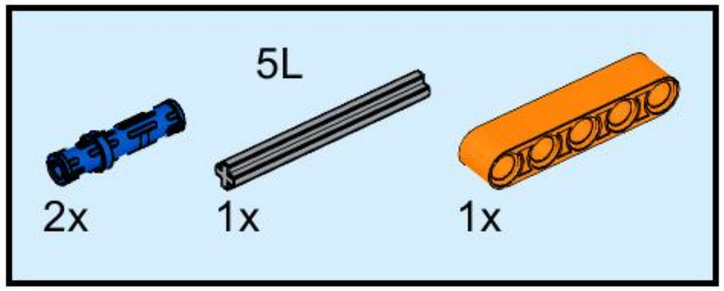


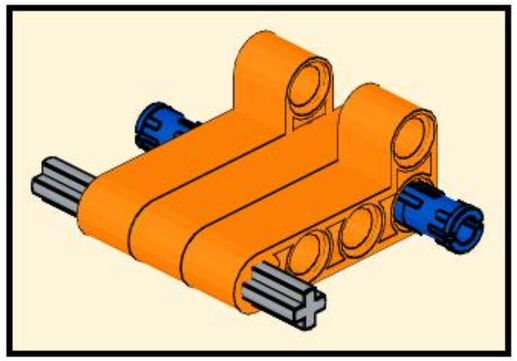

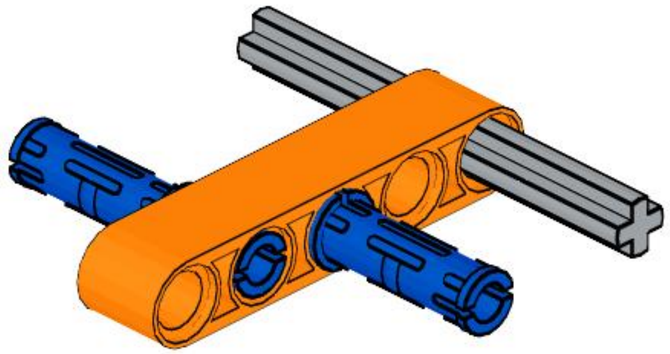

# 34

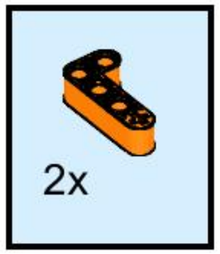


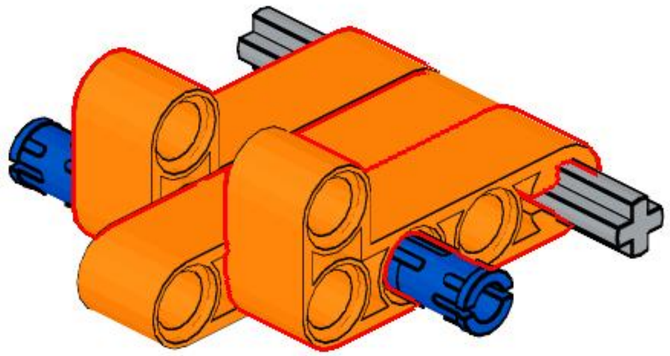

# 35

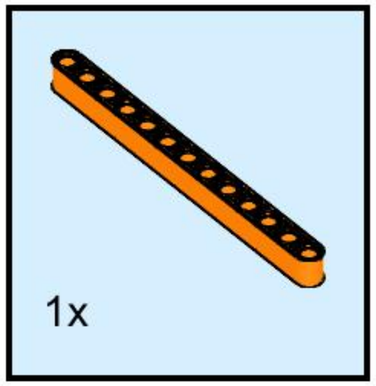


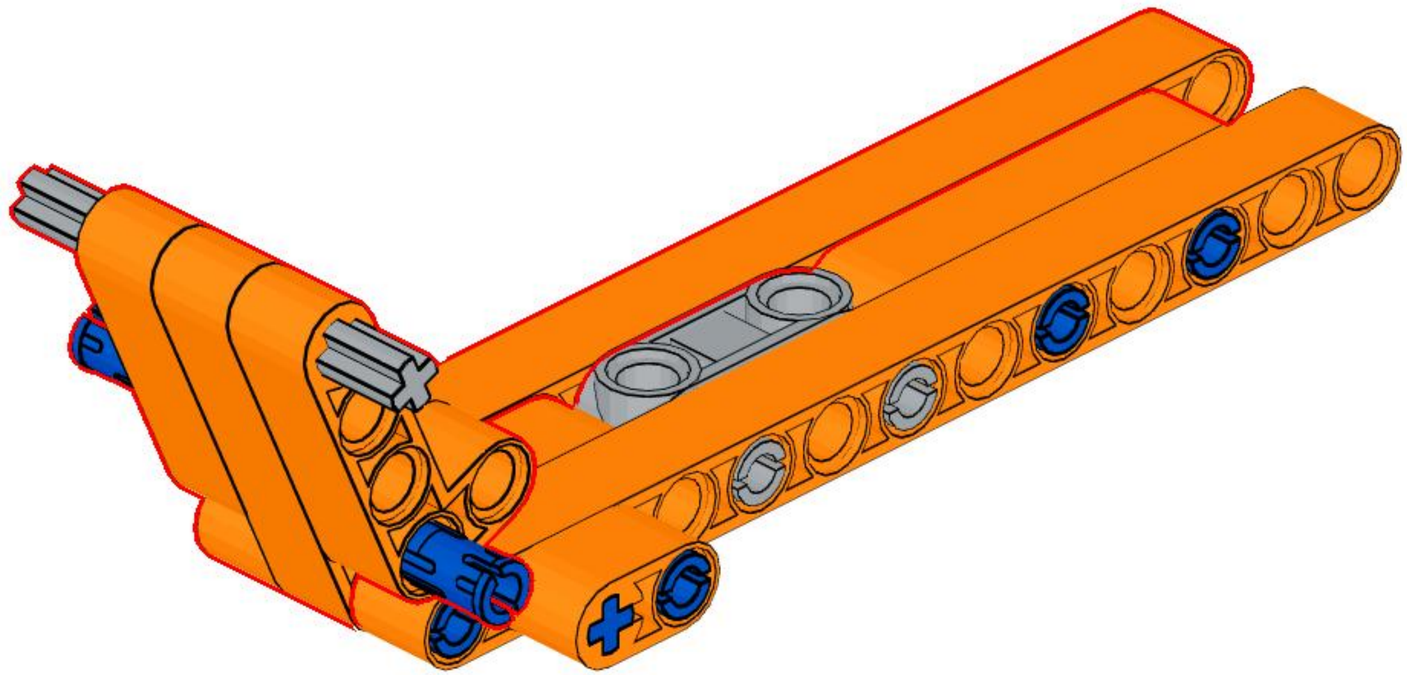

# 36

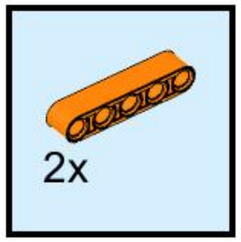


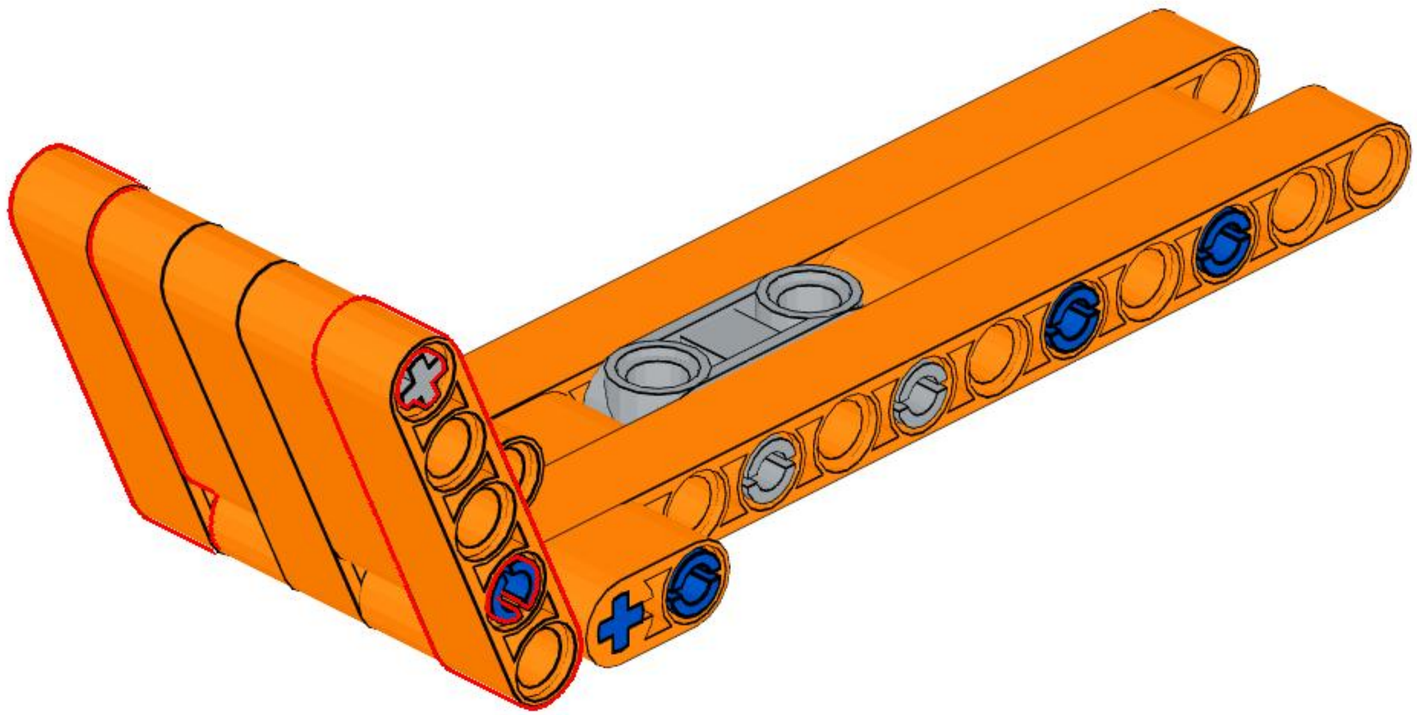

# 37

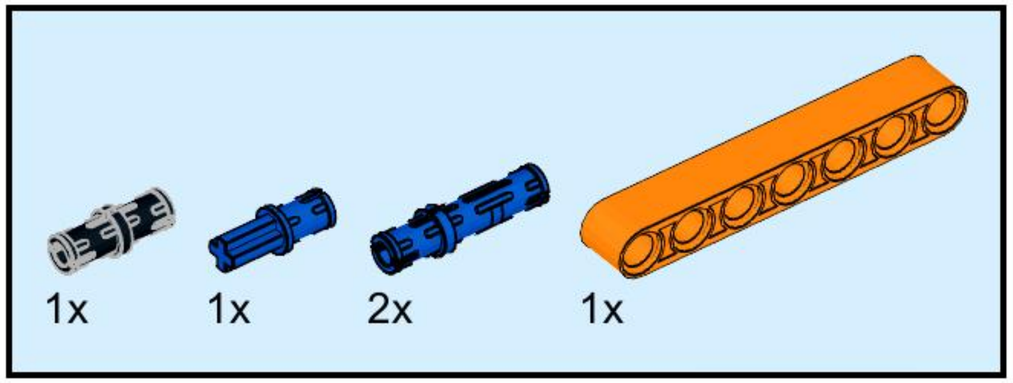


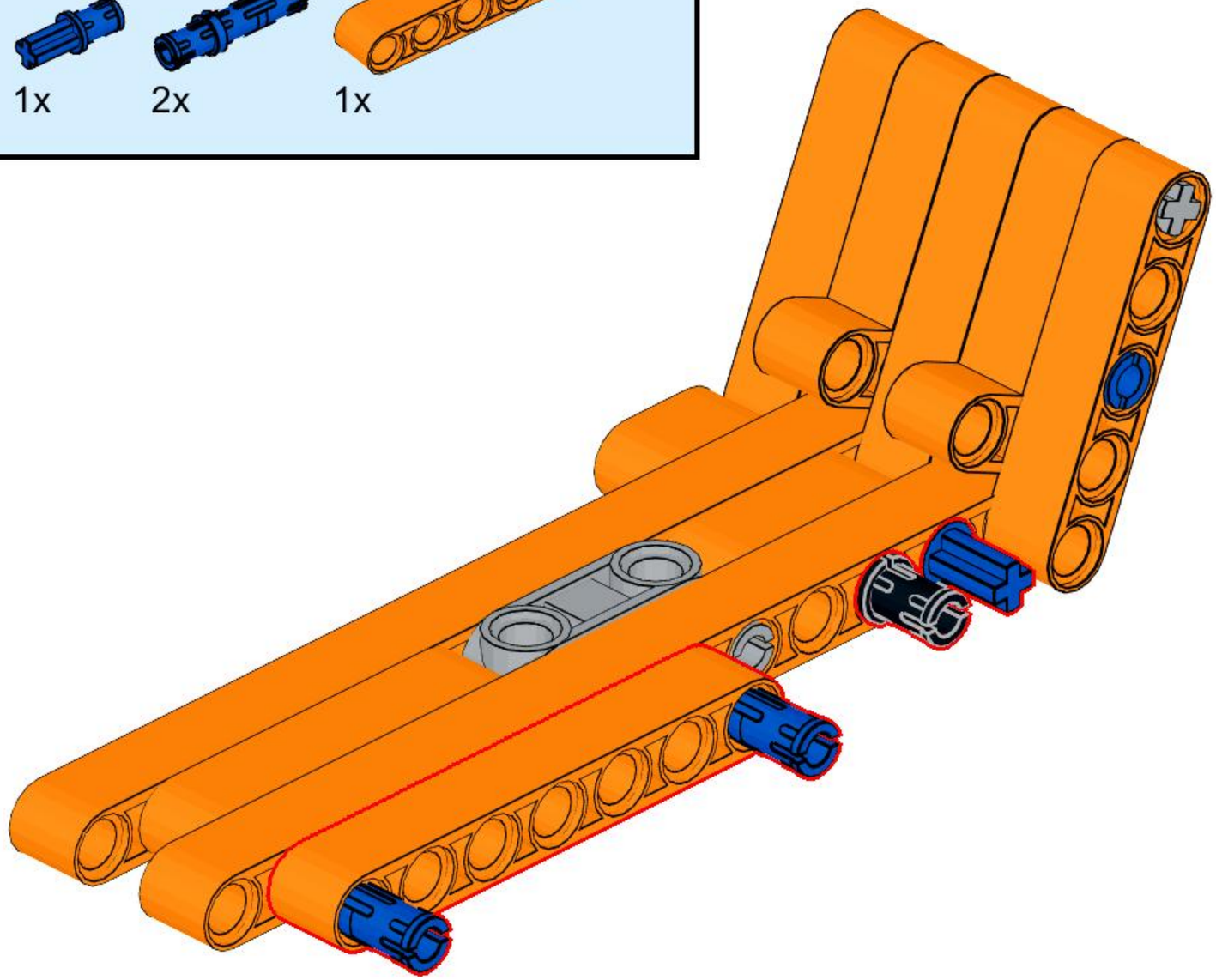

# 38

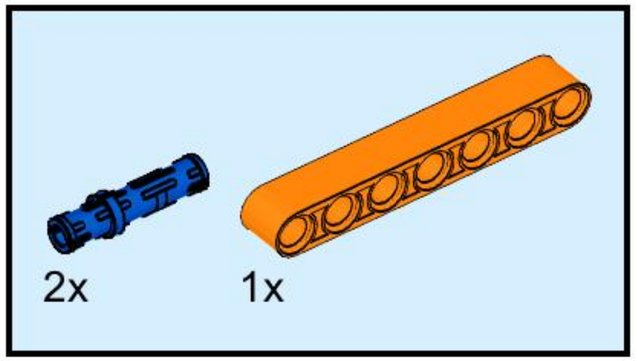


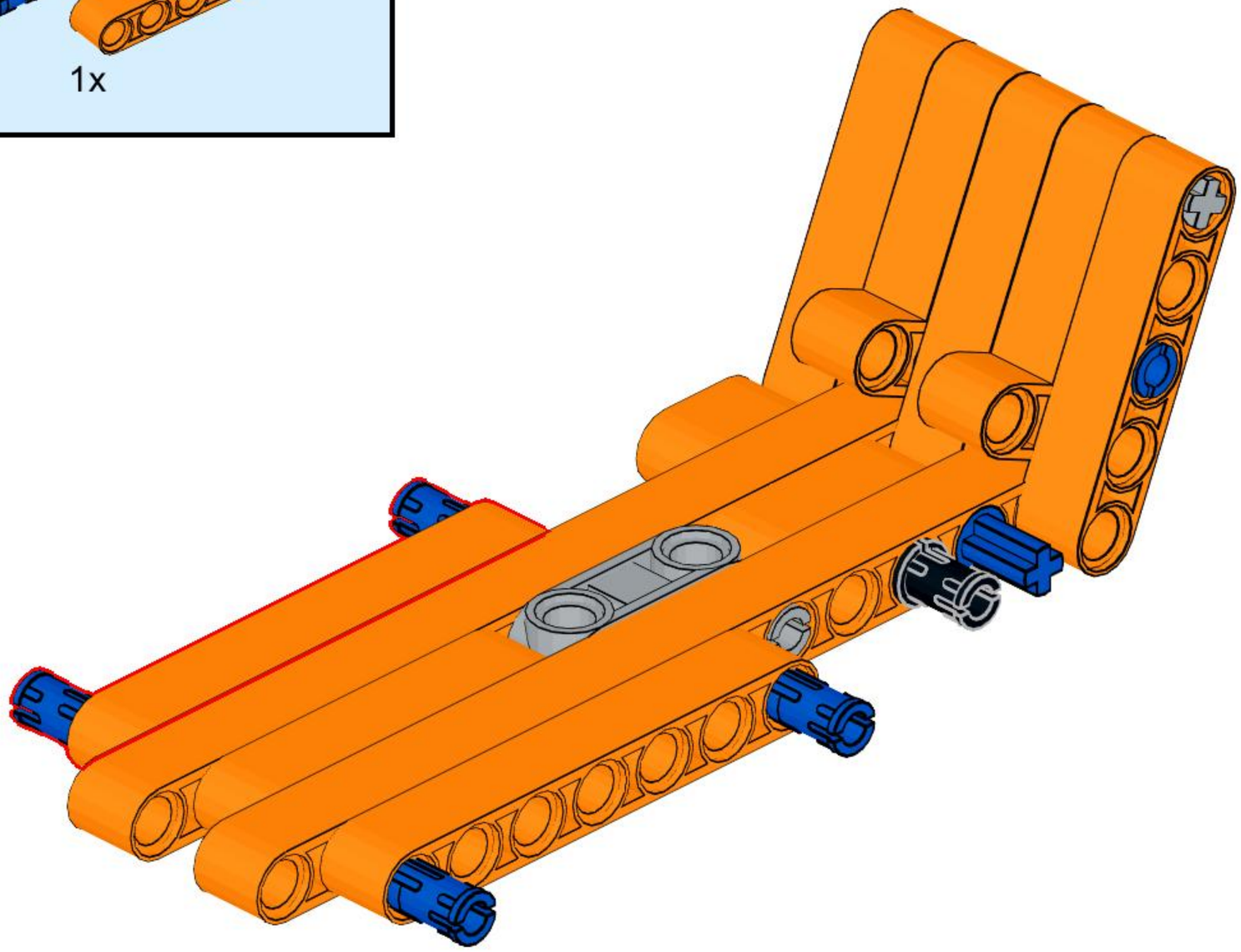

# 39

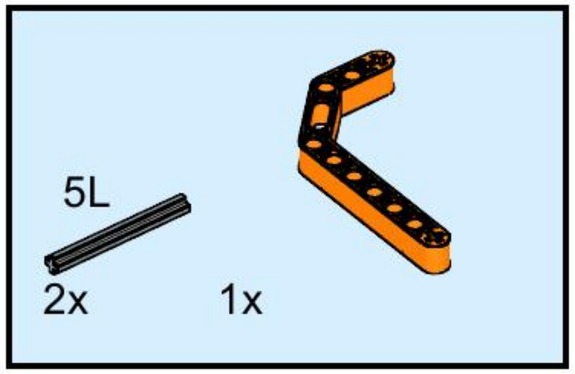


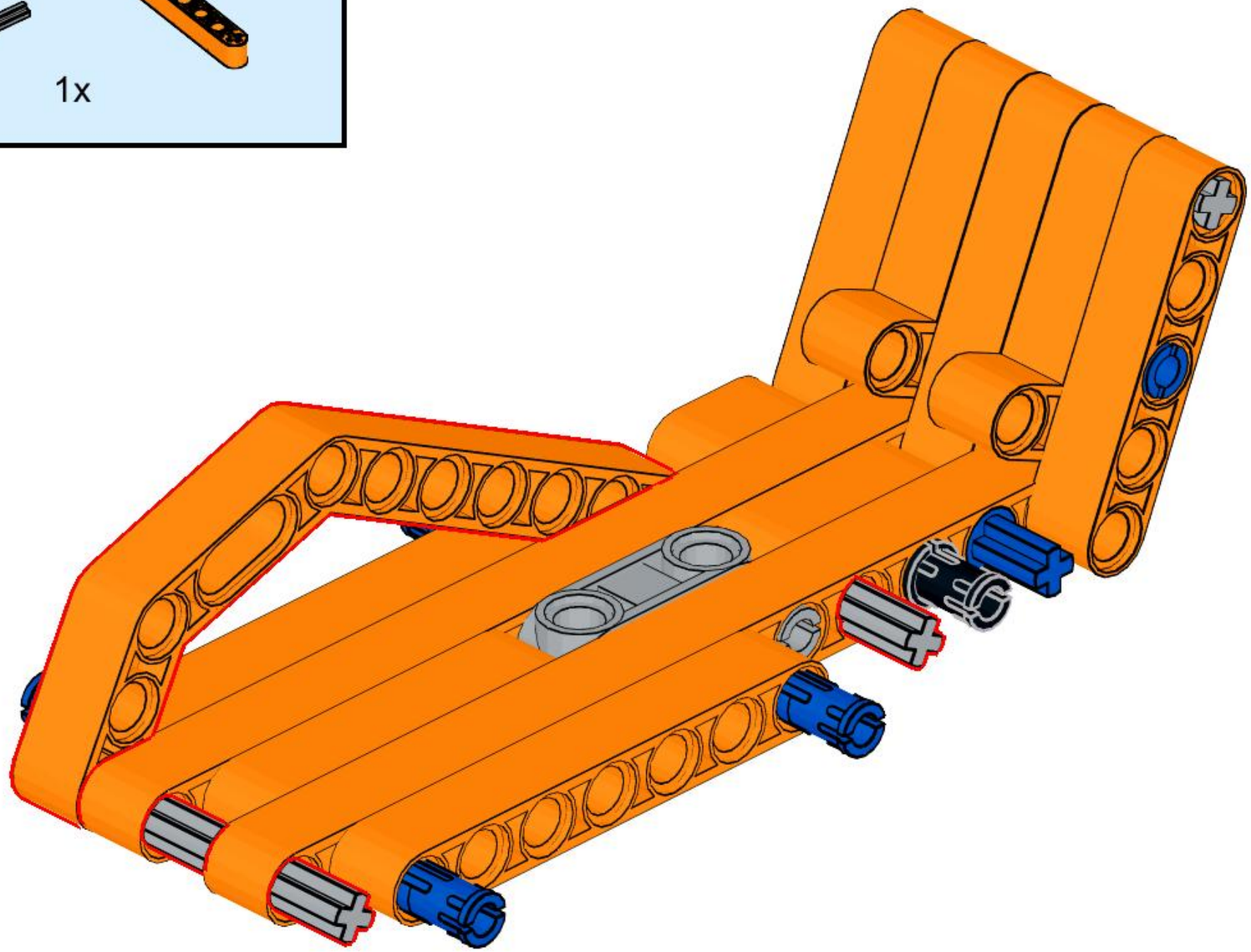

# 40

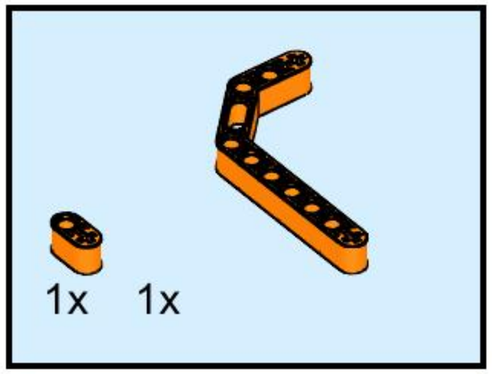


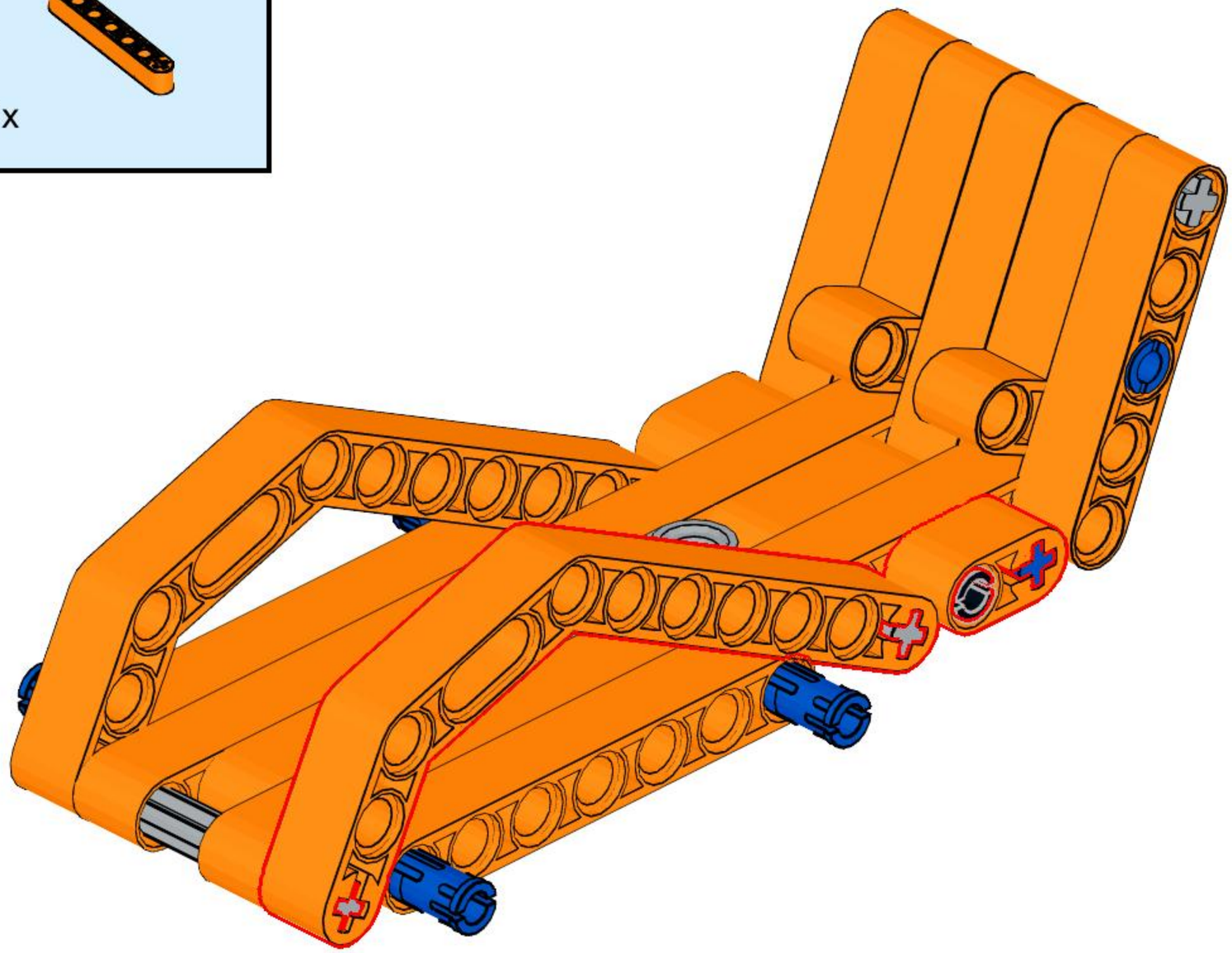

# 41

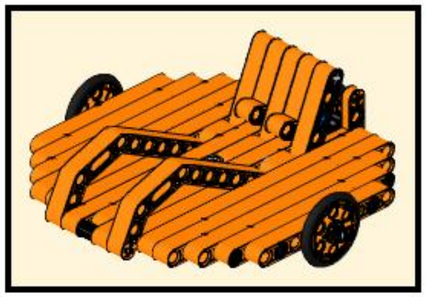

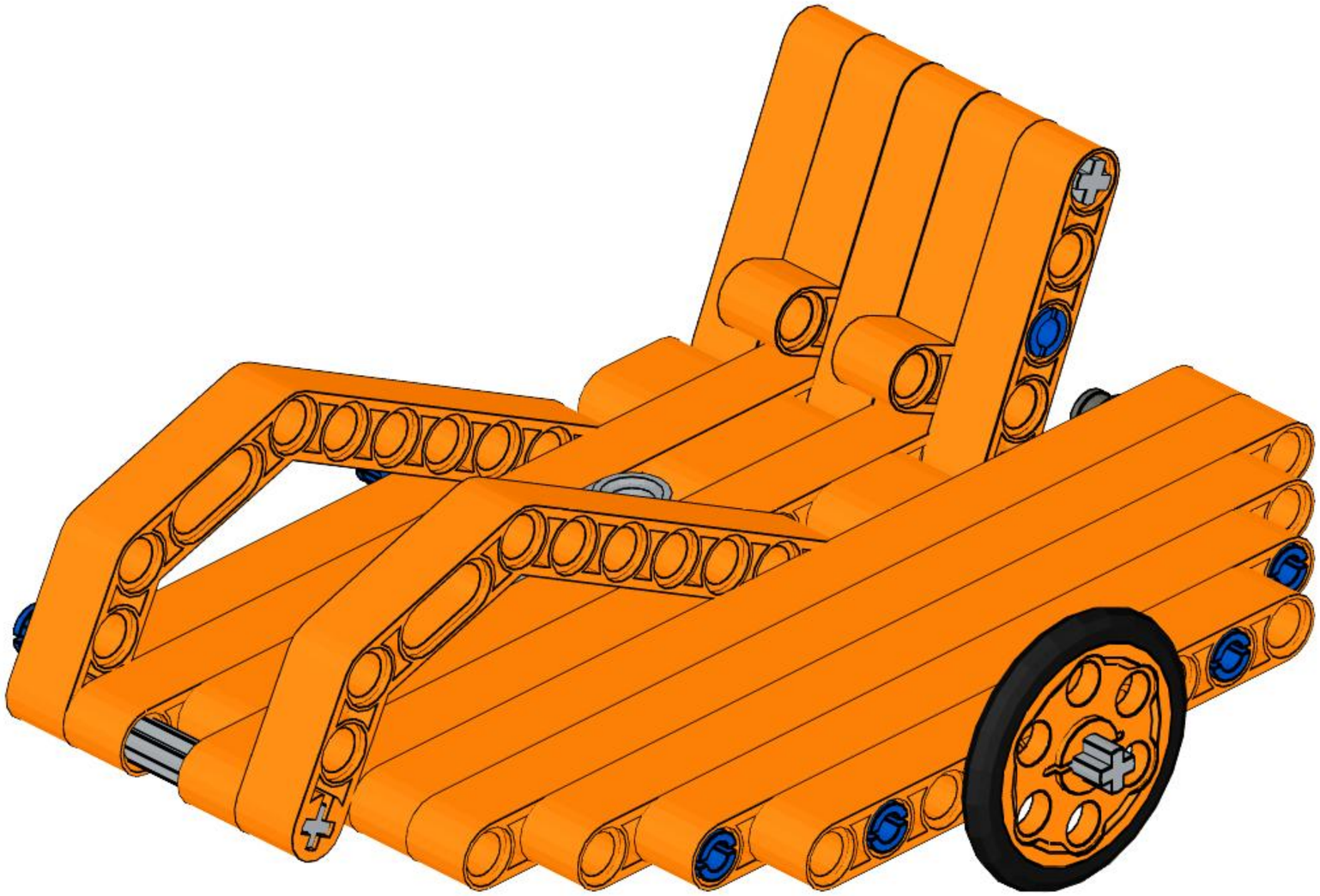

# 42

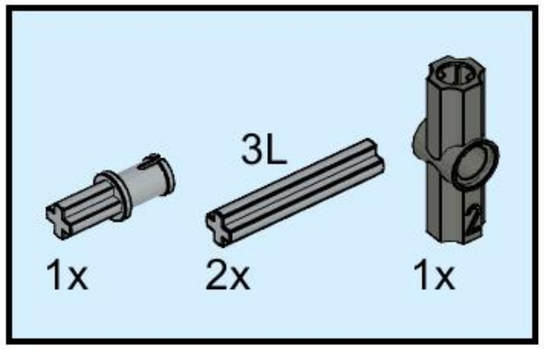


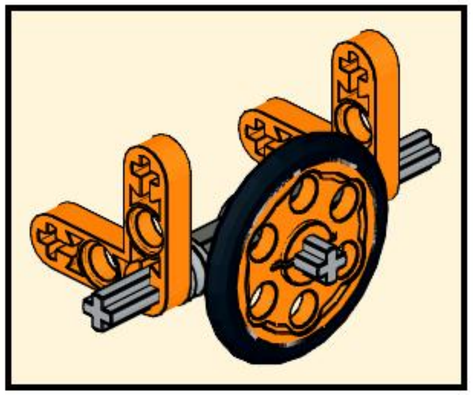

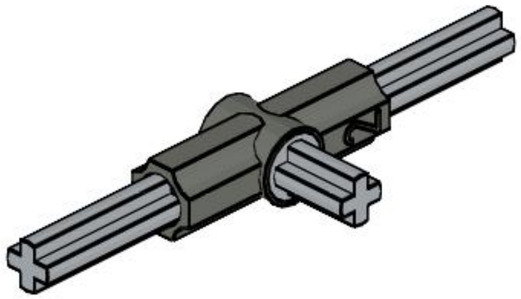

# 43

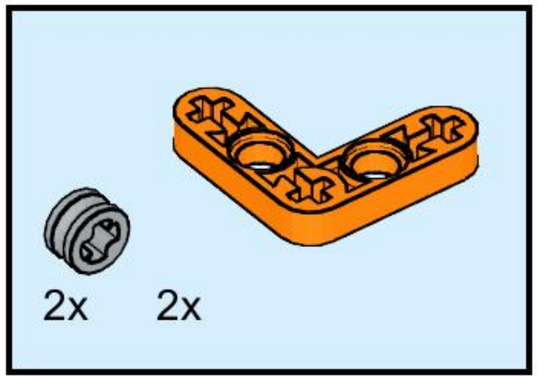


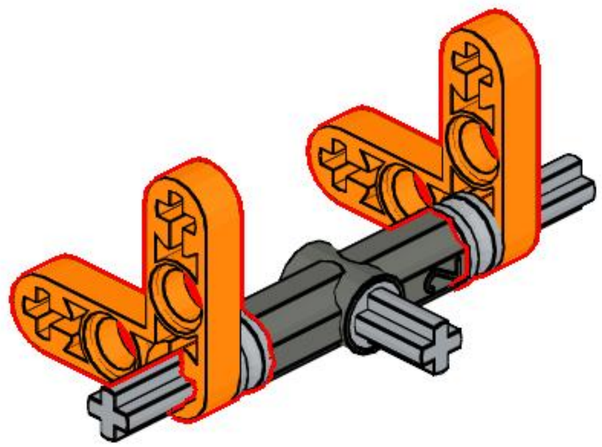

# 44

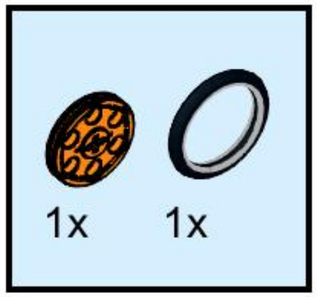


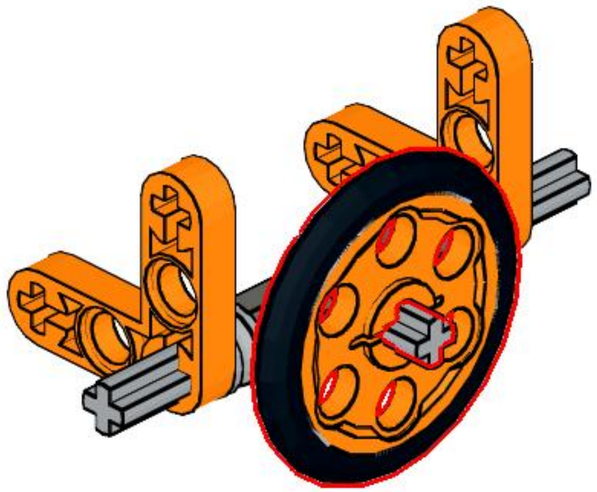

# 45

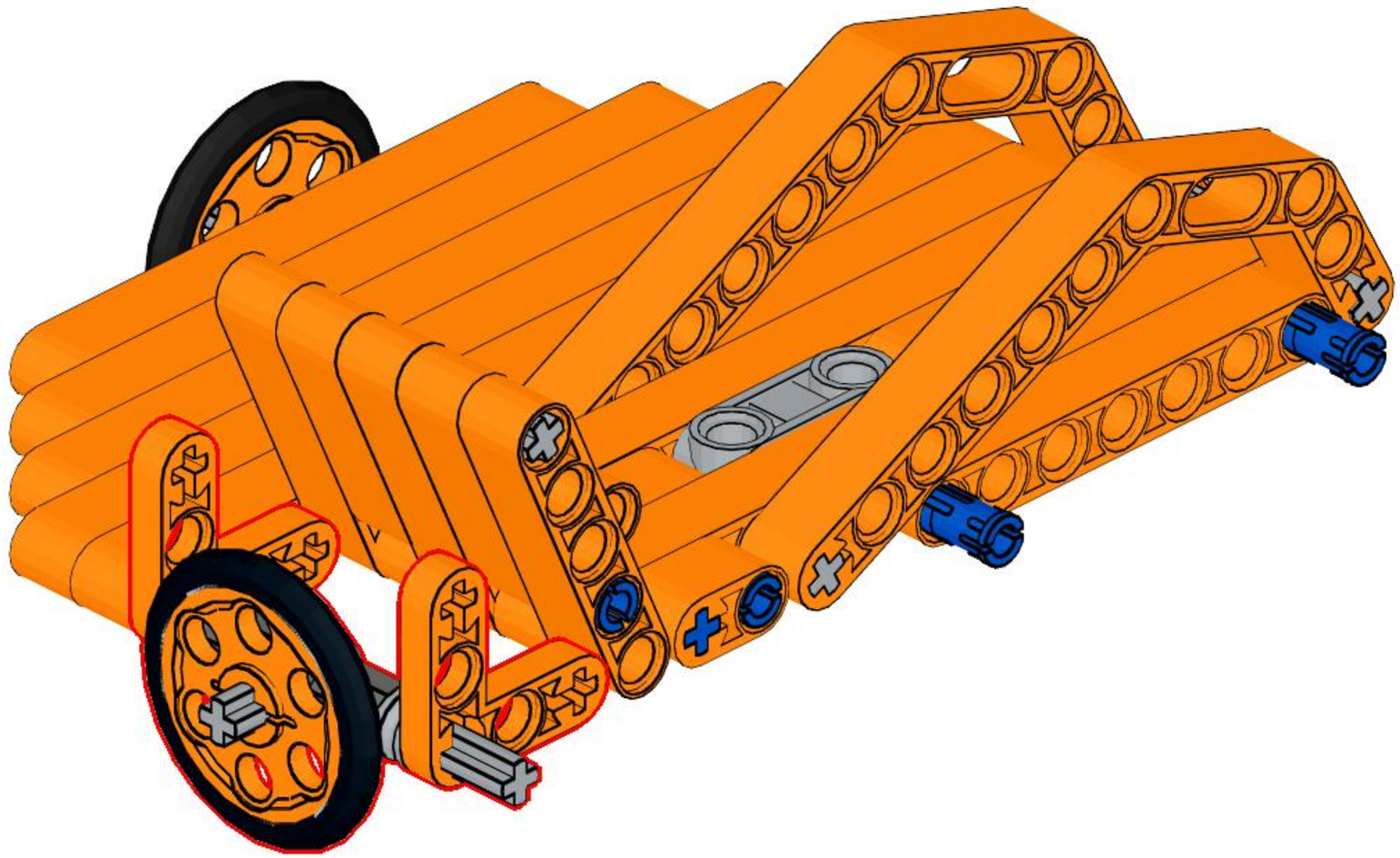

# 46

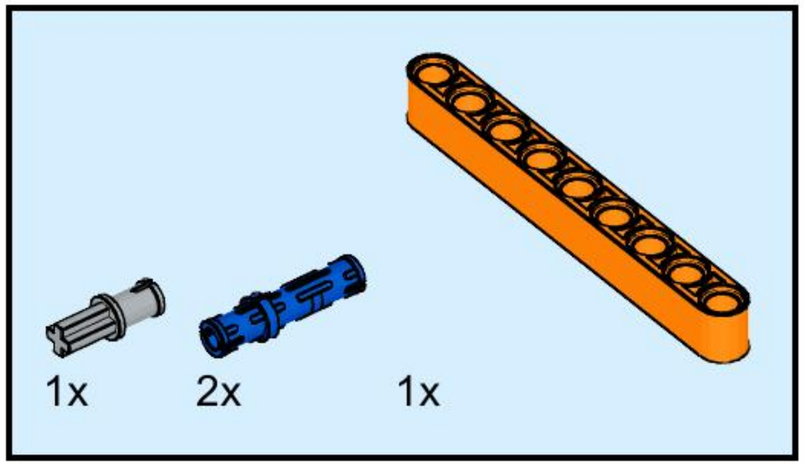


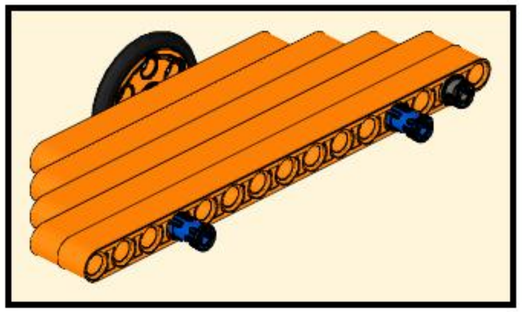

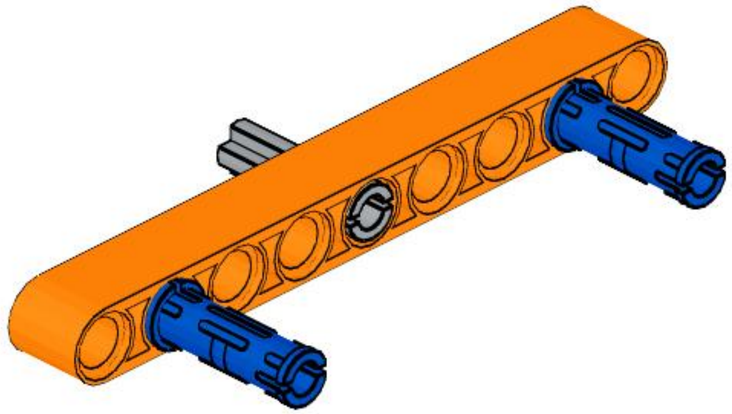

# 47

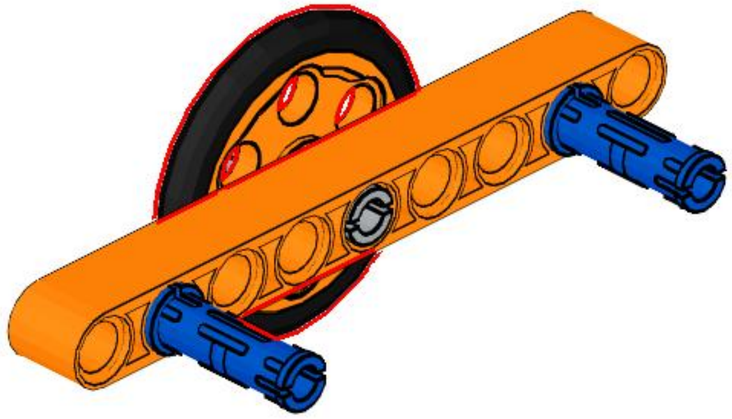

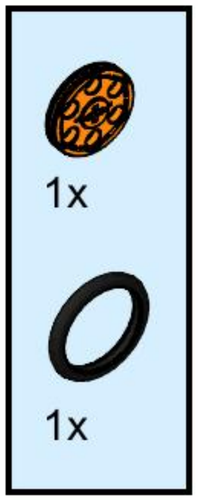

# 48

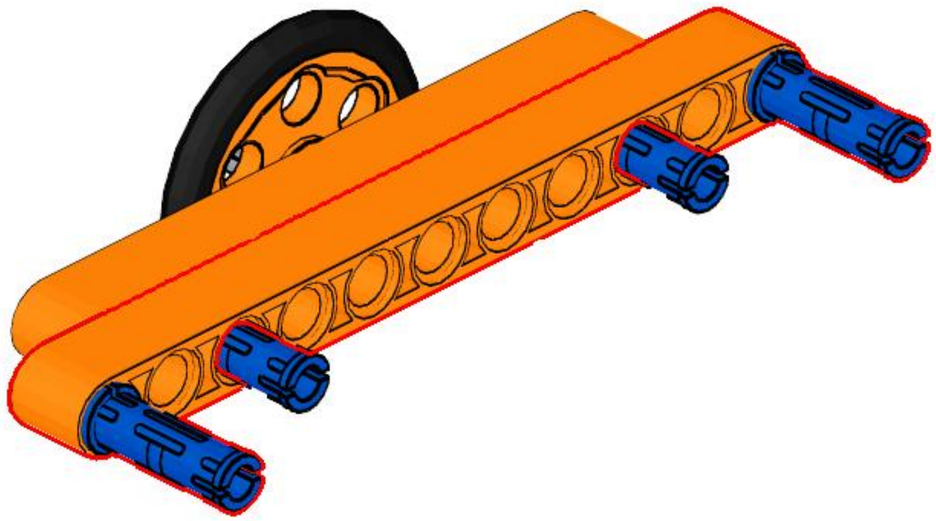

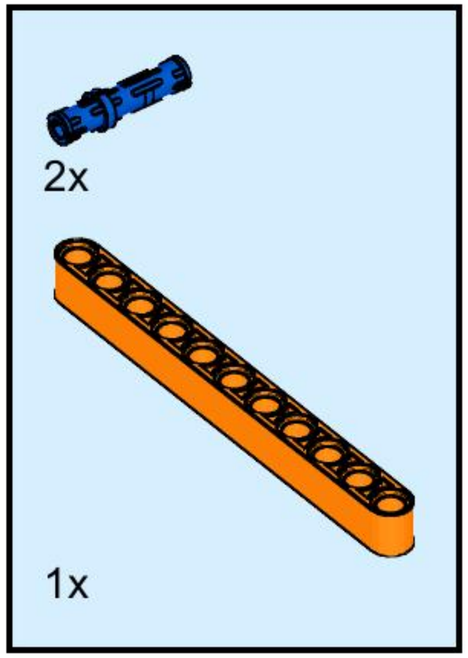

# 49

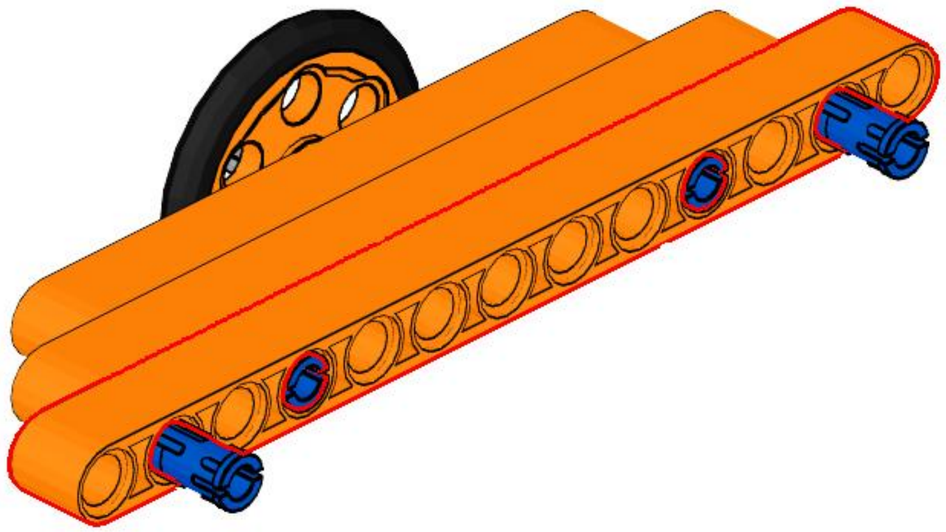

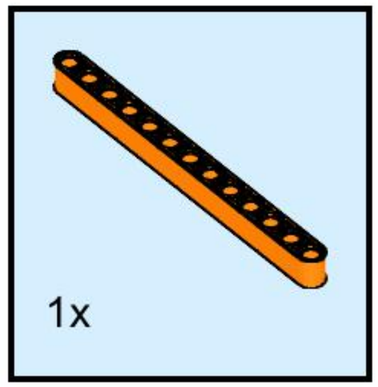

# 50

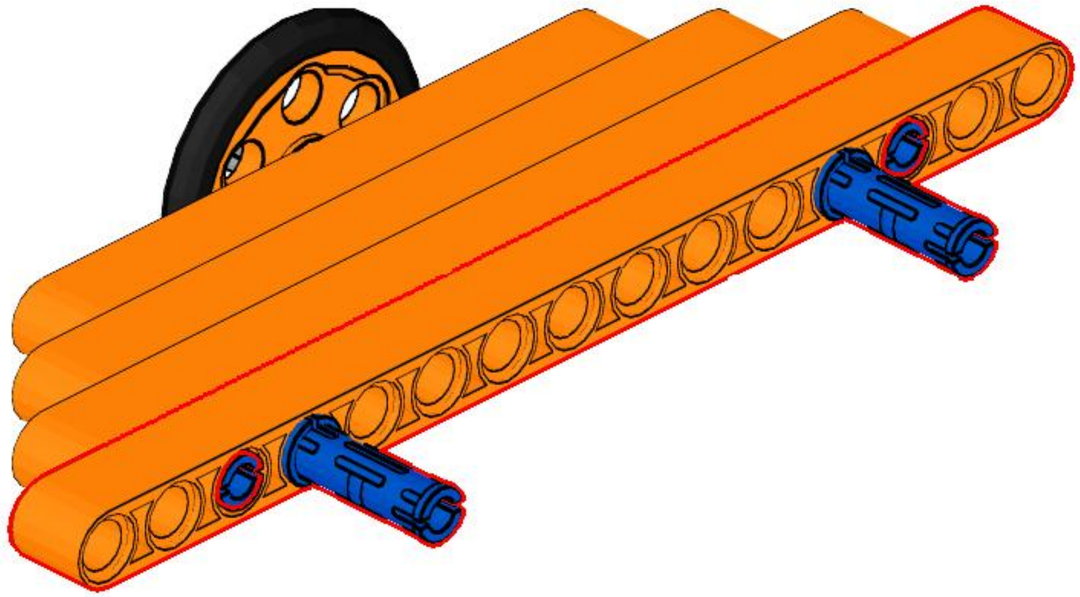

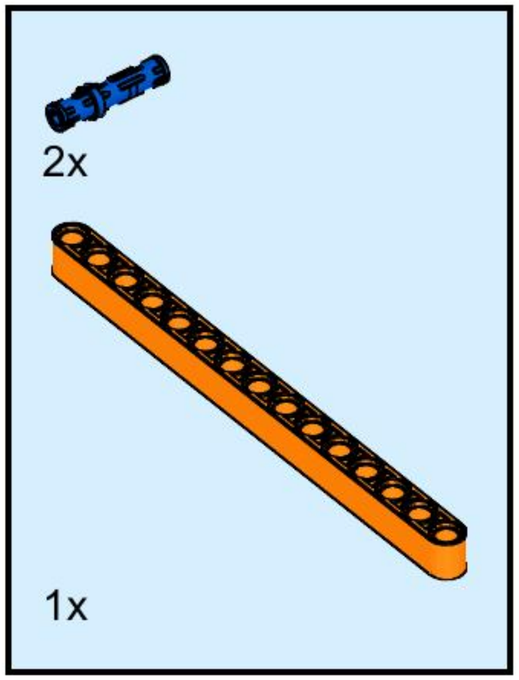

# 51

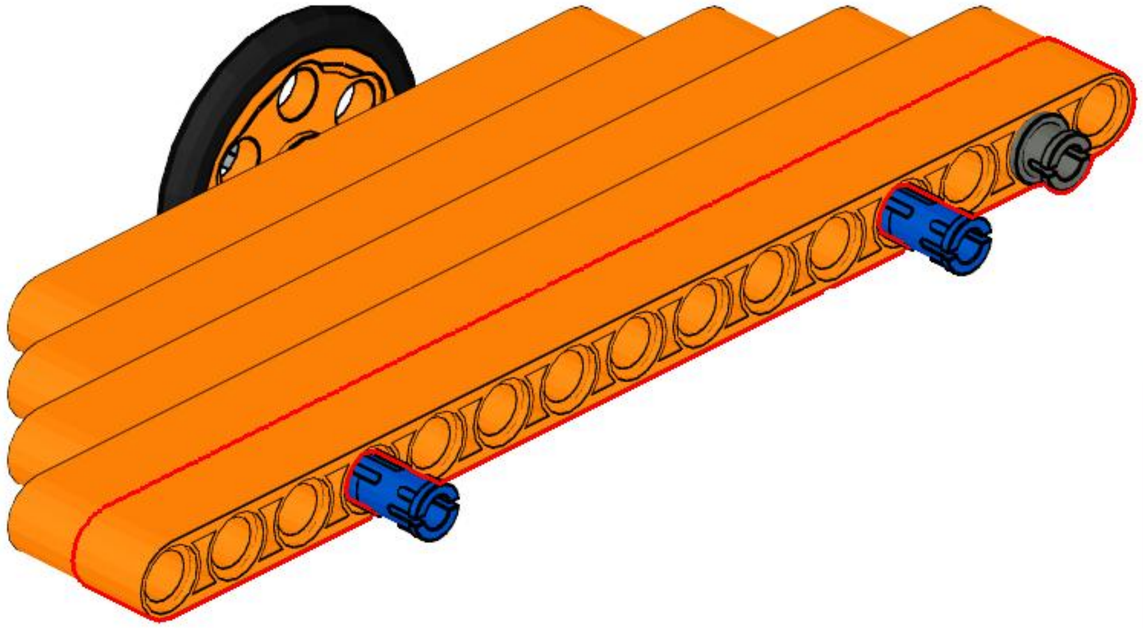

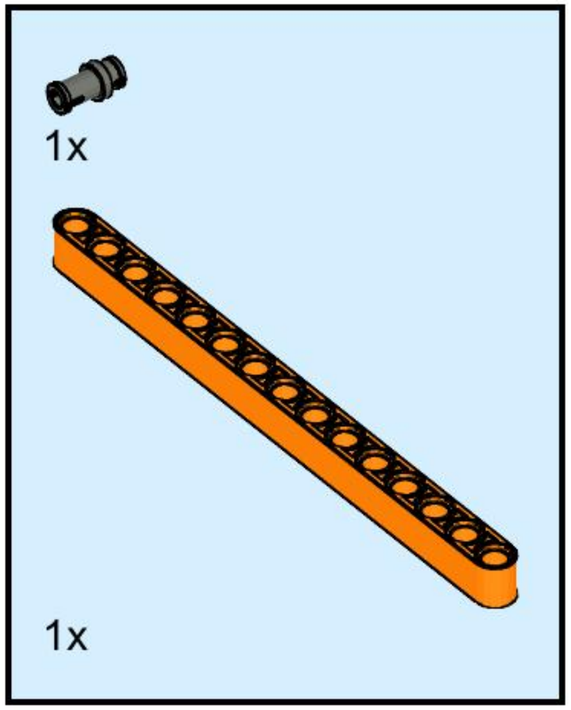

# 52

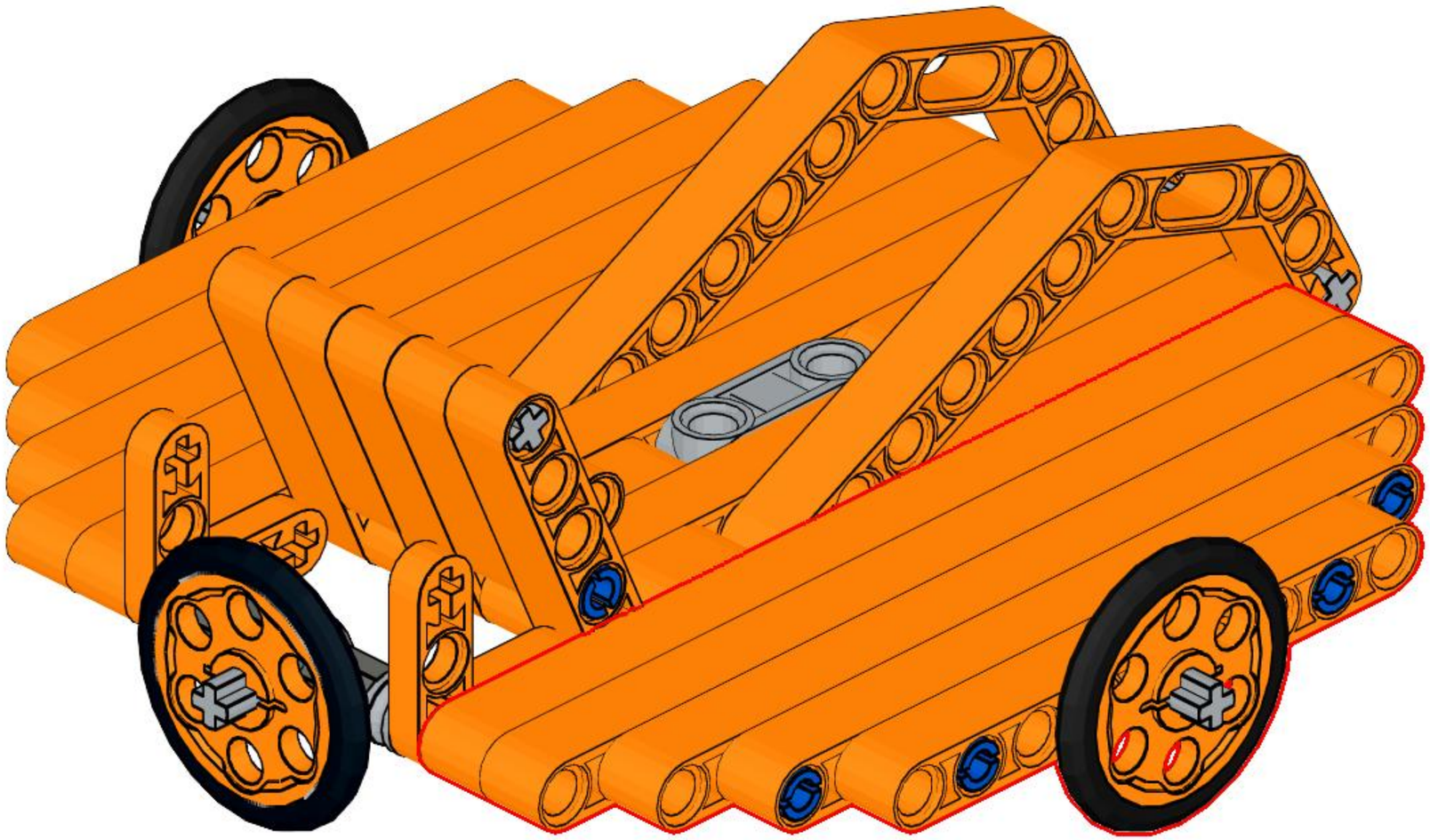

# 53

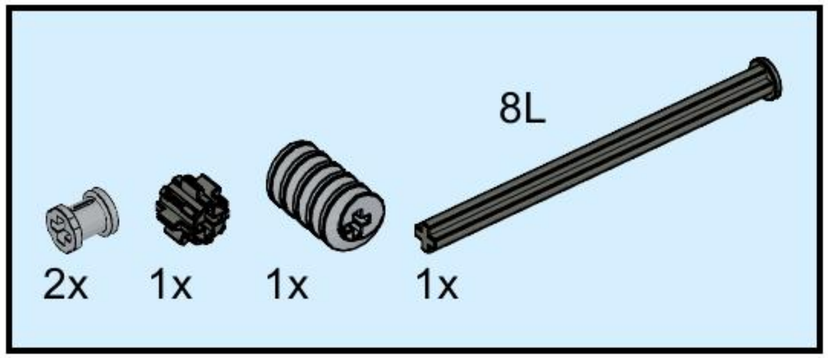


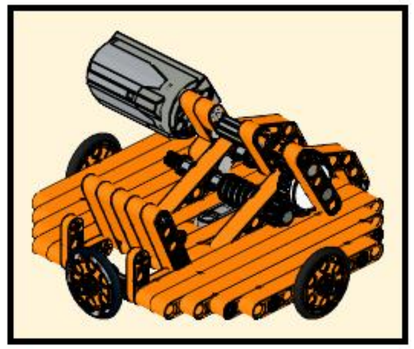

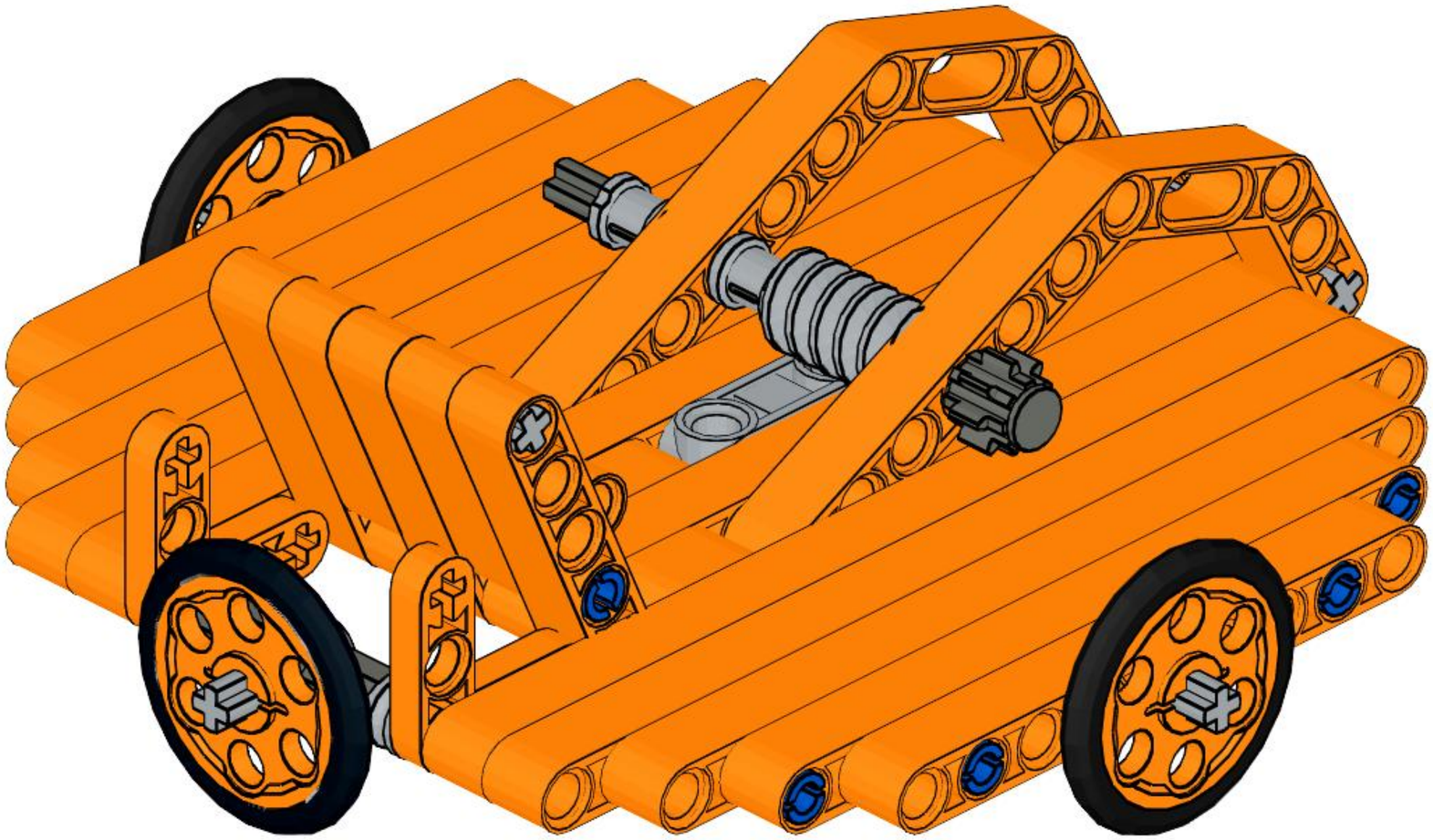

# 54

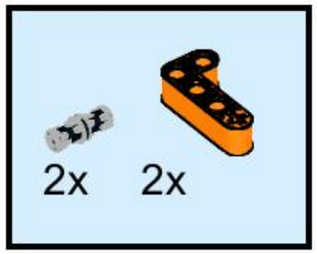

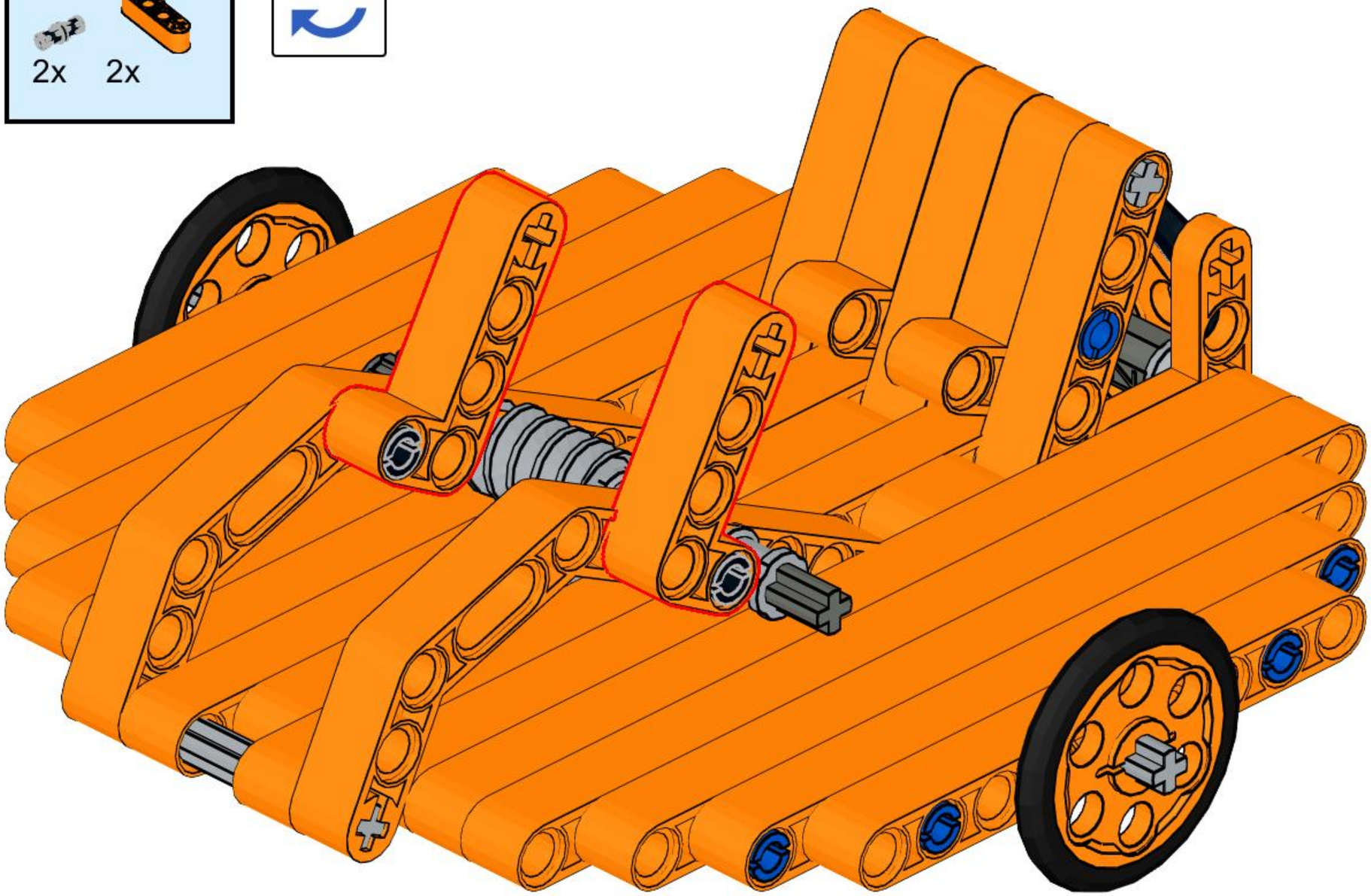

# 55

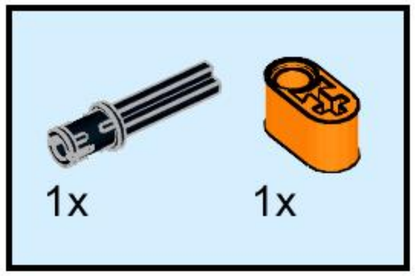


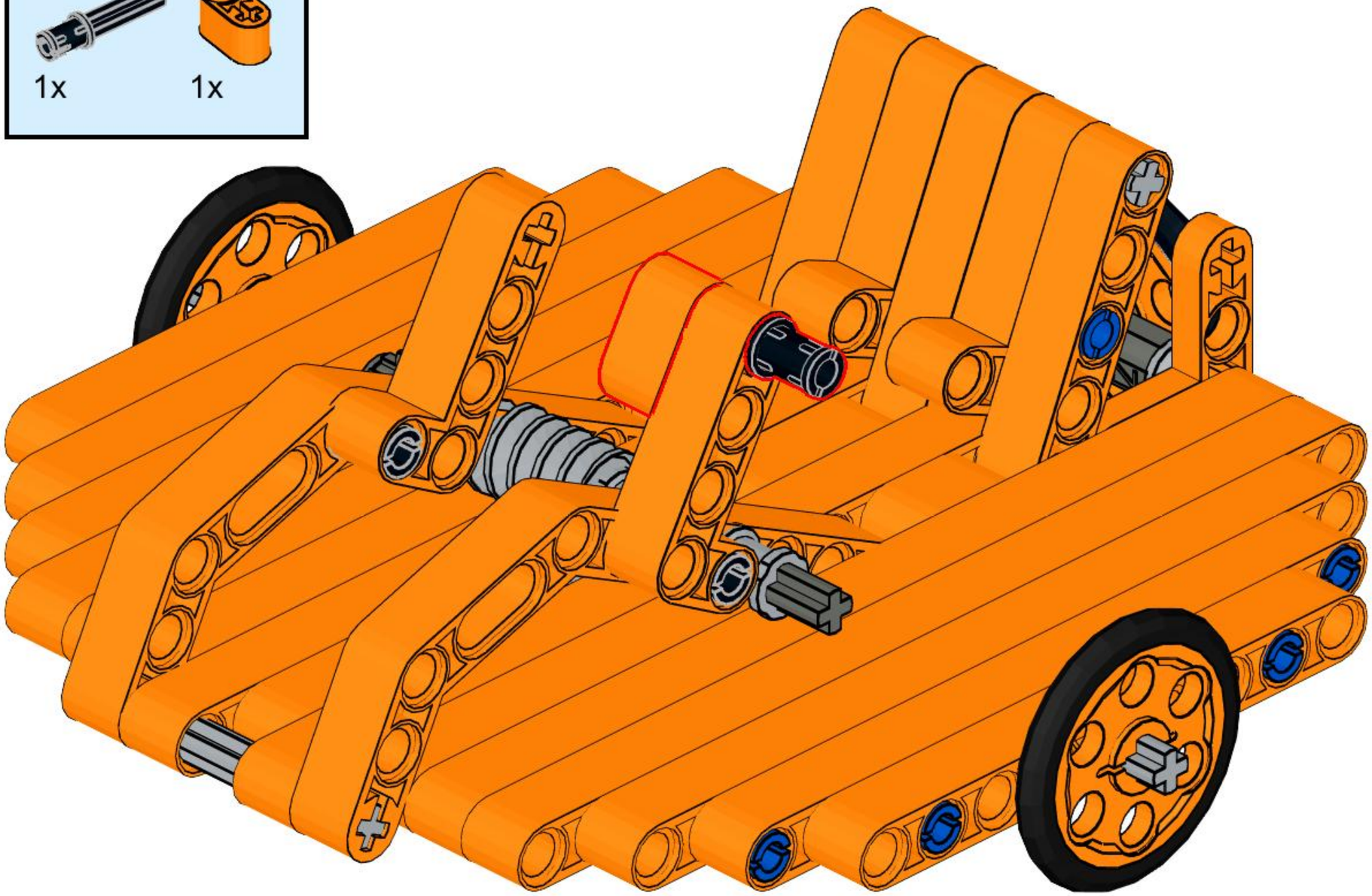

# 56

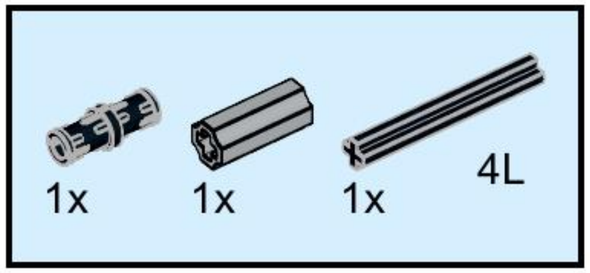


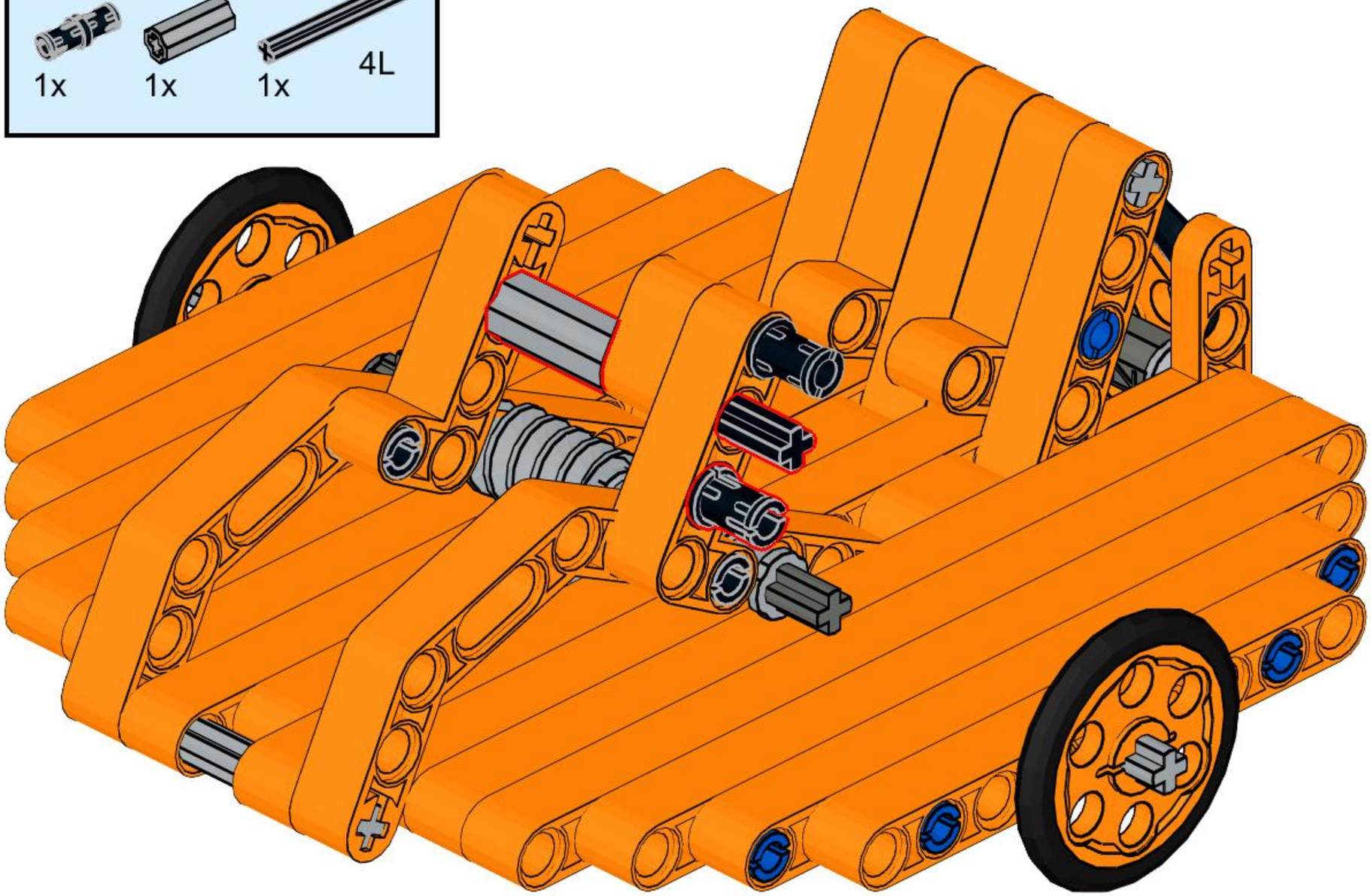

# 57

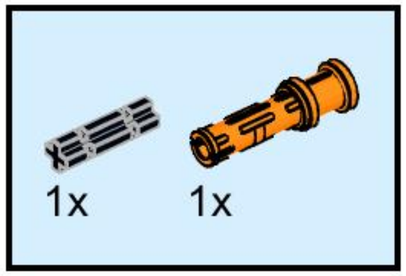


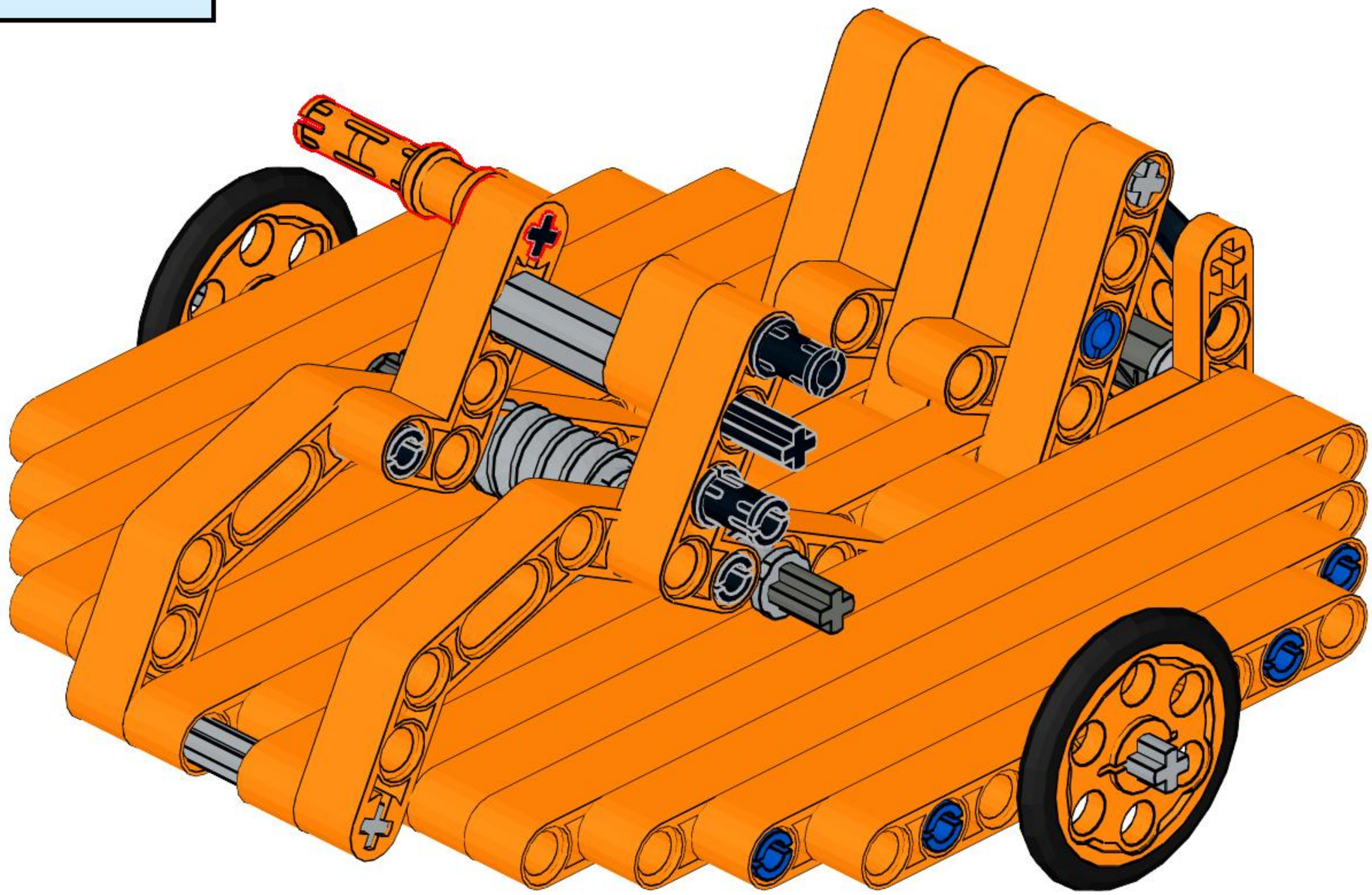

# 58

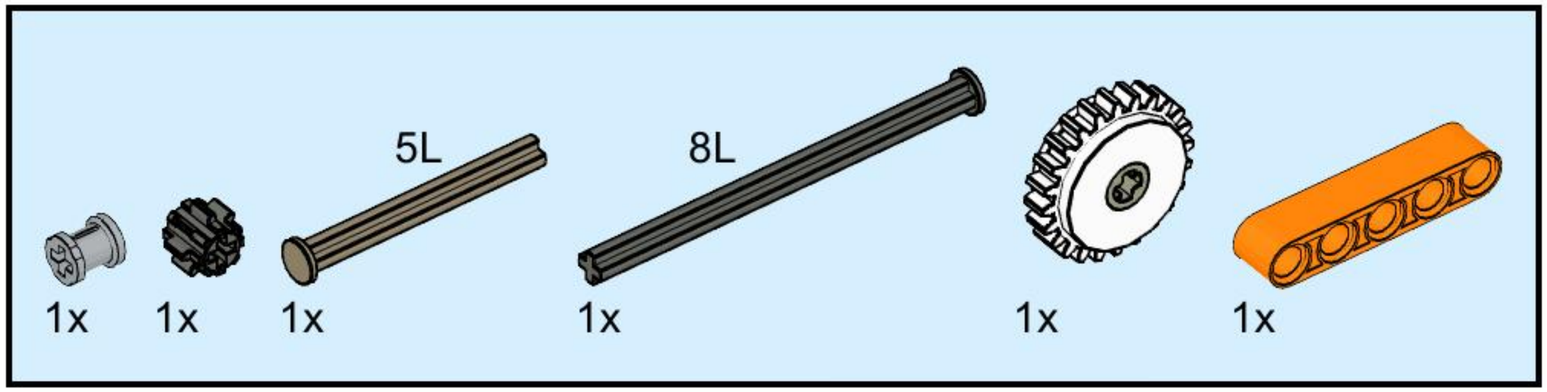


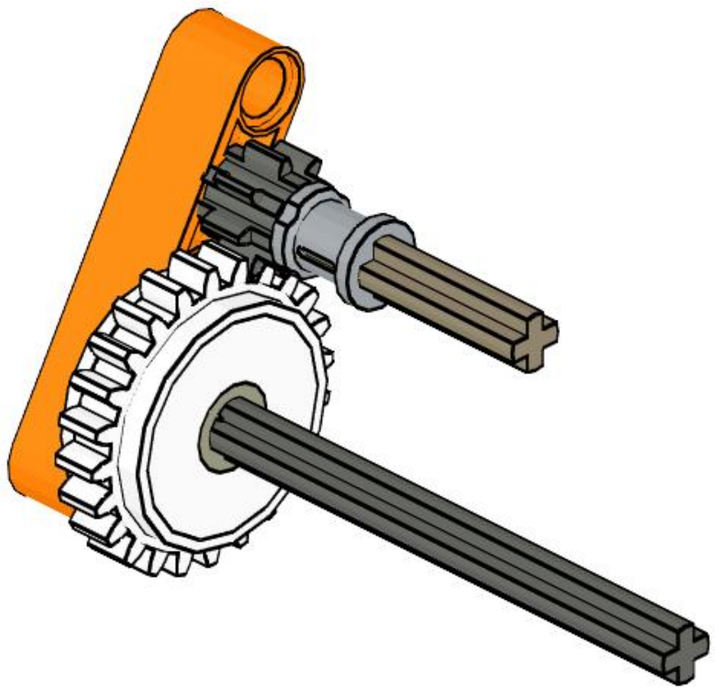

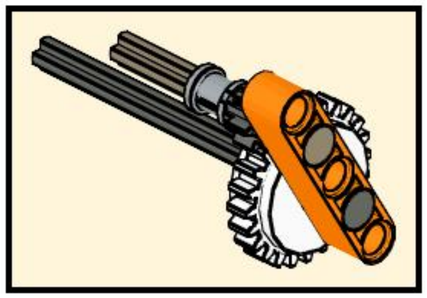

# 59

2x

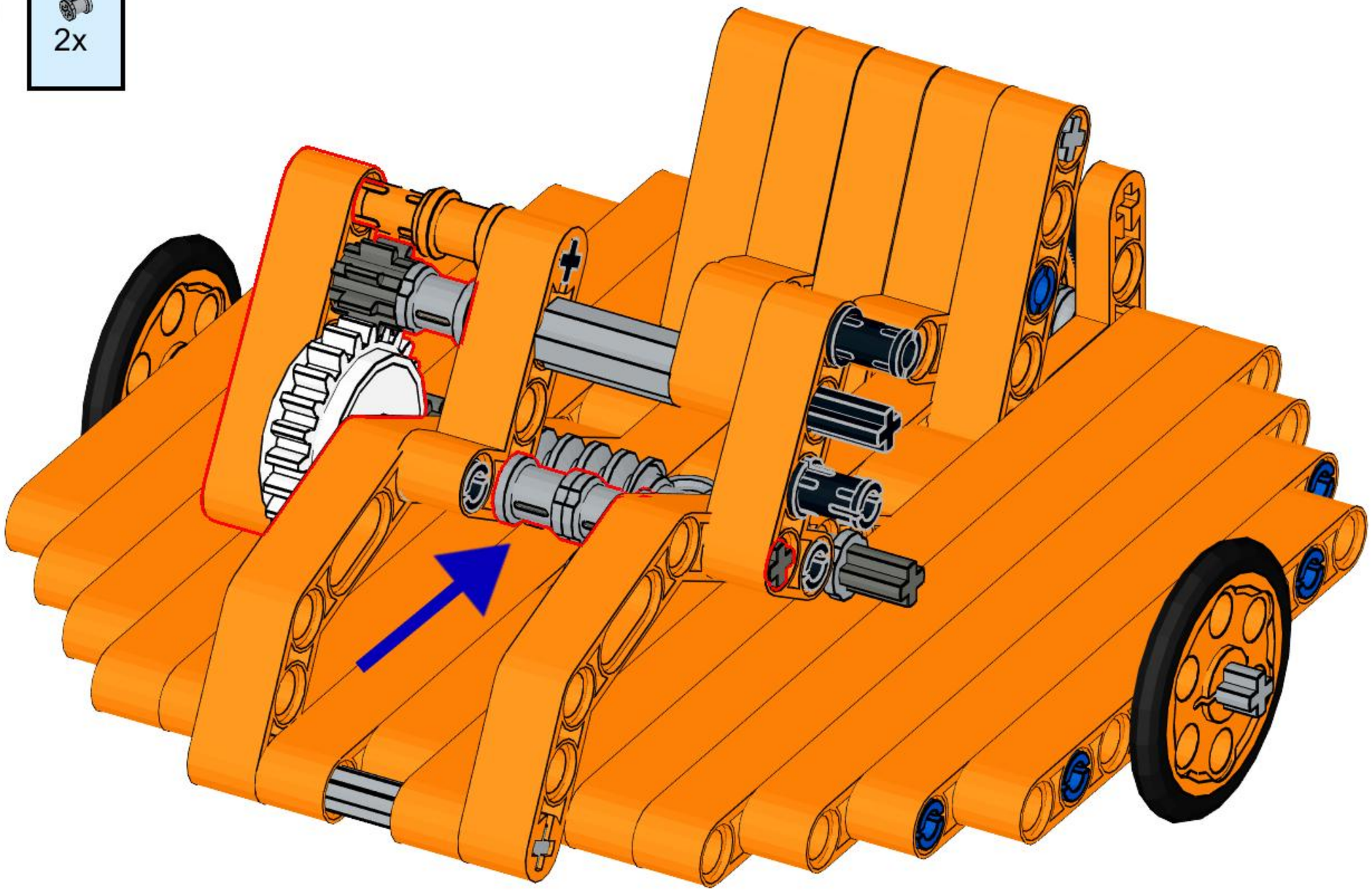

# 60

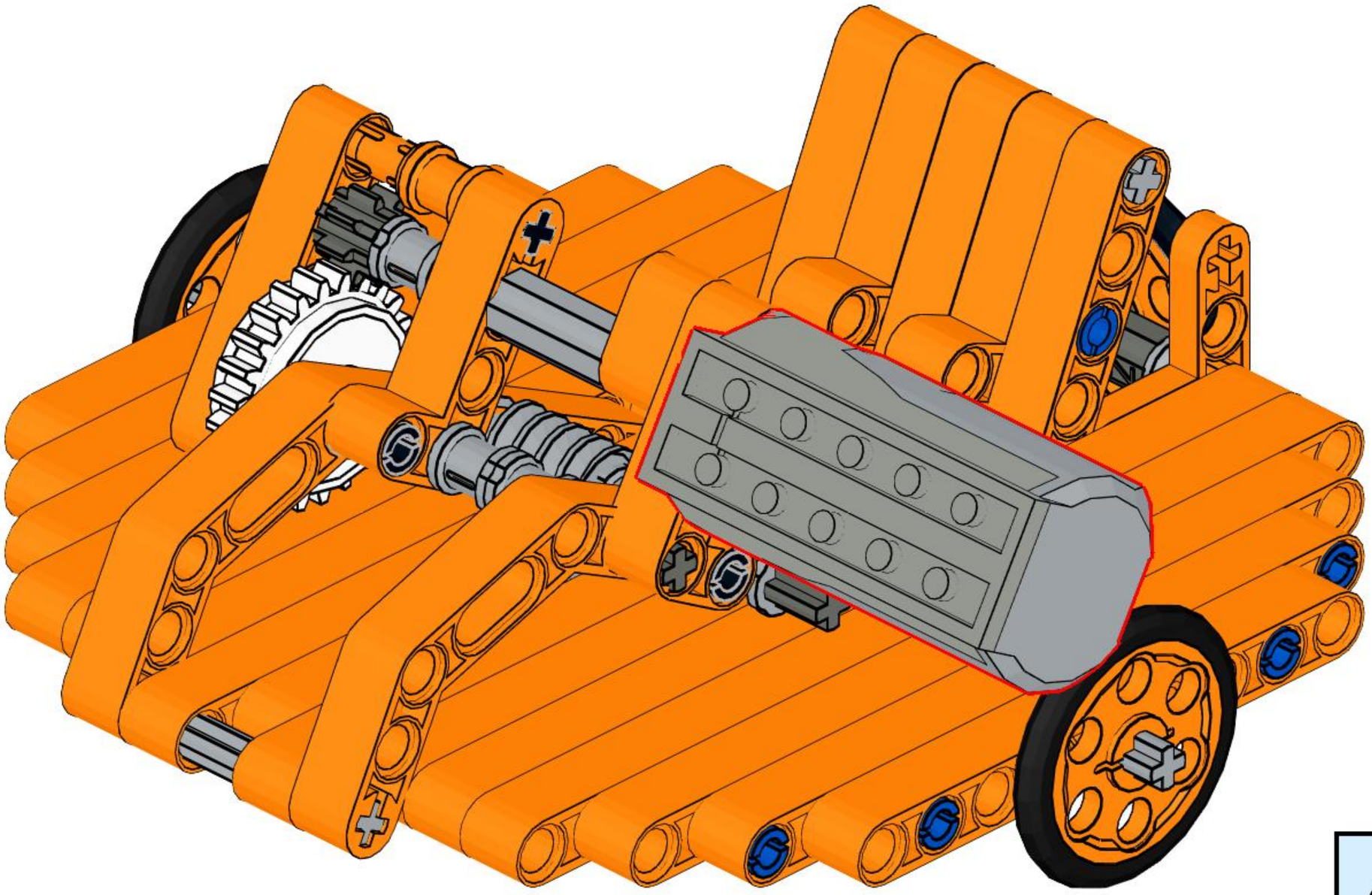

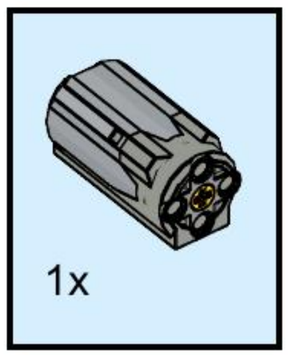

# 61

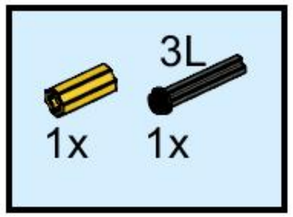


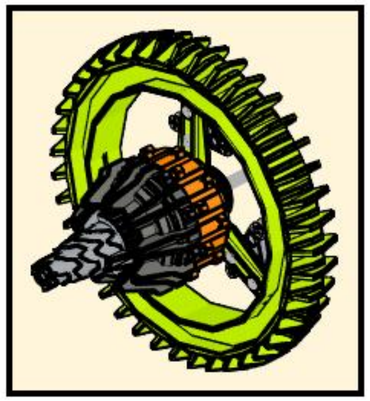

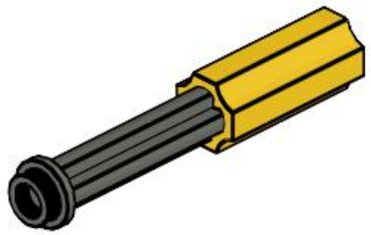

# 62

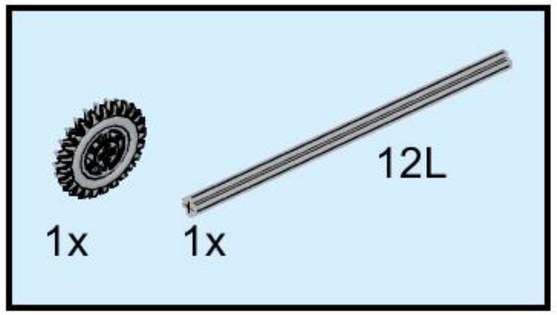


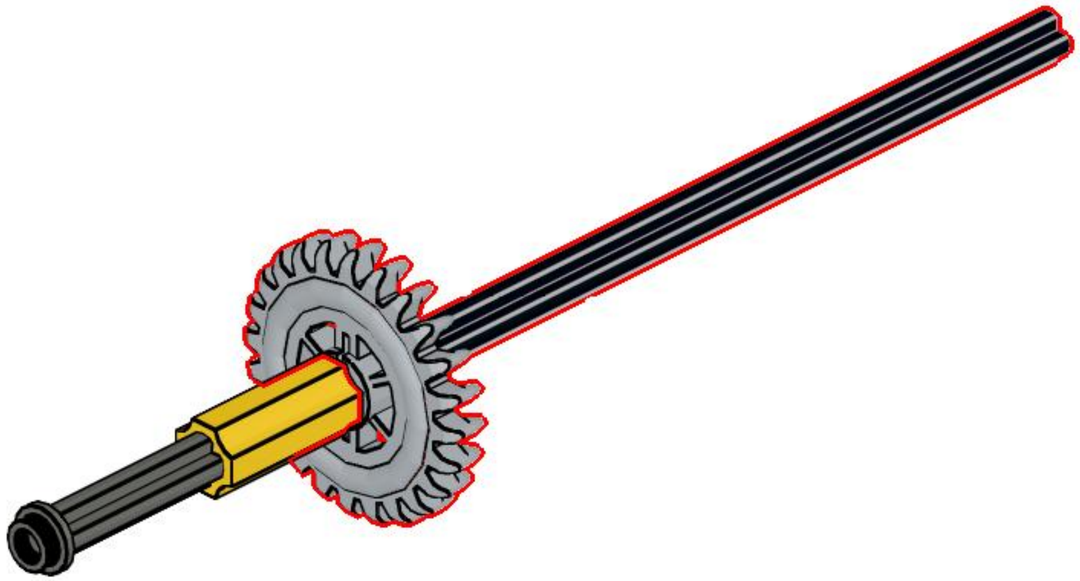

# 63

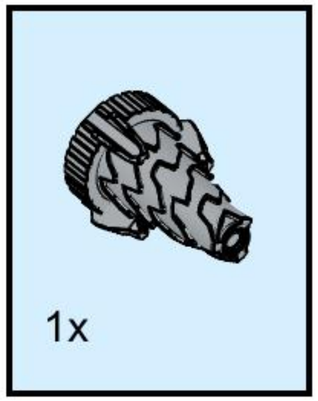


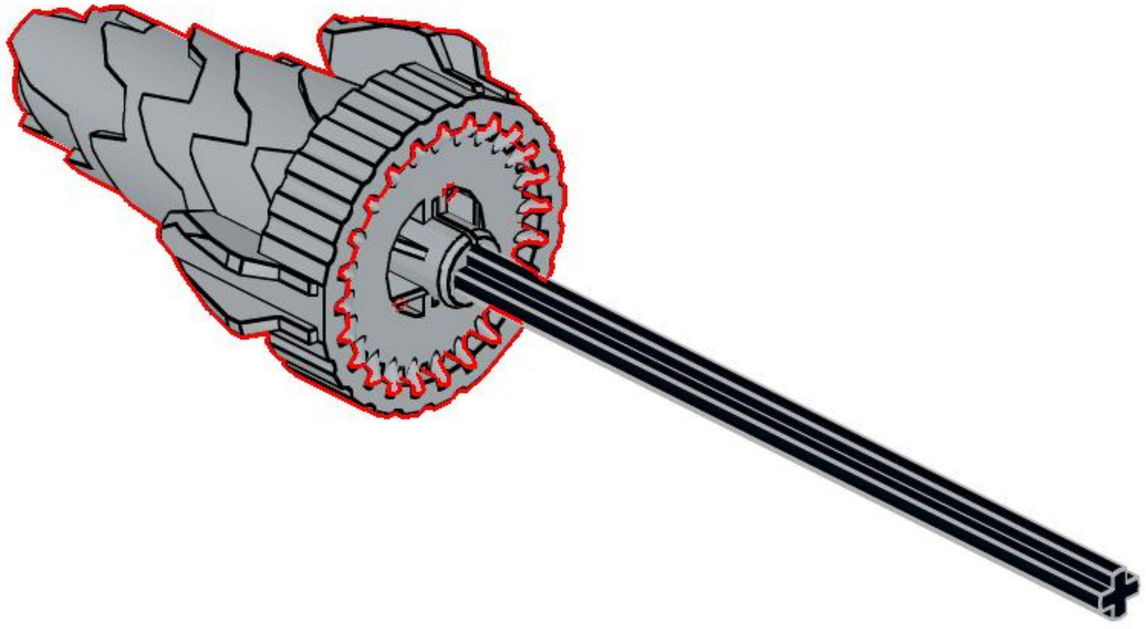

# 64

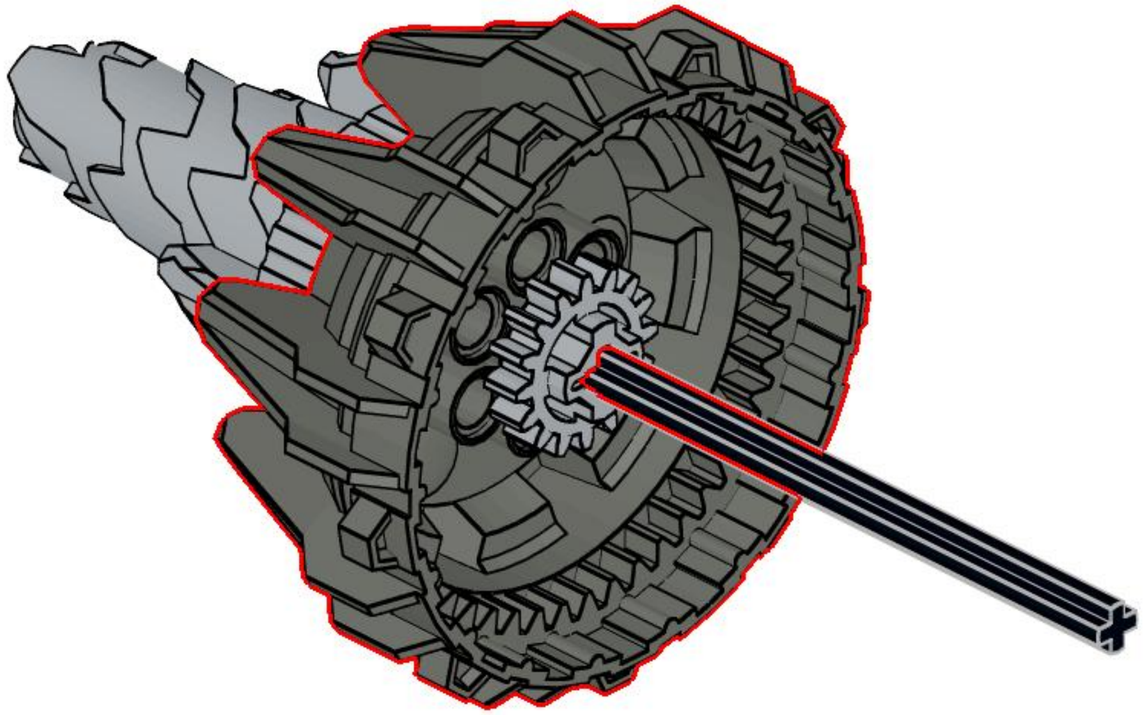

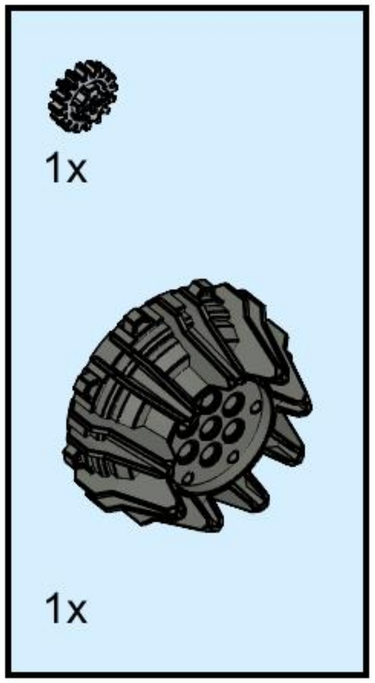

# 65

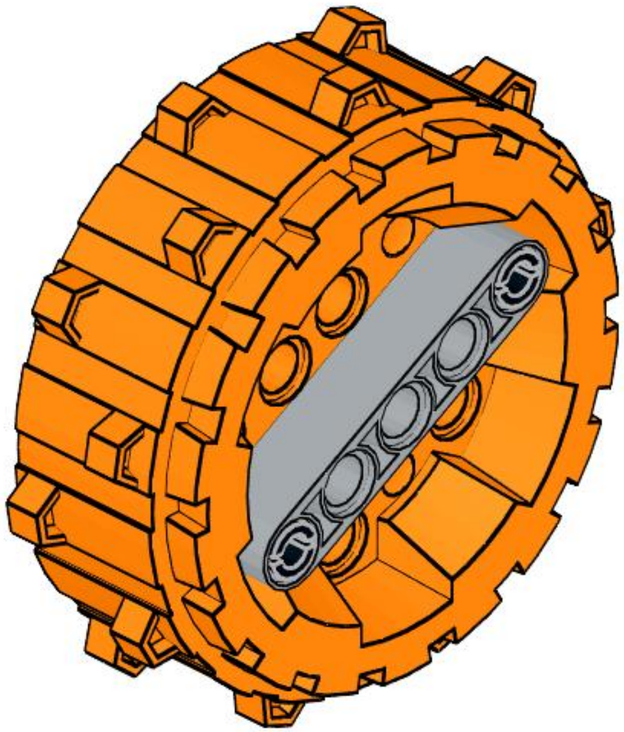

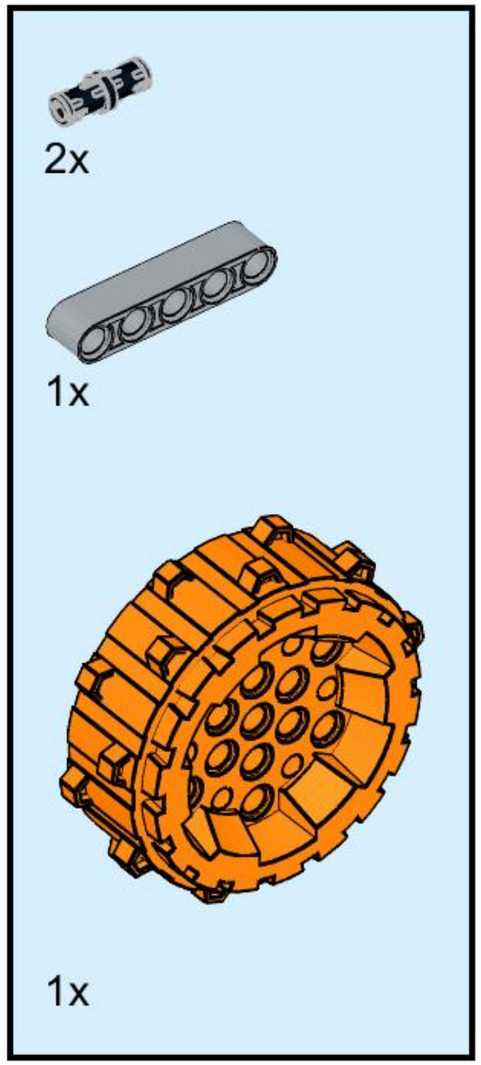


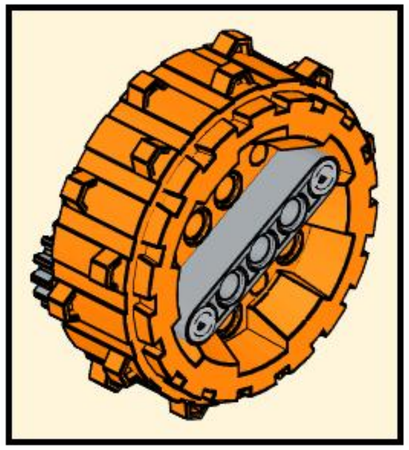

# 66

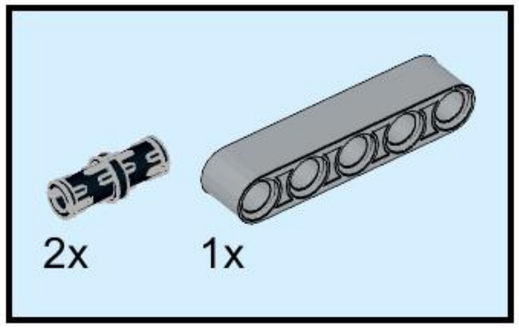


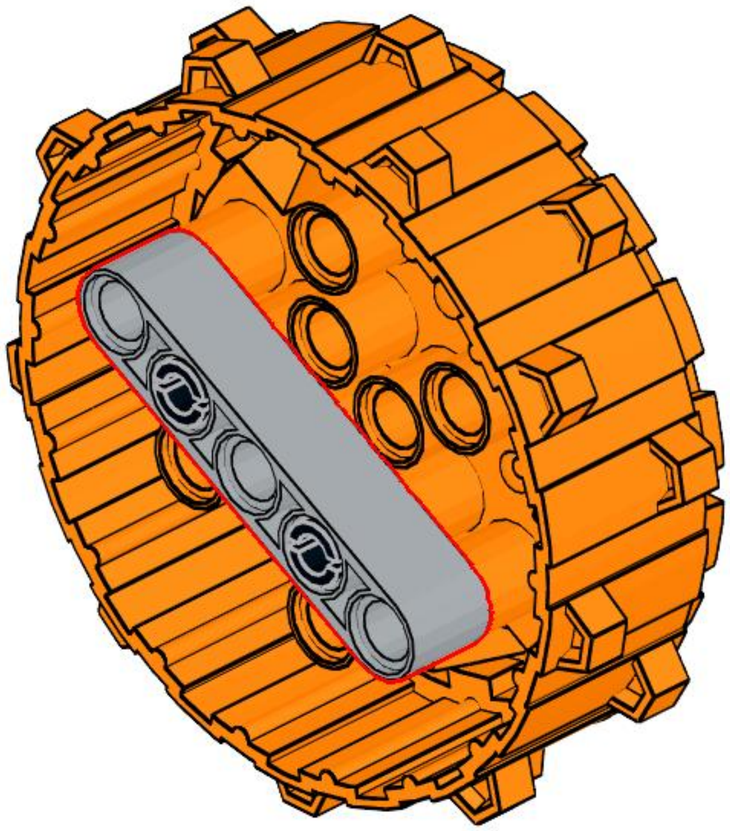

# 67

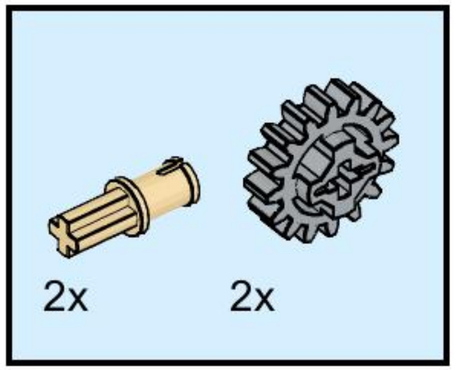


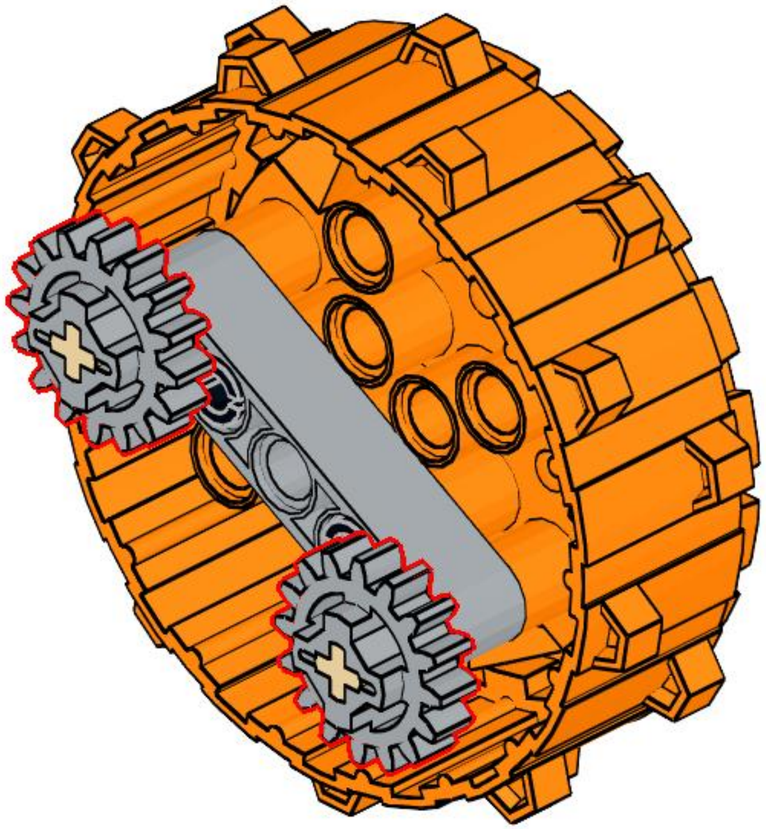

68

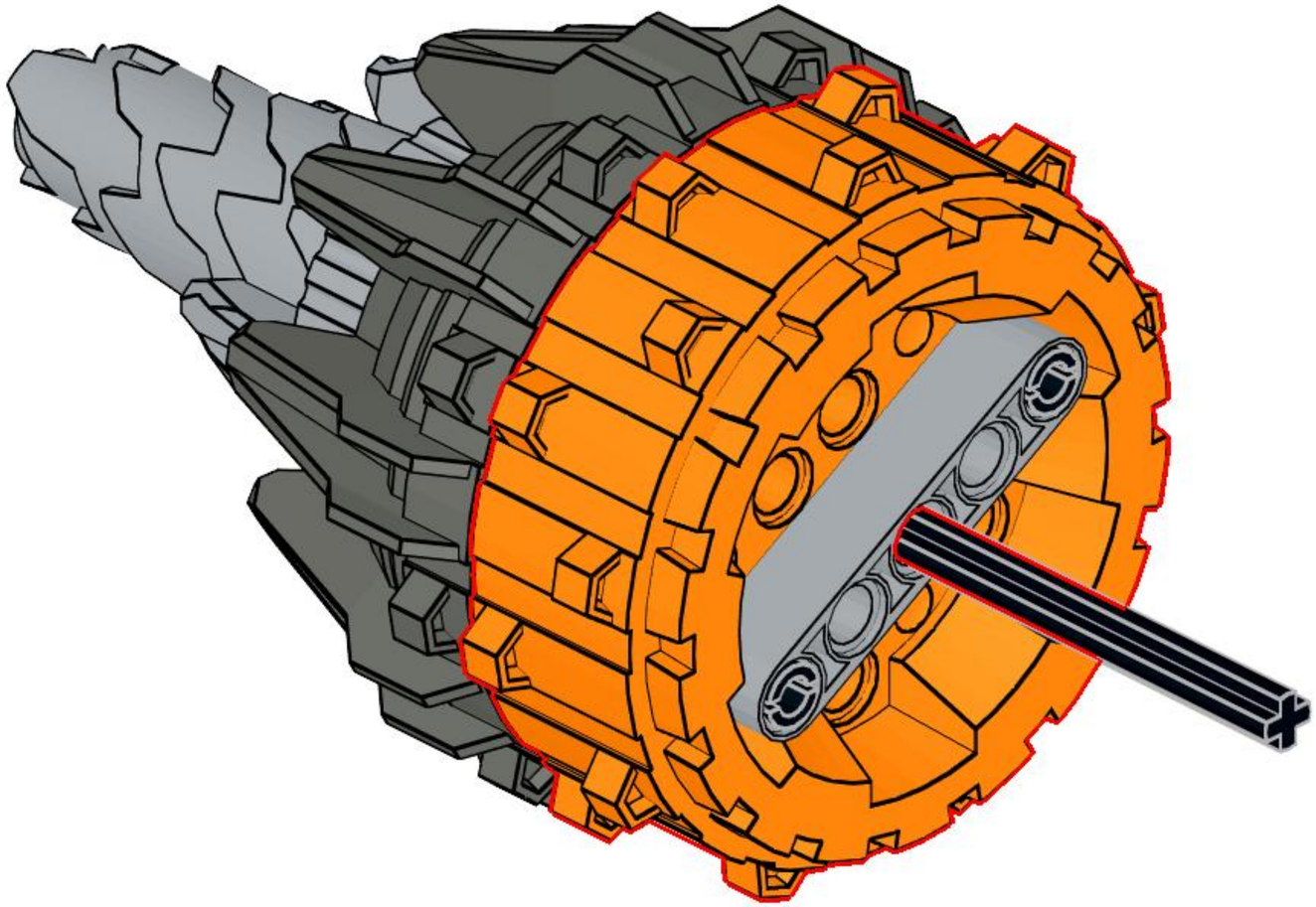

# 69

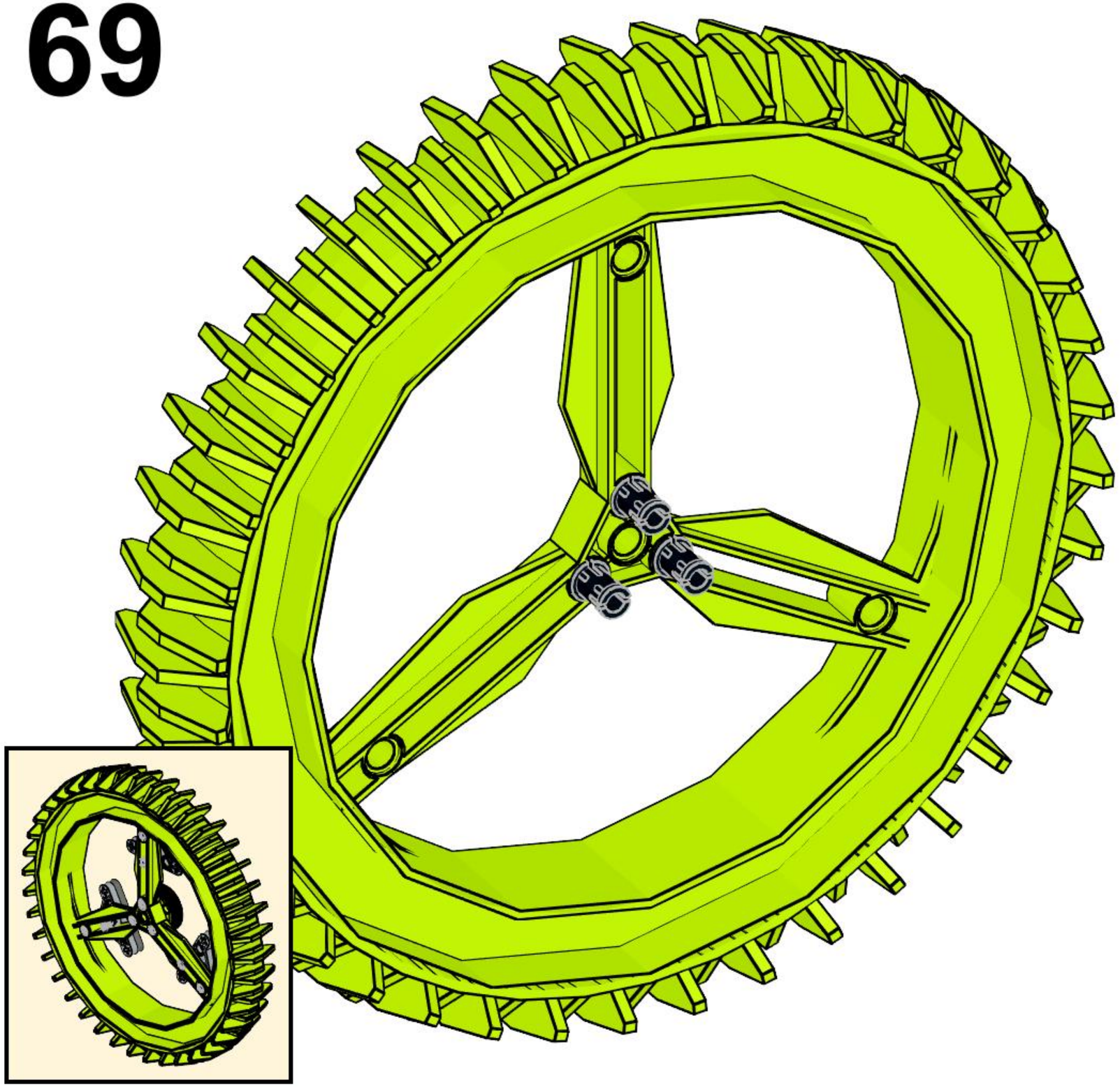

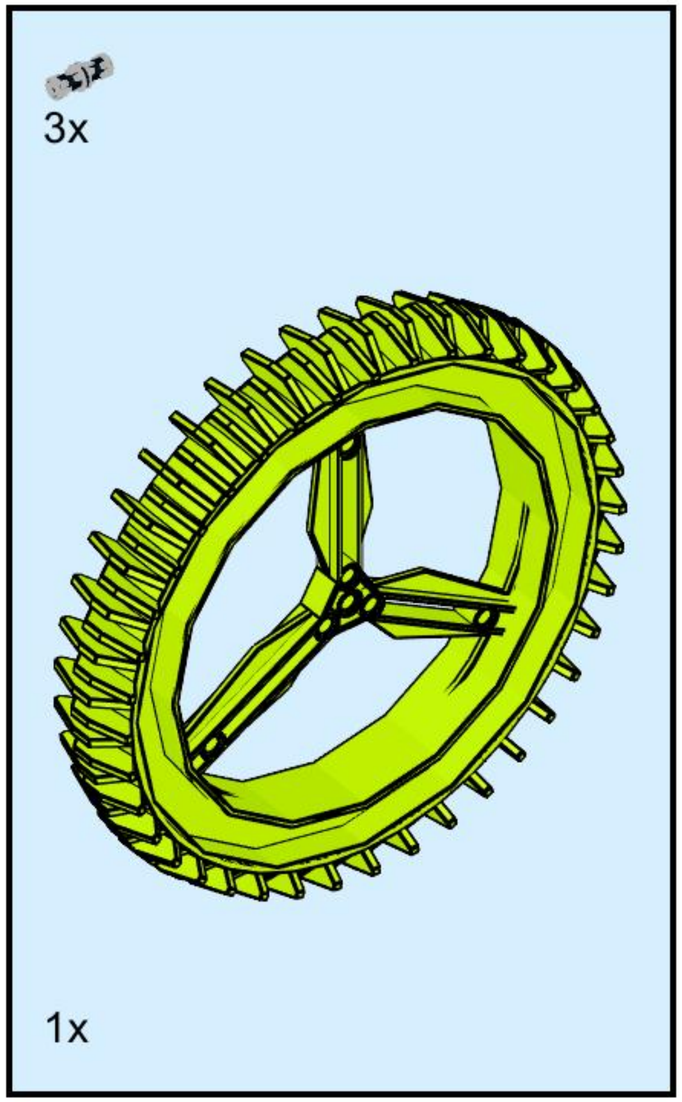

# 70




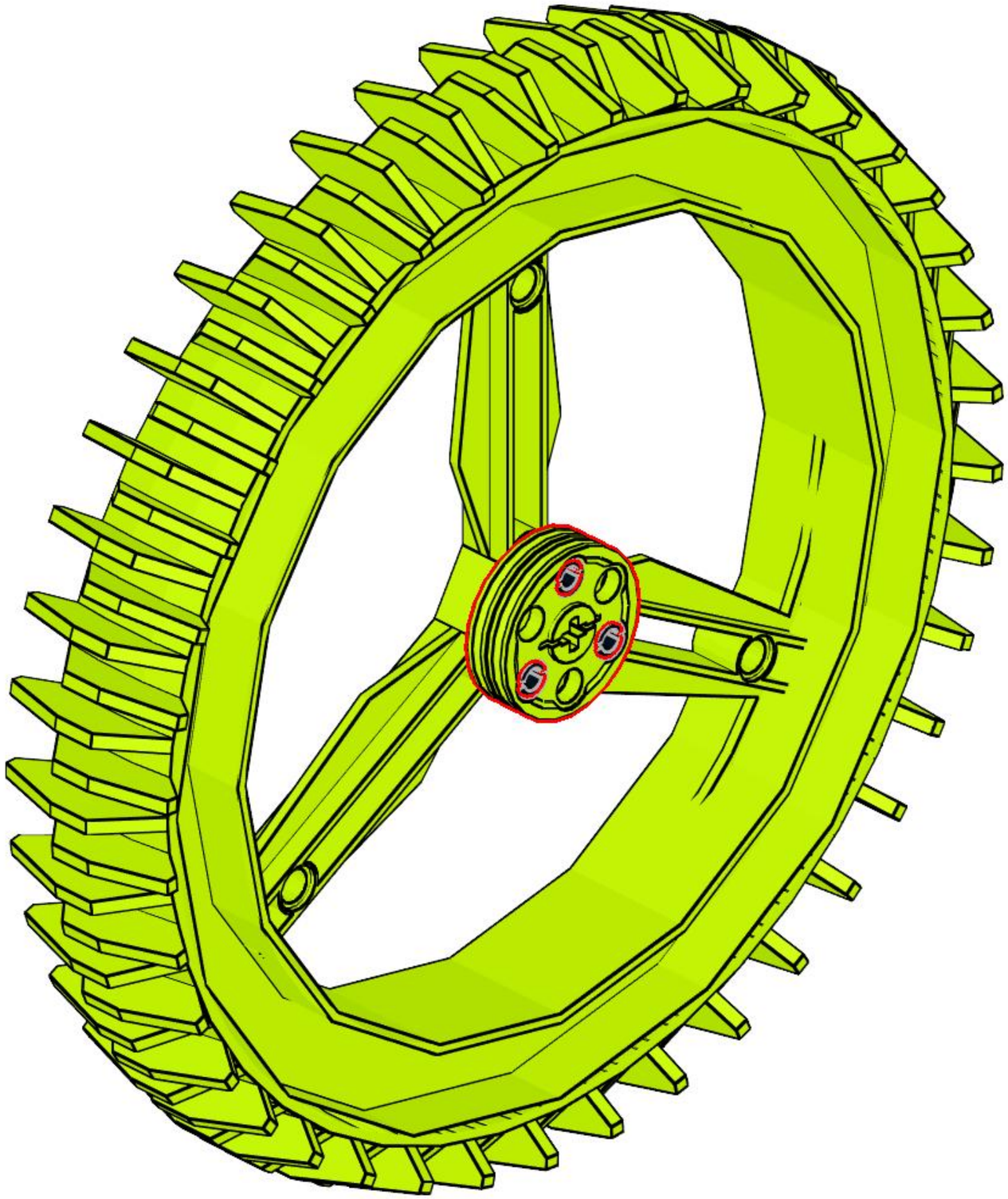

# 71

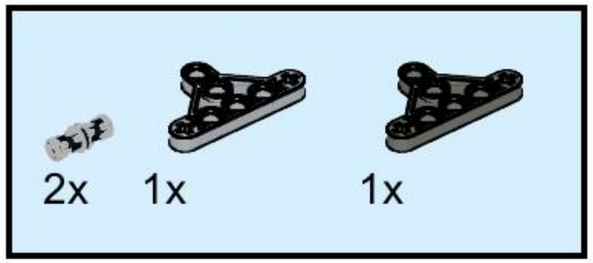


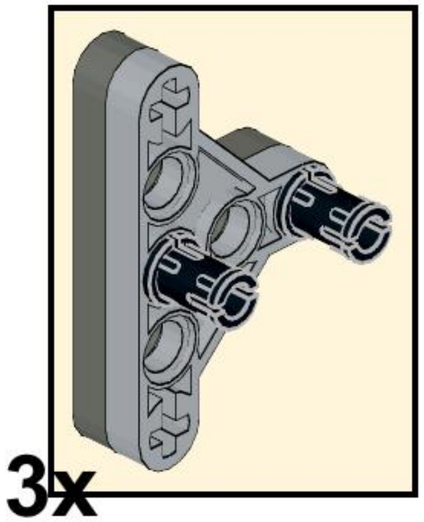


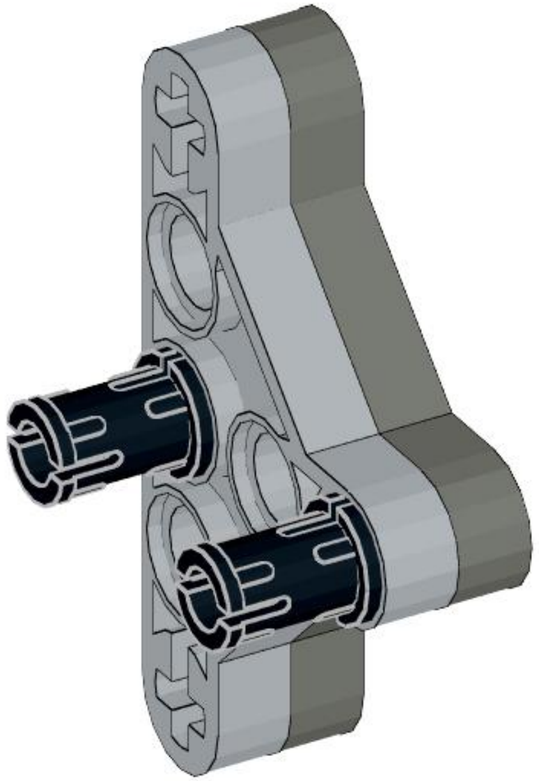

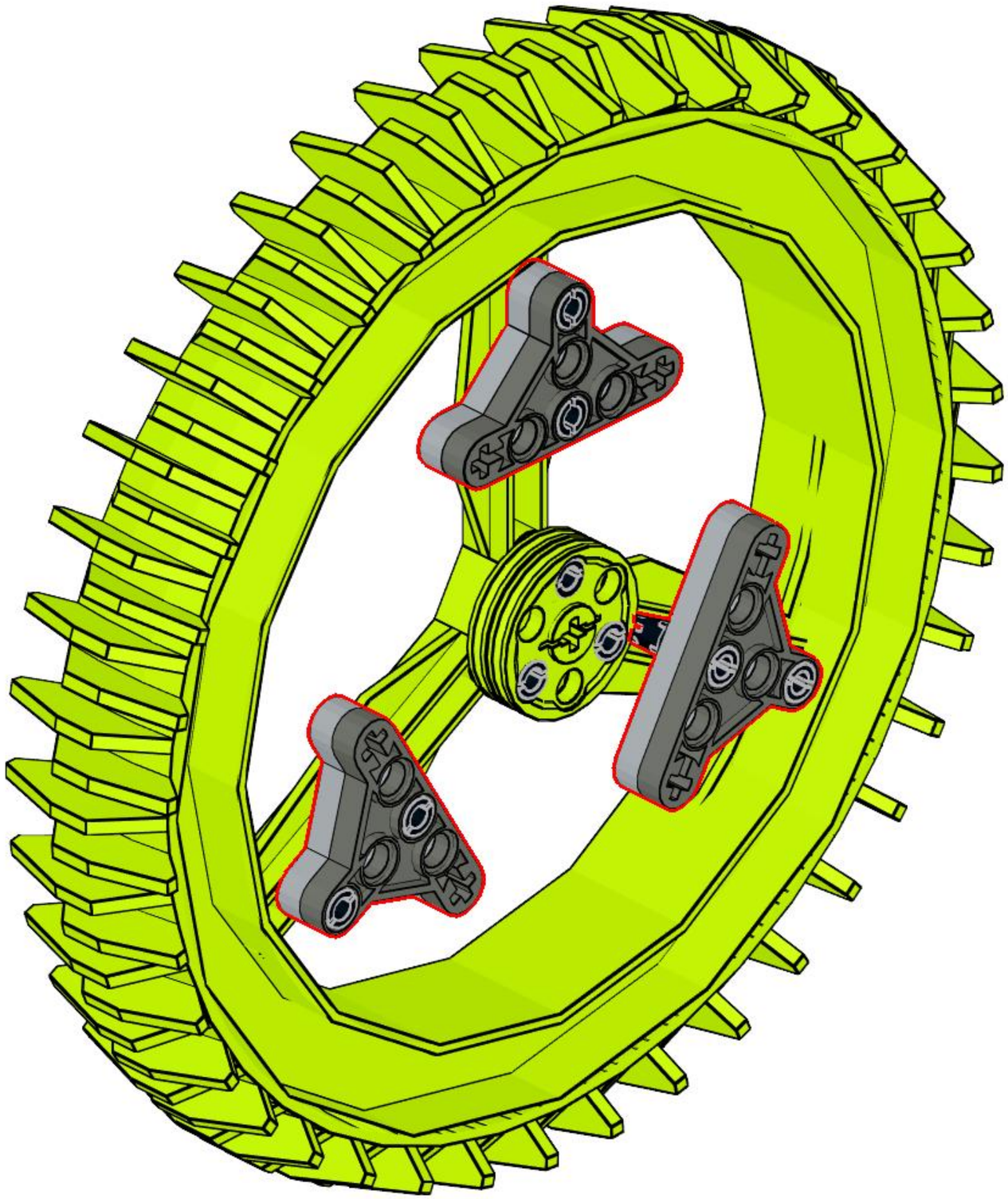

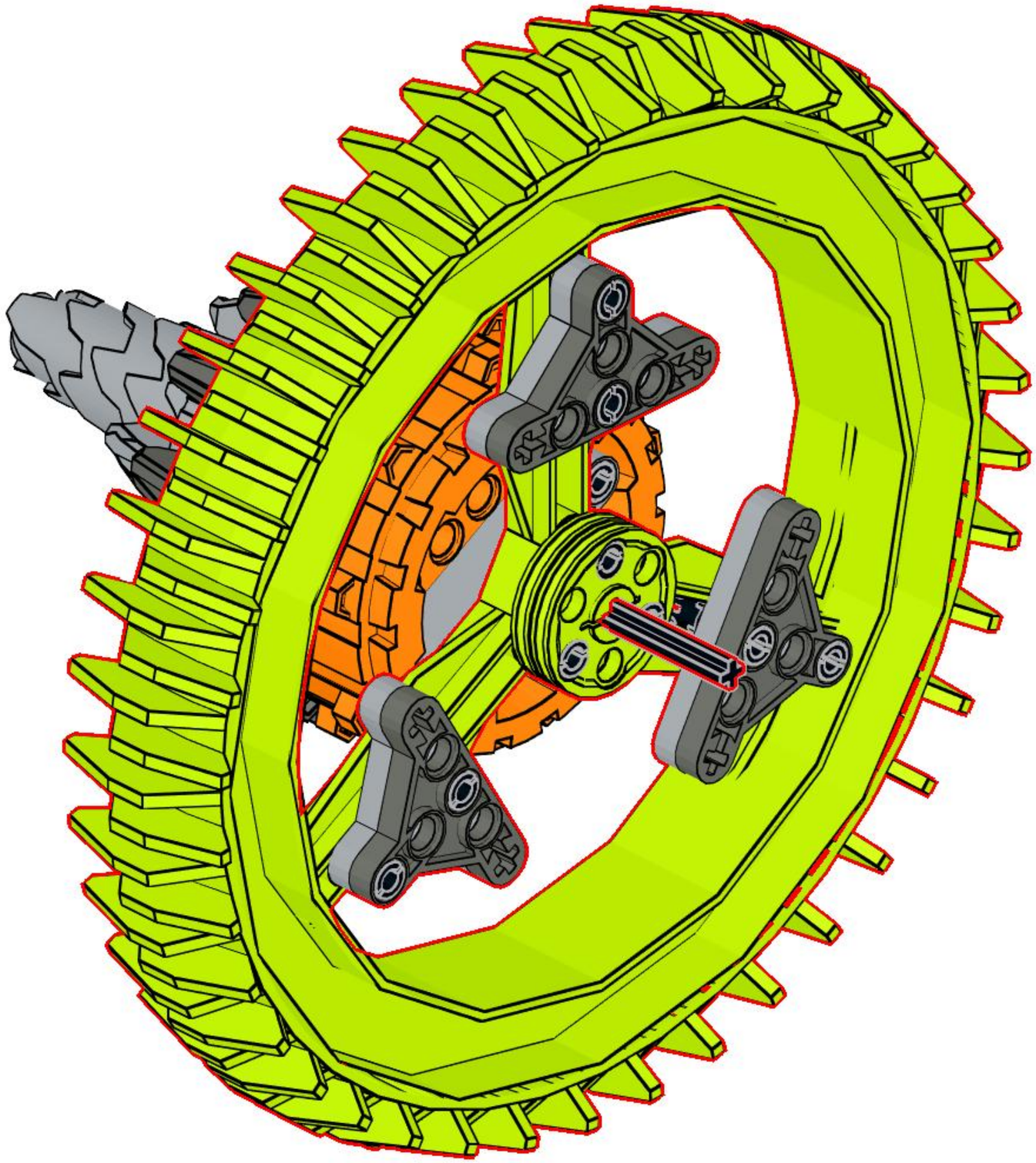

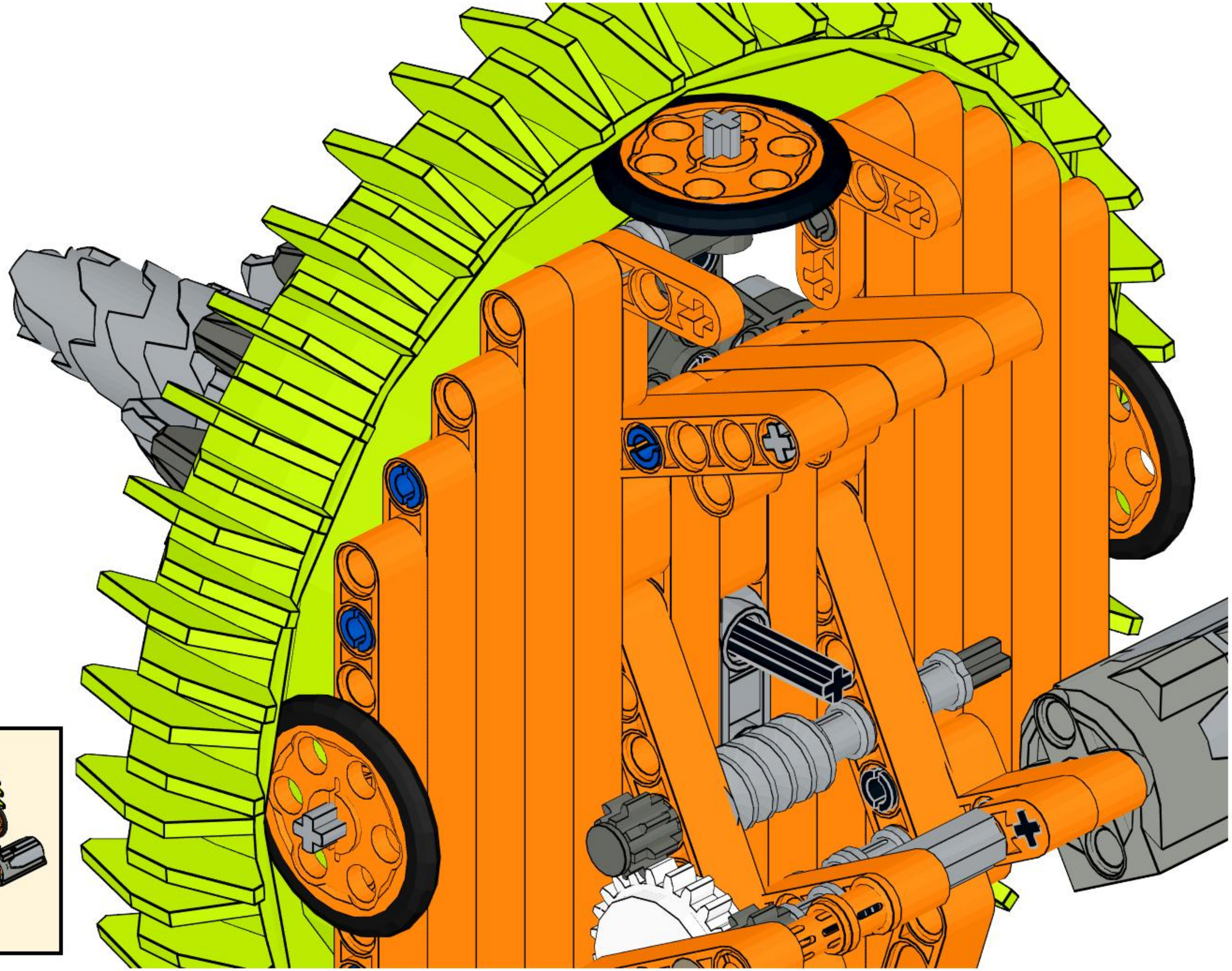

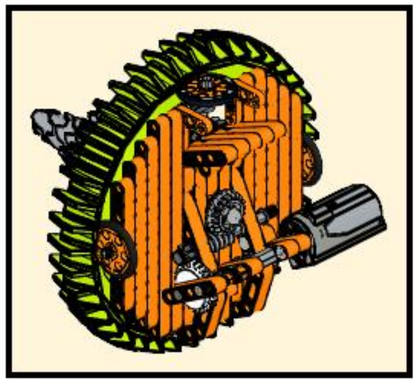

# 75

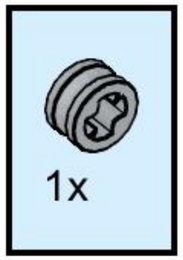


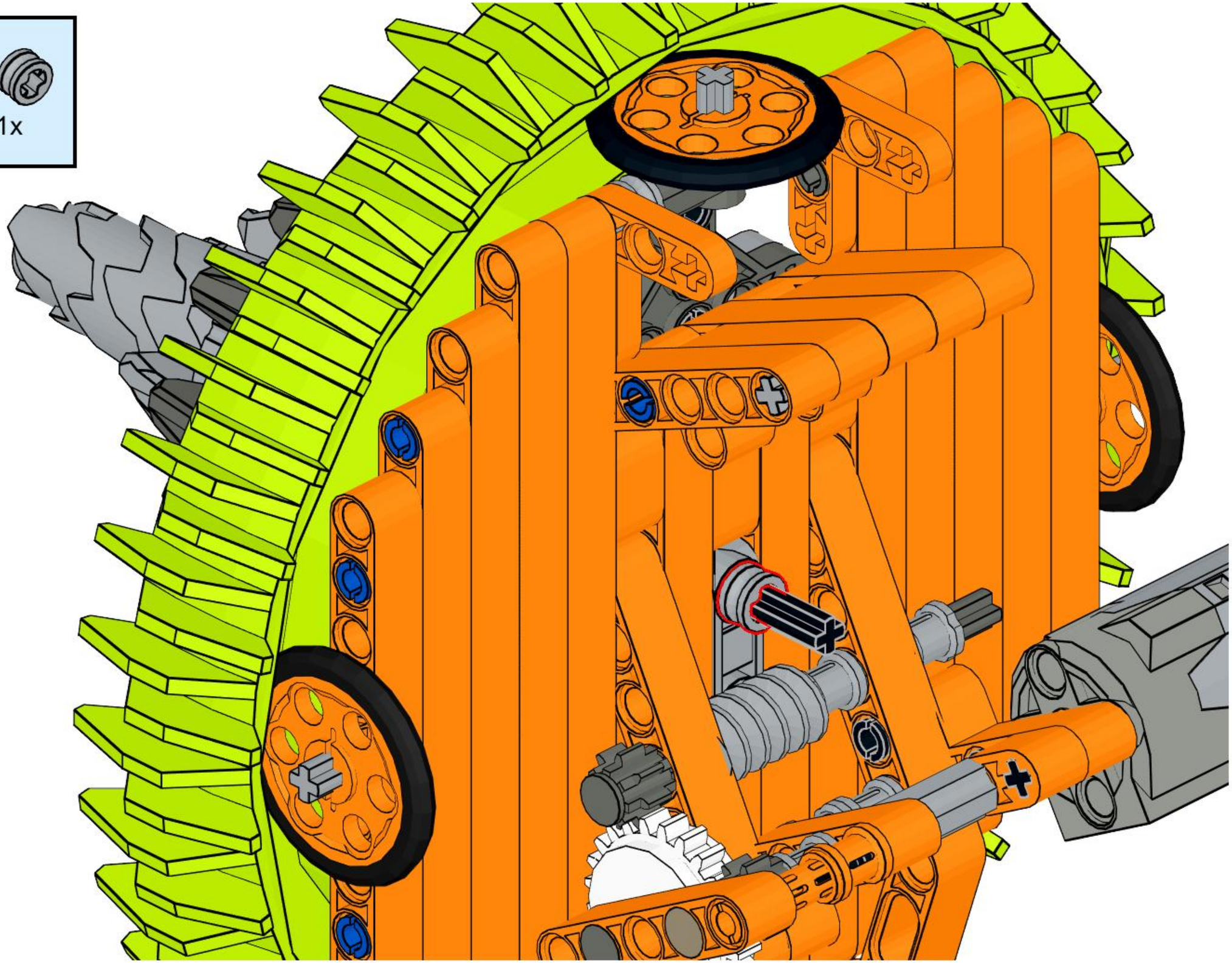

# 76

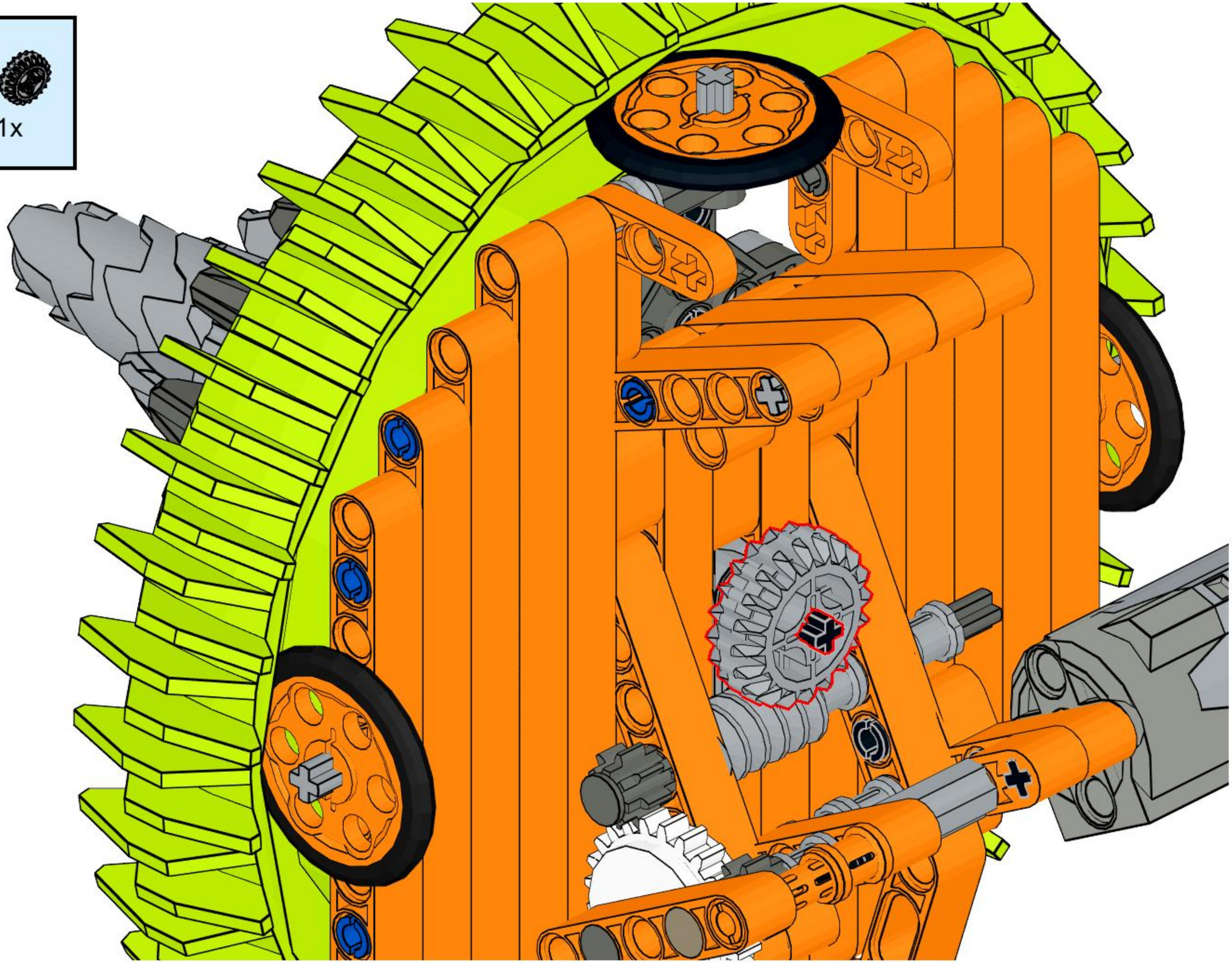

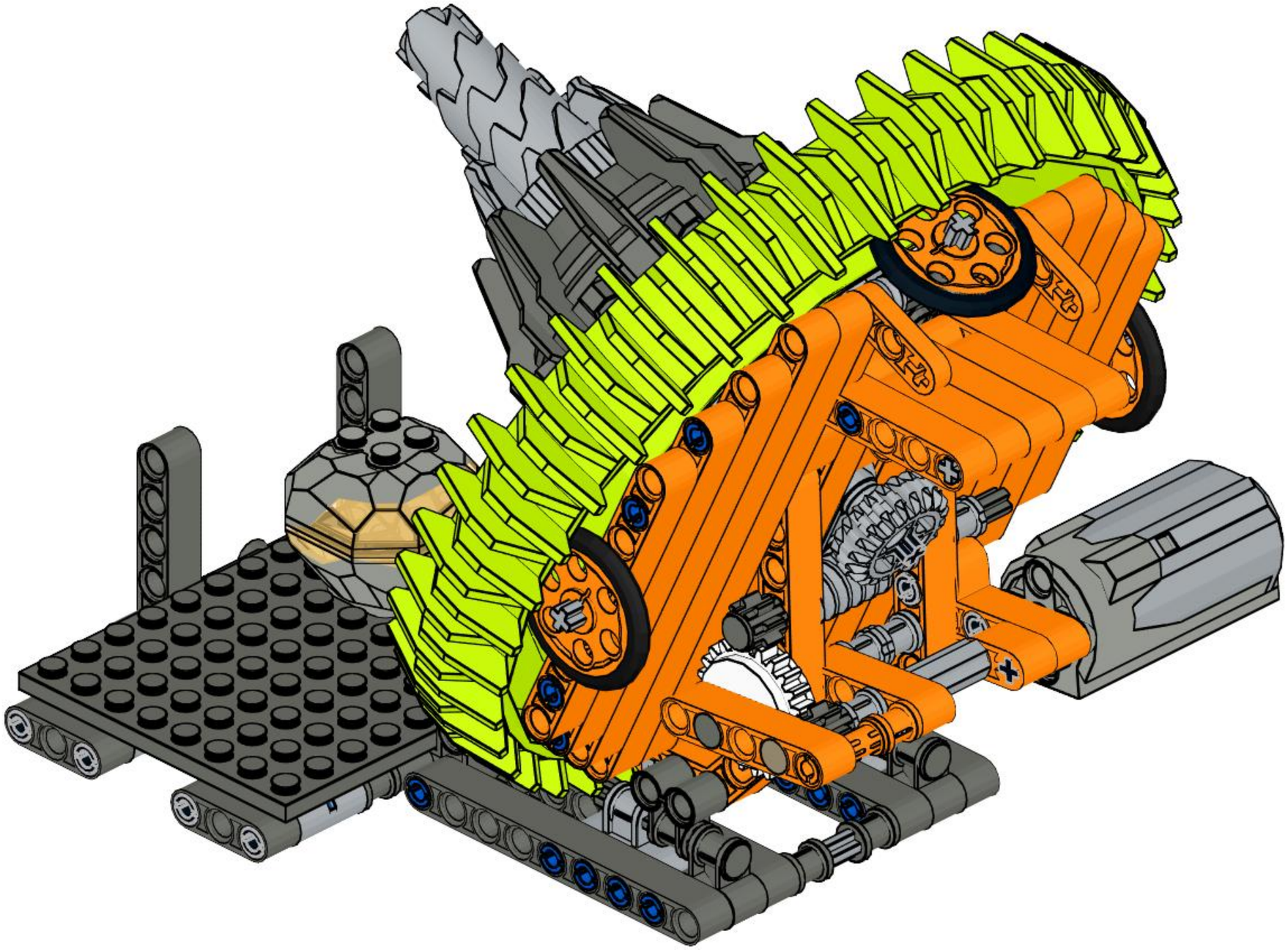

# 78

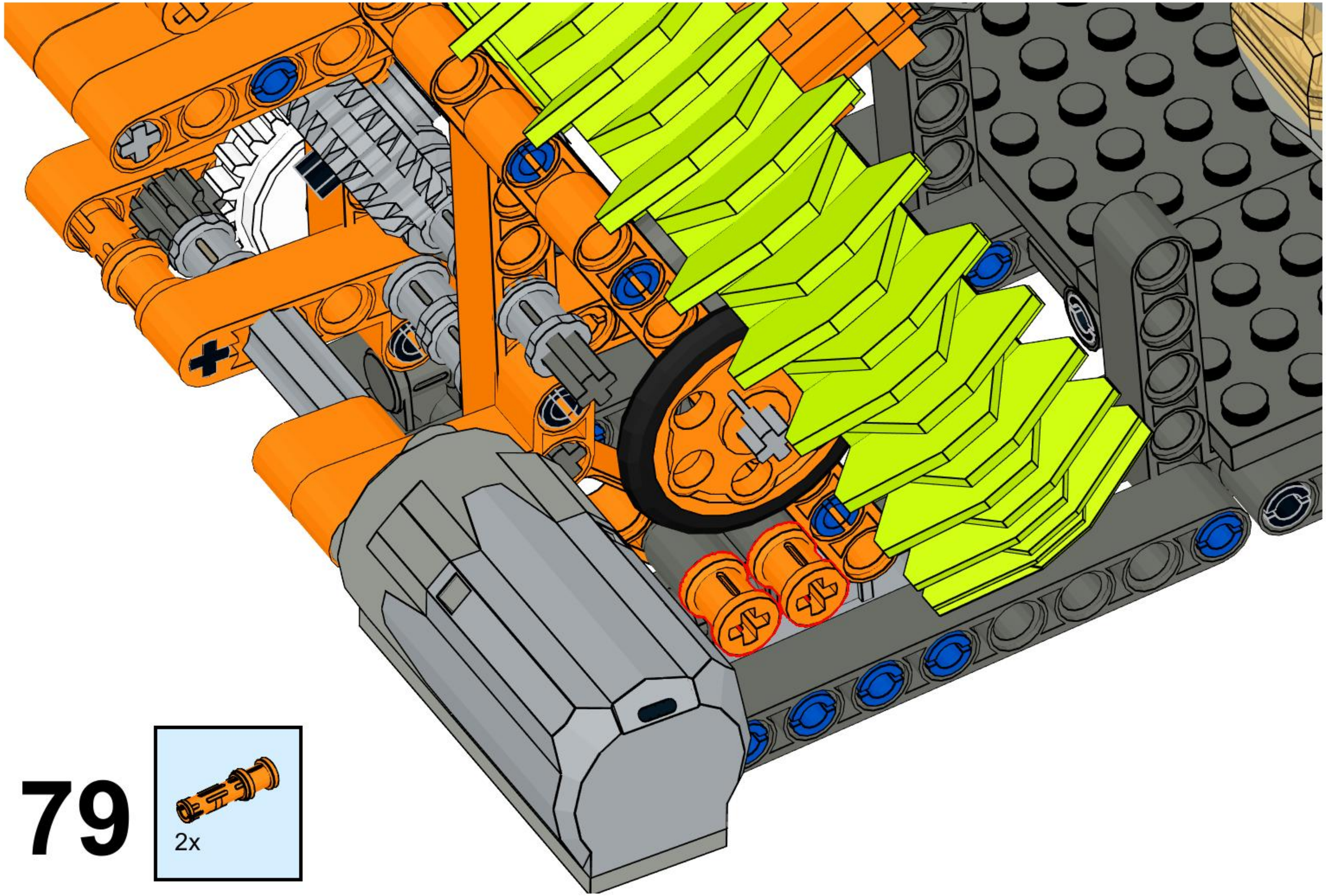

79

# 80

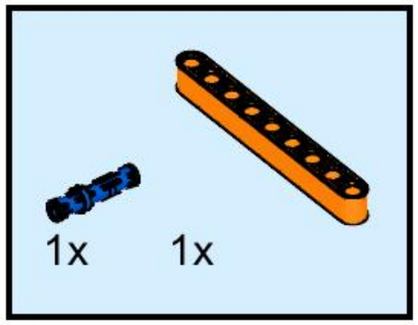

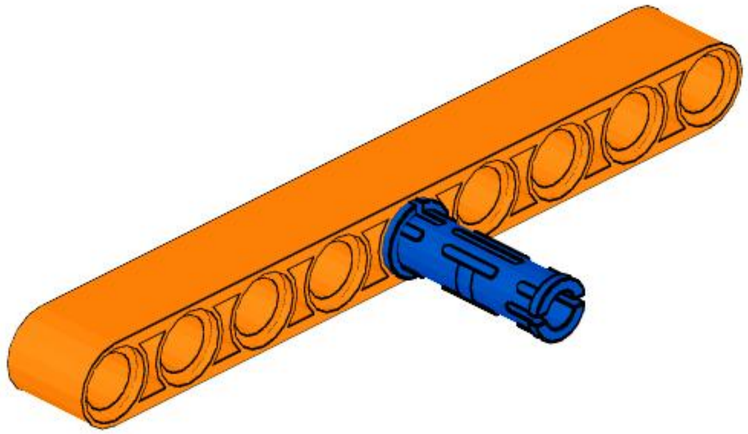

# 81

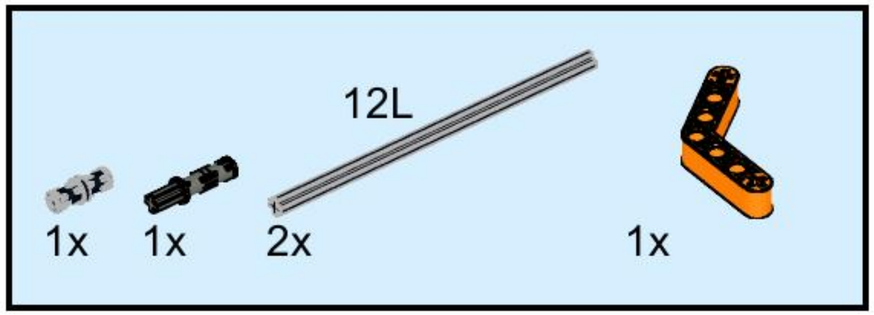


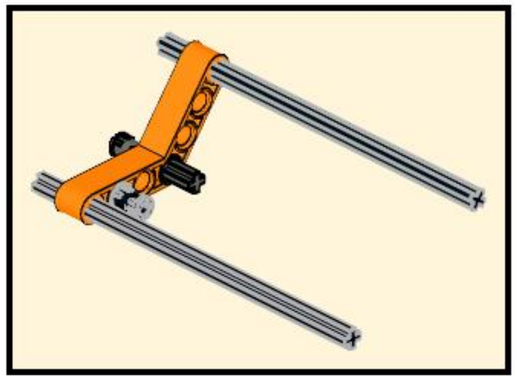

# 82

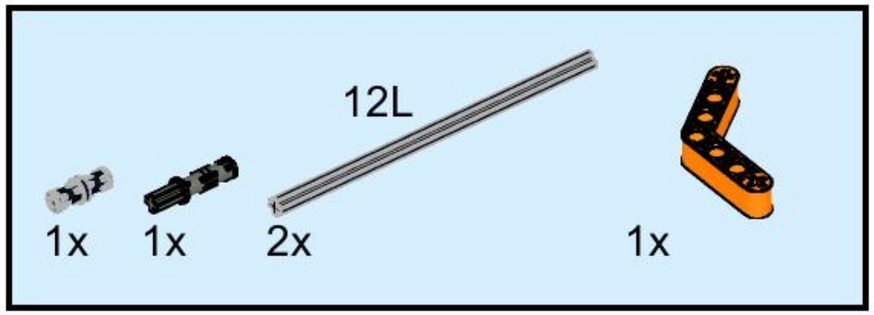


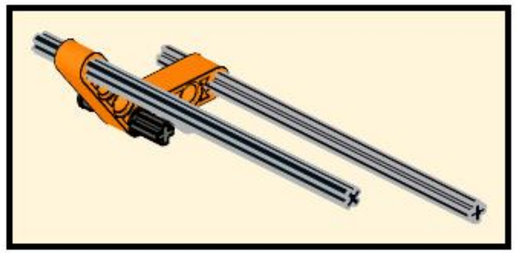

# 83

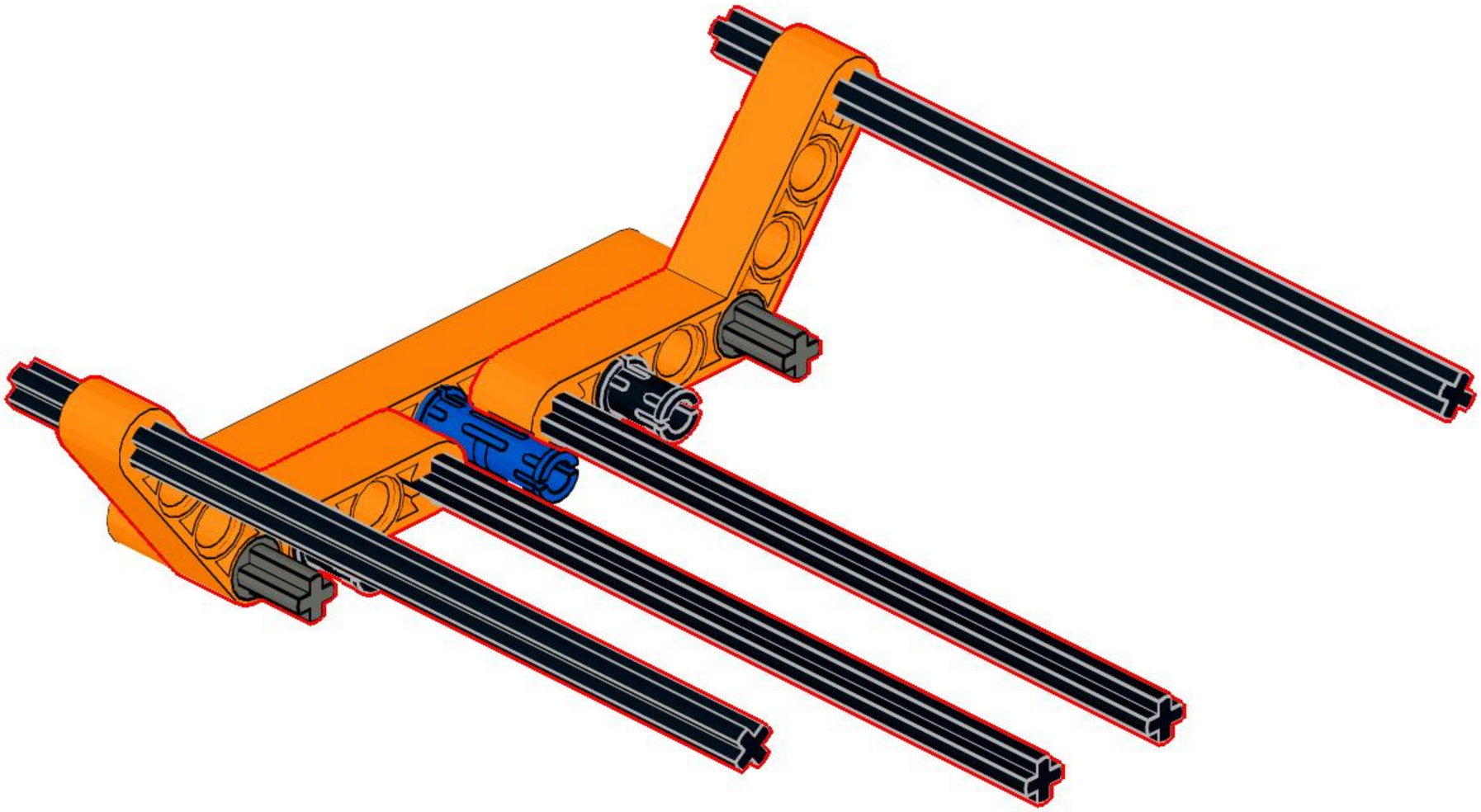

# 84

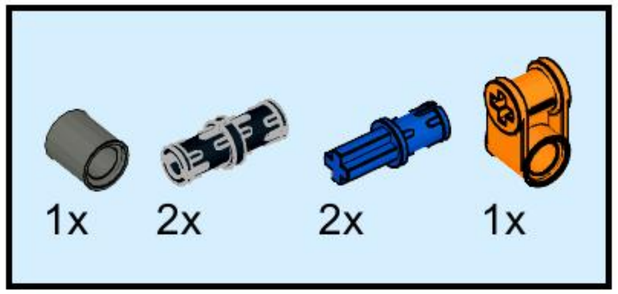

# 85

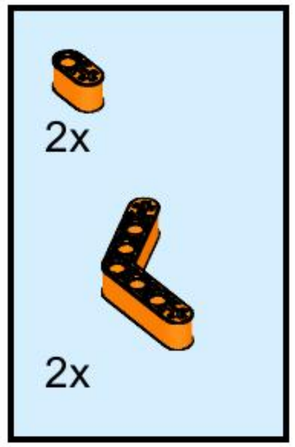

# 86

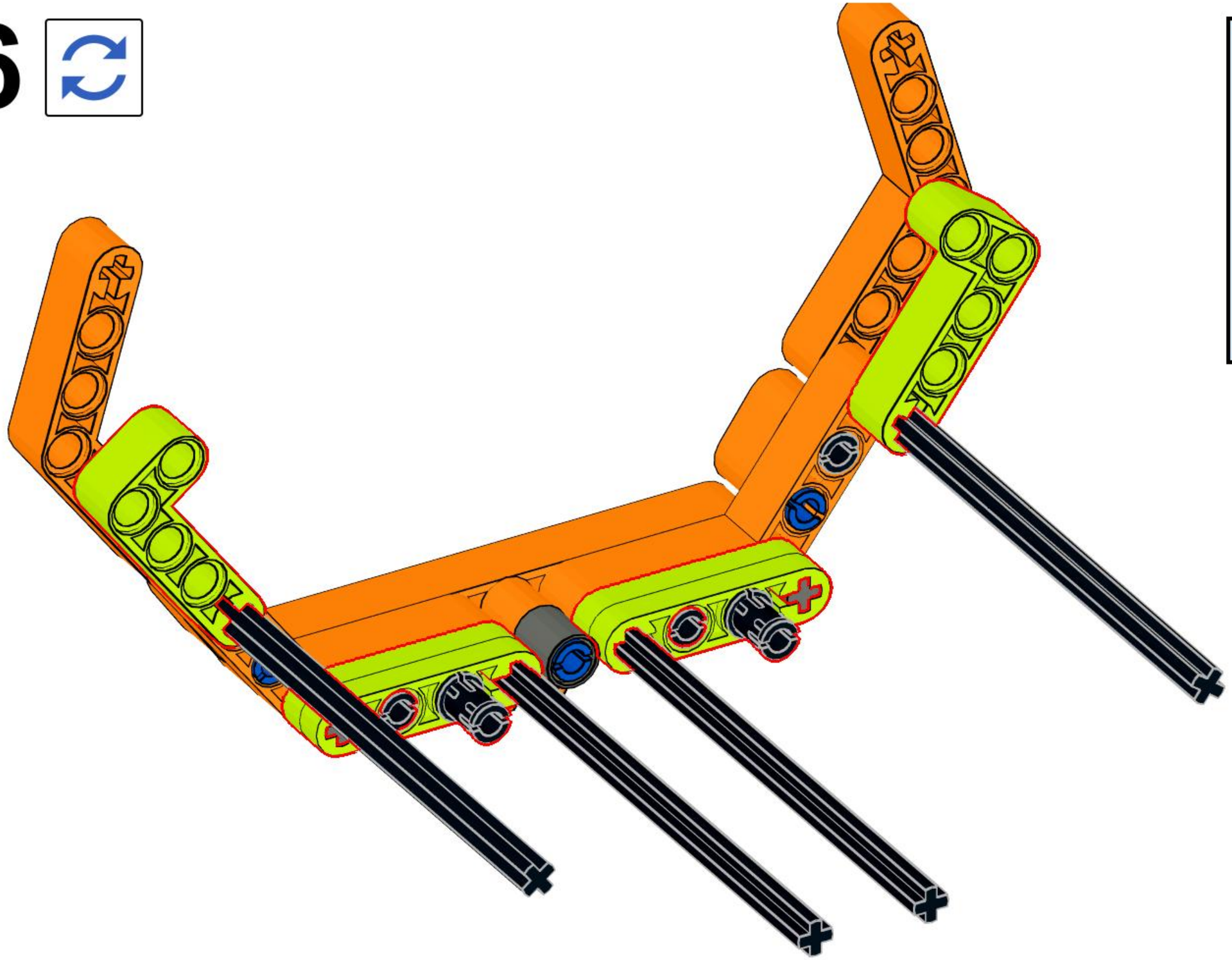

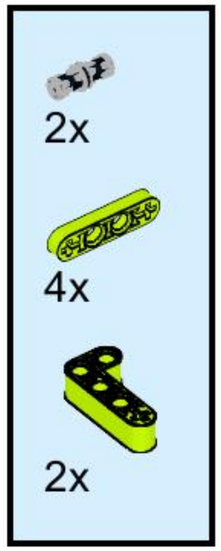

# 87

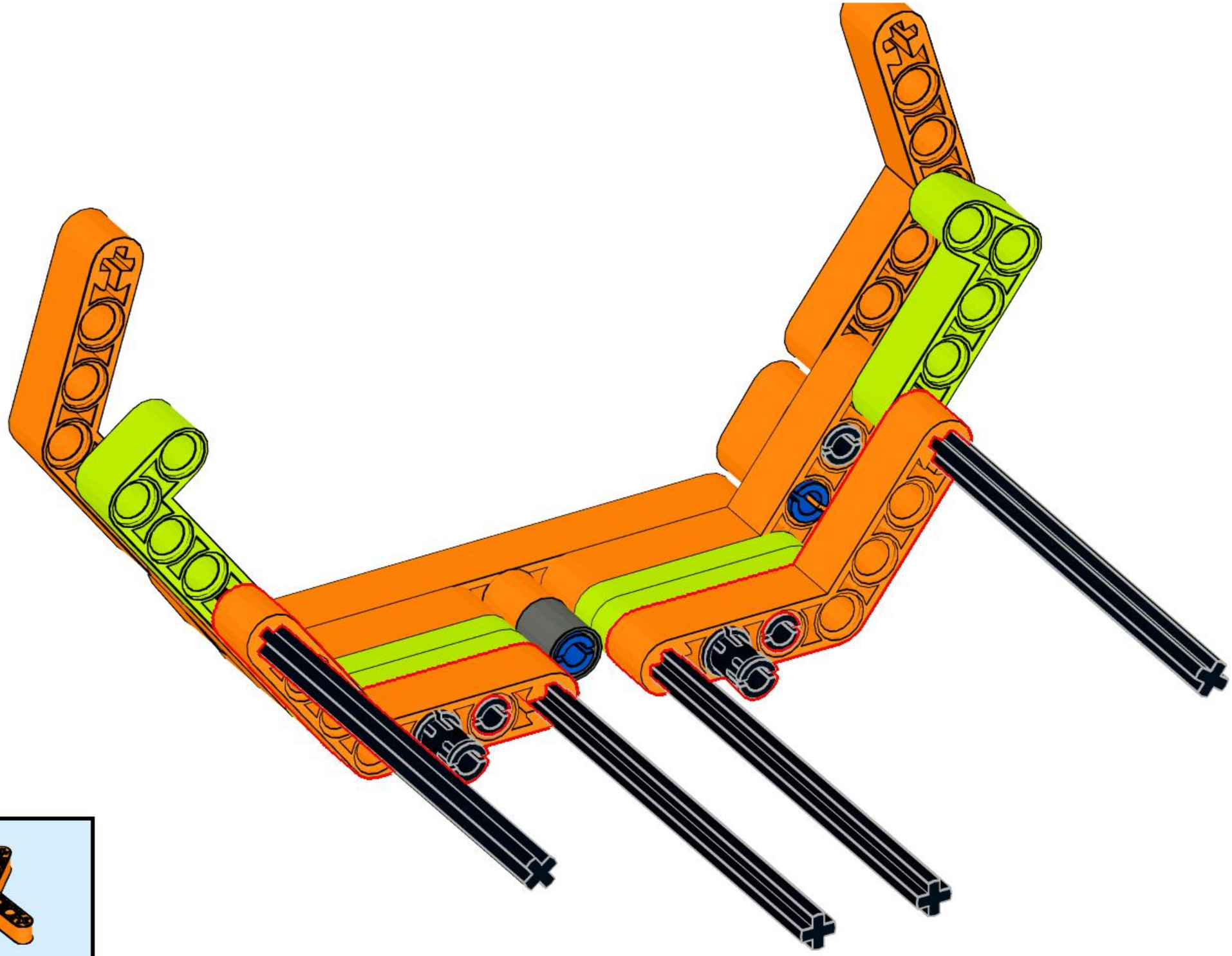

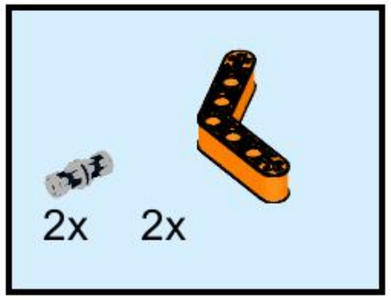

1x
2x
1x
2x

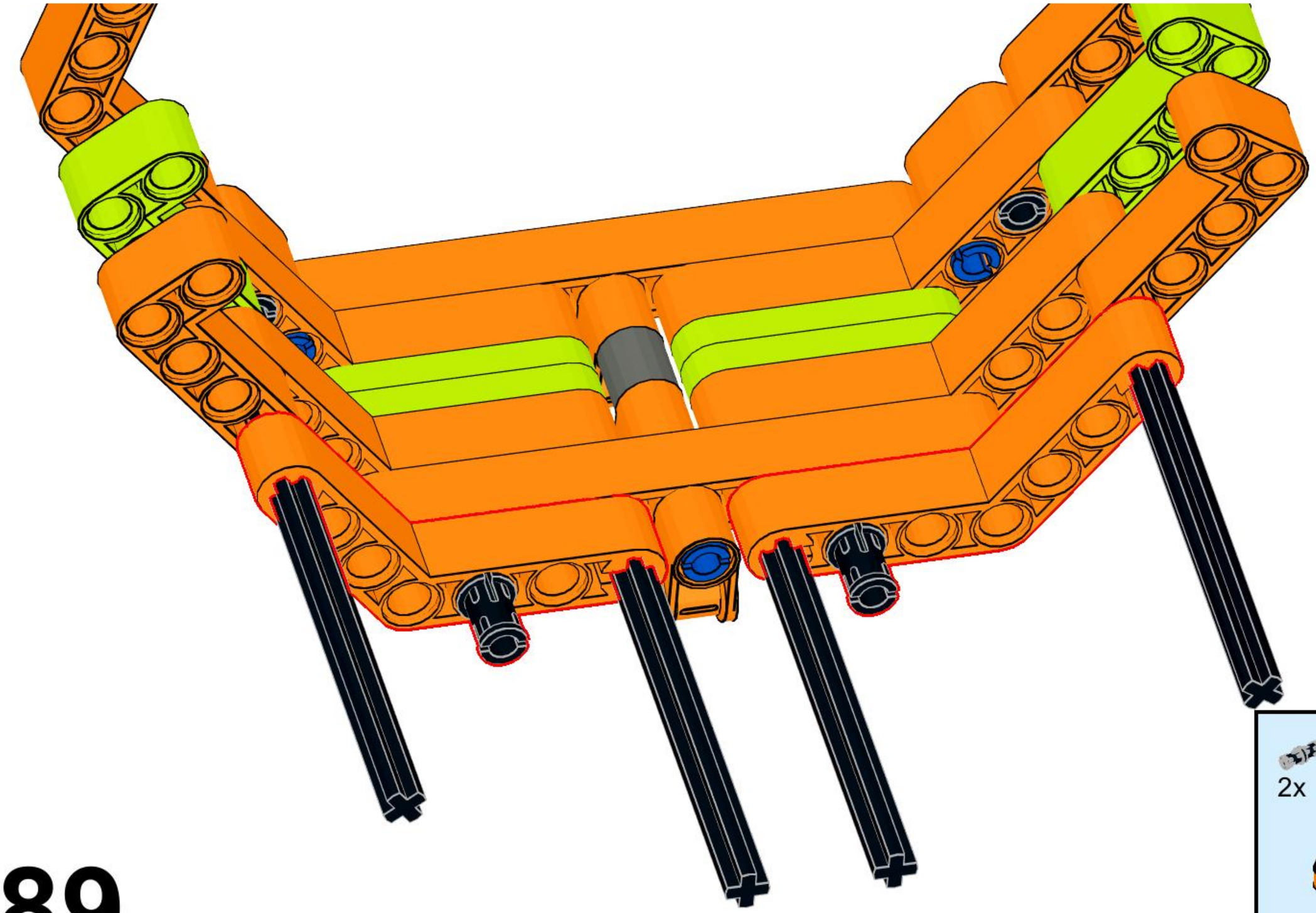

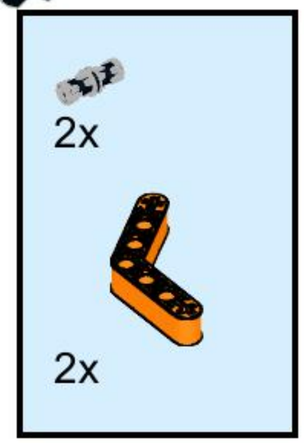
2x
2x

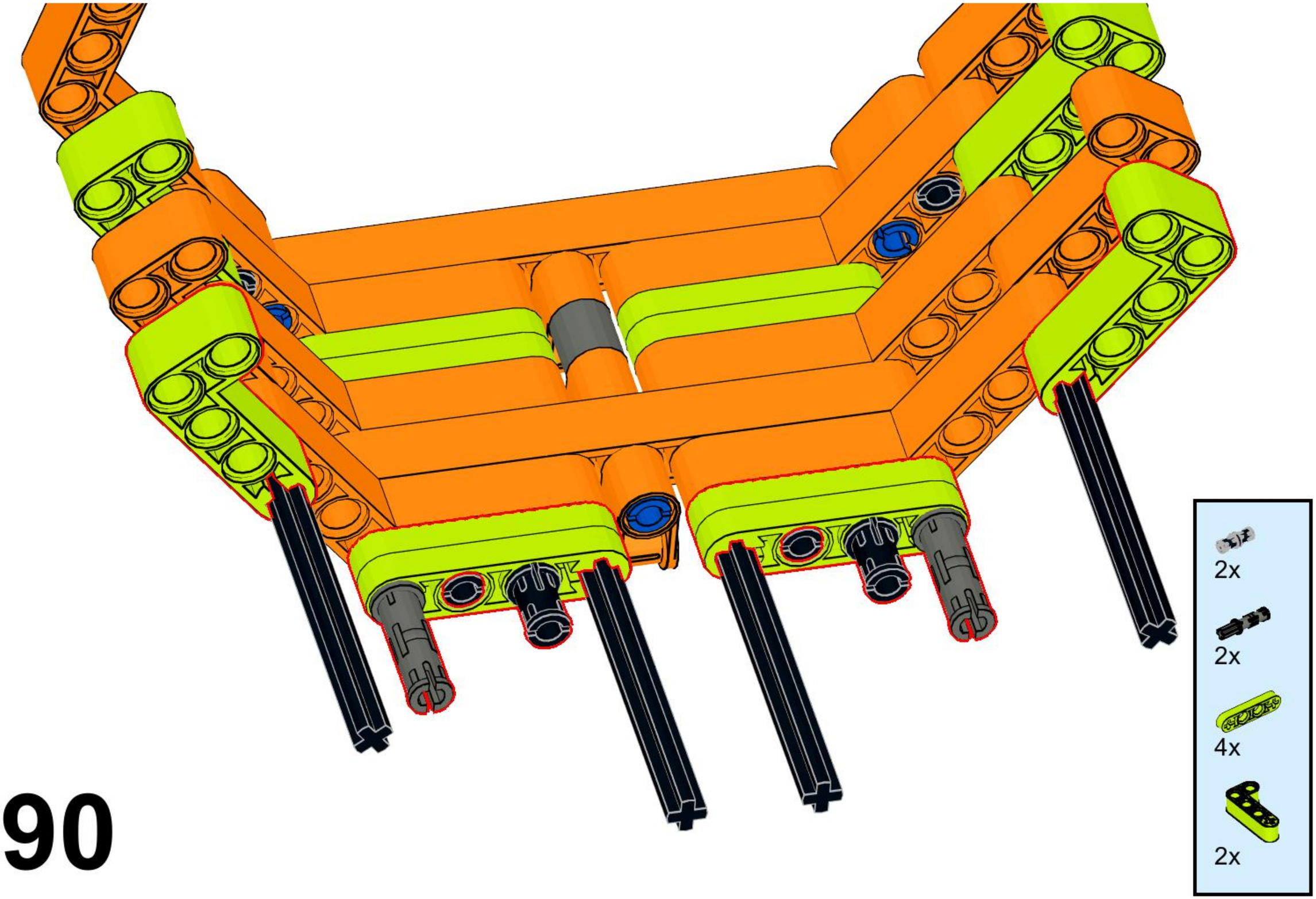
2x
2x
4x
2x

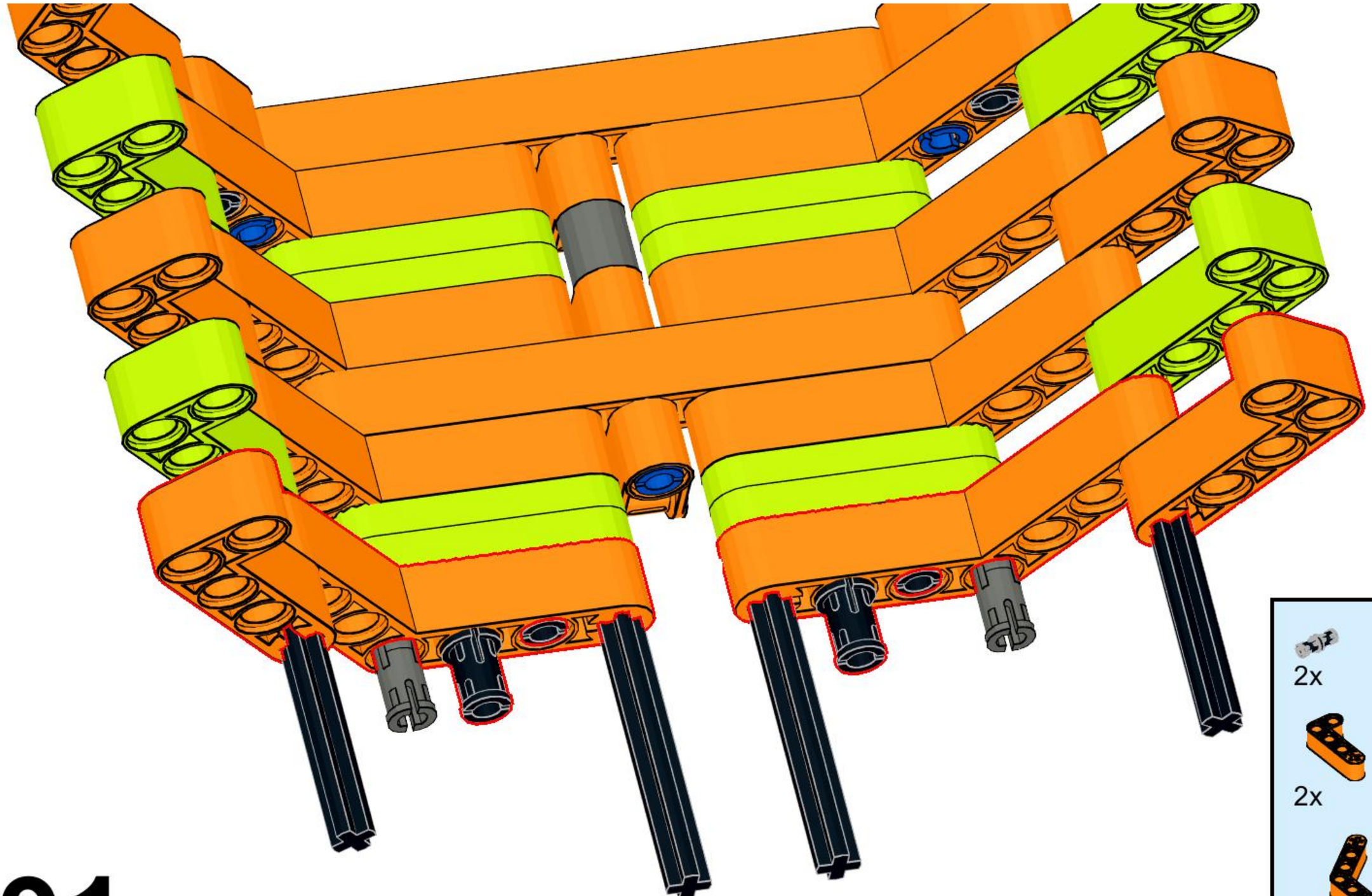

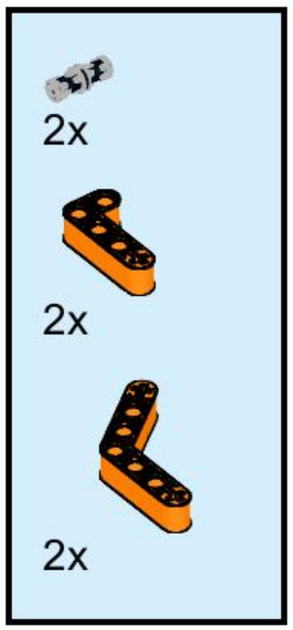


91

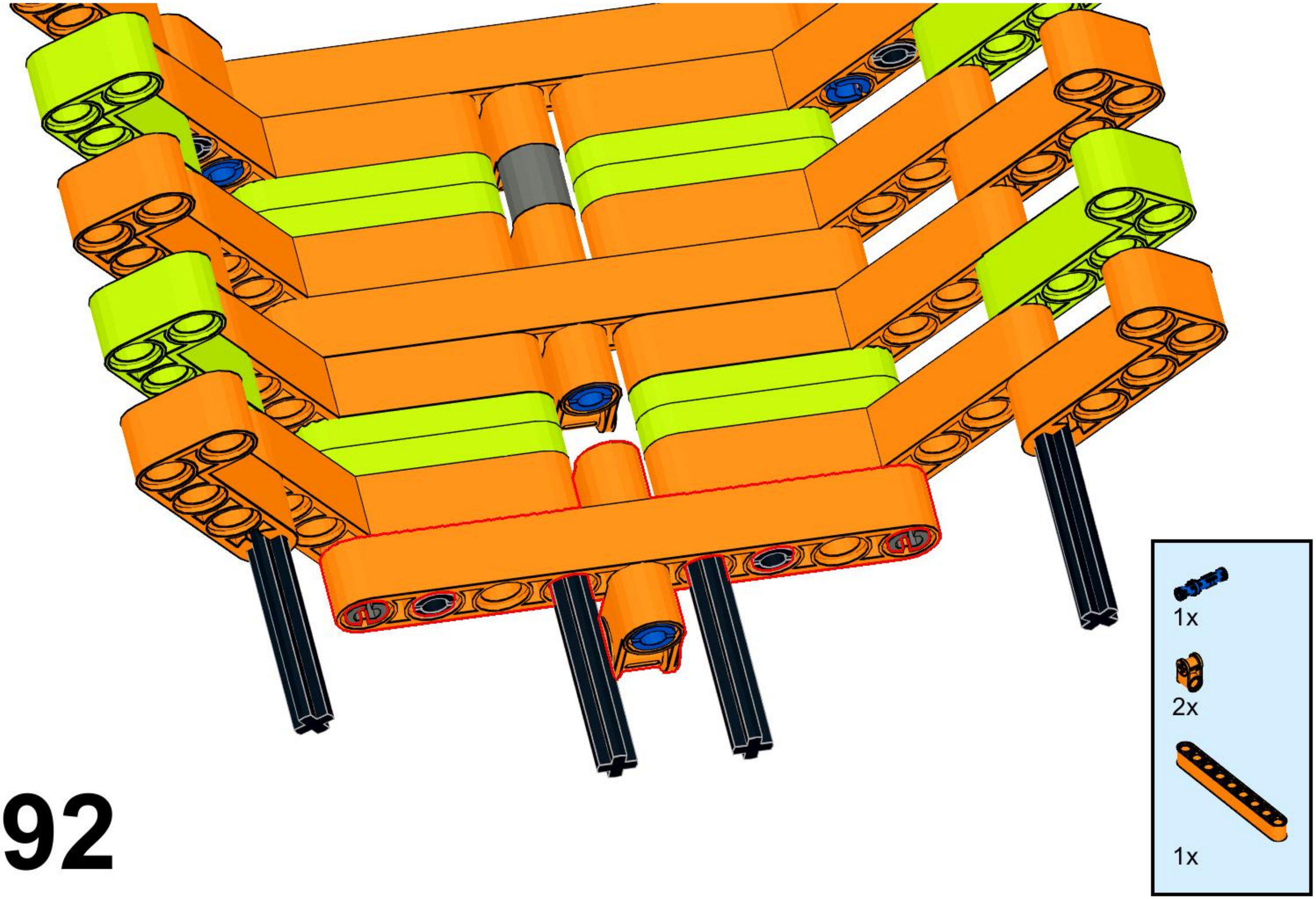
1x
2x
1x

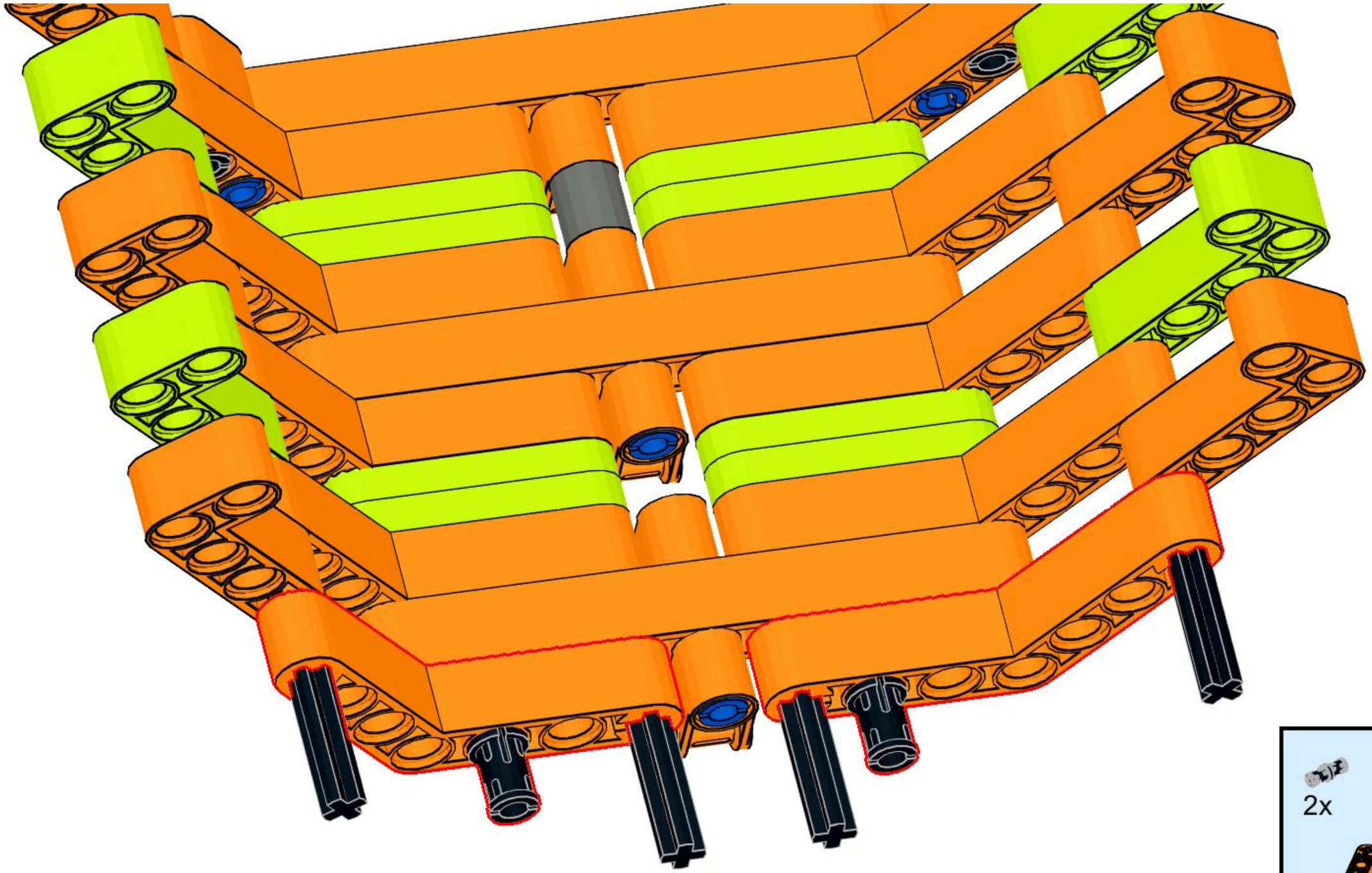

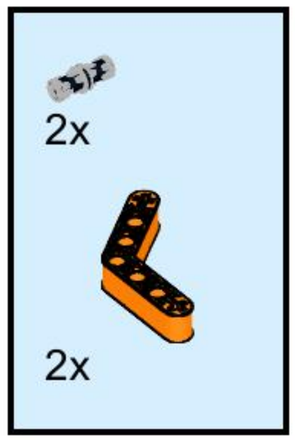
2x
2x

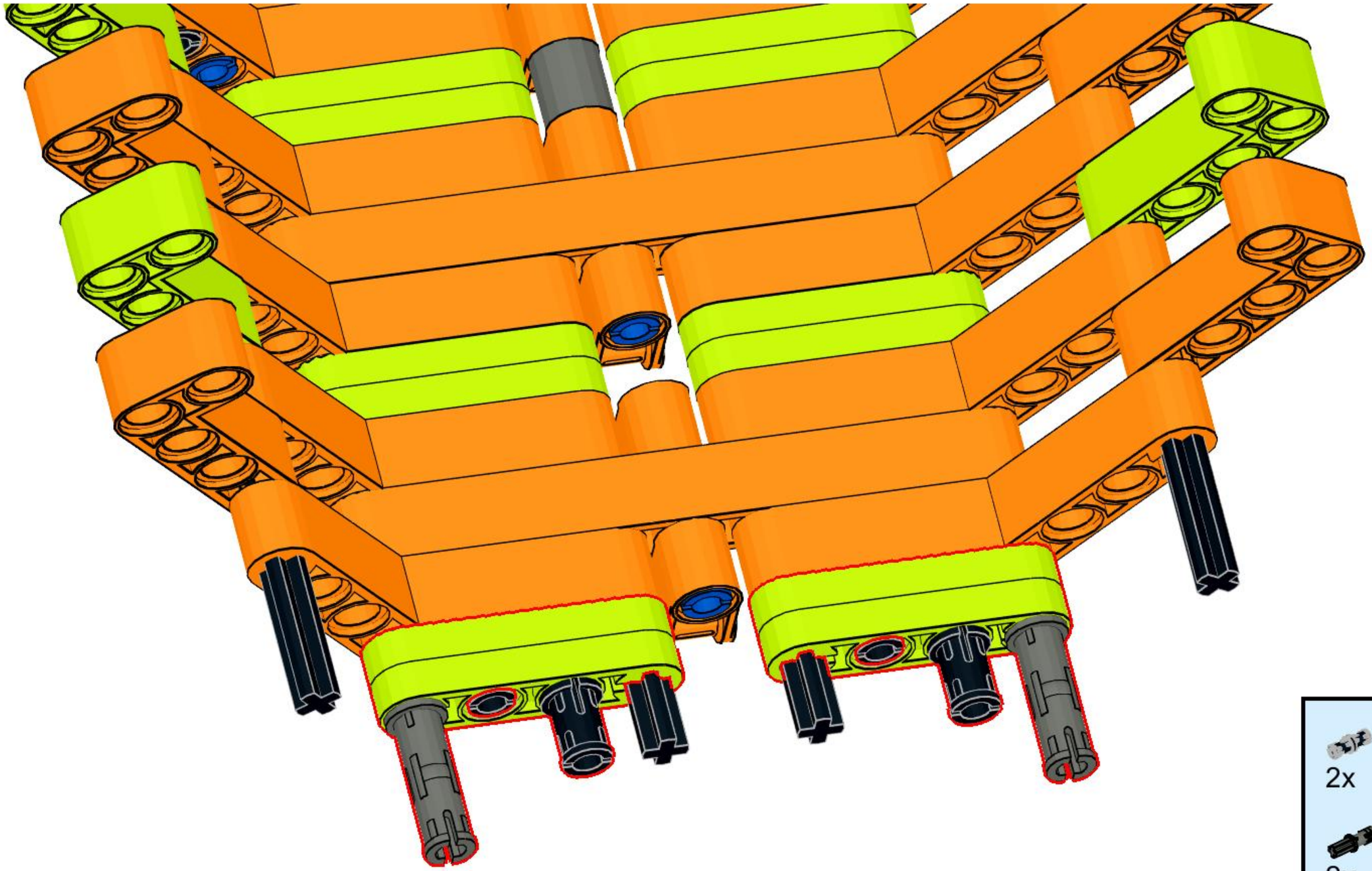

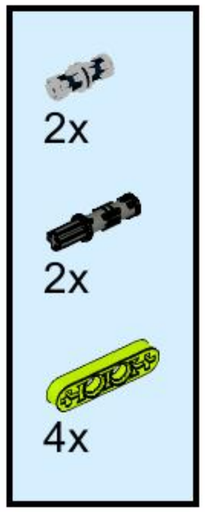
2x
2x
4x

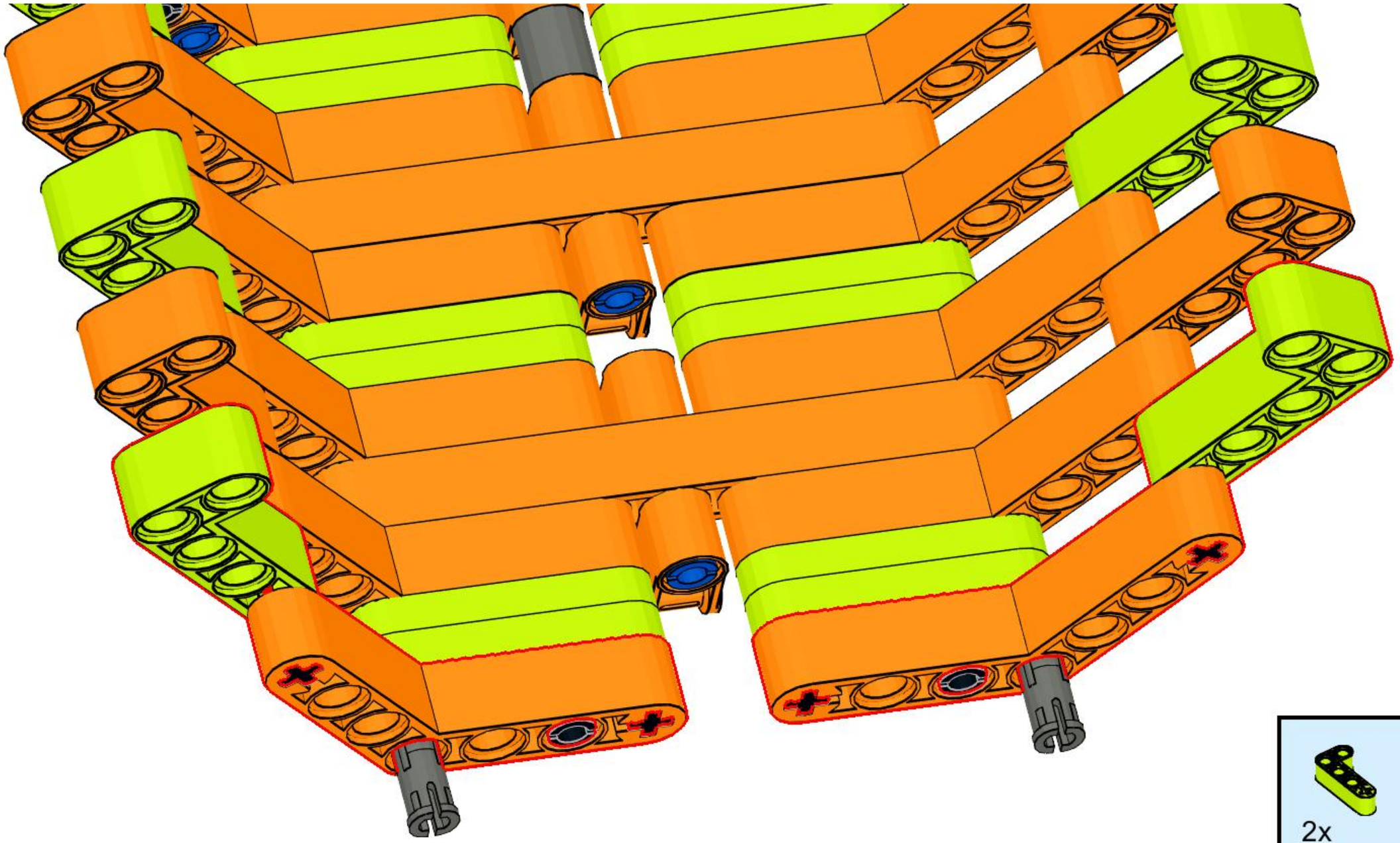

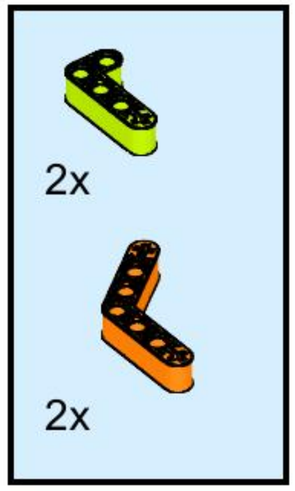


# 95

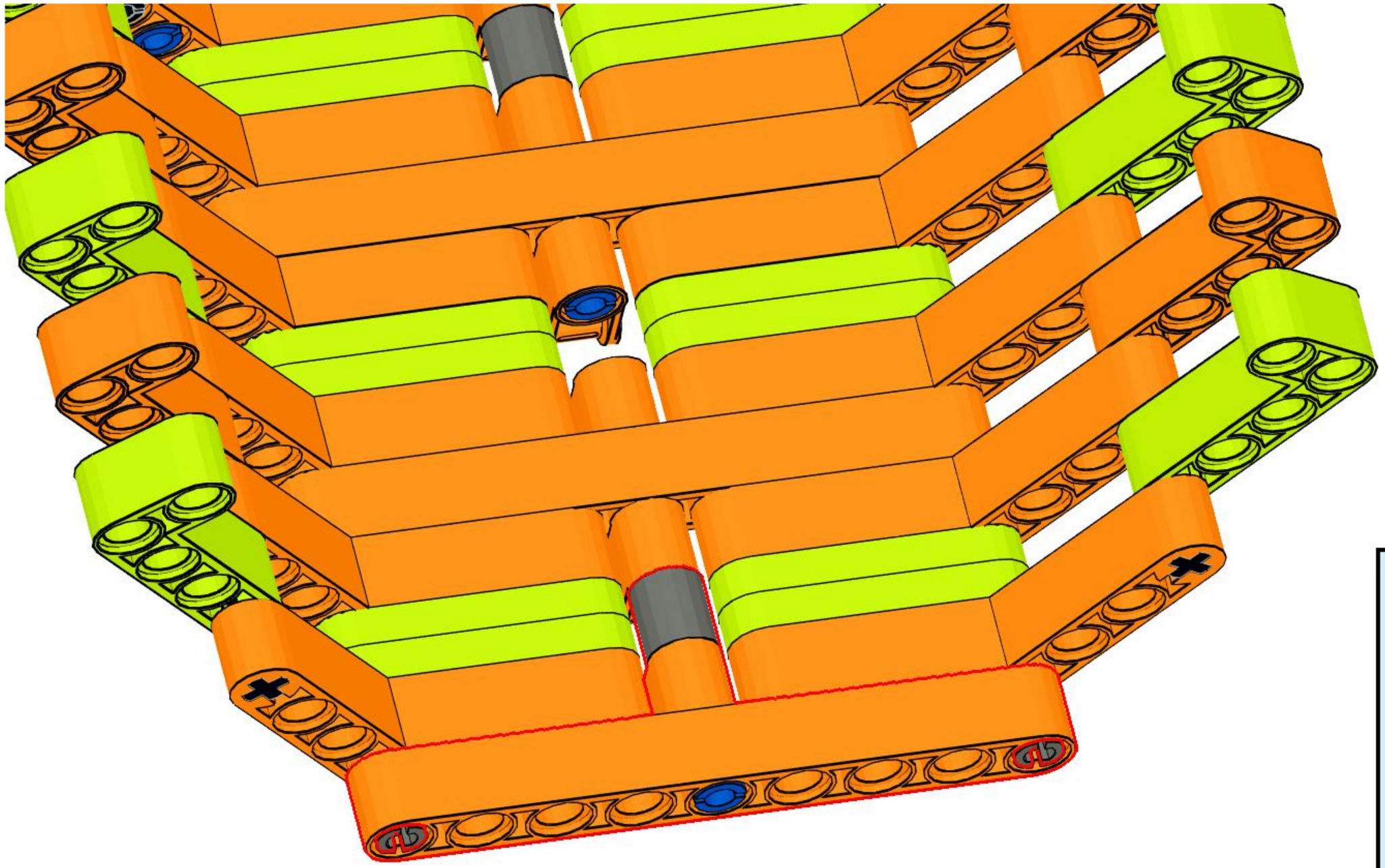

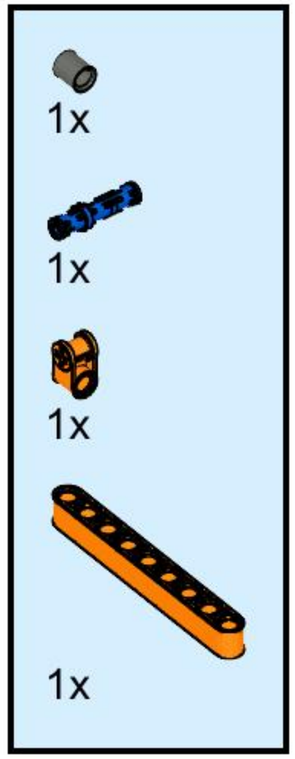
1x
1x
1x
1x

# 97

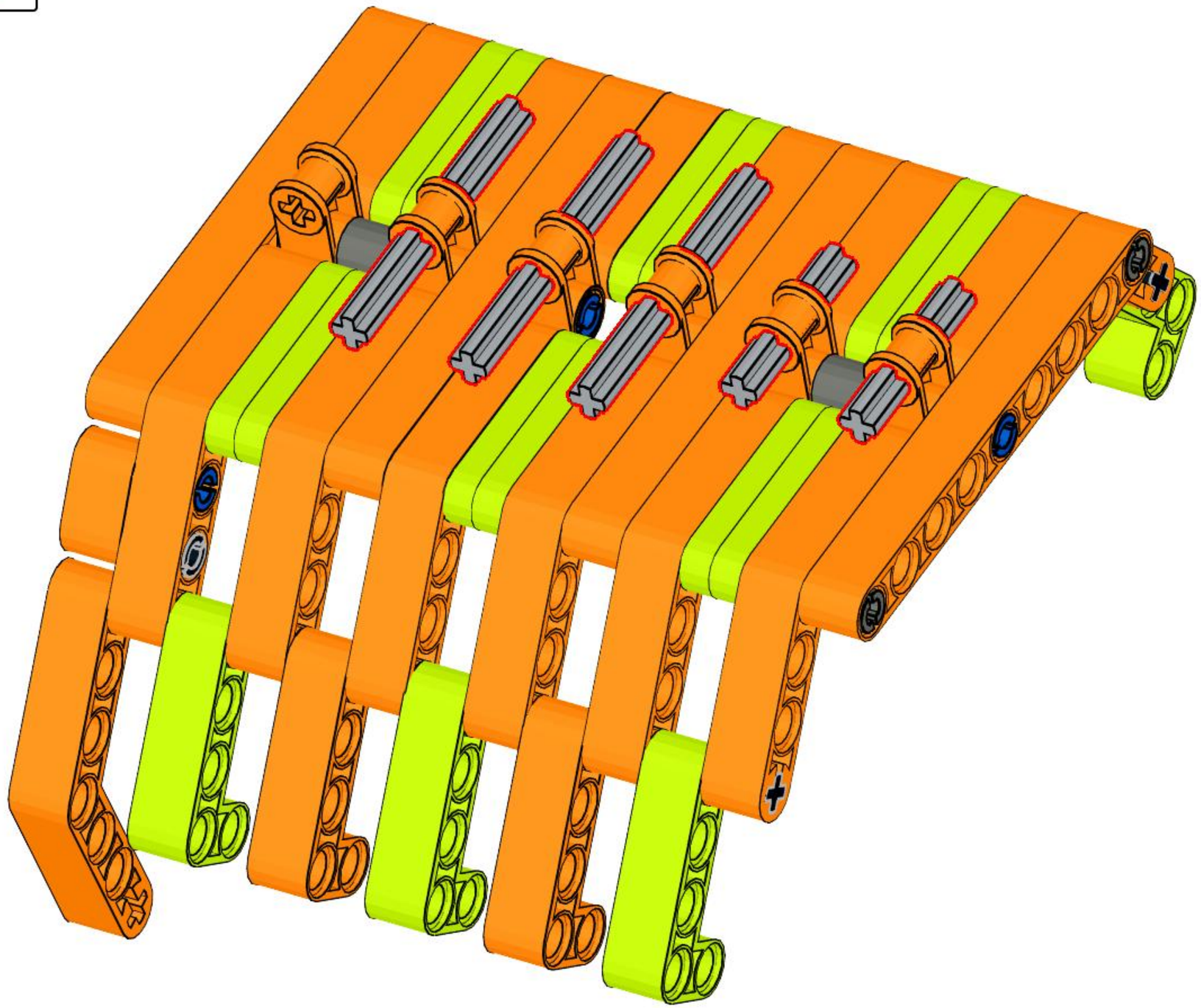

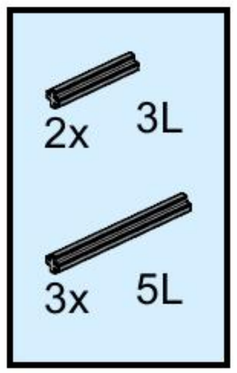

# 98

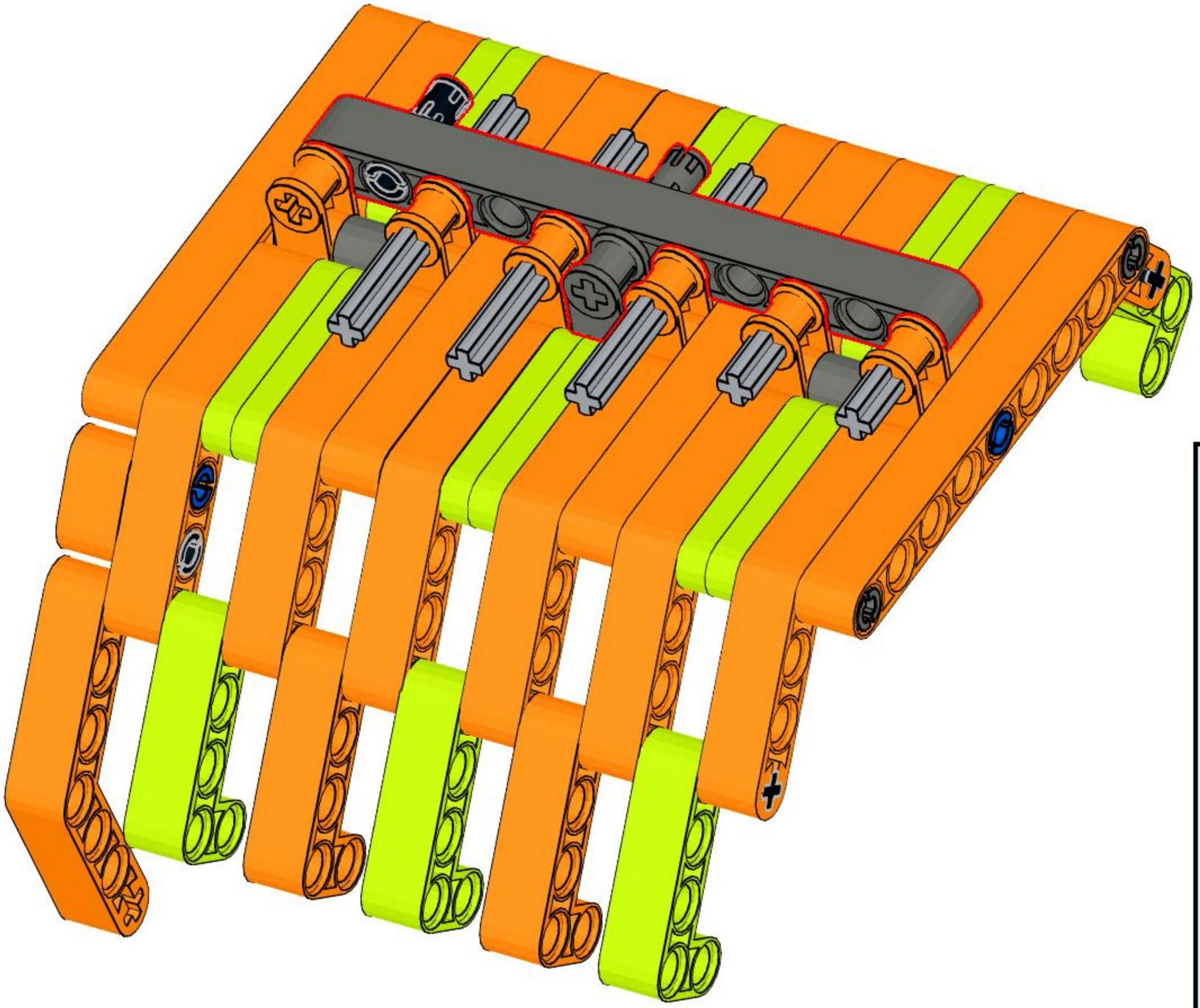

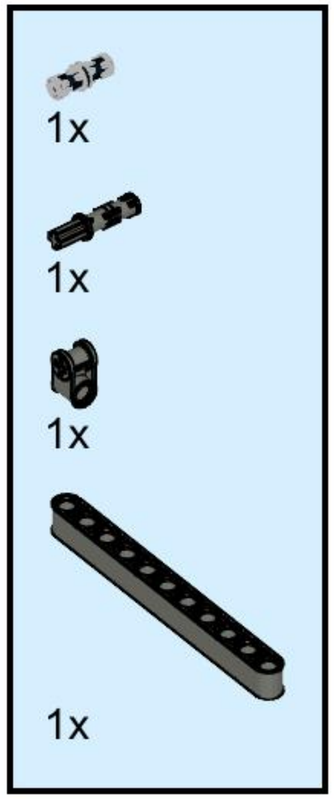

# 99

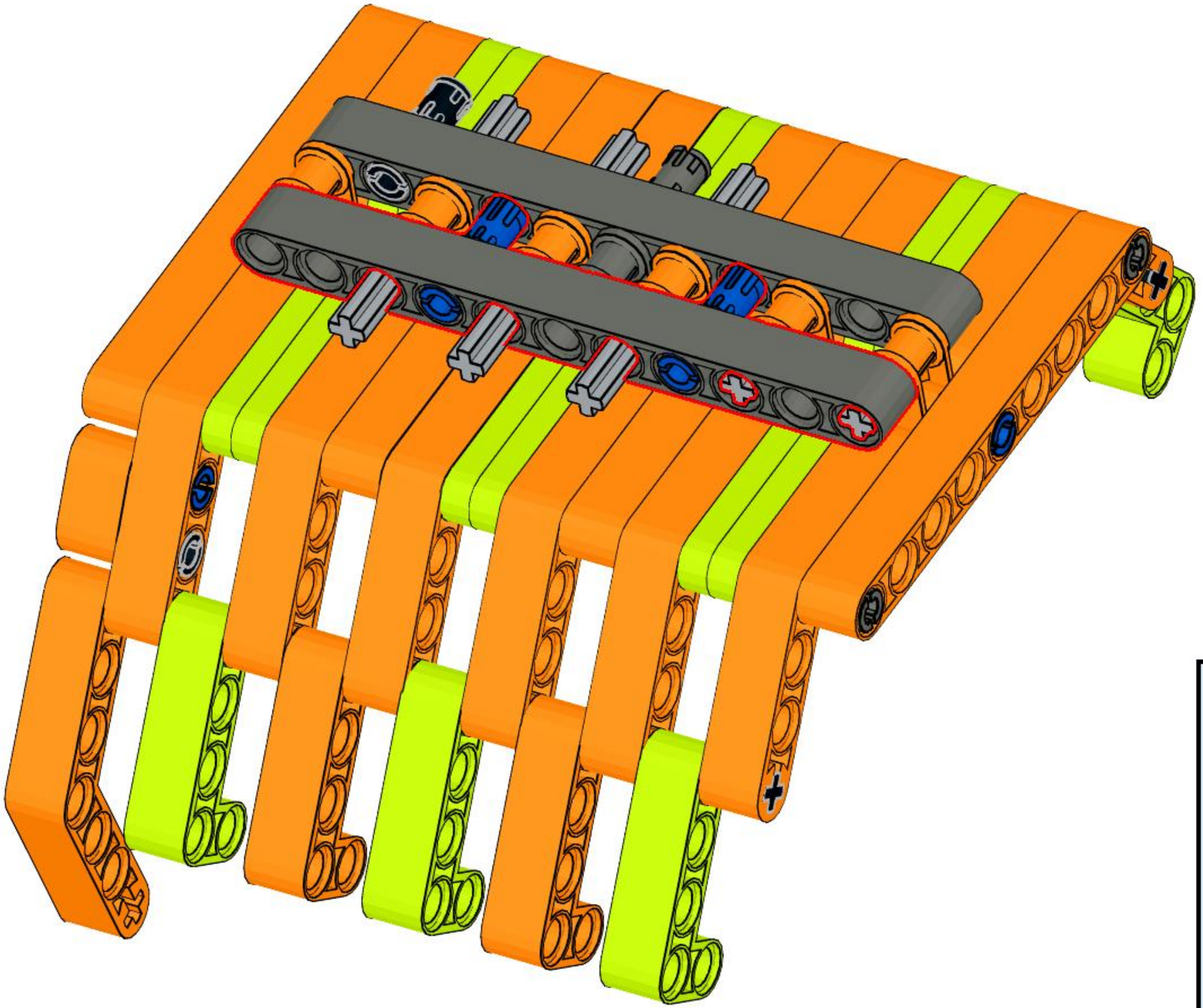

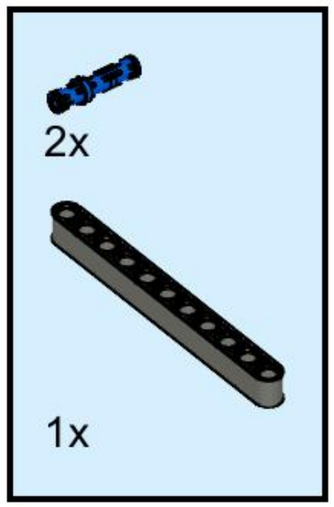

# 100

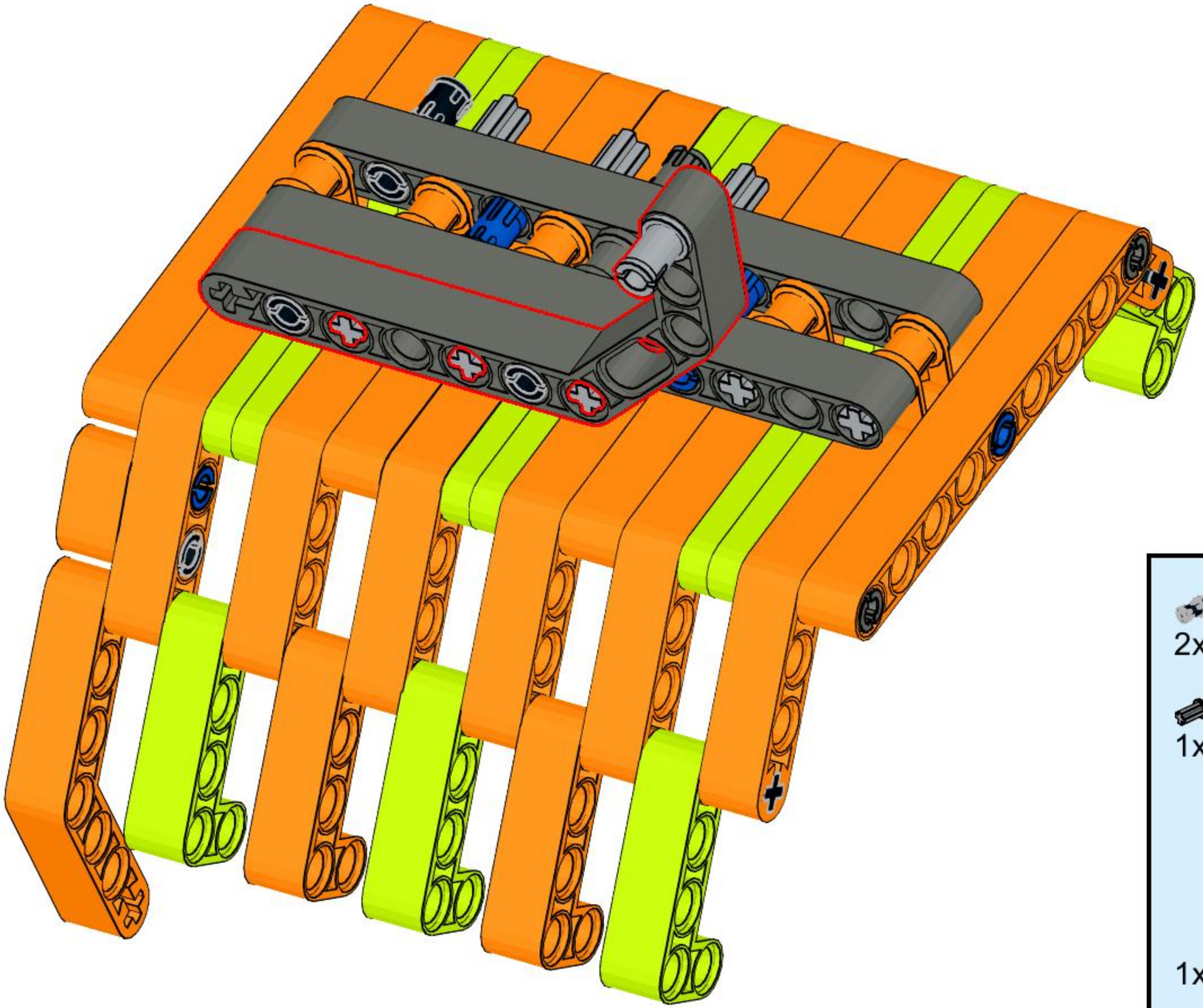

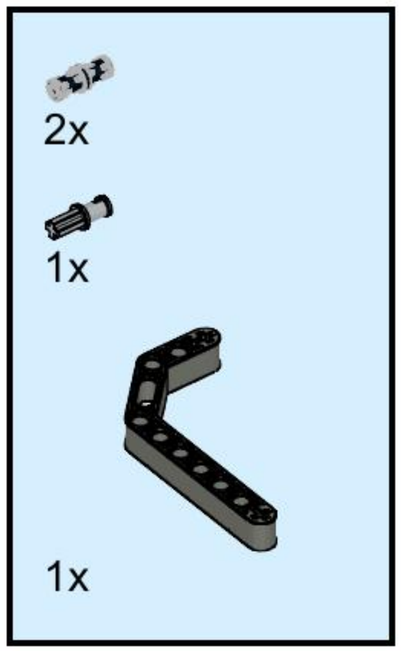

# 101

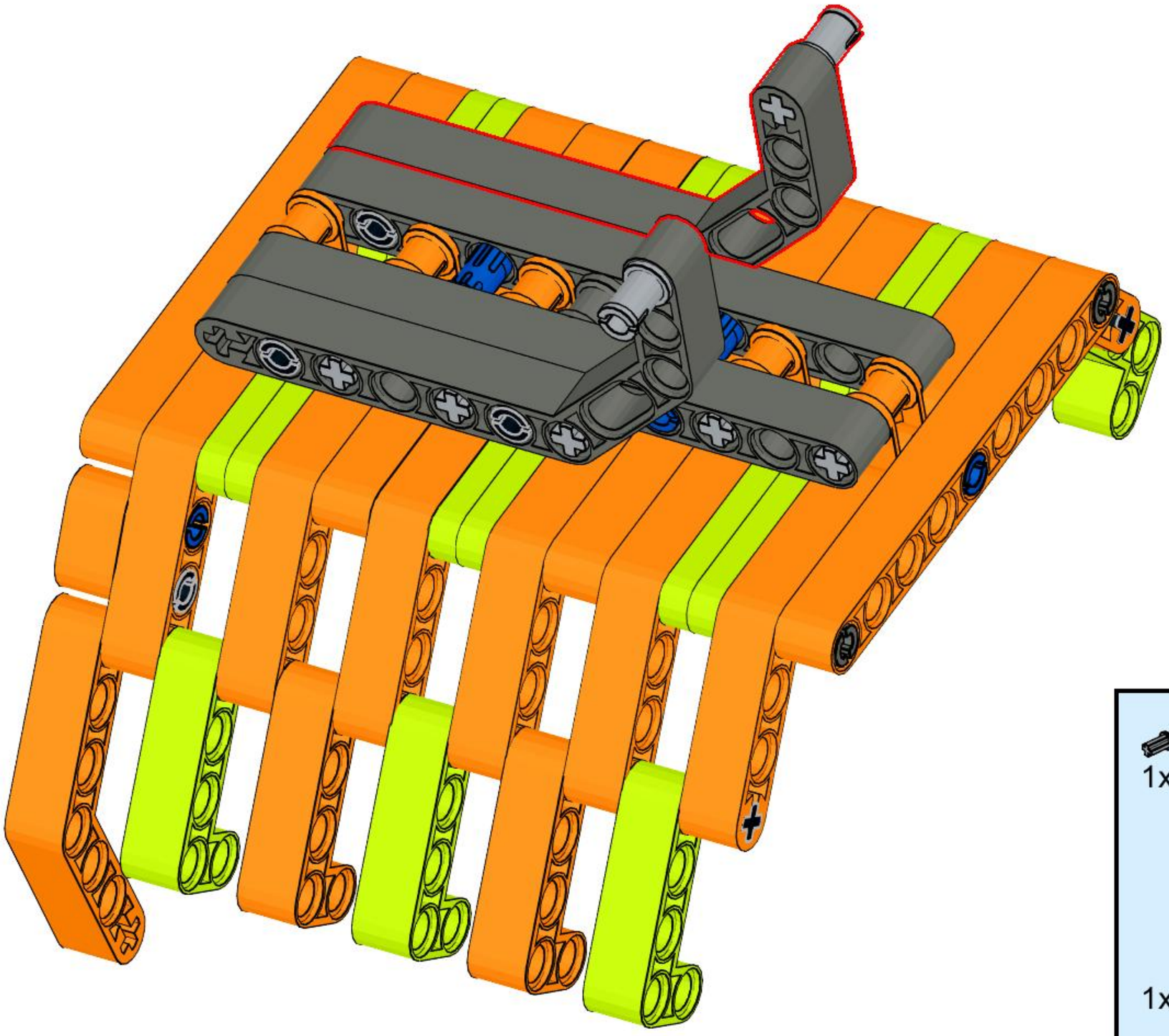

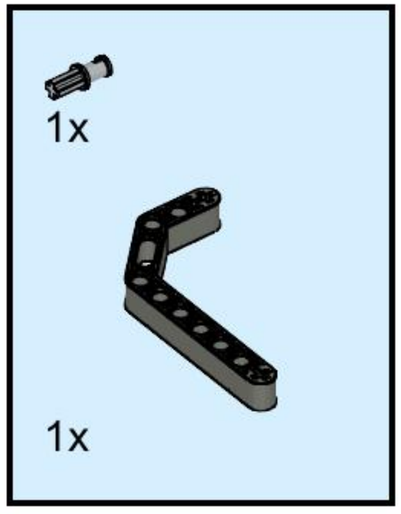

# 102

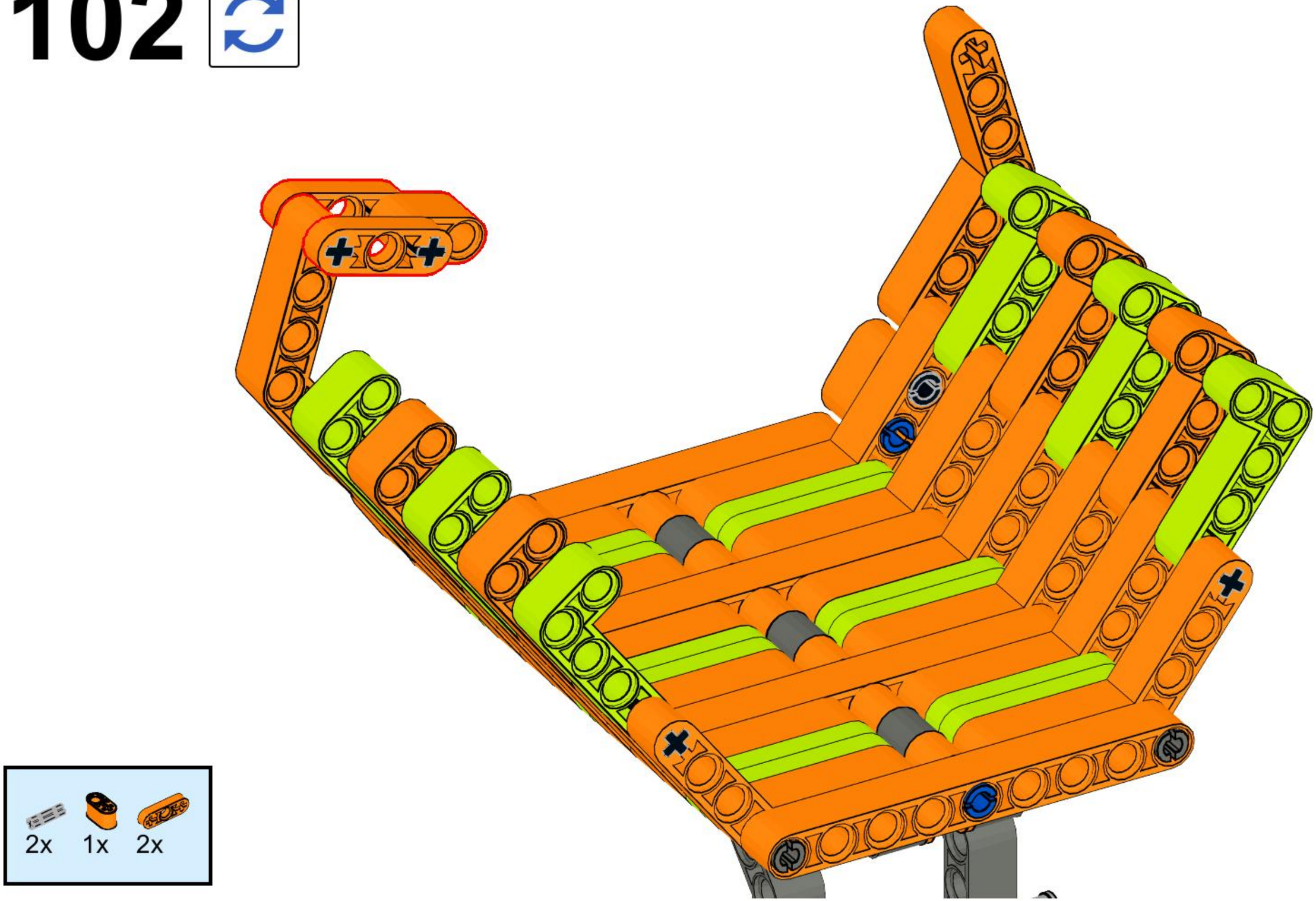

# 103

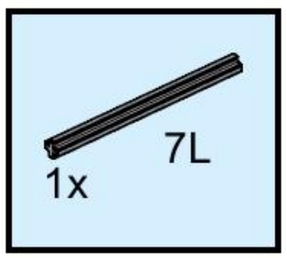

# 104

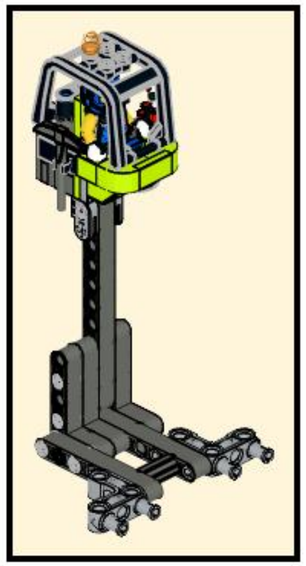

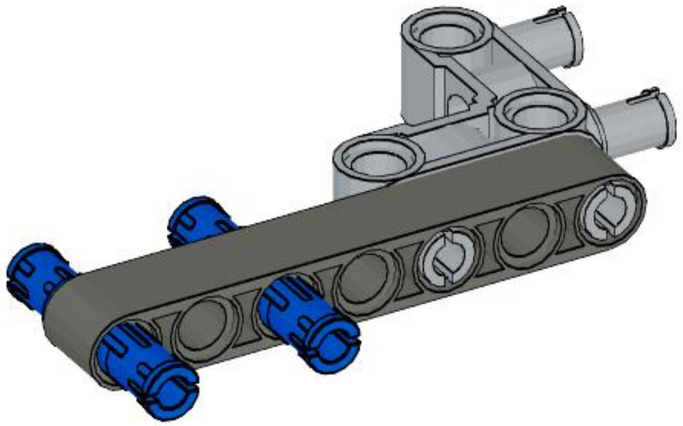

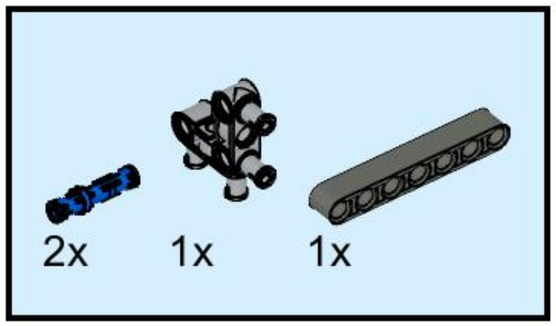

# 105

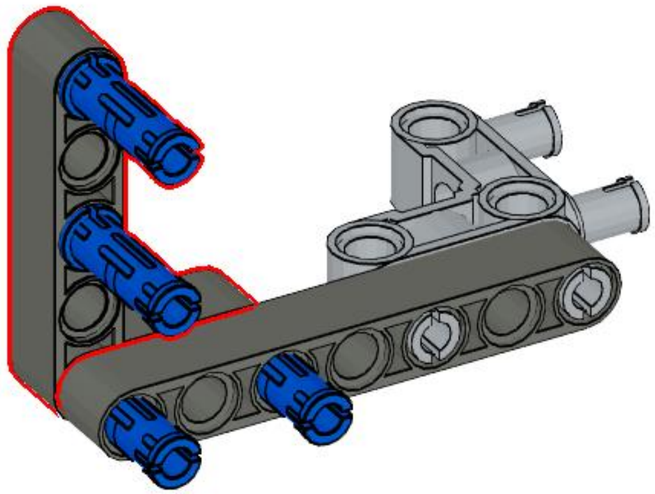

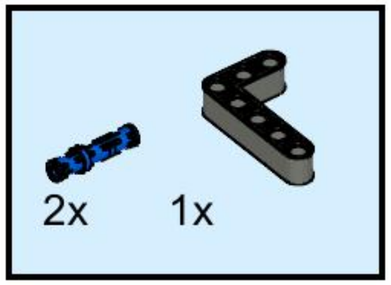

# 106

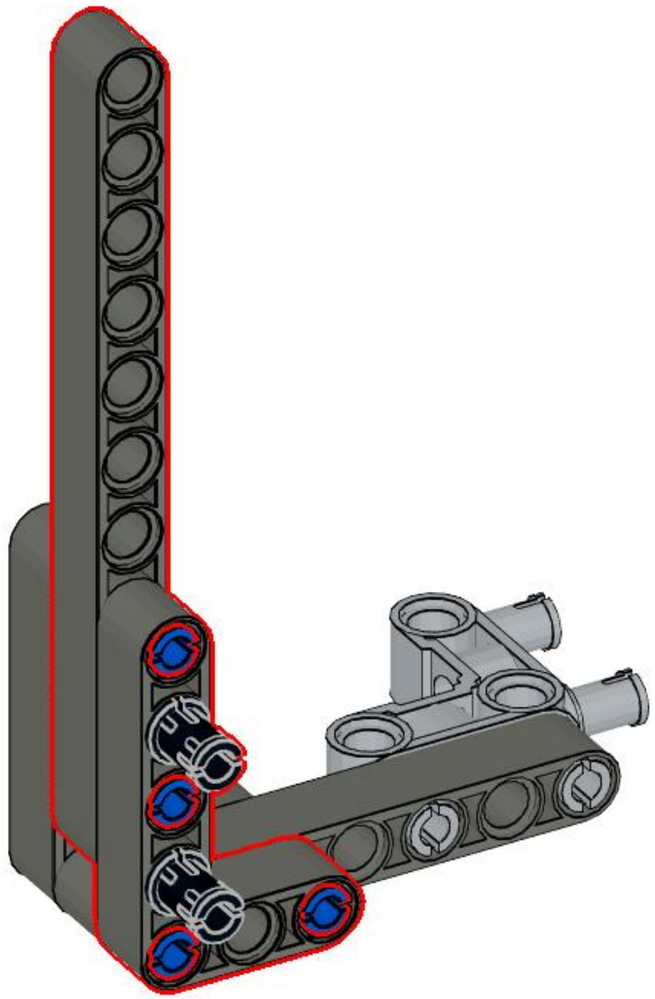

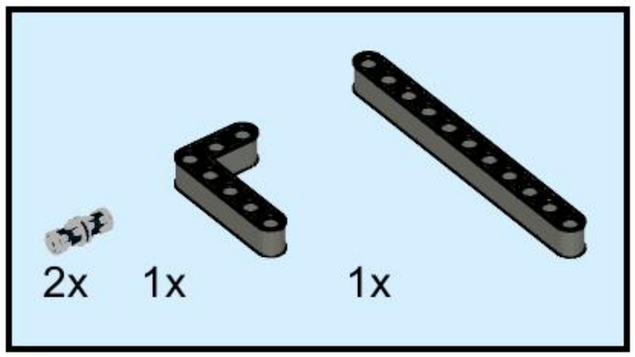

# 107

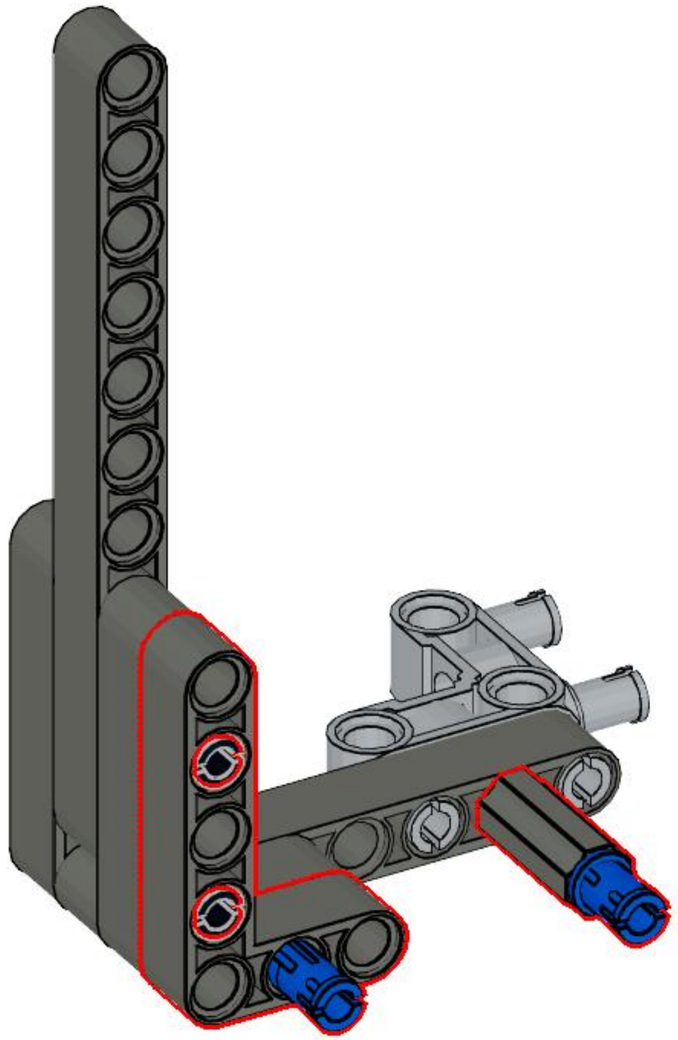

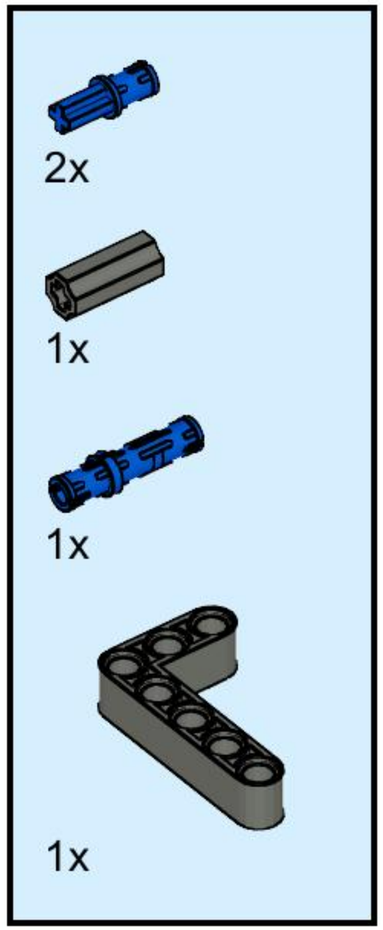

# 108

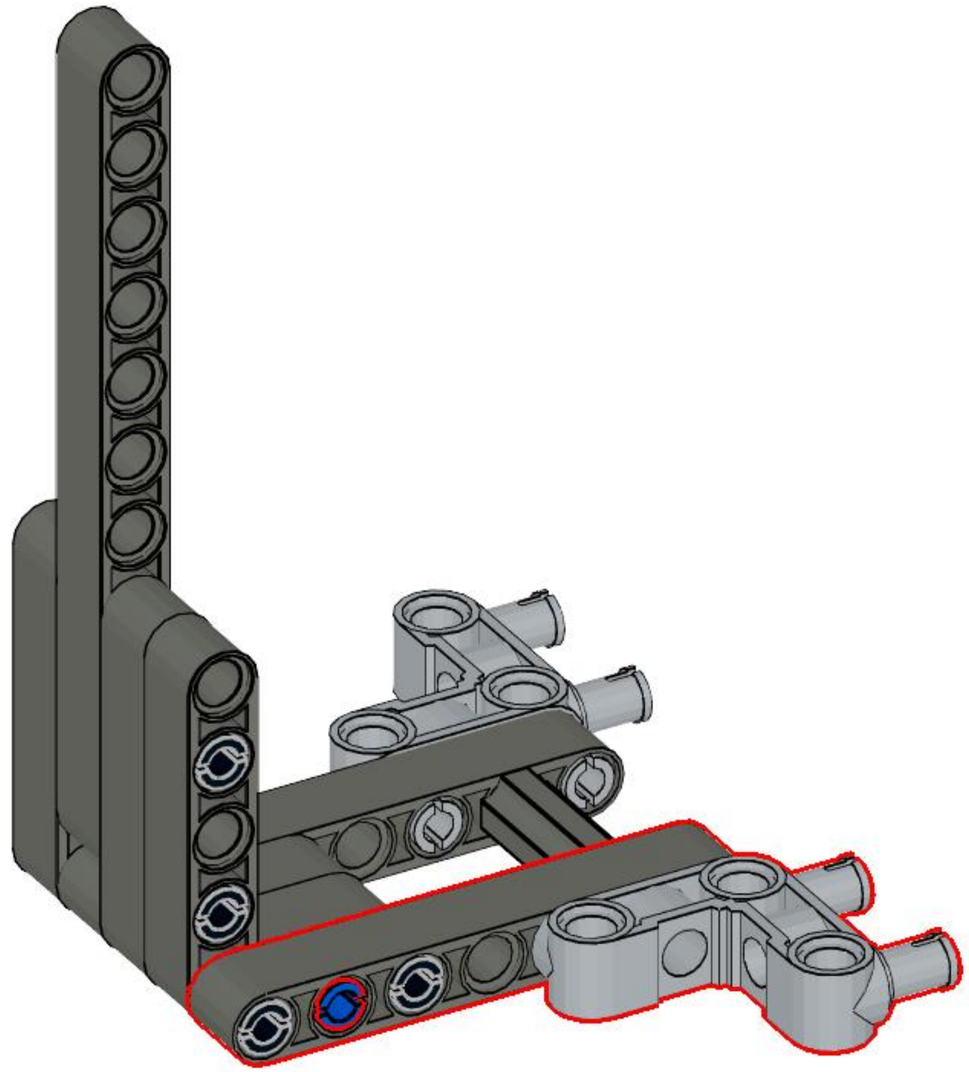

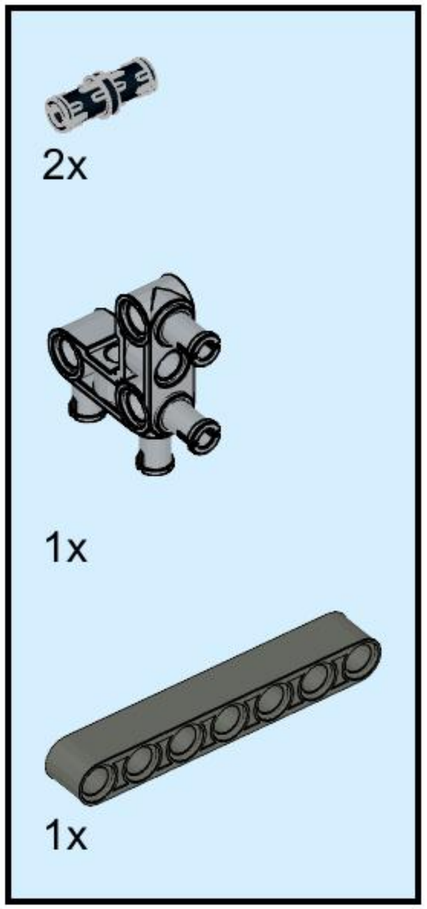

# 109

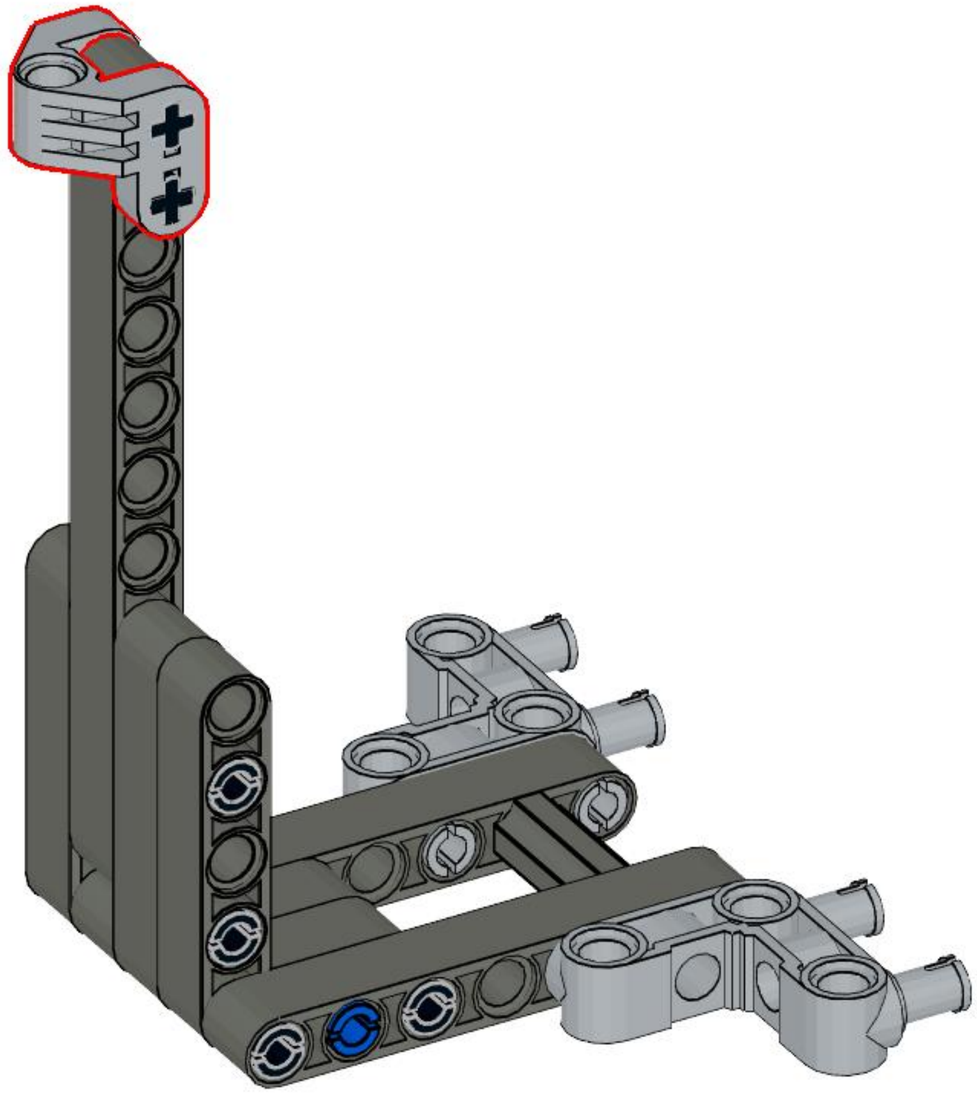

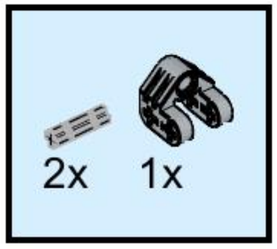

# 110

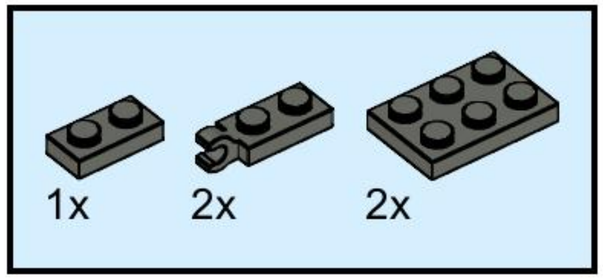


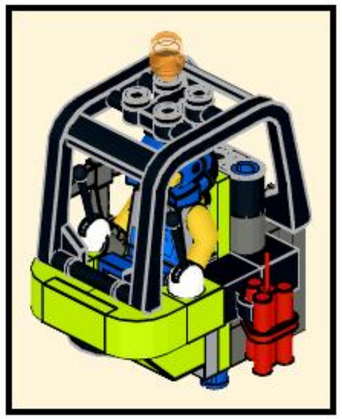

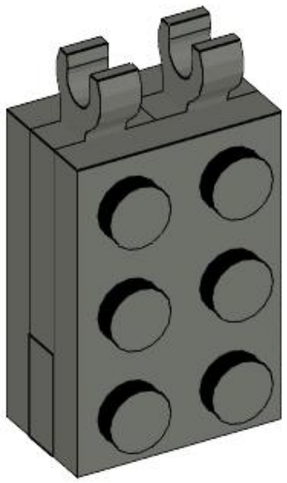

# 111

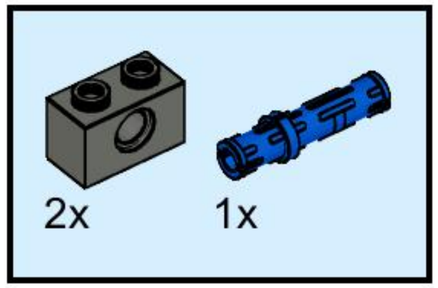


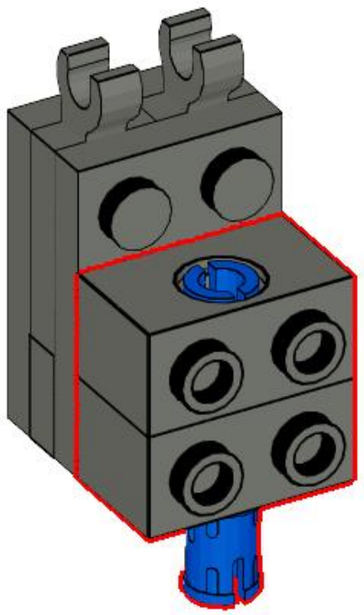

# 112

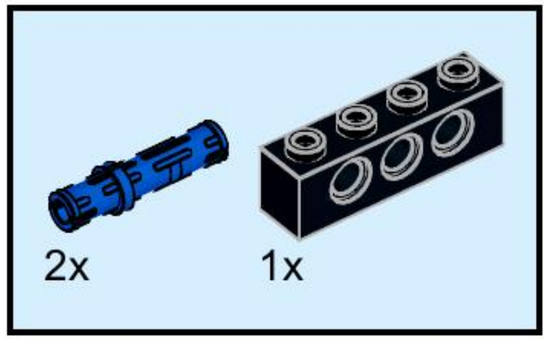


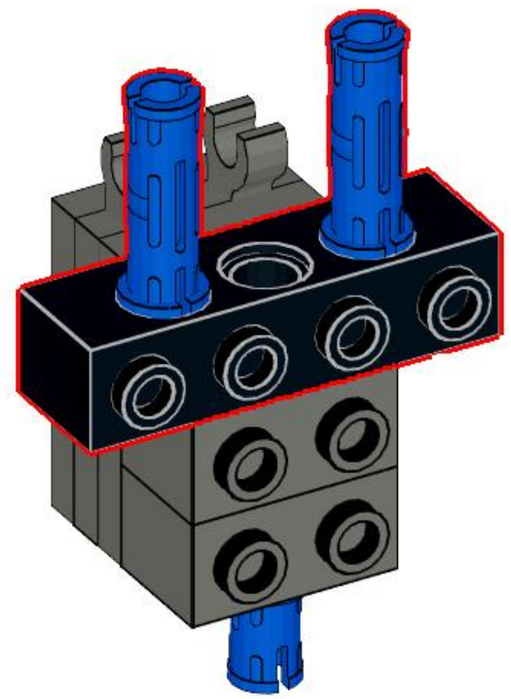

# 113

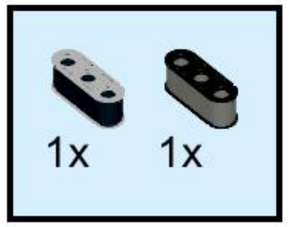


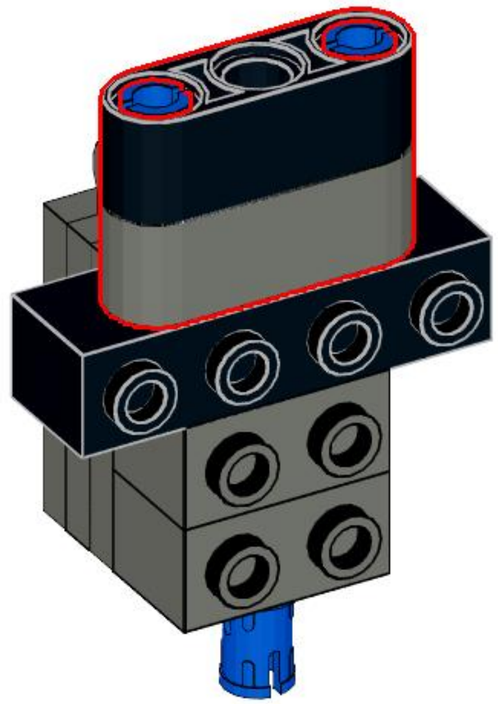

# 114

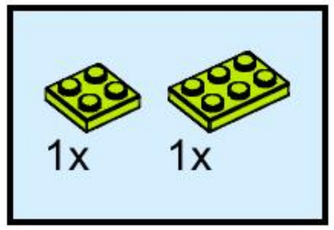


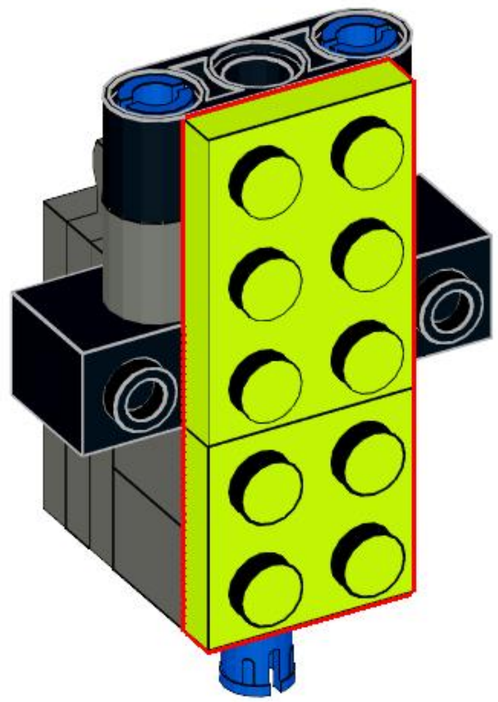

# 115

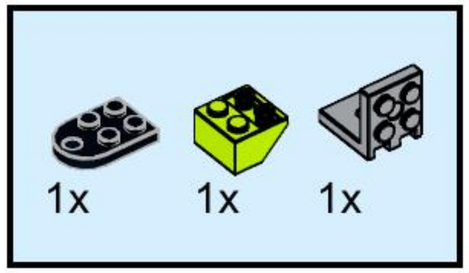


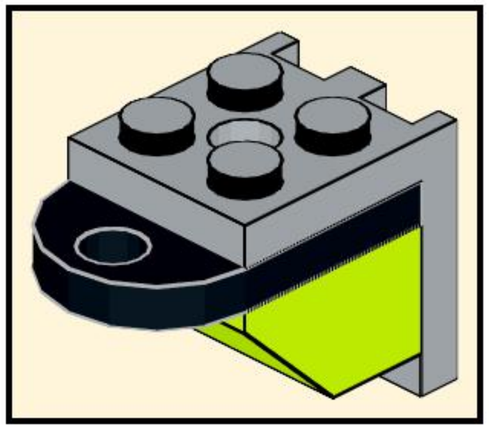

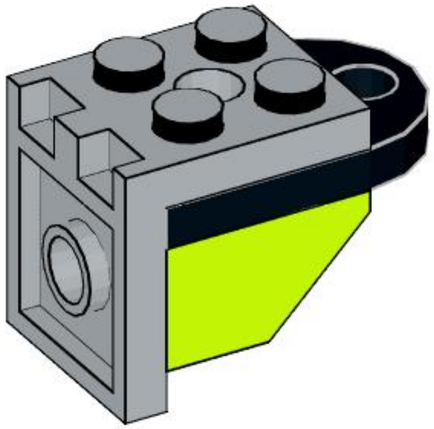

# 116

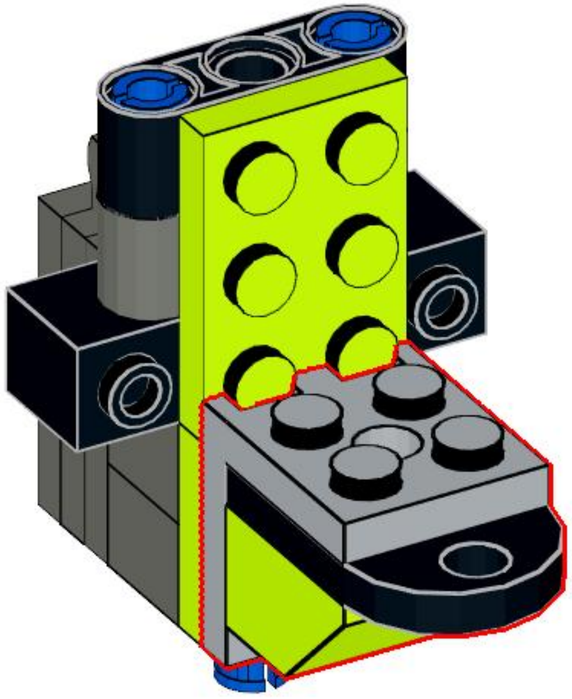

# 117

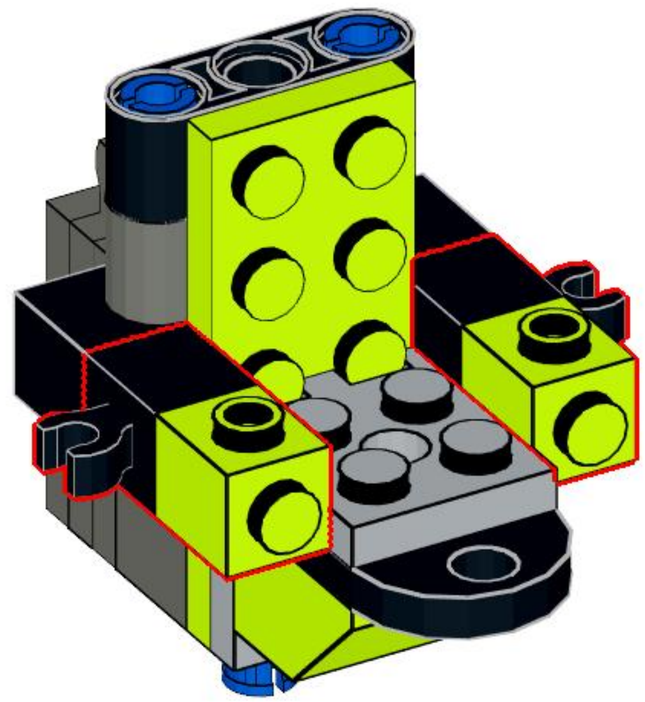

# 118

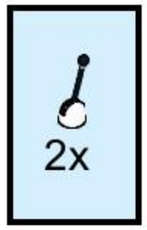


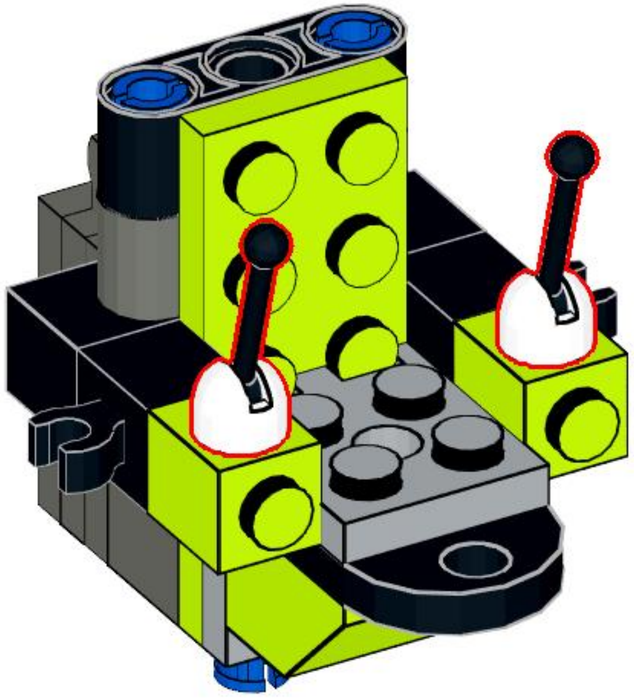

# 119

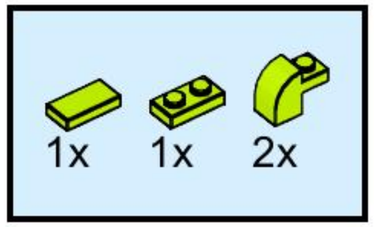


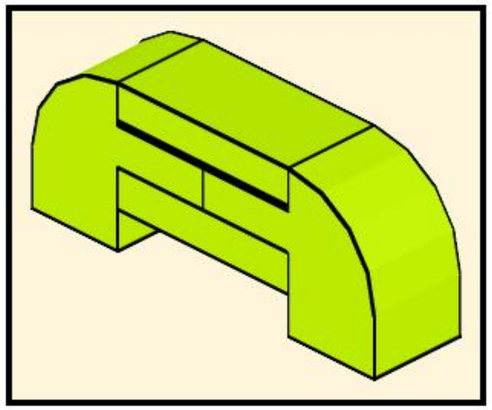

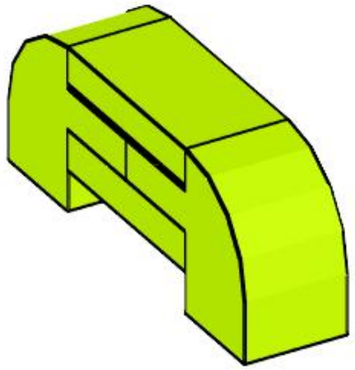

# 120

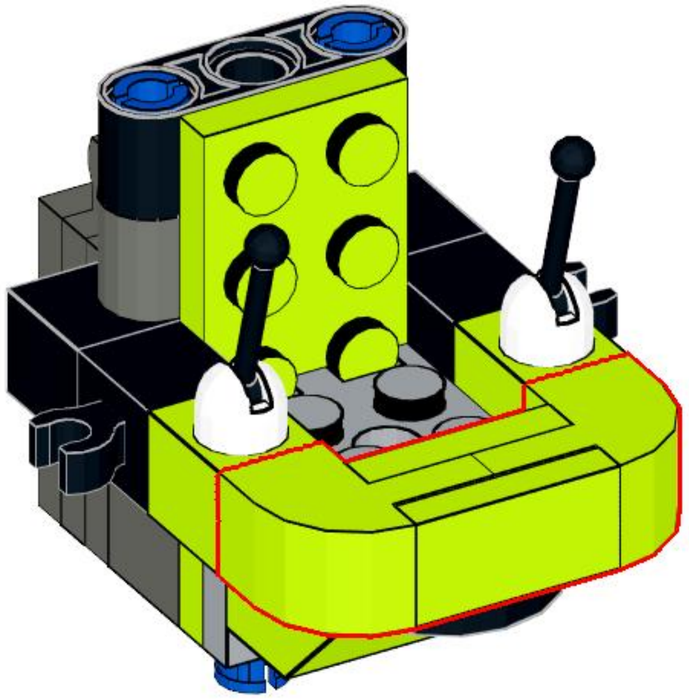

# 121

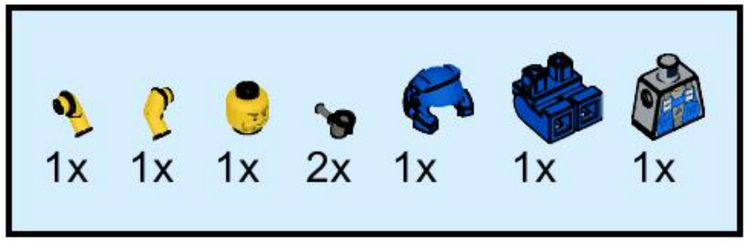

# 122

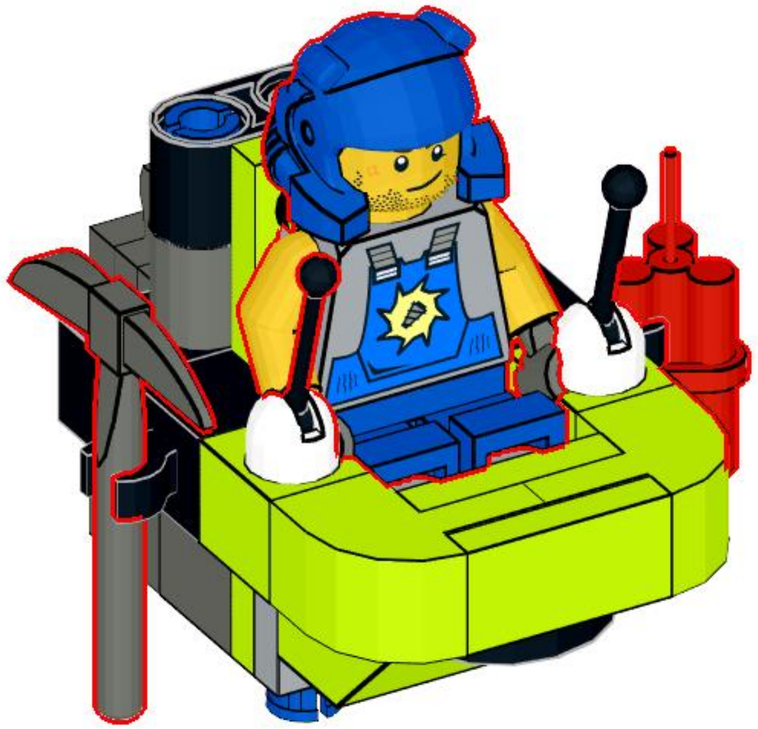

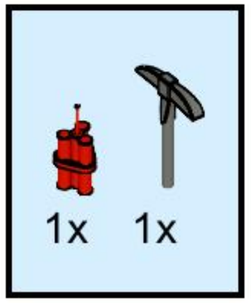

# 123

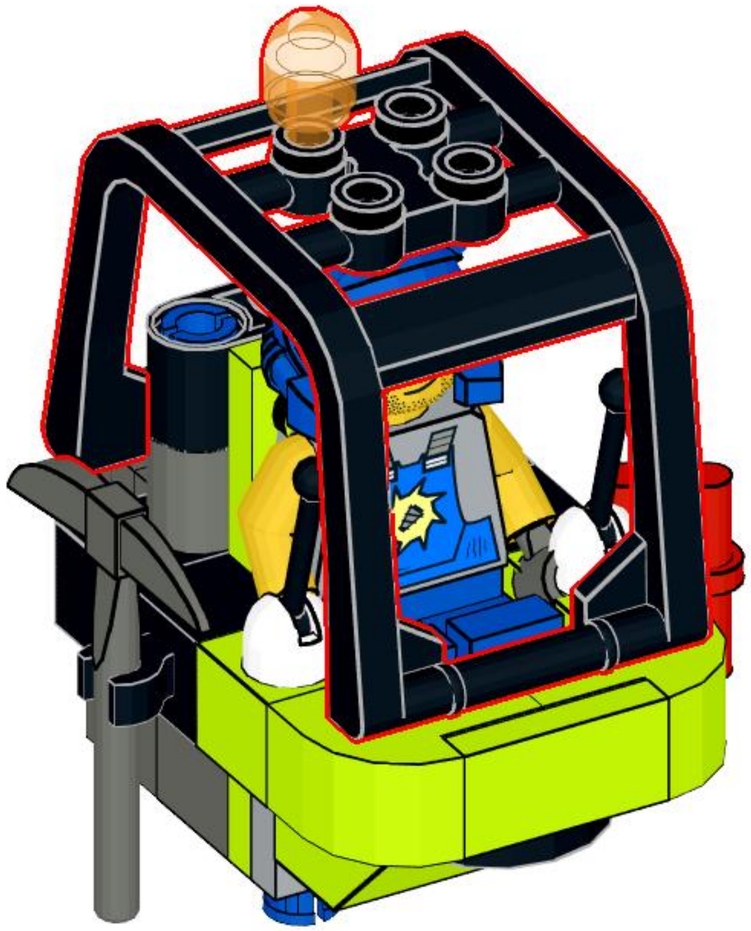

# 124

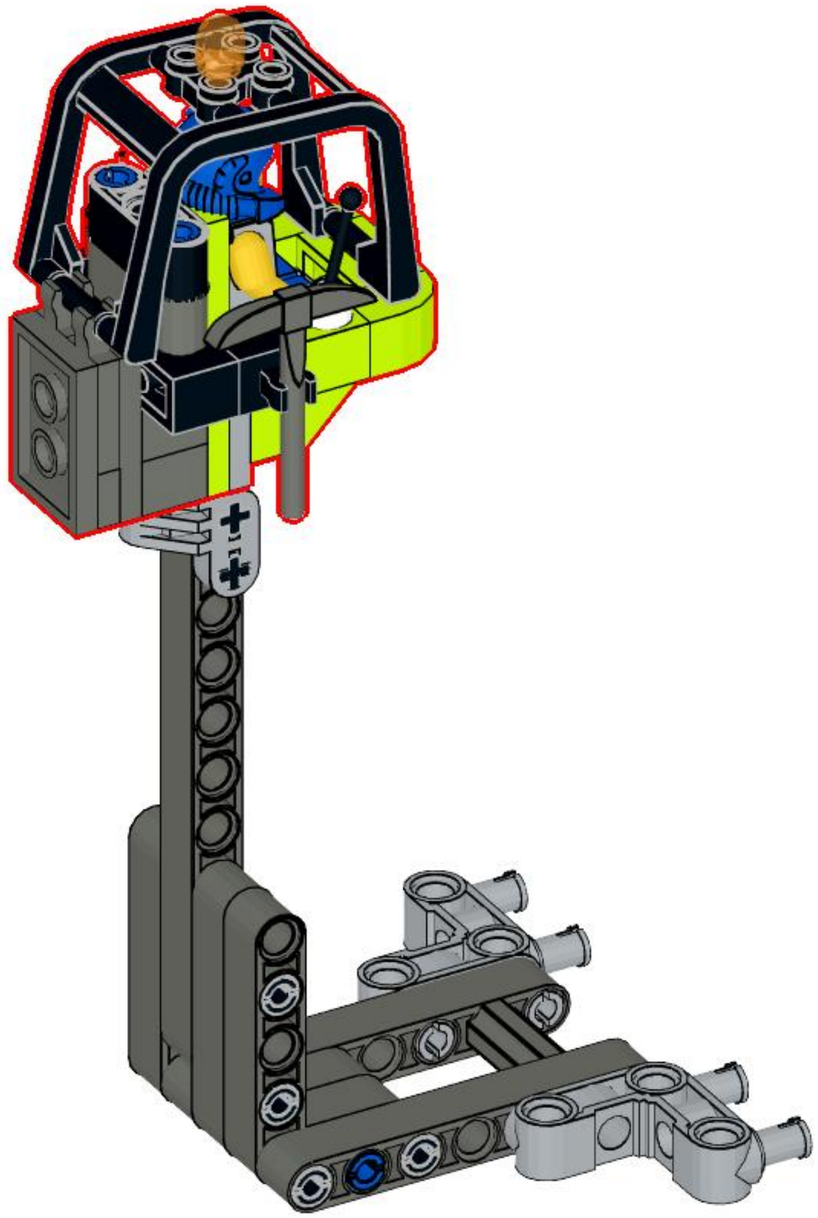

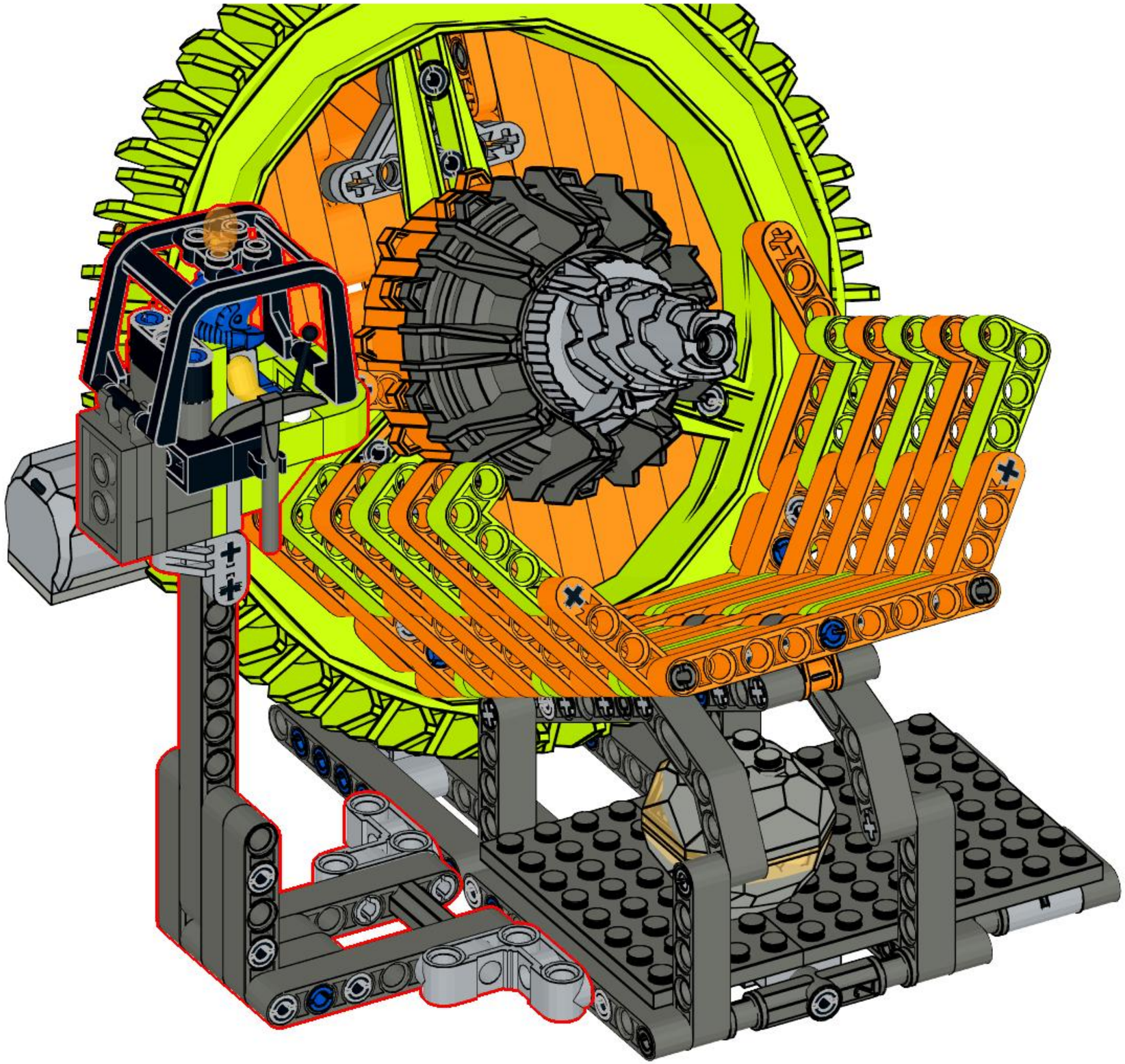

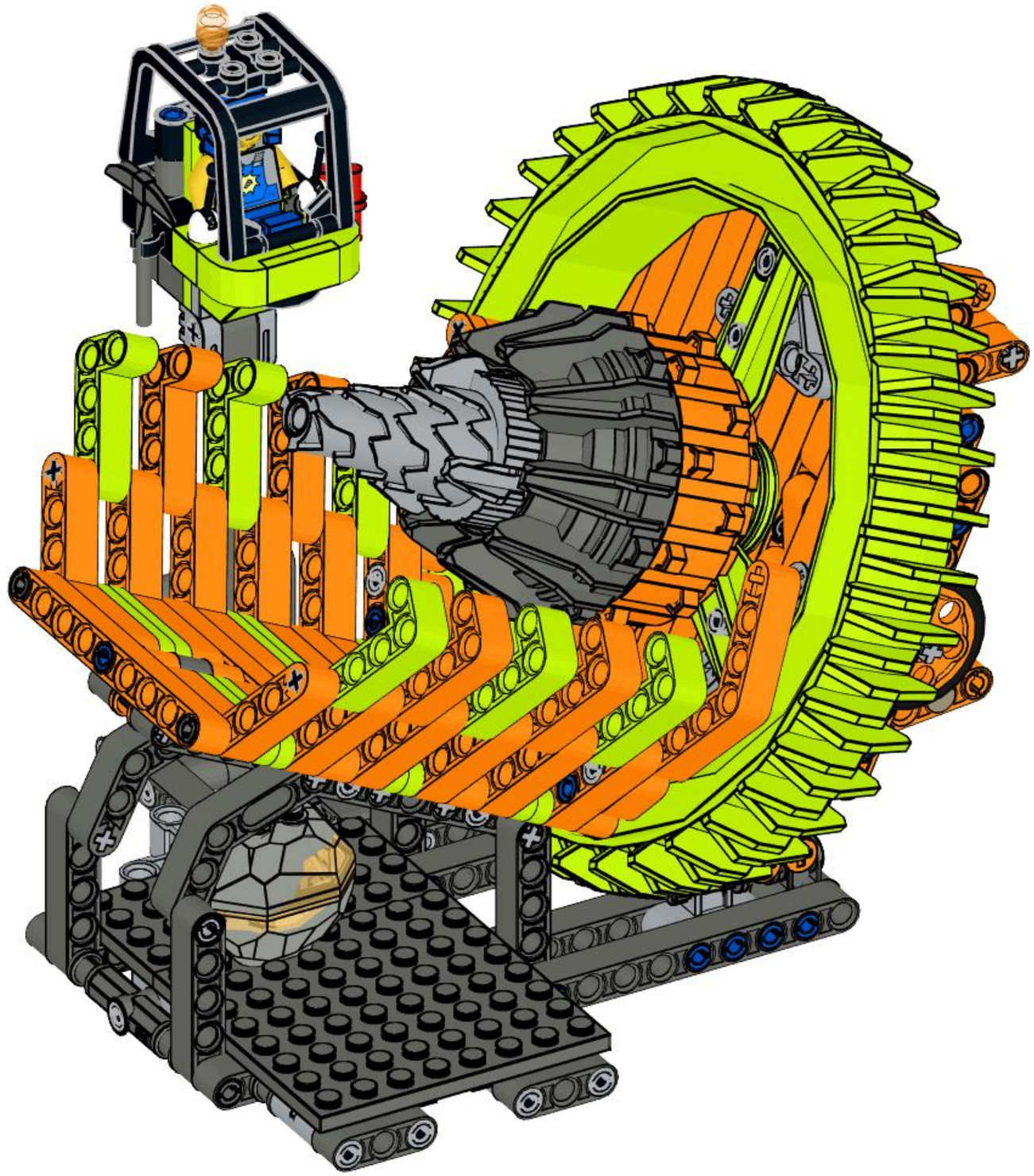

7x
32062, 11

53x
2780, 11

2x
60476, 11

1x
32523, 11

1x
18651, 11

1x
3176, 11

1x
3705, 11

1x
3701, 11

1x
64450, 11

5x
3708, 11

2x
18654, 85

2x
983, 85

2x
32002, 85

2x
10928, 85

1x
3023, 85

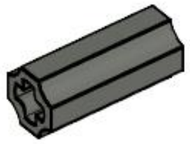

1x
6538c, 85

1x
6536, 85

2x
3700, 85

4x
32291, 85

2x
63868, 85

3x
32523, 85

7x
11214, 85

6x
32054, 85

3x
32034, 85

1x
6587, 85

2x
3021, 85

2x
87083, 85

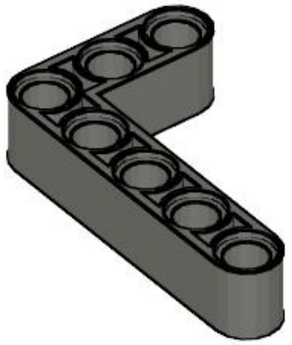

7x
32526, 85

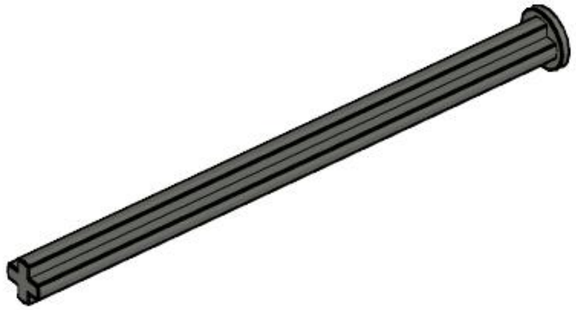

2x
55013, 85

1x
3841, 85

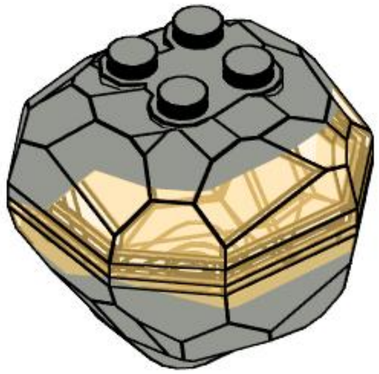

1x
30294c01pb01, 85

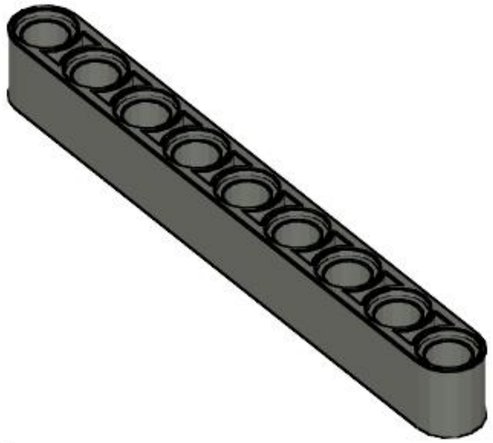

4x
40490, 85

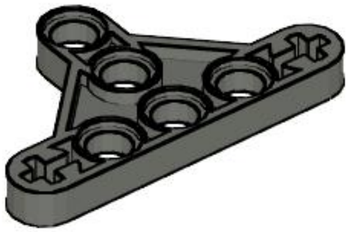

3x
99773, 85

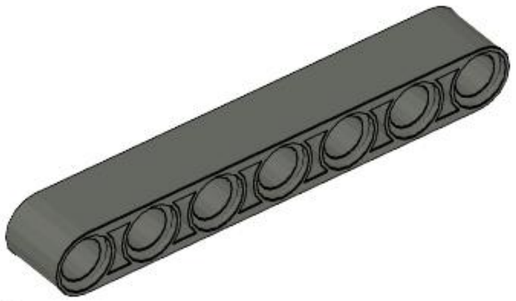

2x
32524, 85

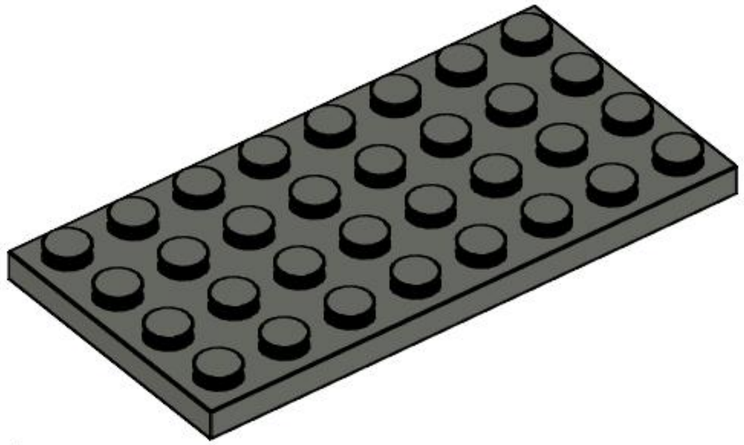

1x
3035, 85

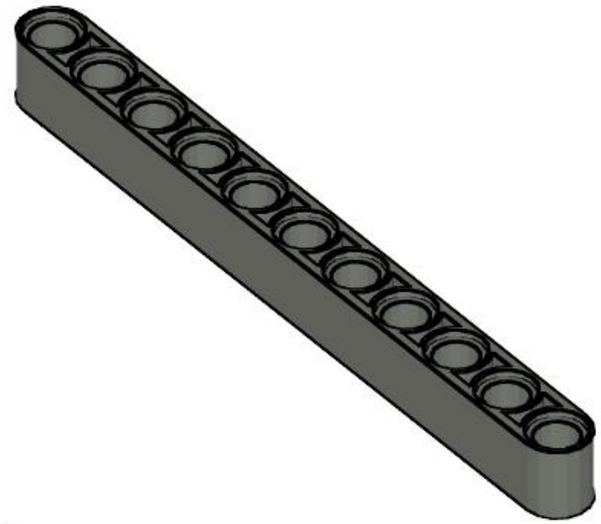

5x
32525, 85

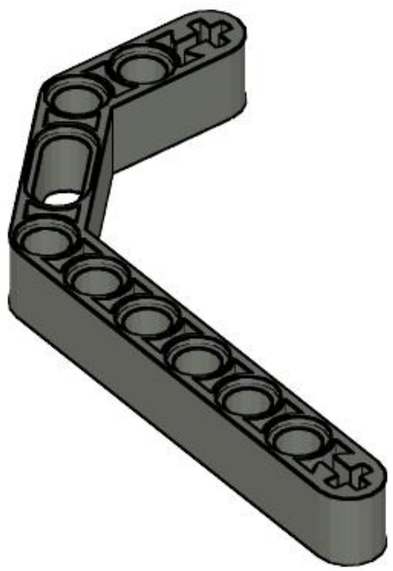

2x
32009, 85

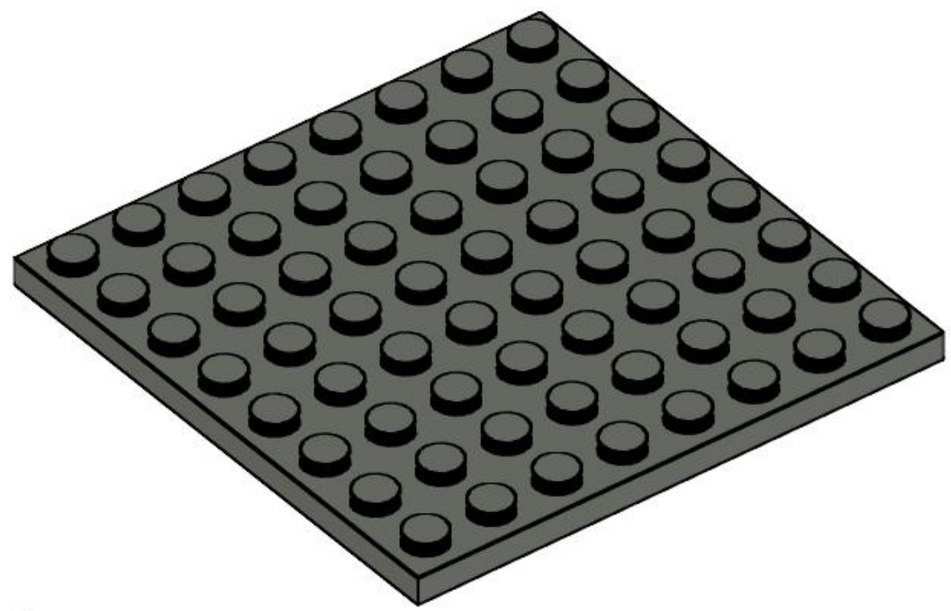

1x
41539, 85

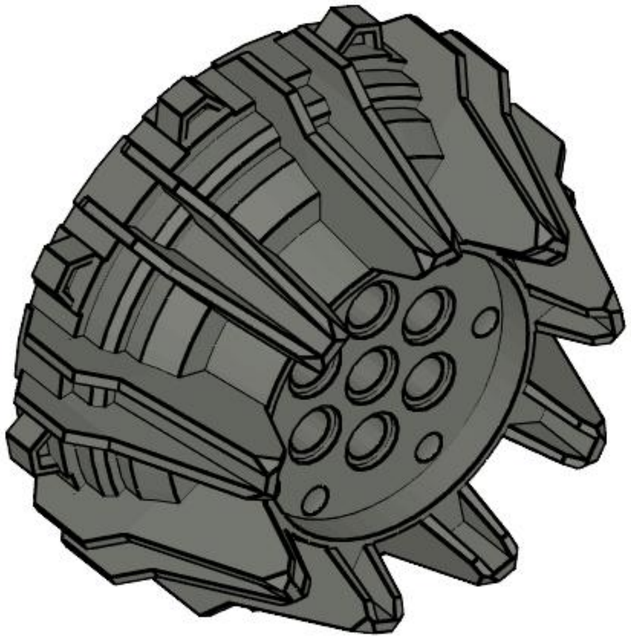

1x
64712, 85

3x
4265c, 86

5x
3713, 86

5x
3749, 86

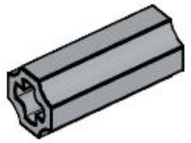

1x
6538c, 86

2x
62462, 86

1x
4716, 86

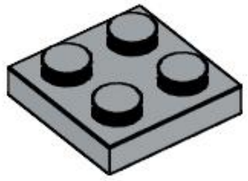

1x
3022, 86

1x
973pb0536, 86

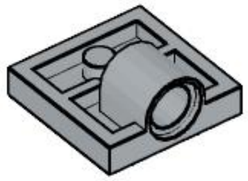

6x
2444, 86

5x
4519, 86

3x
94925, 86

1x
92907, 86

2x
63869, 86

2x
3021, 86

1x
32269, 86

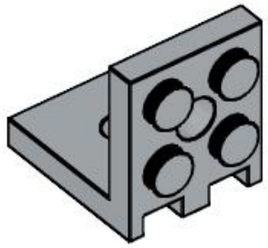

1x
3956, 86

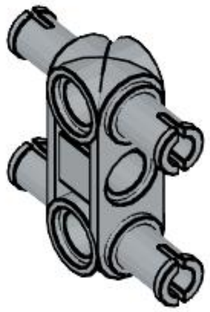

1x
48989, 86

1x
3650b, 86

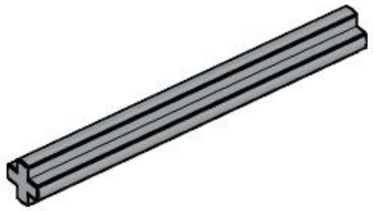

6x
32073, 86

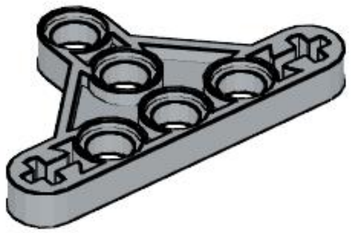

3x
99773, 86

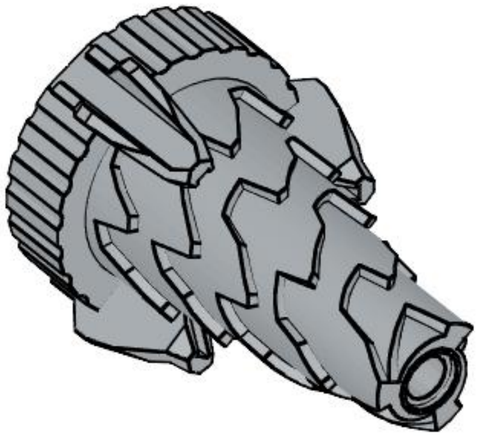

1x
64728, 5

1x
32523, 4

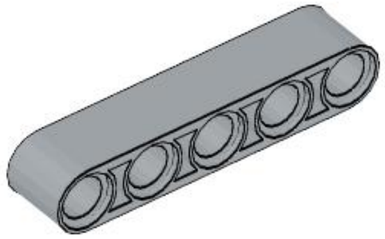

2x
32316, 86

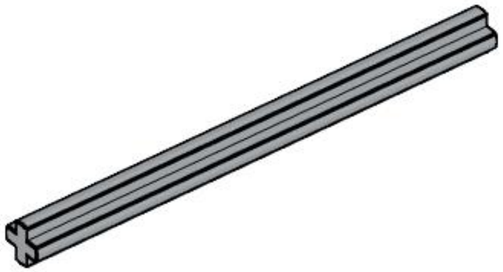

1x
44294, 86

6x
6536, 4

5x
32054, 4

1x
64713, 86

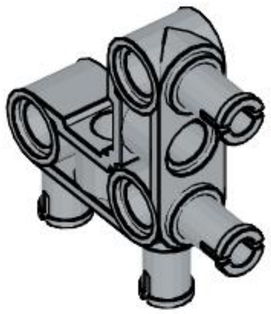

2x
55615, 86

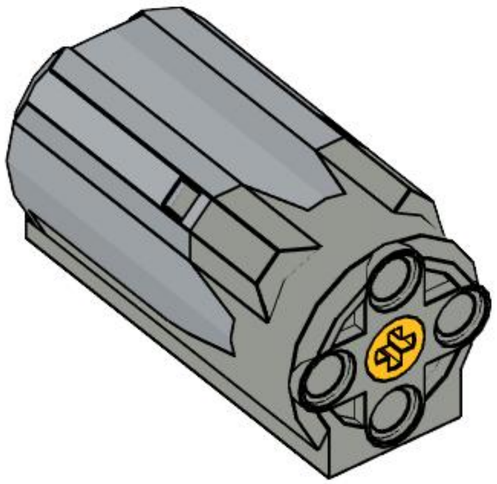

1x
58120c01, 86

2x
4592c02, 1

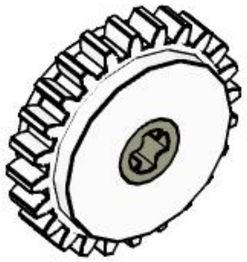

1x
60c01, 1

6x
60483, 4

2x
32056, 4

2x
6632, 4

3x
4185, 4

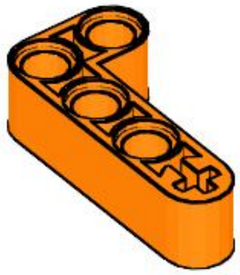

8x
32140, 4

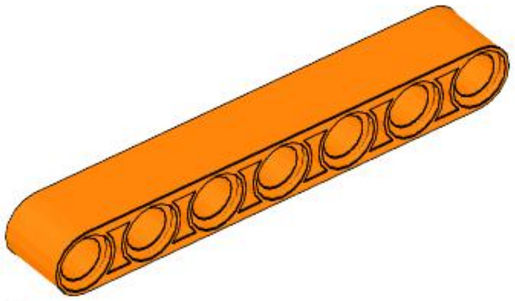

2x
32524, 4

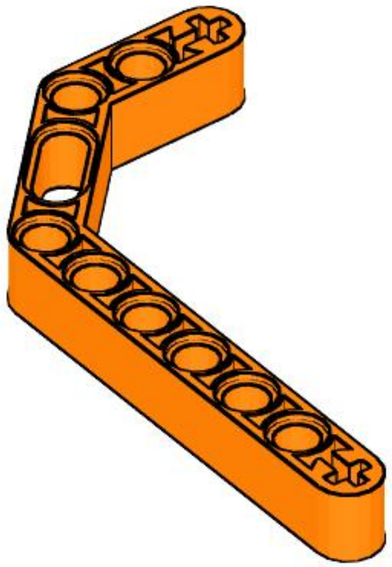

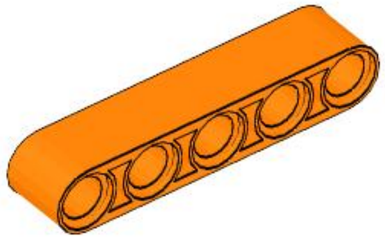

5x
32316, 4

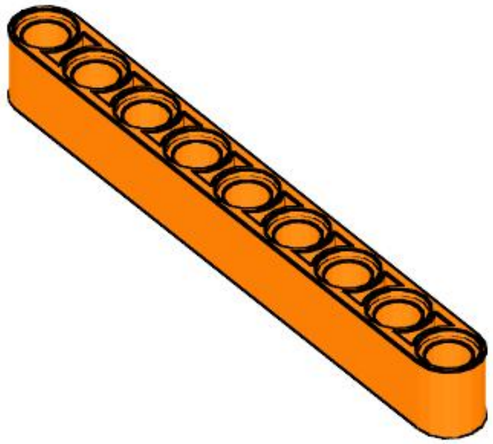

6x
40490, 4

2x
32009, 4

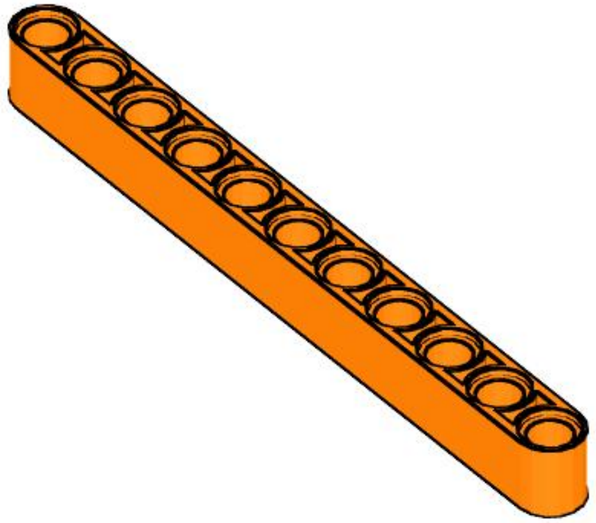

14x
32348, 4

2x
32525, 4

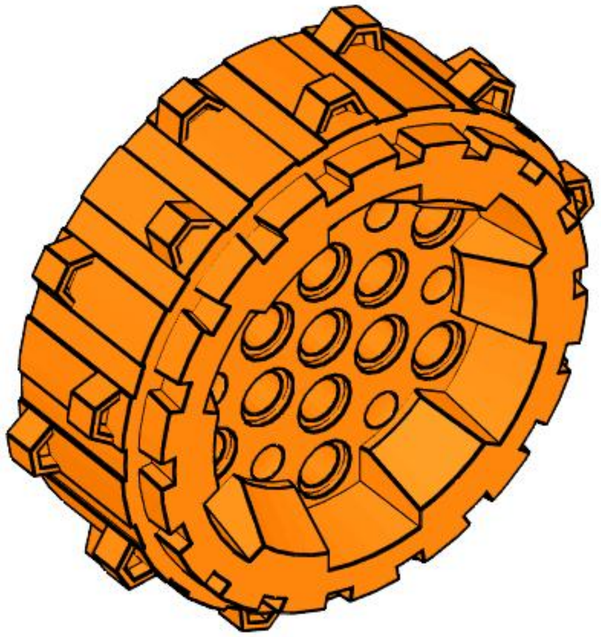

1x
64711, 4

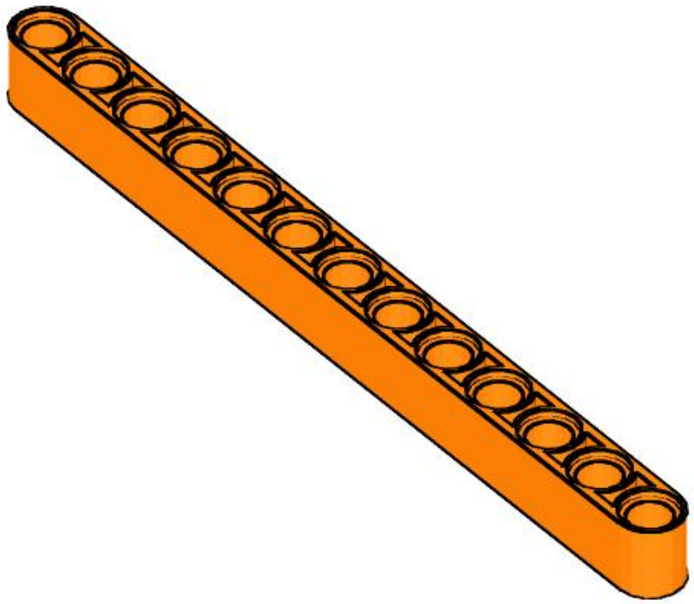

4x
41239, 4

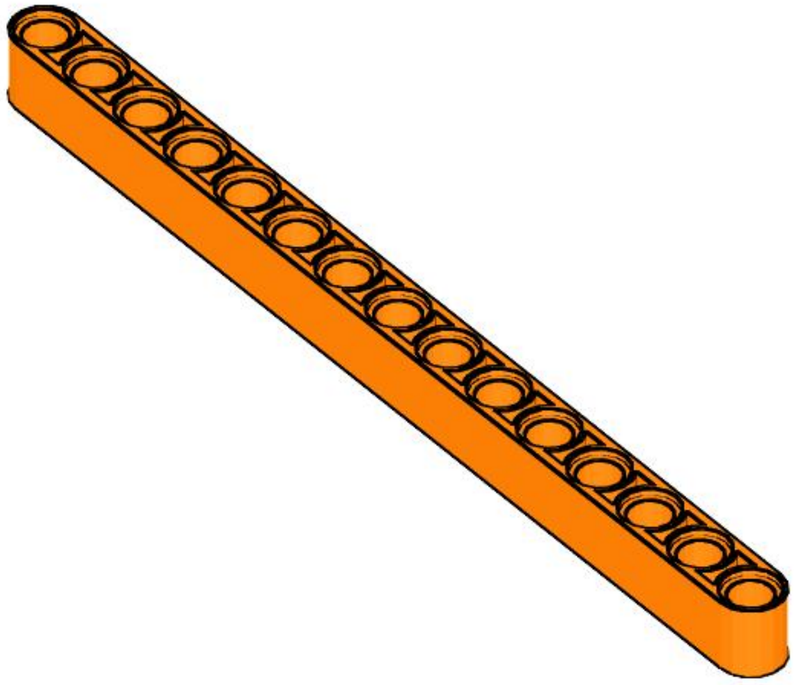

4x
32278, 4

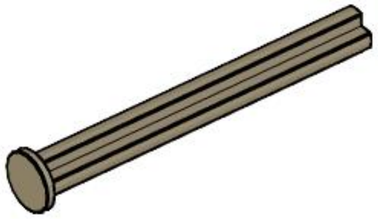

1x
15462, 69

2x
6091, 34

2x
3749, 2

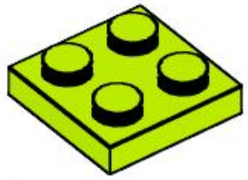

1x
3022, 34

2x
87087, 34

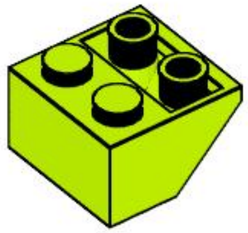

1x
3660, 34

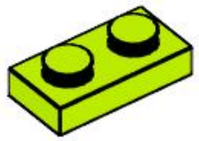

1x
3023, 34

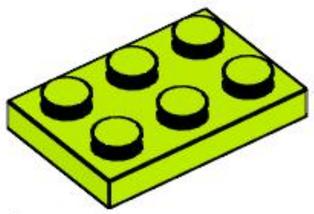

1x
3021, 34

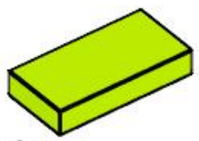

1x
3069b, 34

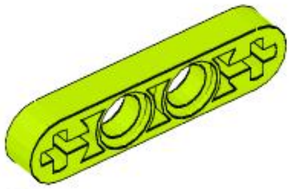

12x
32449, 34

2x
4185, 34

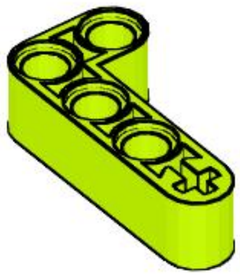

6x
32140, 34

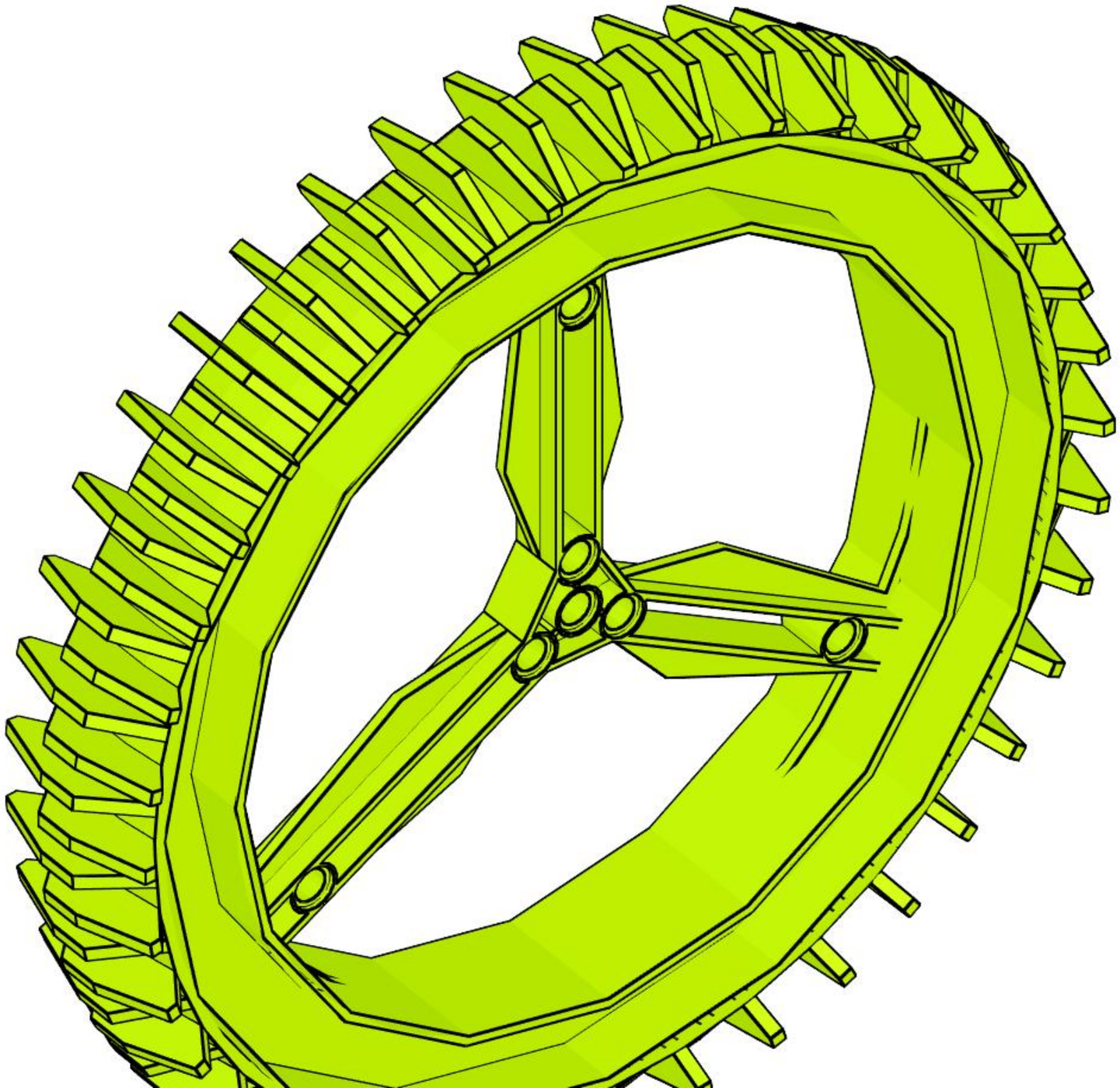

10x
43093, 7

3x
70162, 11

1x
30325, 7

1x
981, 3

48x
6558, 7

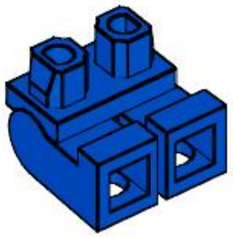

1x
982, 3

1x
970c02, 7

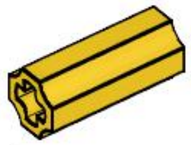

1x
6538c, 3

1x
58176, 98