REF02

TWO SCOOPS

VERSION 1.0

Copyright 2019 Ryk Field
Attribution-NonCommercial 4.0 International (CC BY-NC 4.0)
https://creativecommons.org/licenses/by-nc/4.0/

After designing the Industrial Bucket module (REF01) I wanted to produce a similar module with two alternating arms using some of the leftover buckets from the Bucket Wheel sets I had bought for parts.

The basic design to break the balls into alternating feed paths was done without complications and the arms, using the same mechanism as REF01, were working well mechanically, but one arm threw much further than the other, which was not acceptable. I put the module aside for a few months until I came across the mechanism used by "nxtstep101" on Eurobricks (2014) for his "dual lifting arms". This mechanism was more suitable to what I was after with Two Scoops. After changing the drive mechanism, the arms themselves went through several design changes to become highly reliable.

1

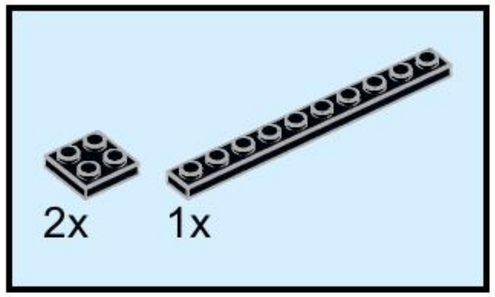

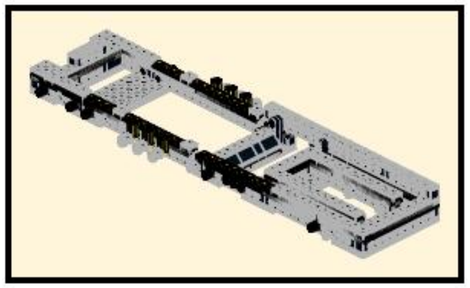

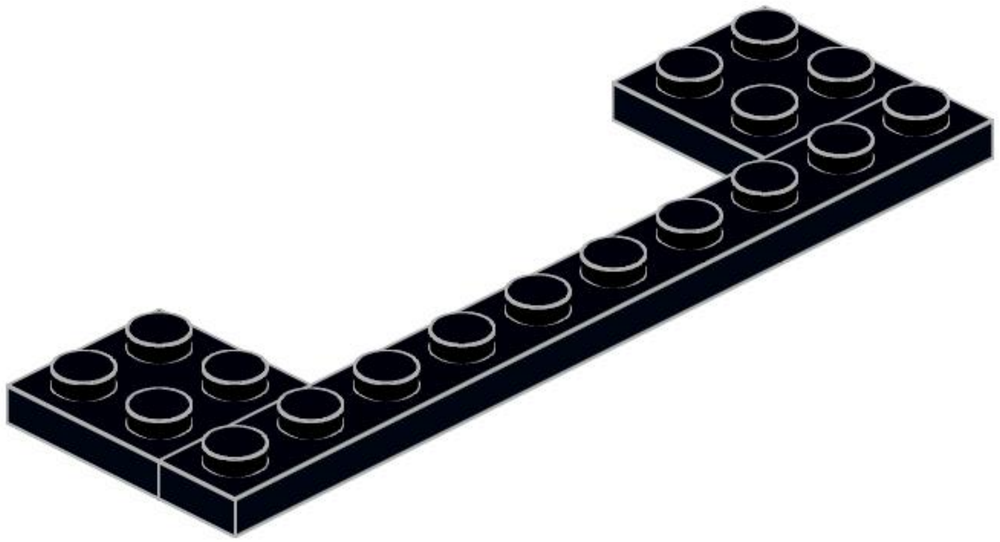

2

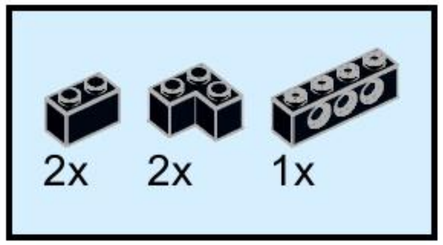

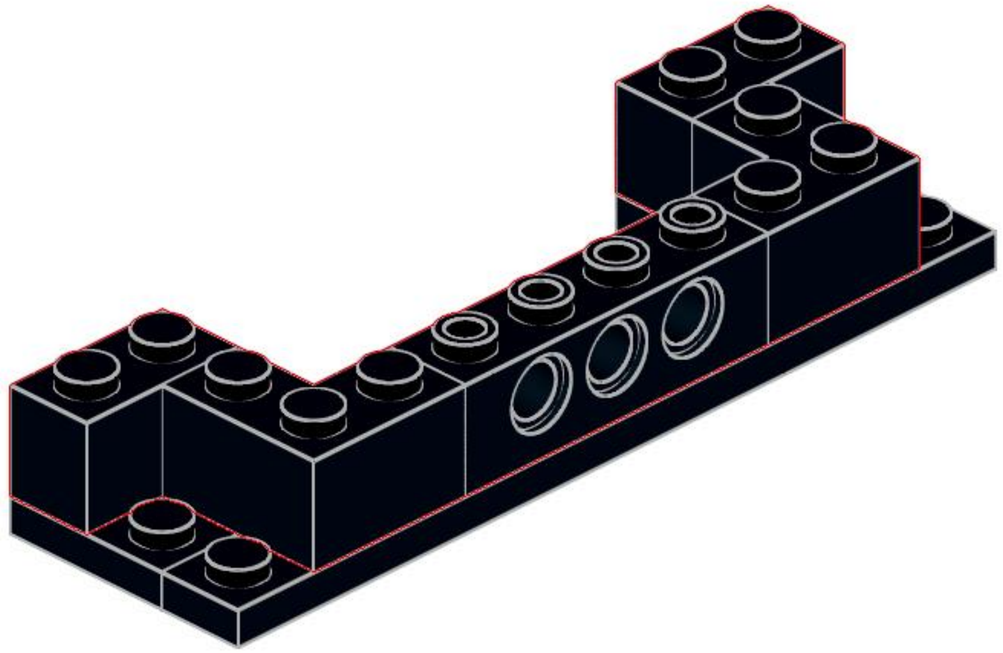

3

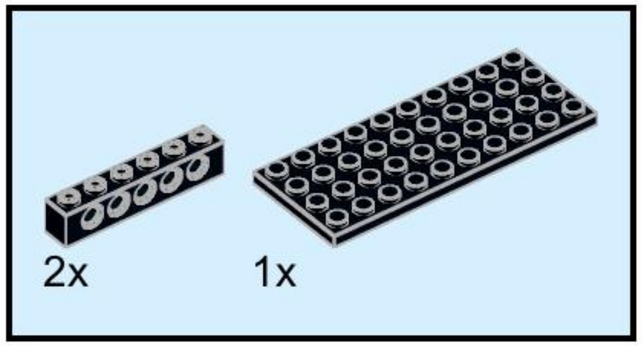

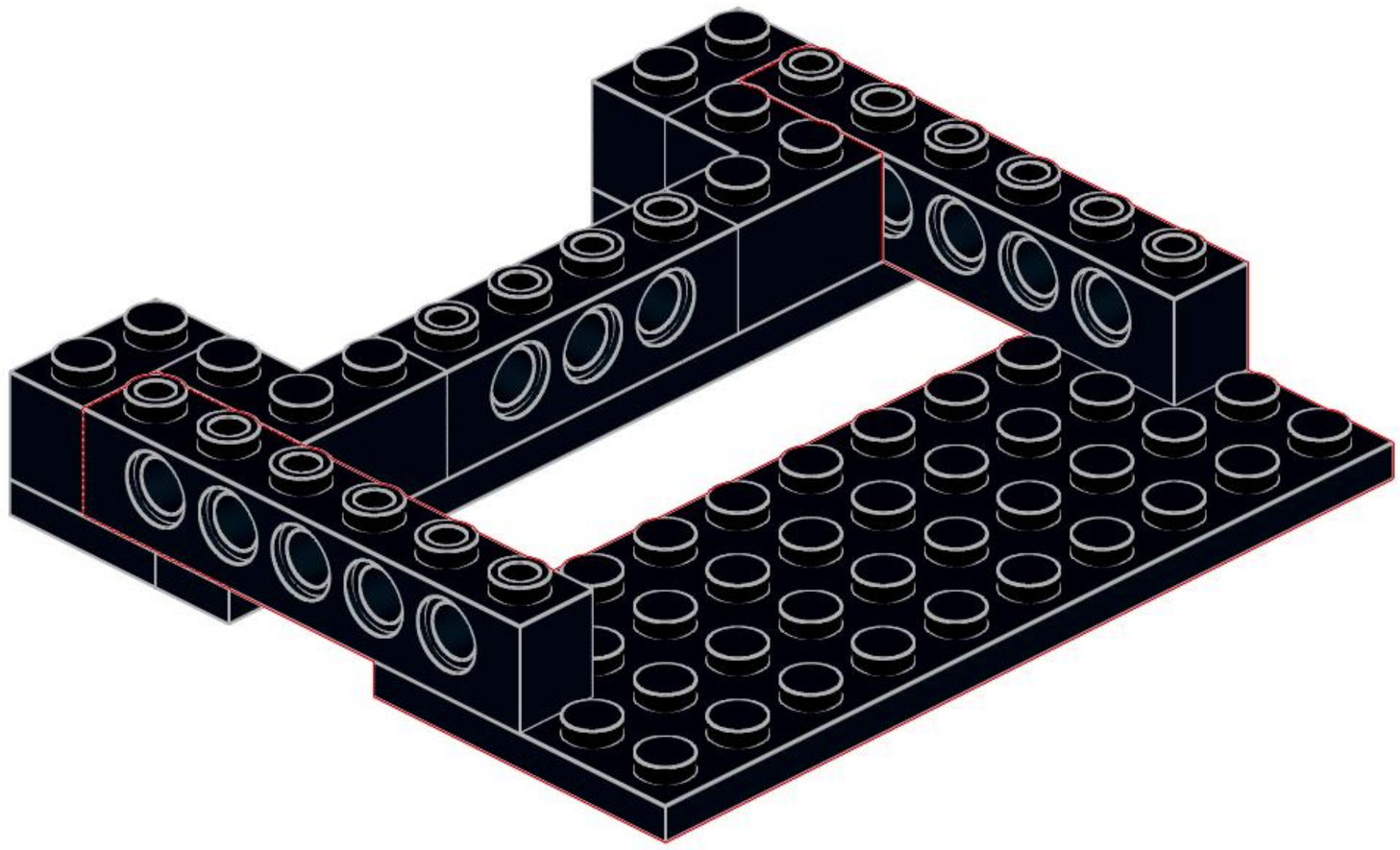

4

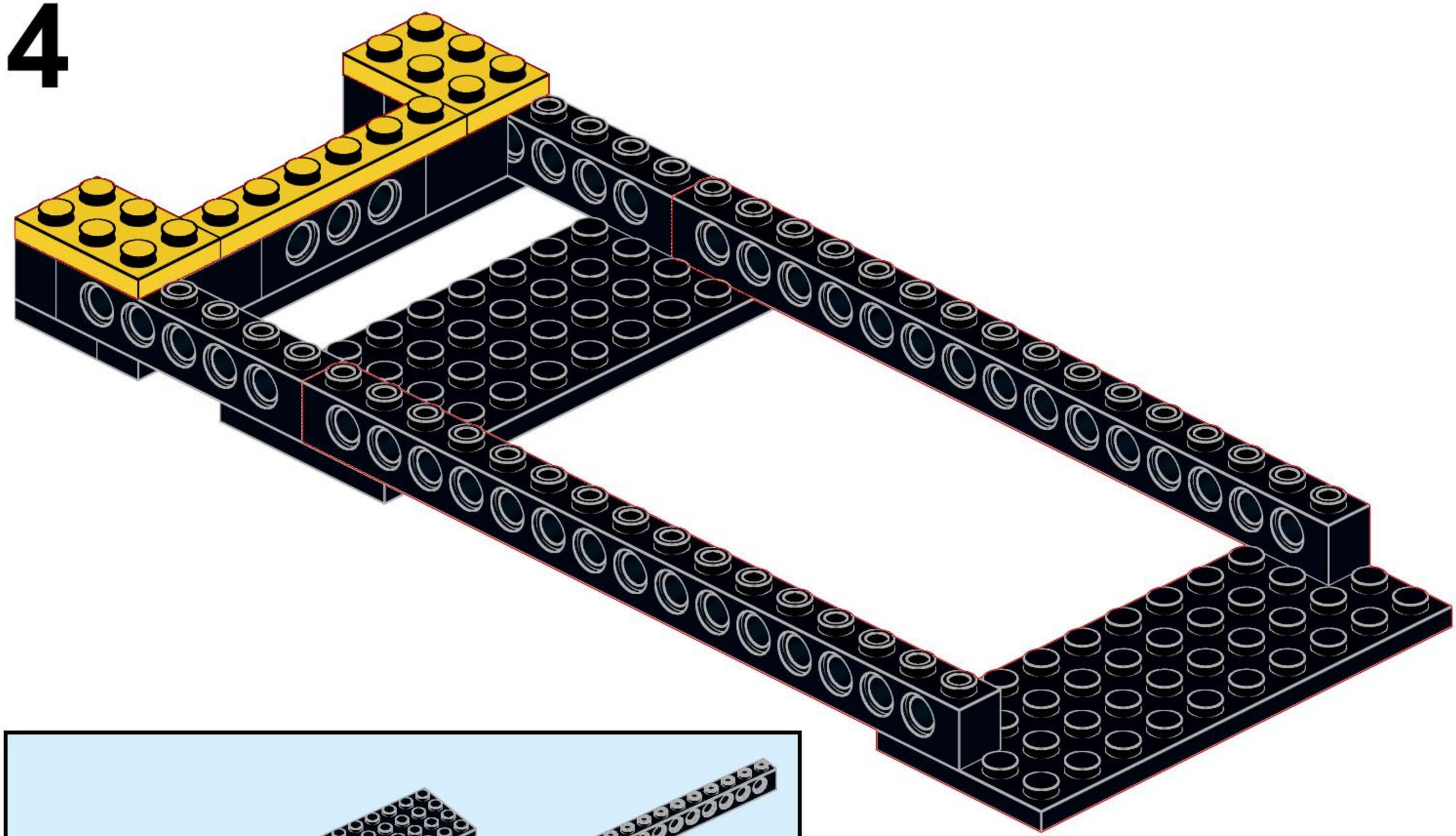

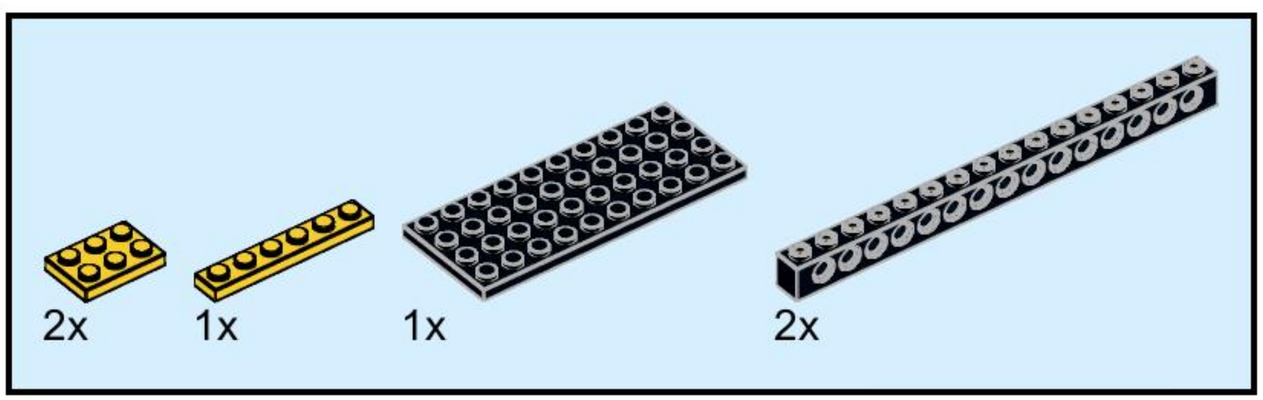

5

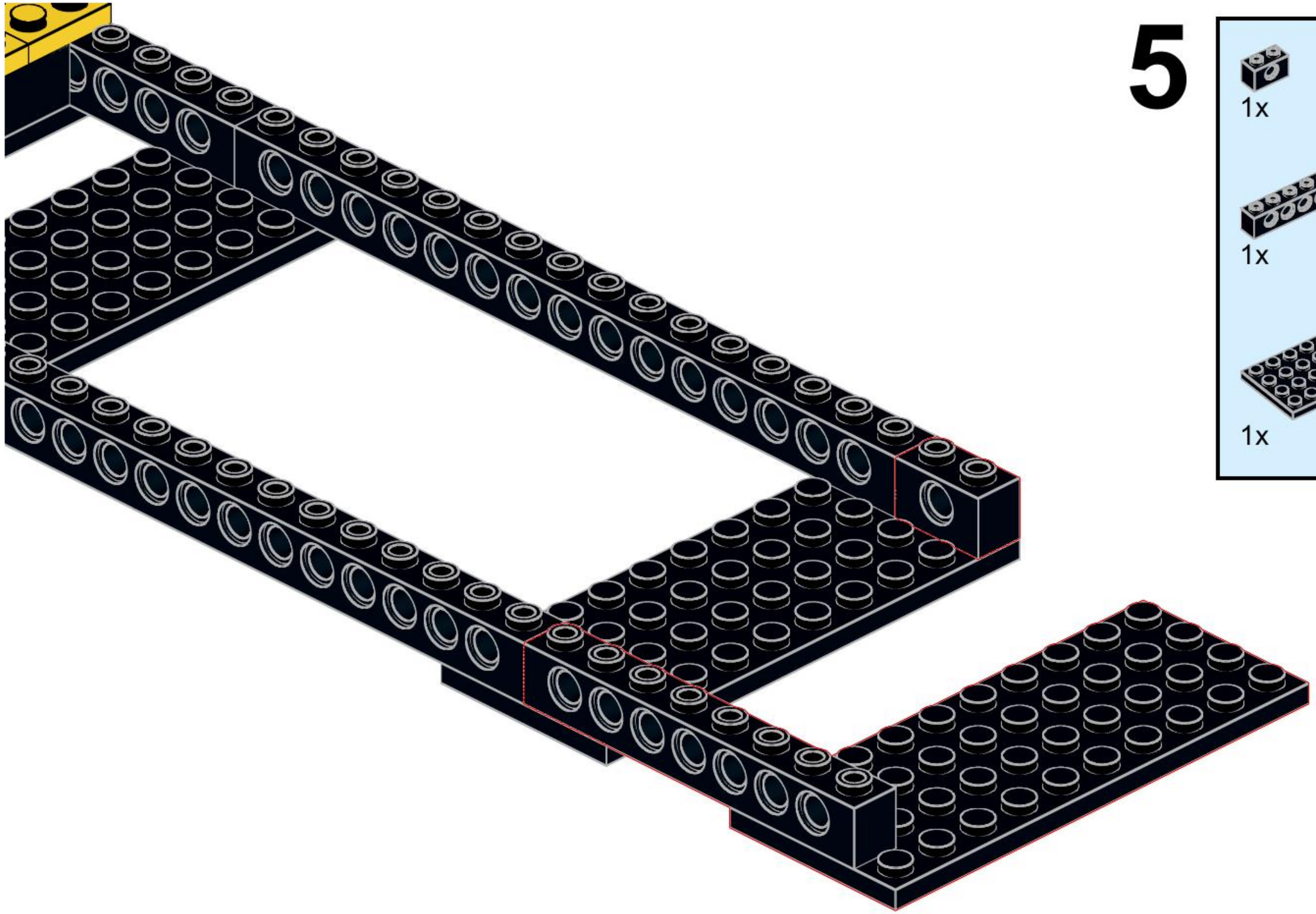

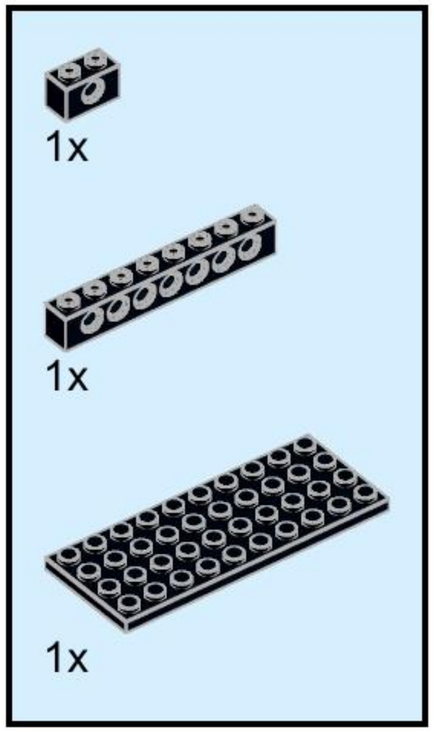

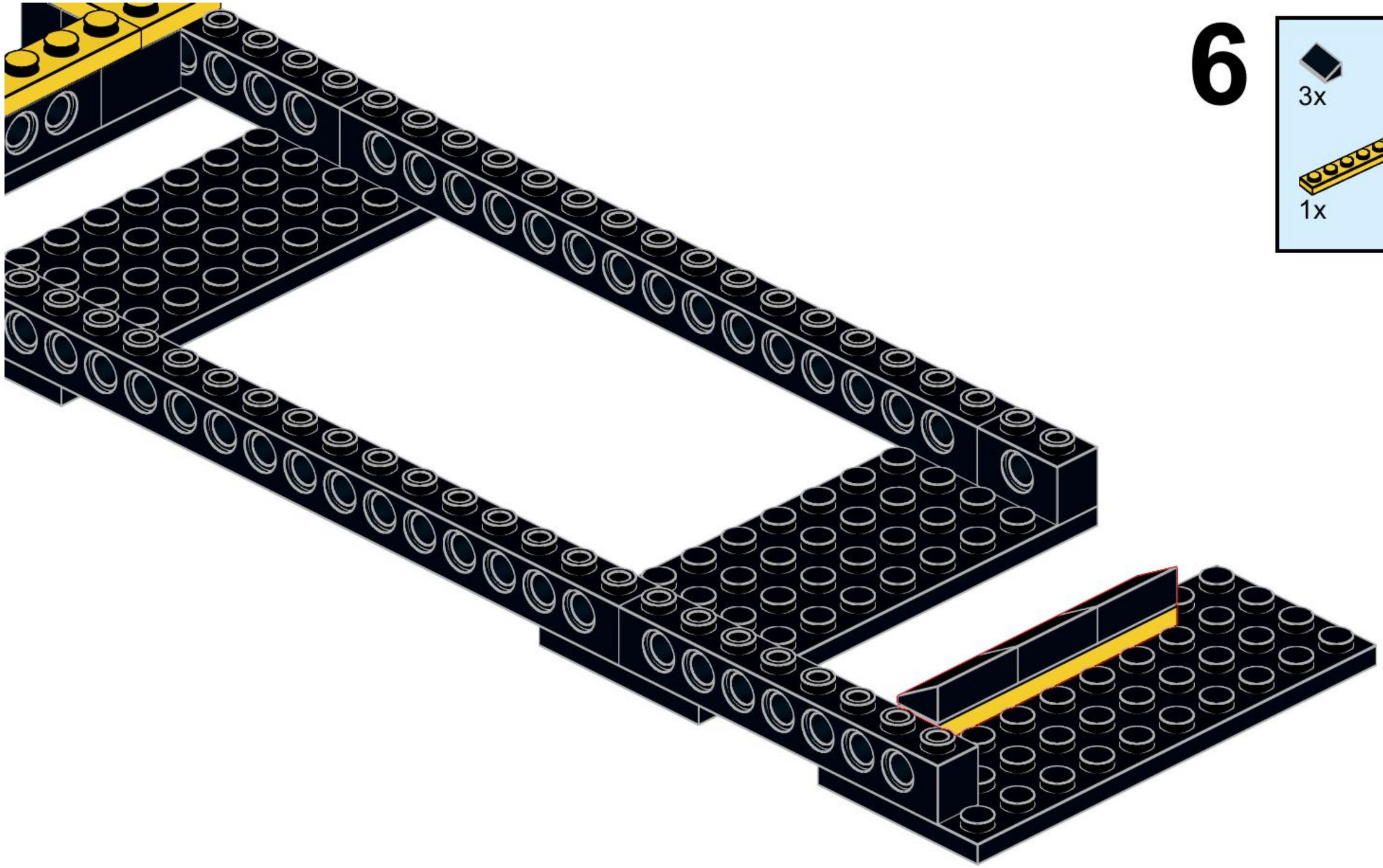

6

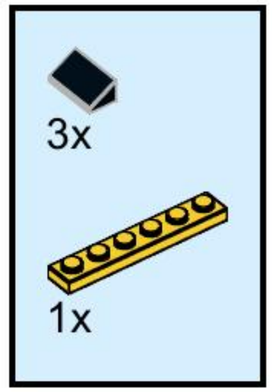

7

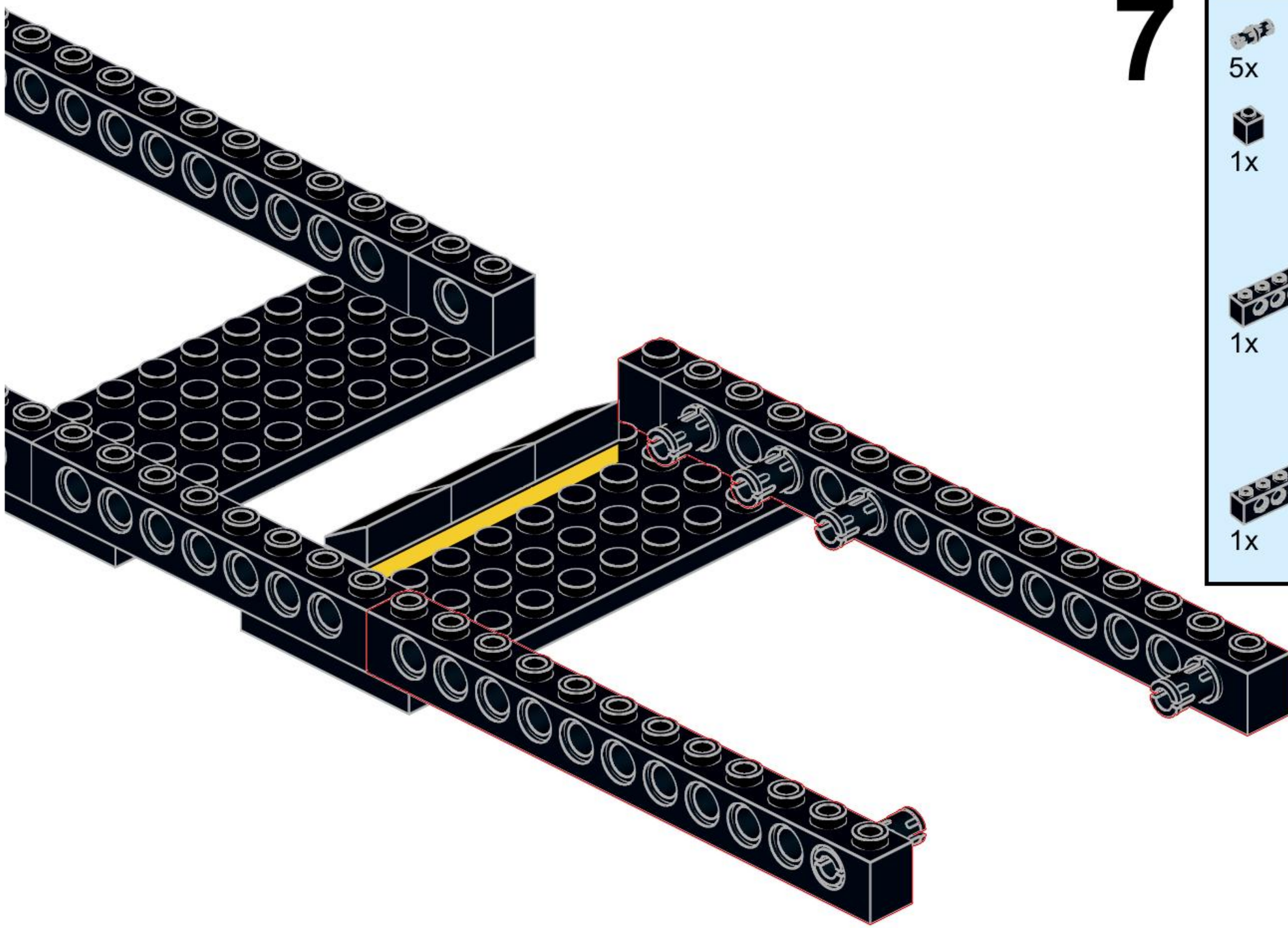

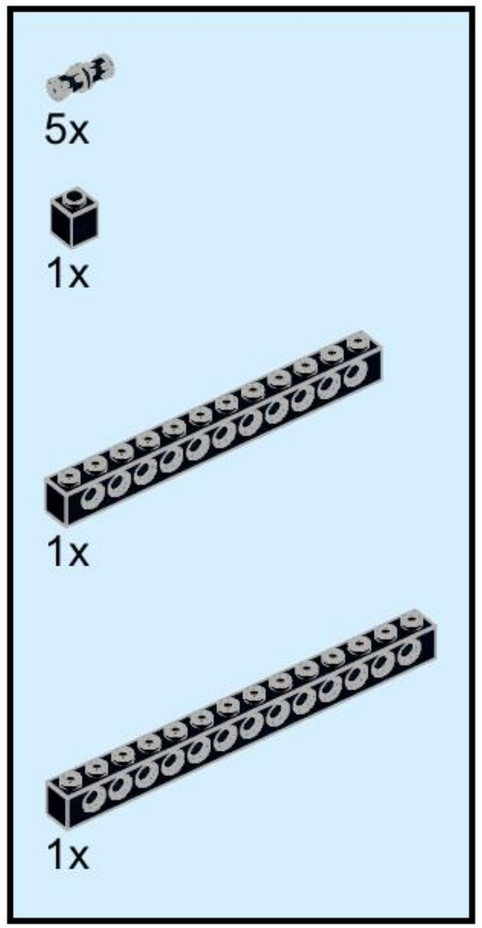

8

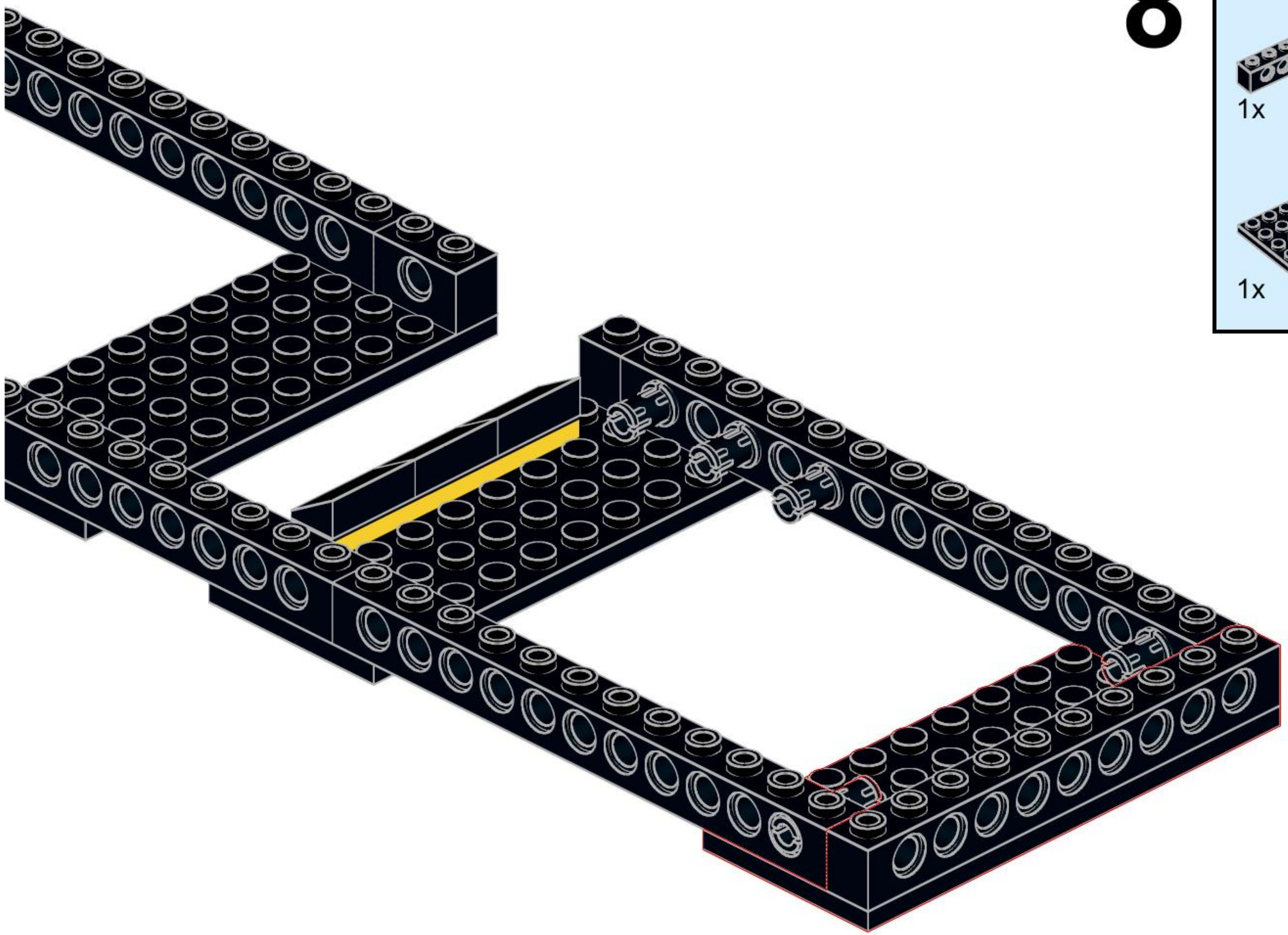

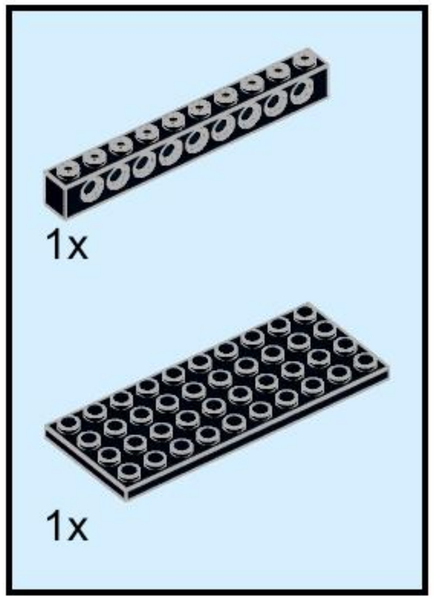

9

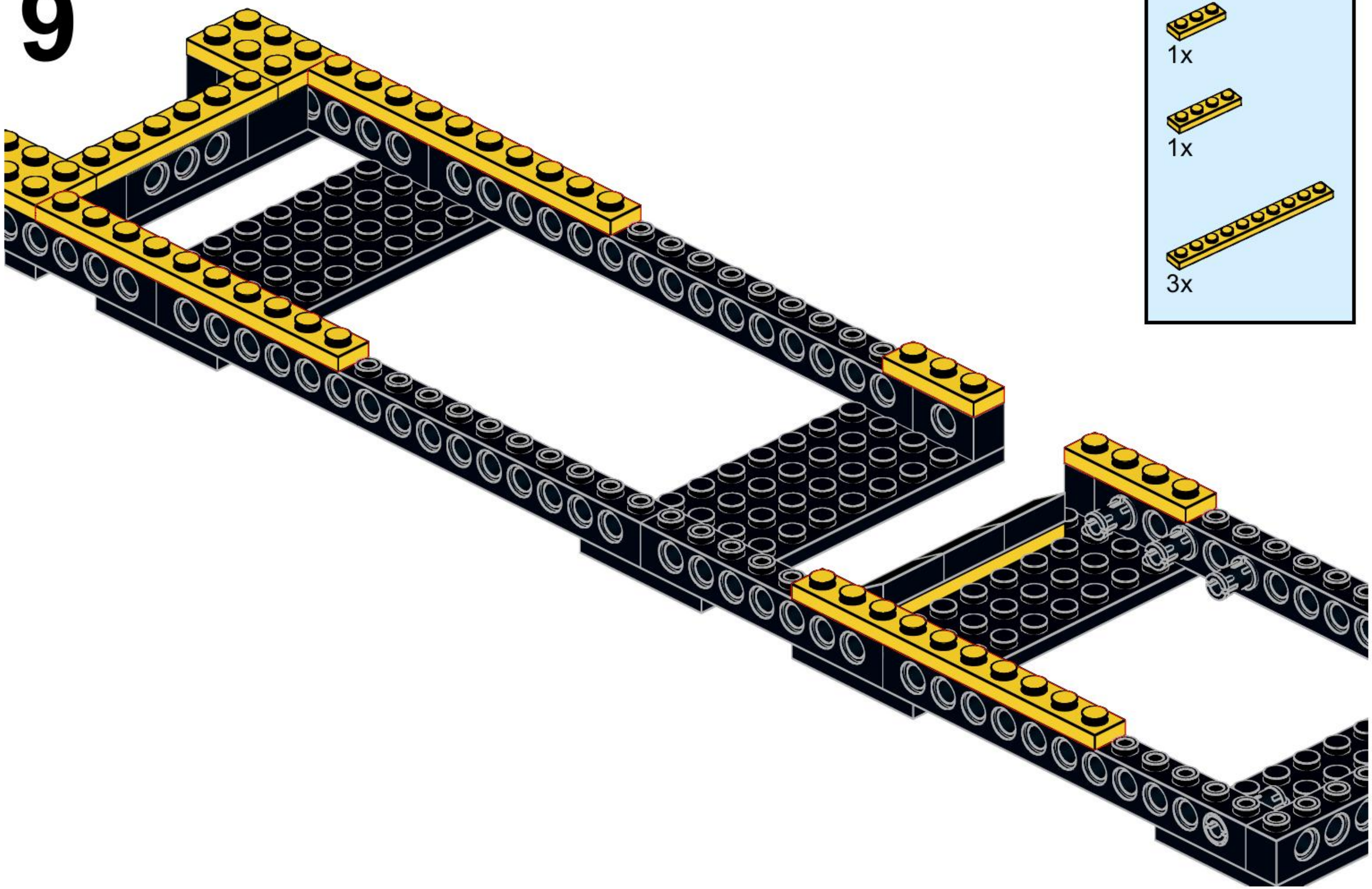

10

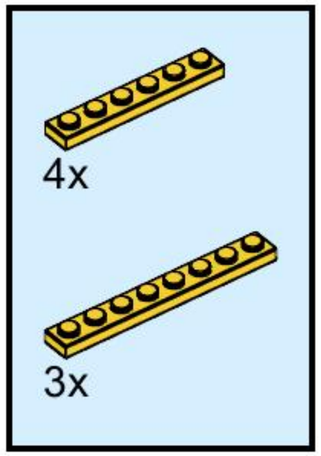

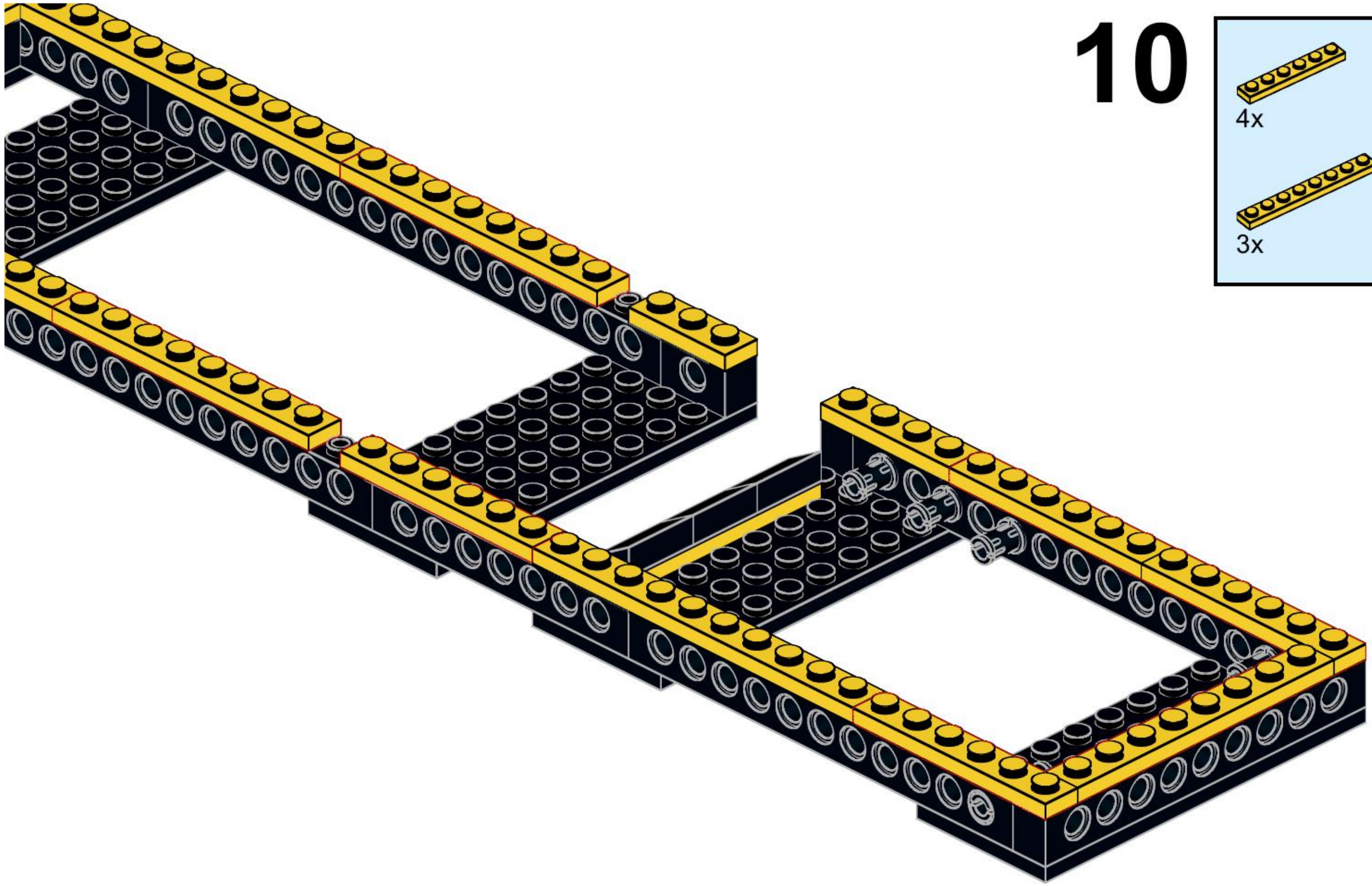

11

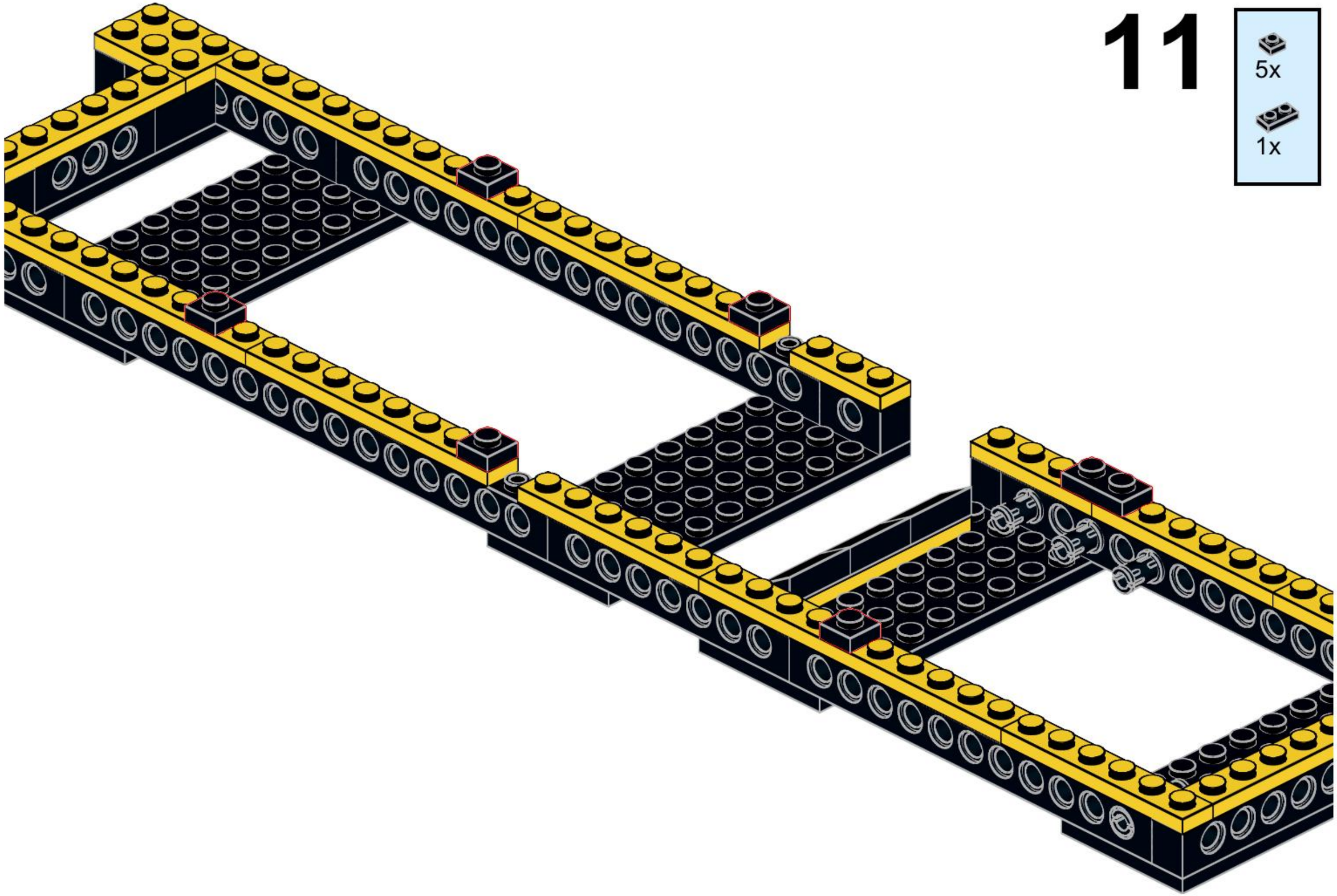

5x

1x

12

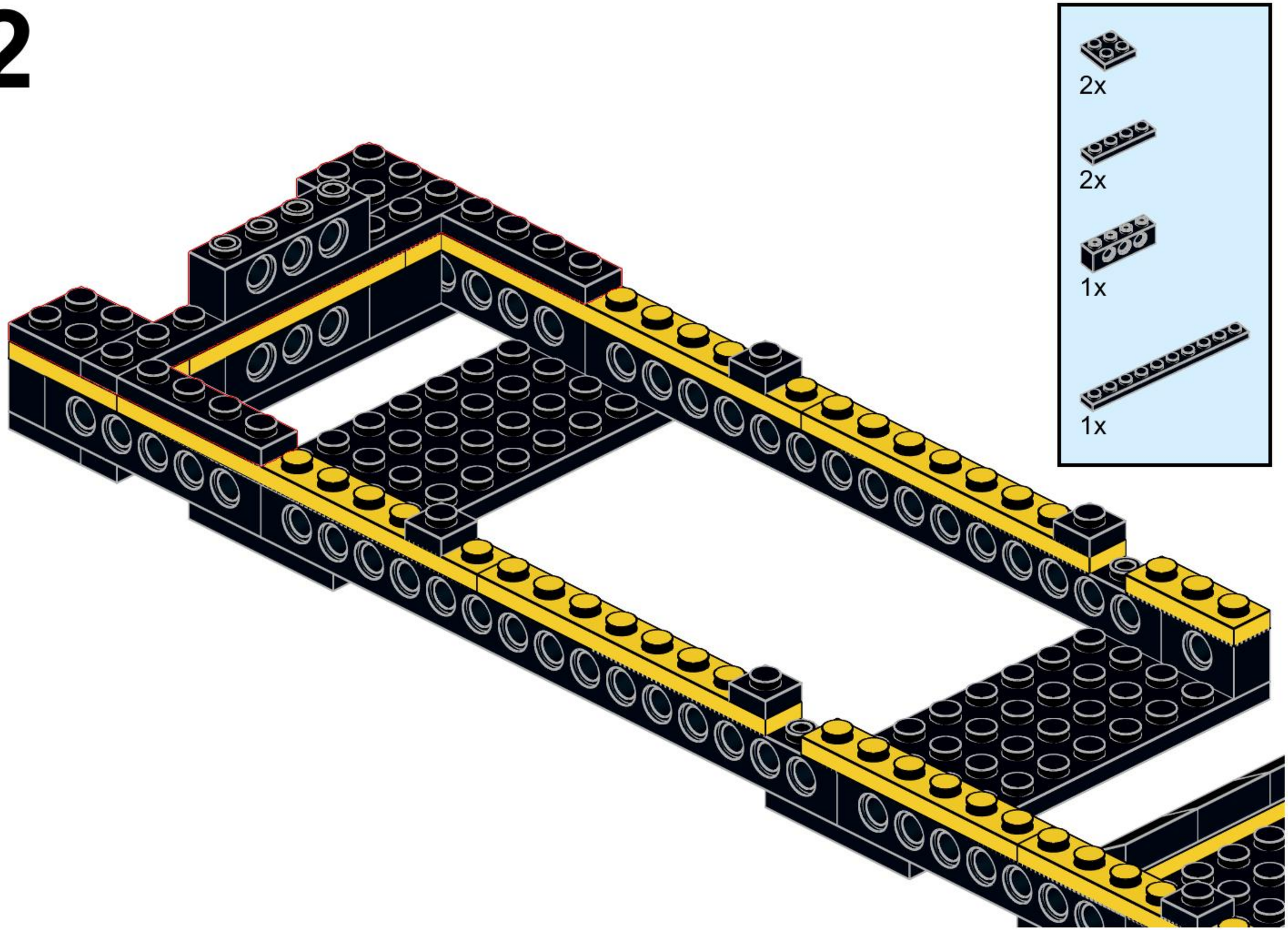

13

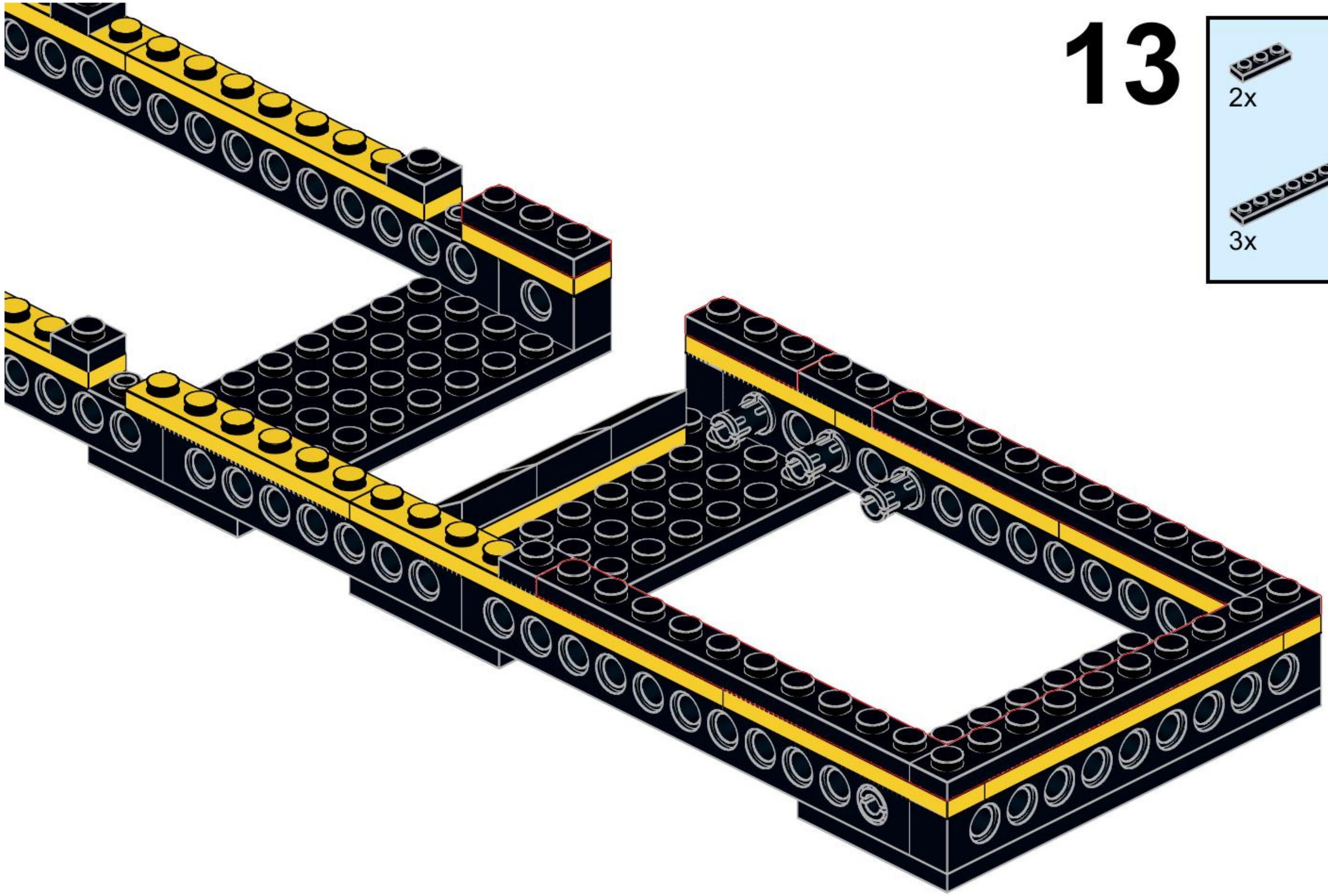

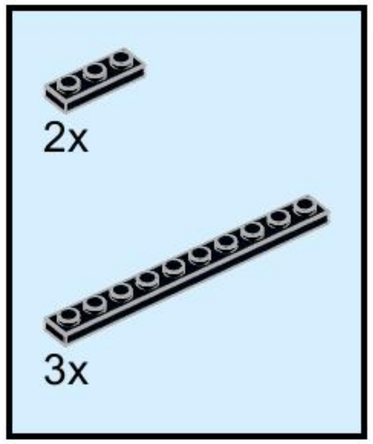

14

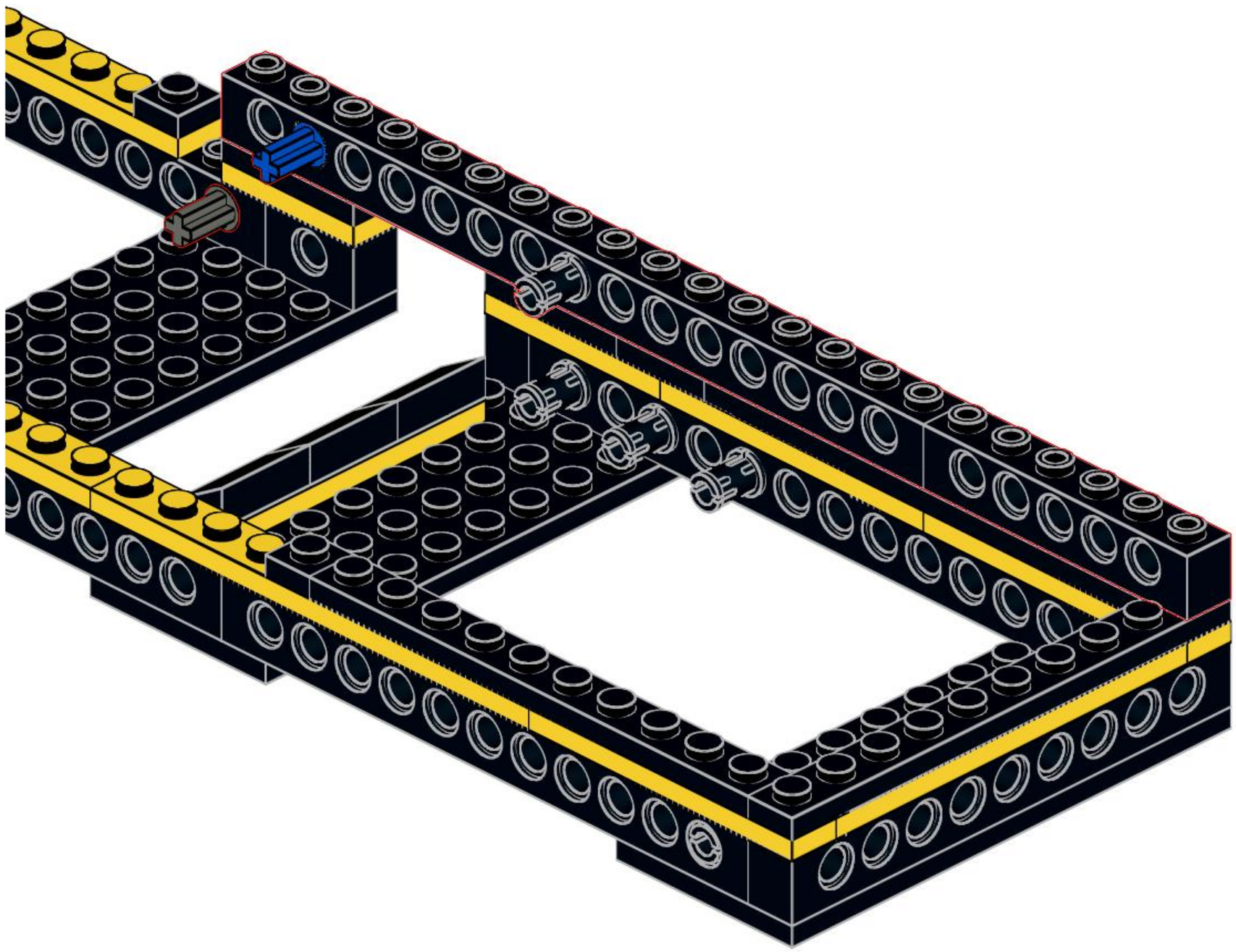

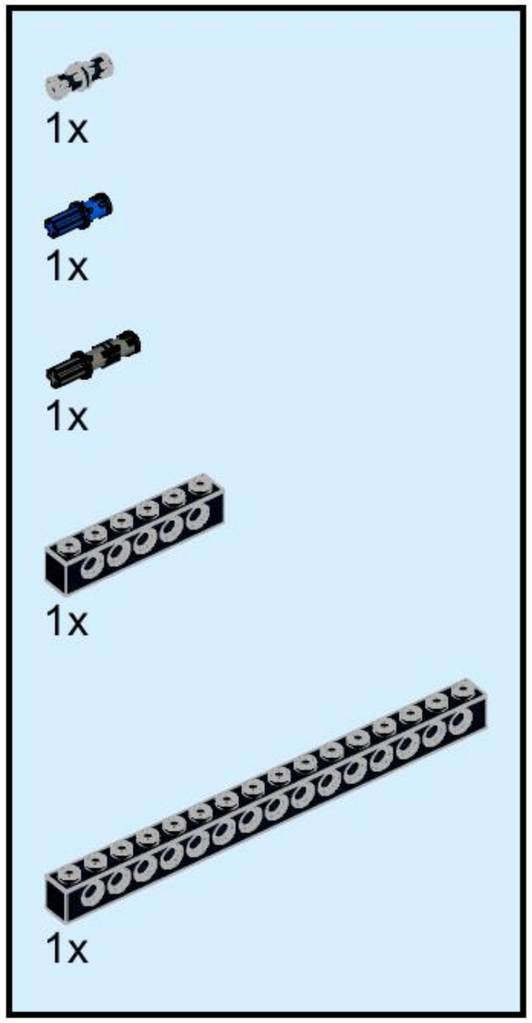

15

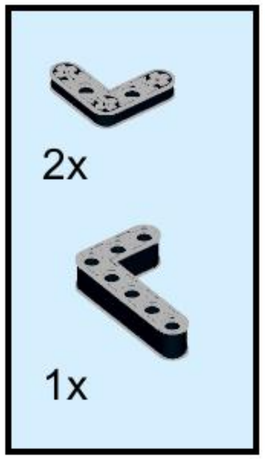

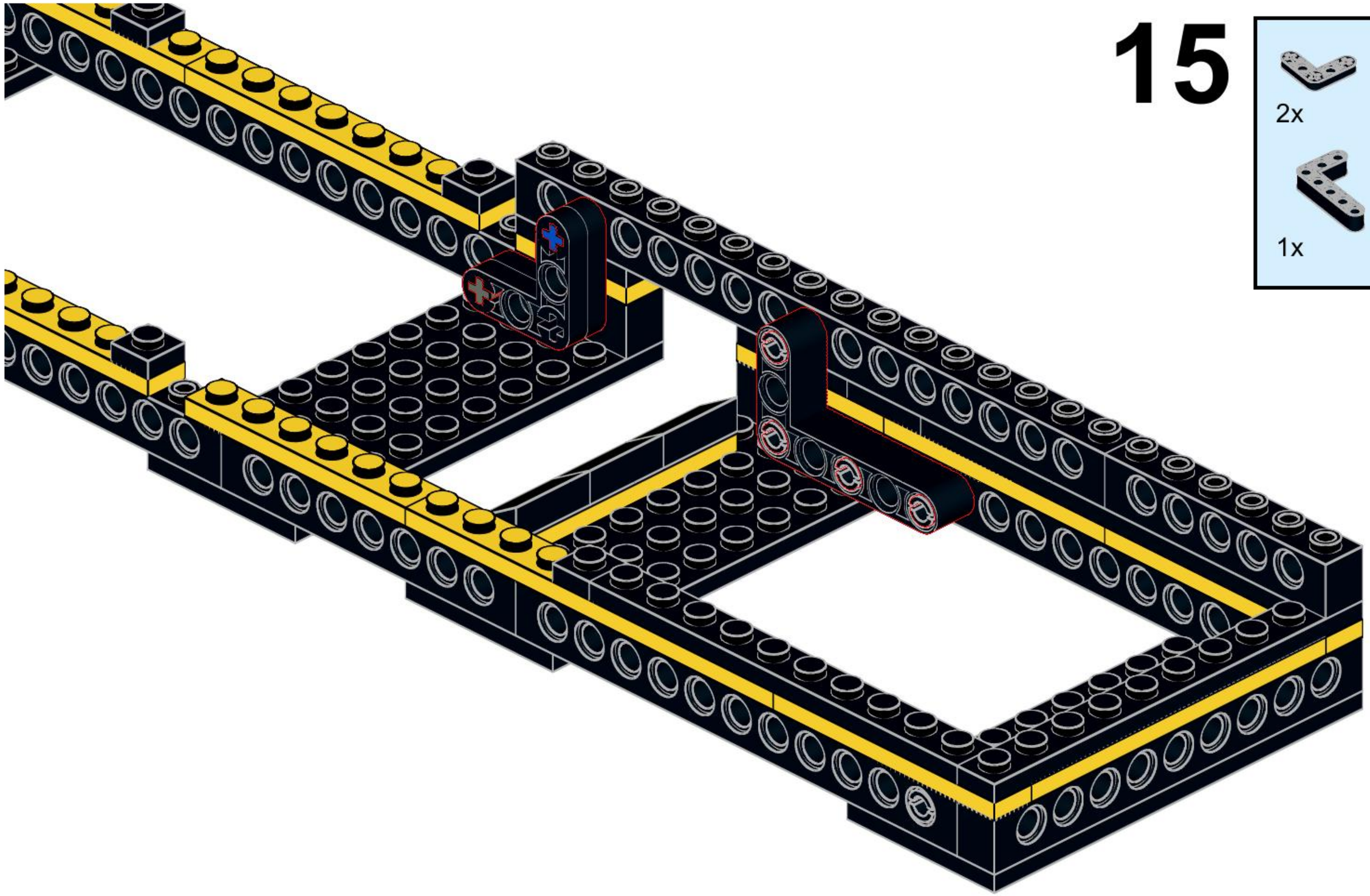

16

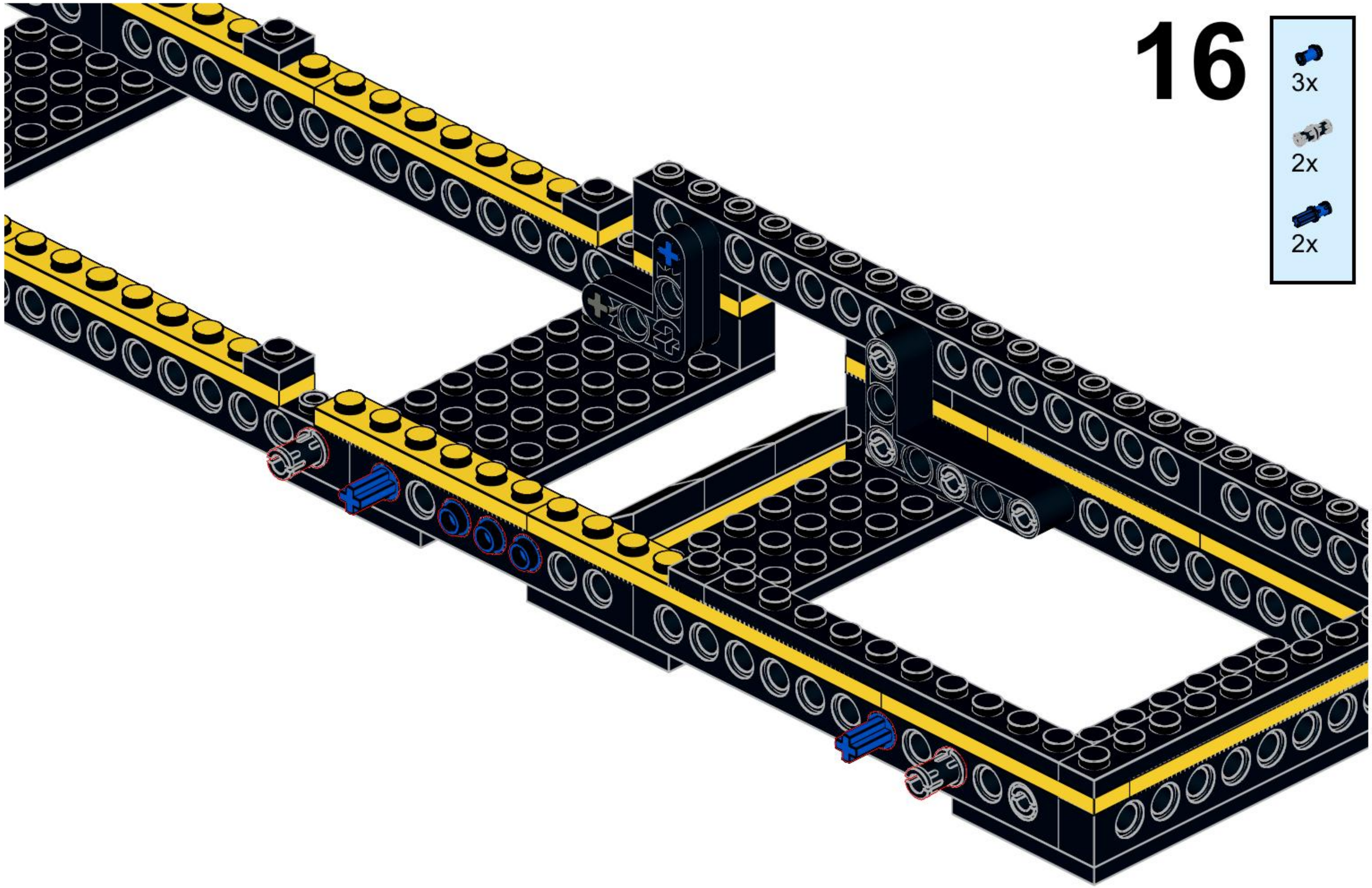

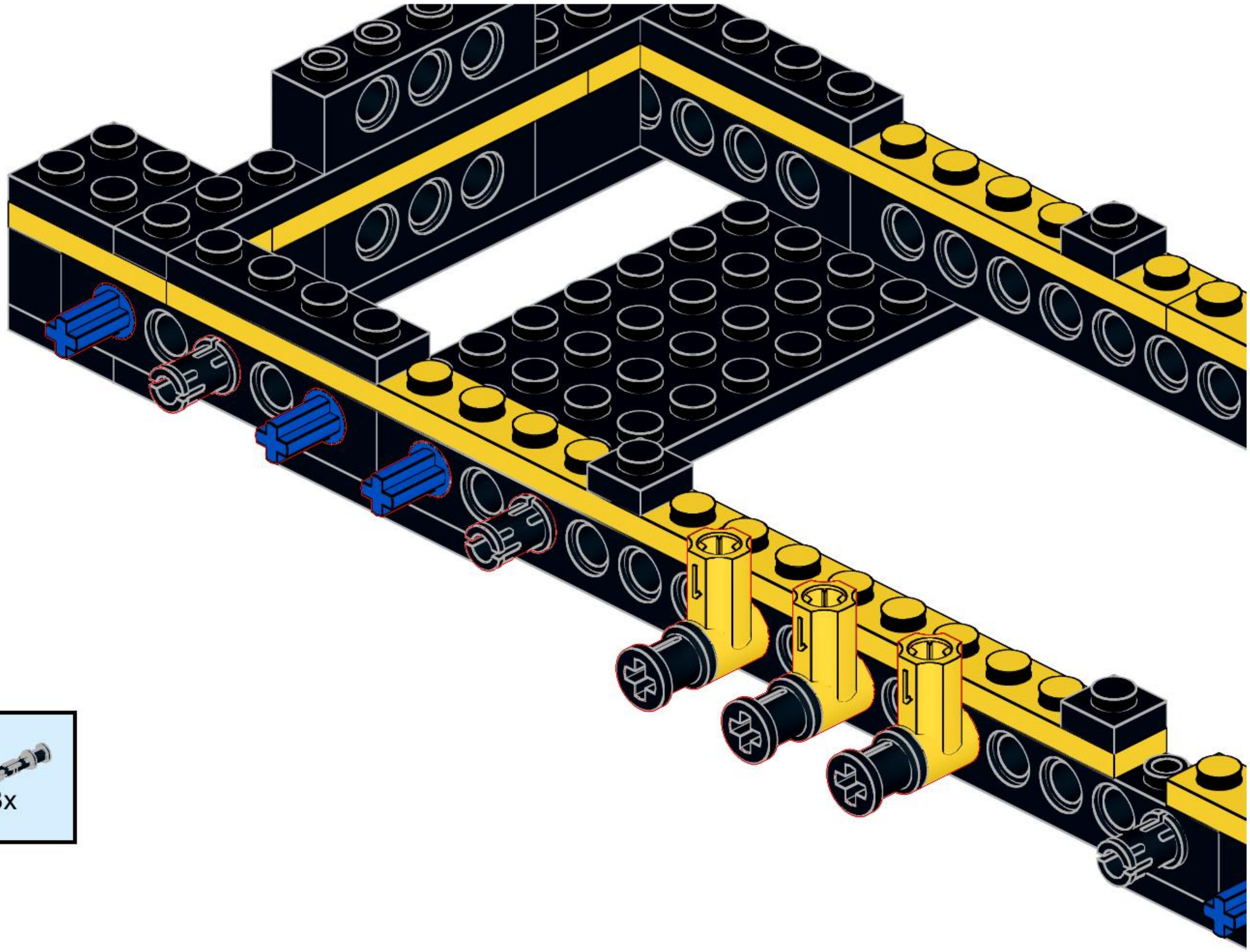

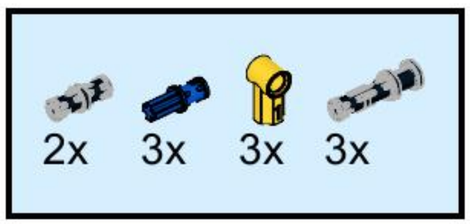

17

18

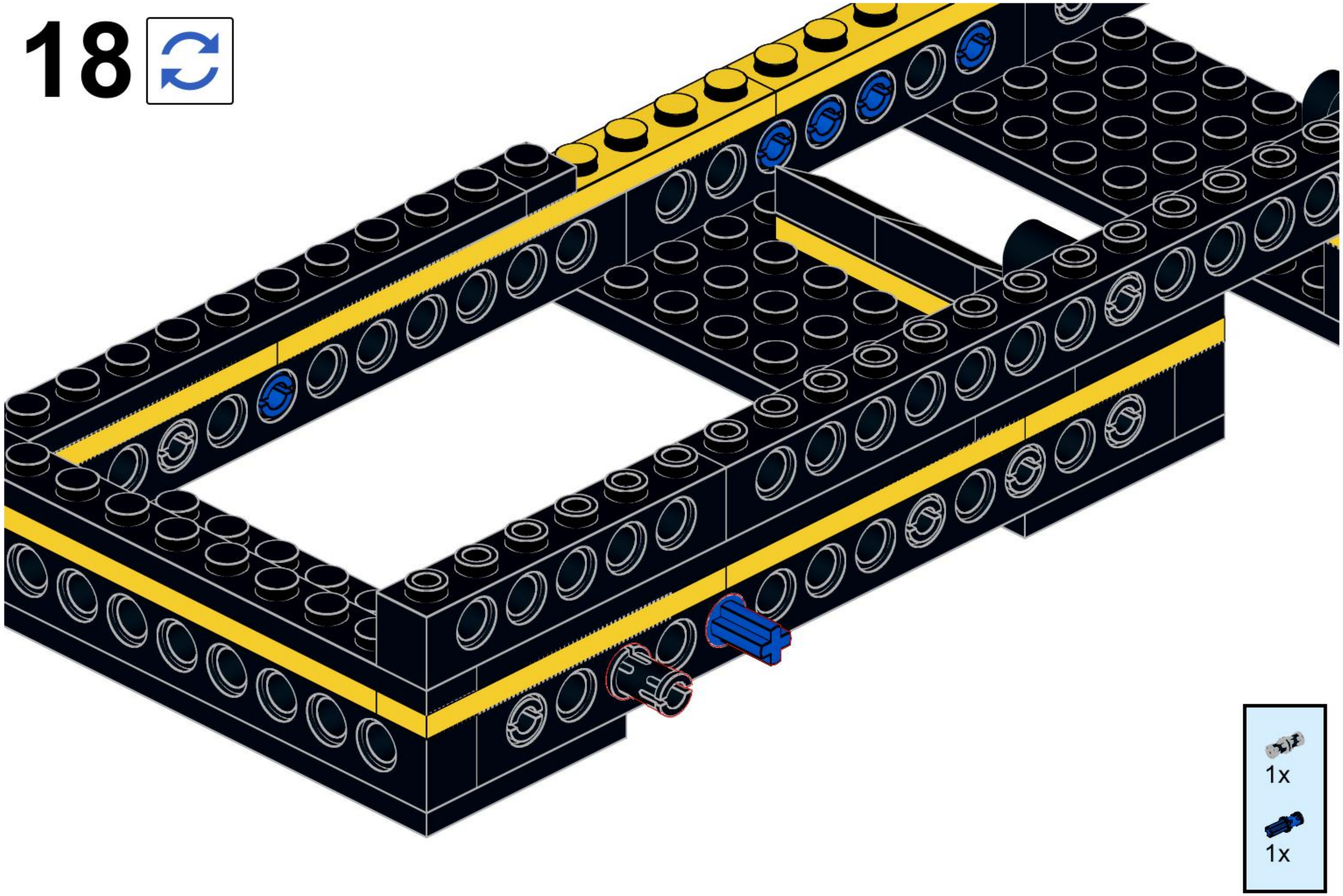

19

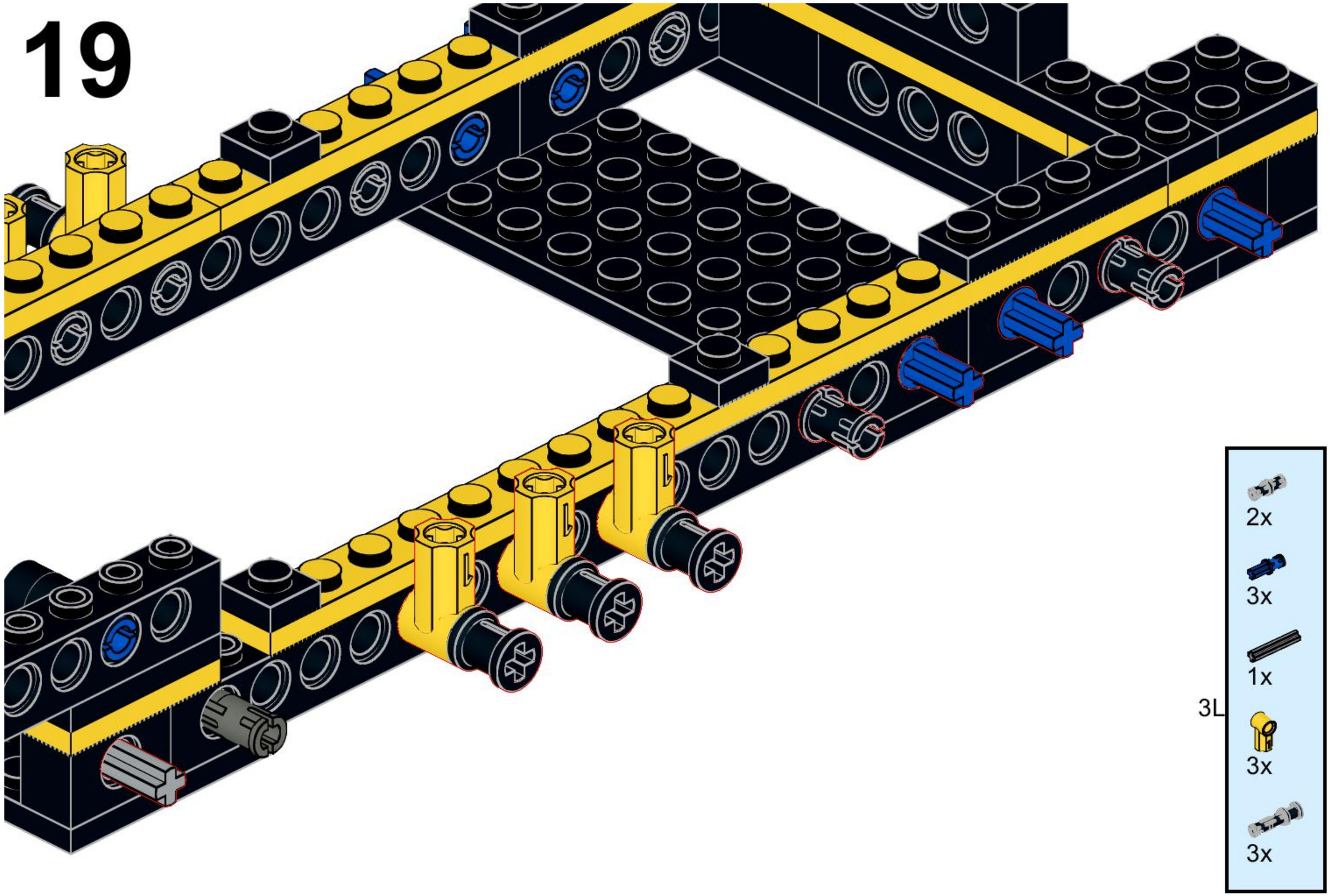

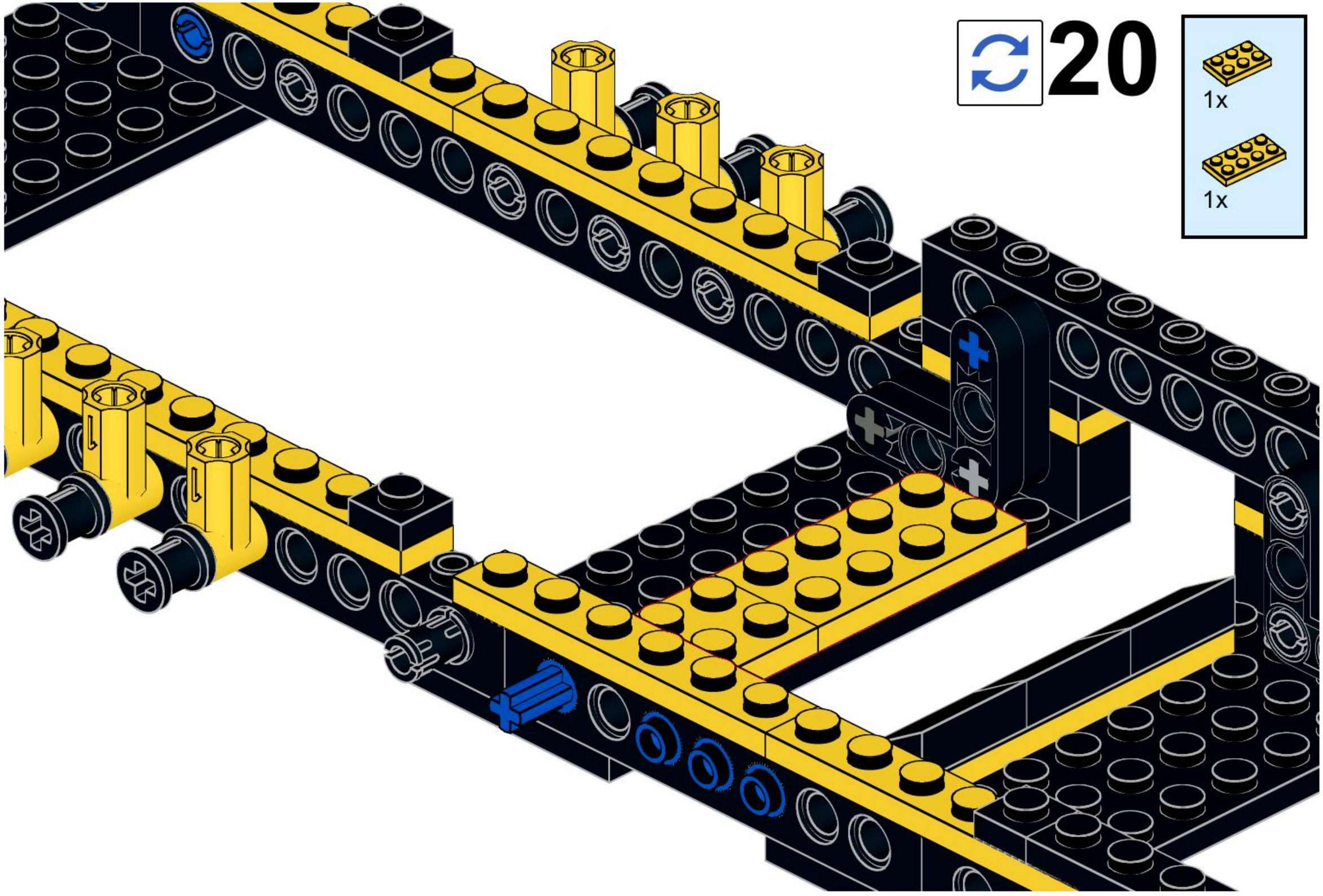
20
1x
1x

21

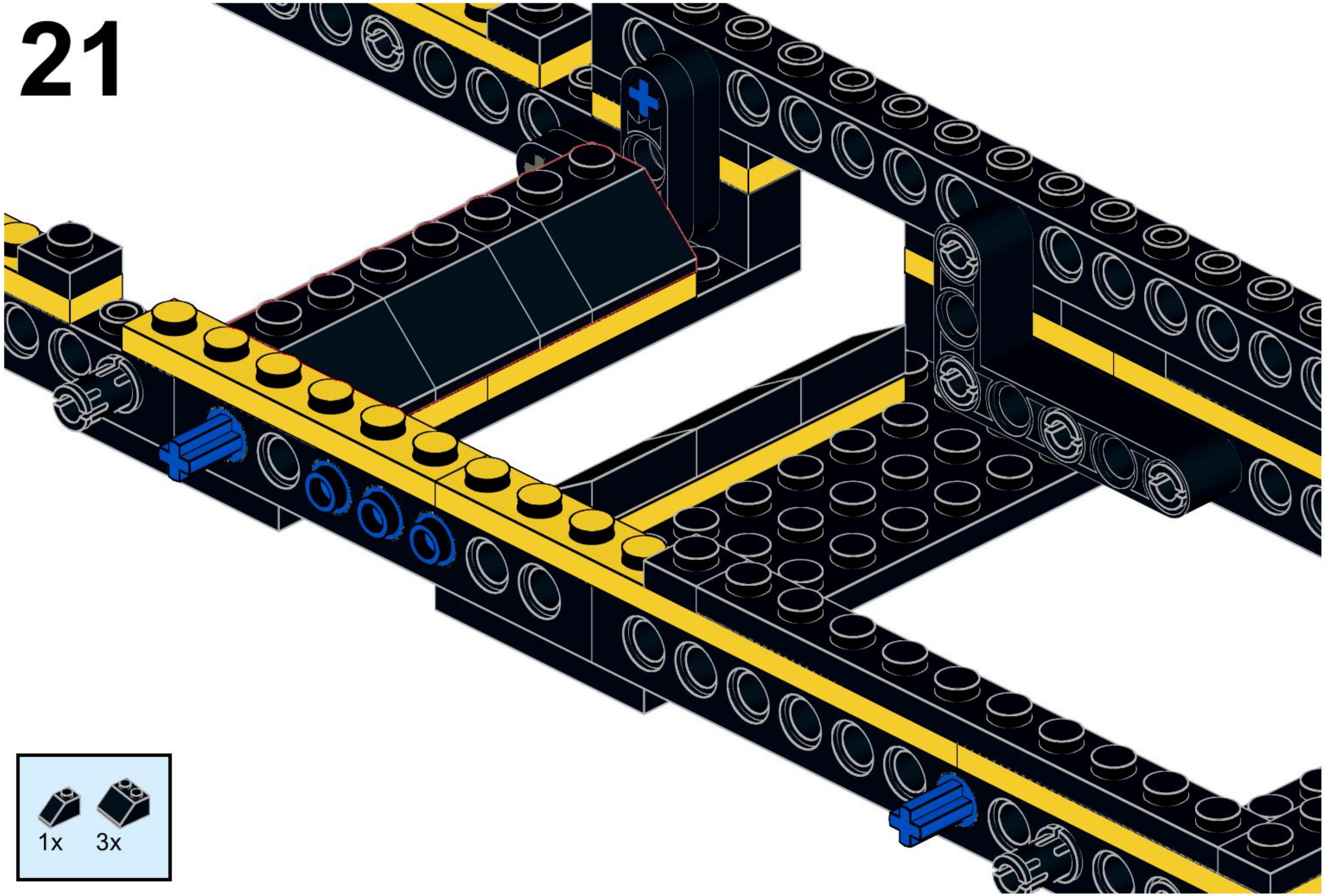

22

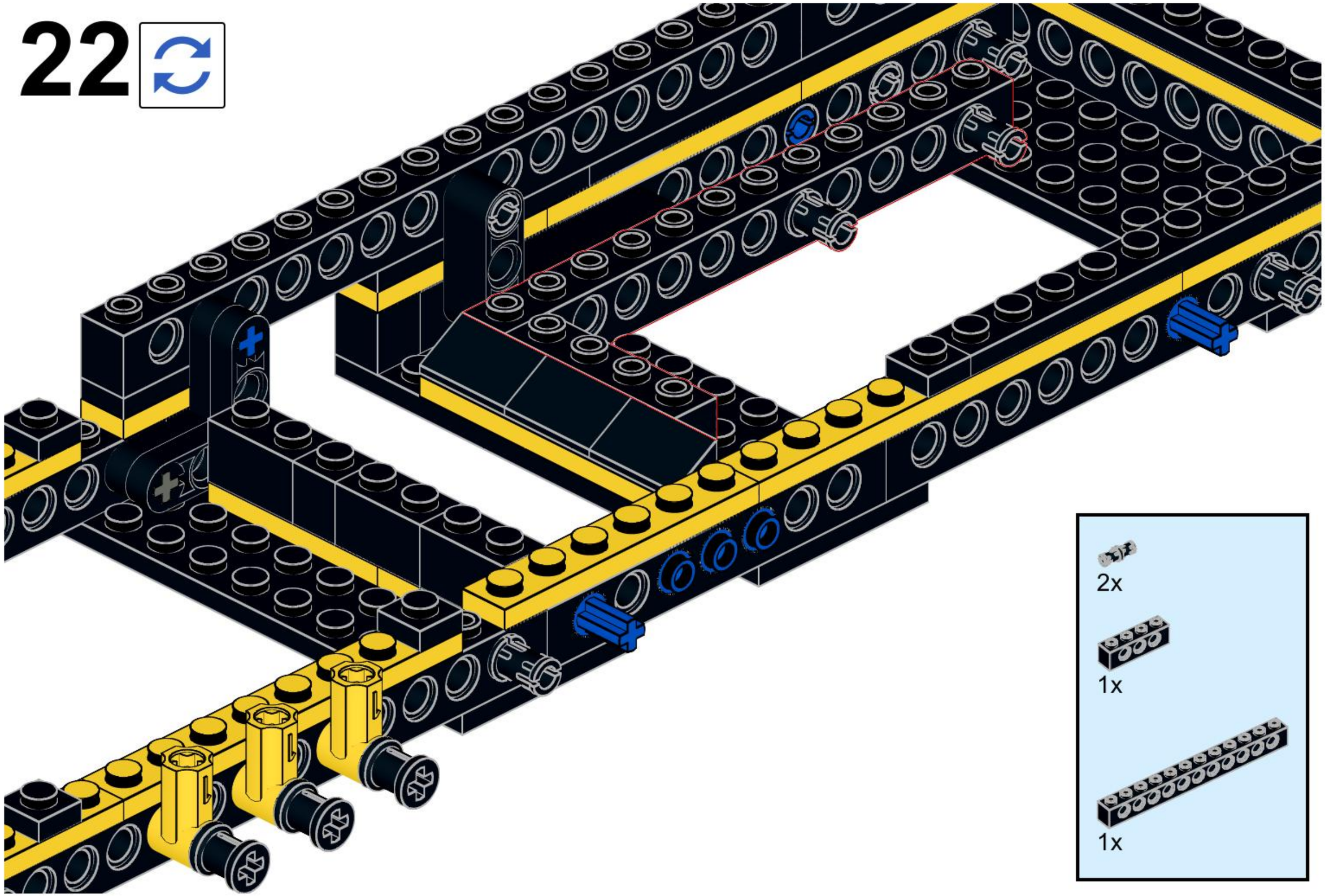

23

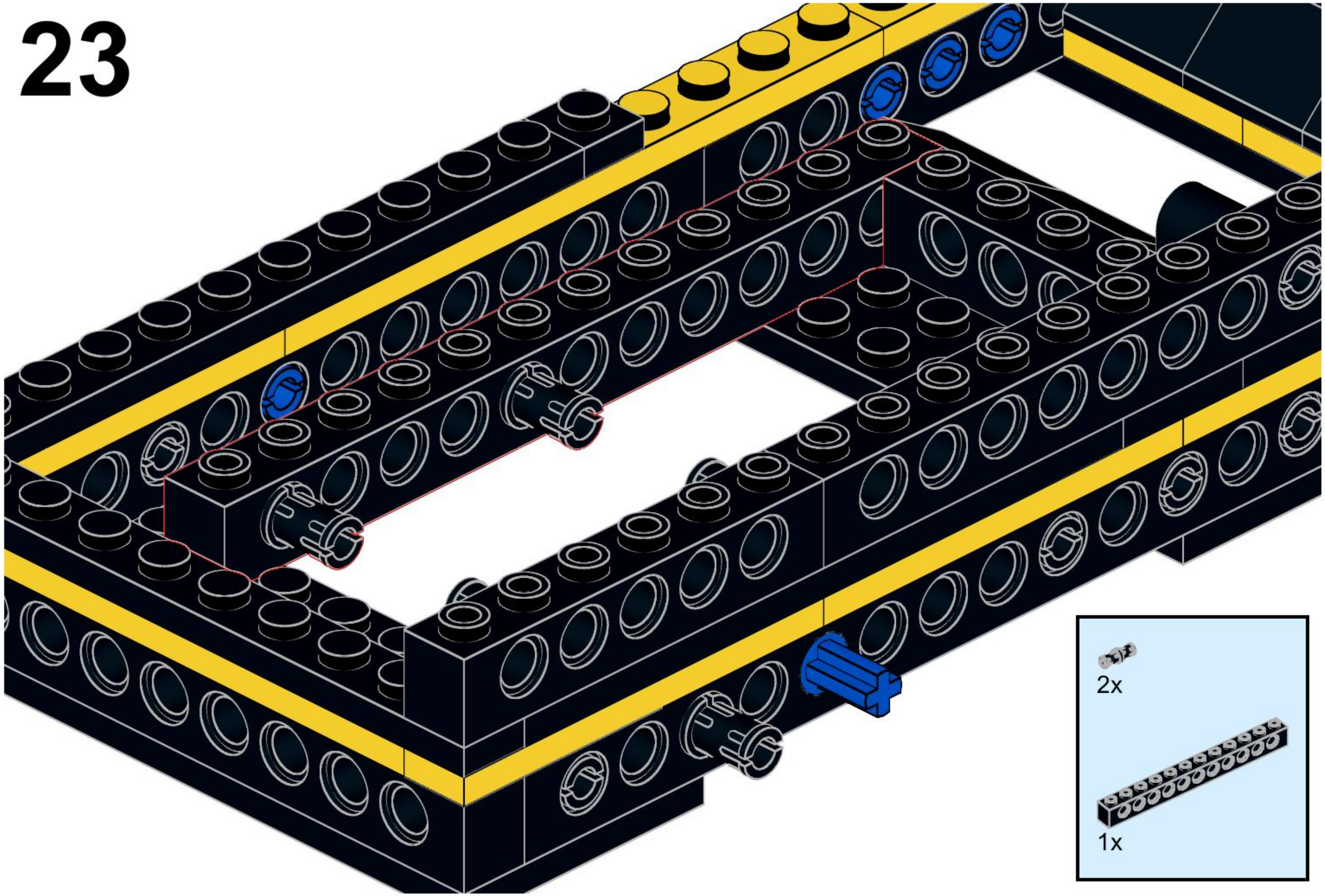

24

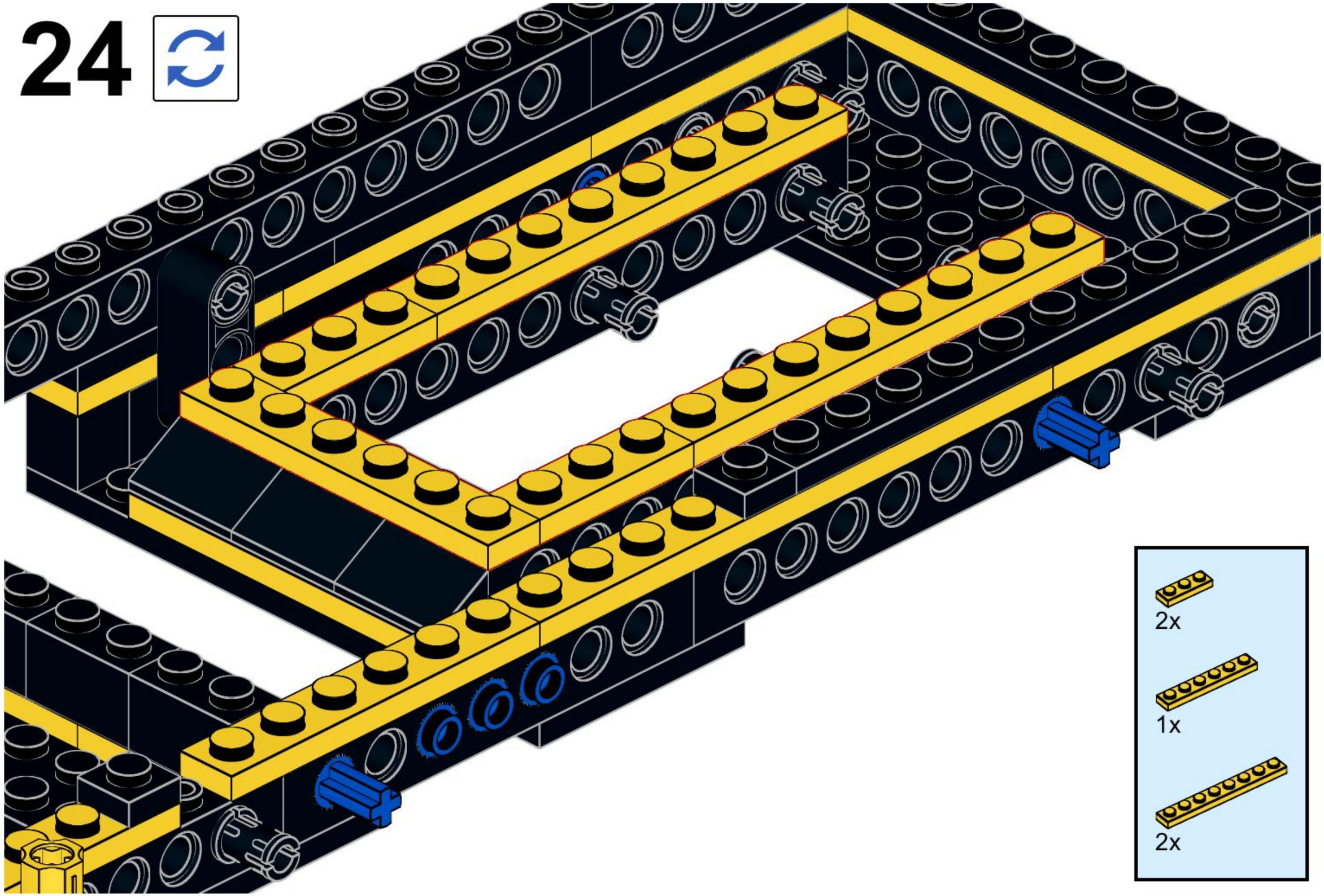

25

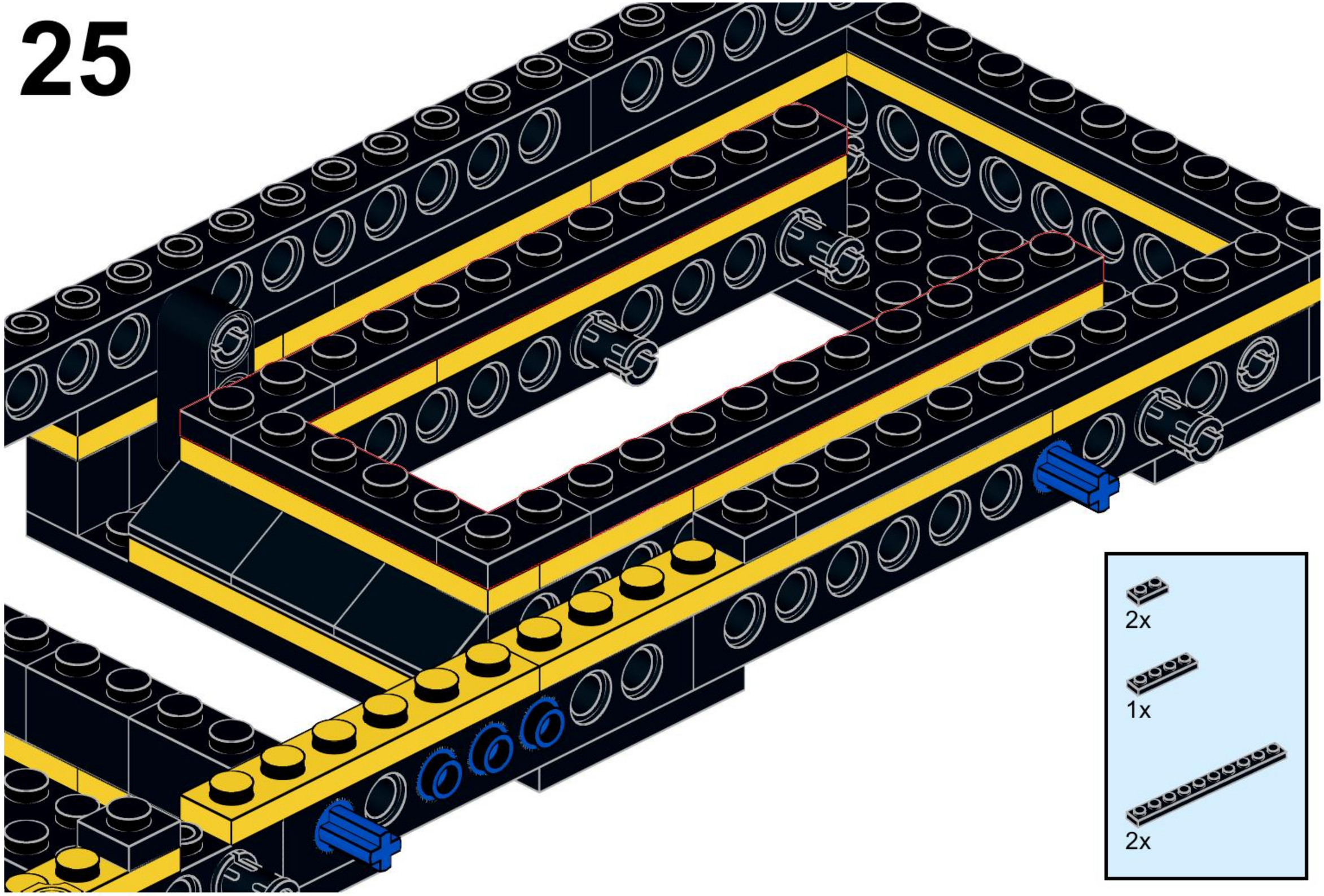

26

This is the completed module base.
Everything will be anchored onto this base.

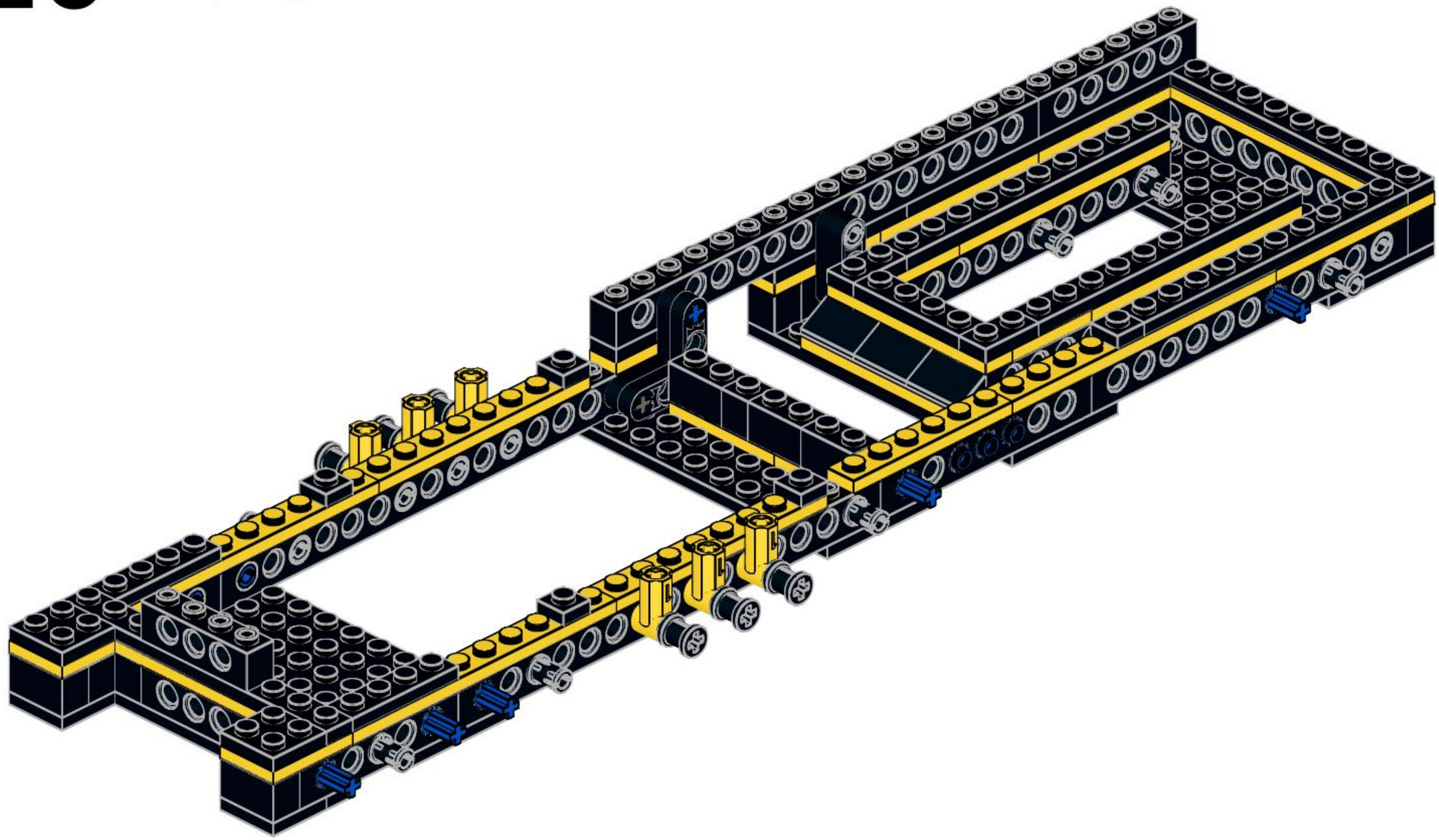

27

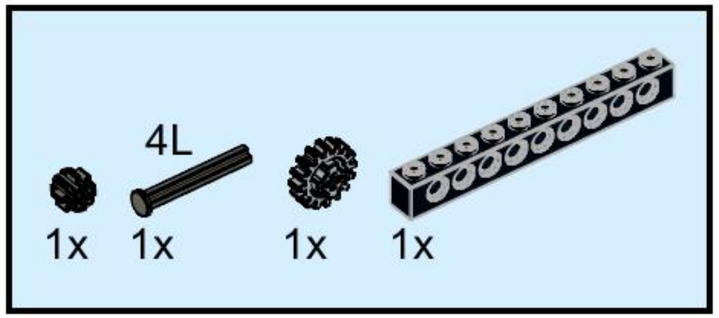

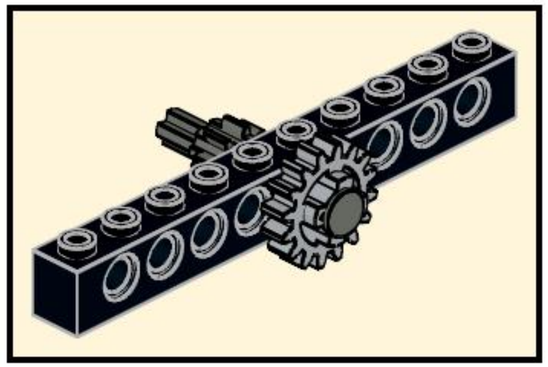

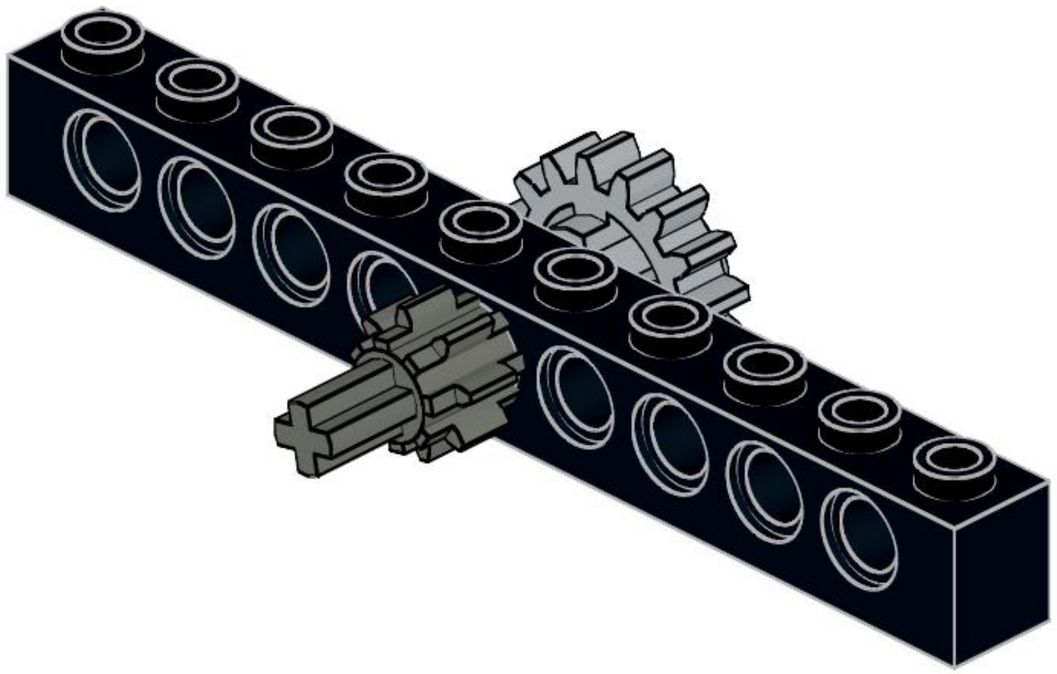

Stepper unit drive mechanism

28

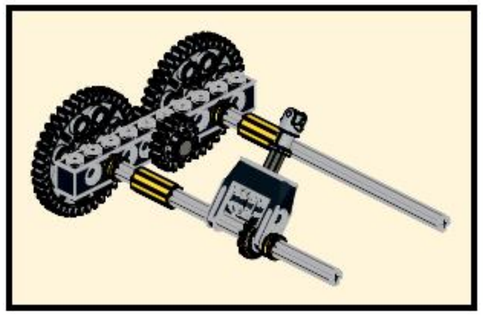

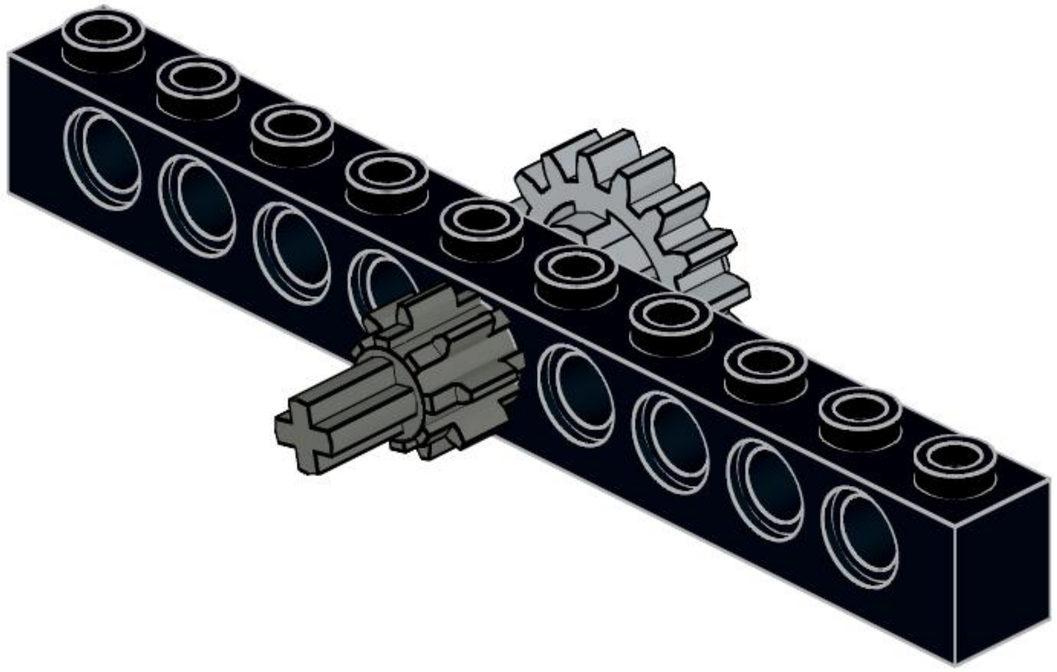

29

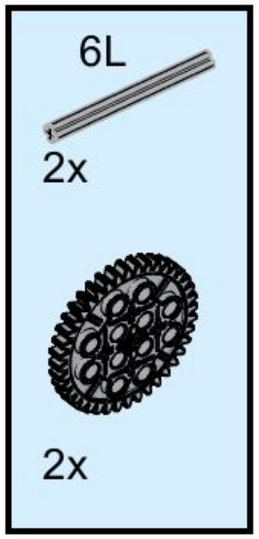

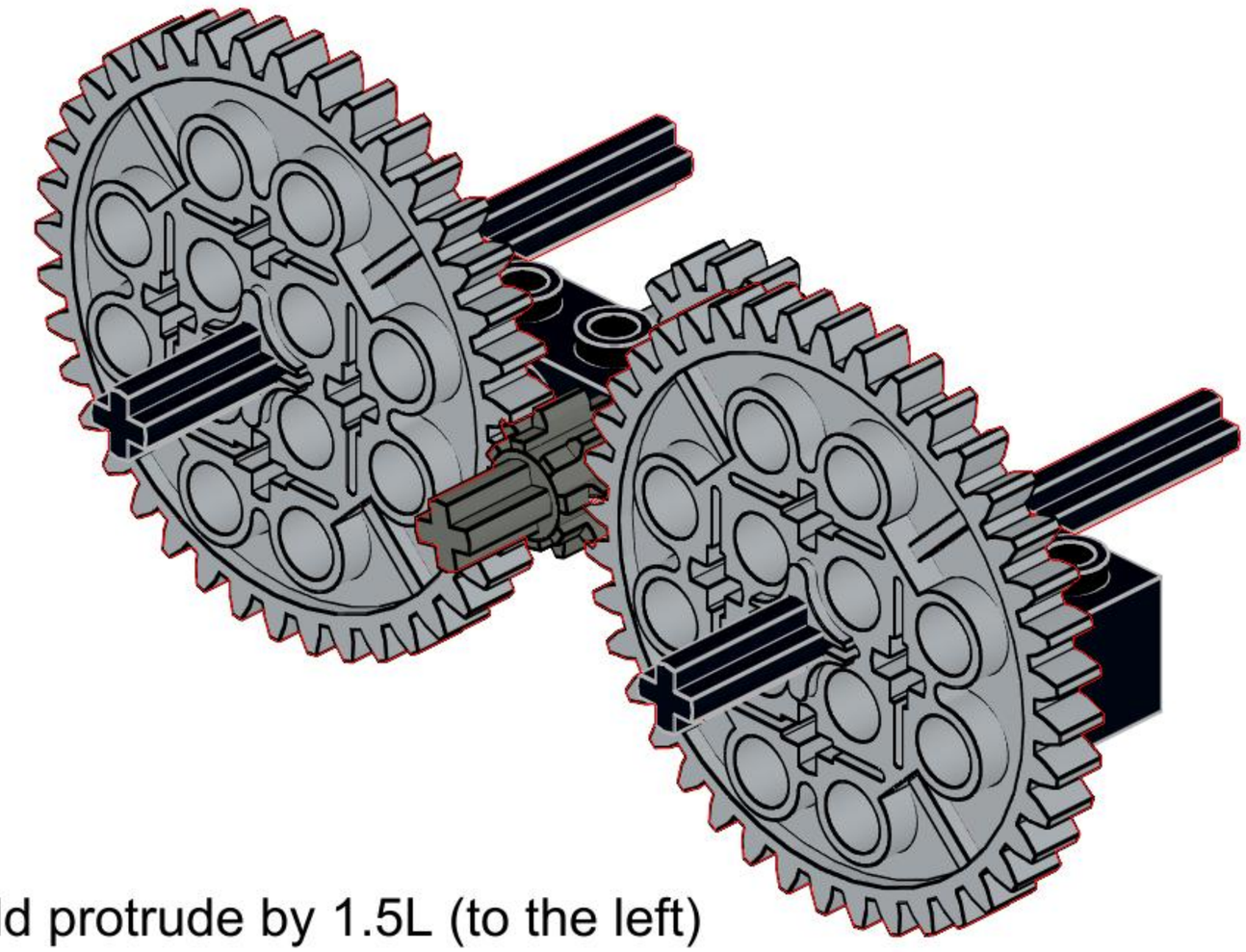

Axles should protrude by 1.5L (to the left)

Note the orientation of the two large gears. They must be oriented exactly the same (as shown) with both axles vertical/horizontal. It will not be possible to syncronize catching the balls in the buckets if they are not aligned correctly.

30

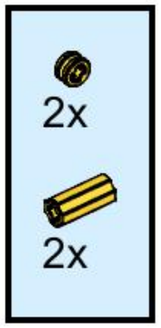

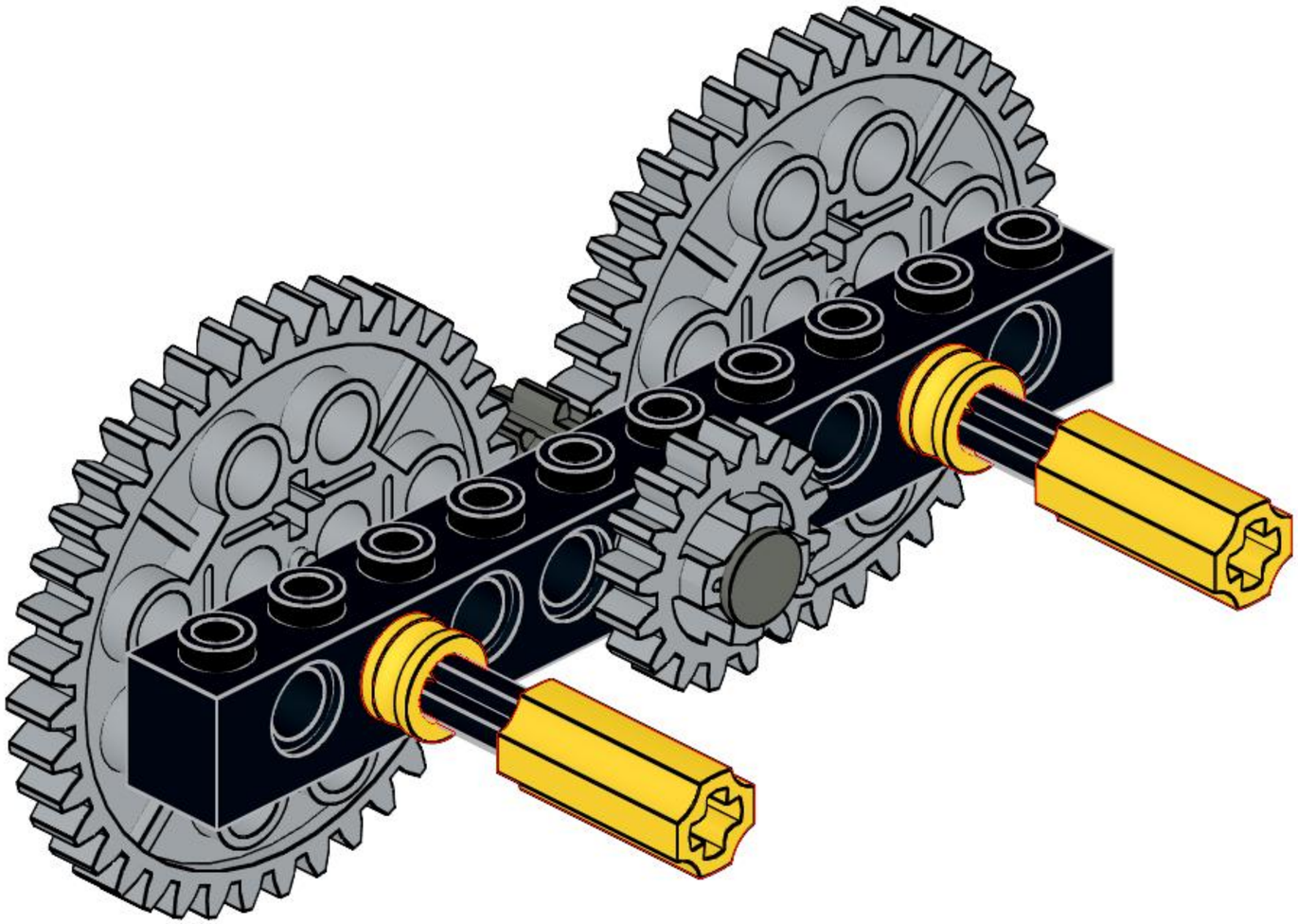

31

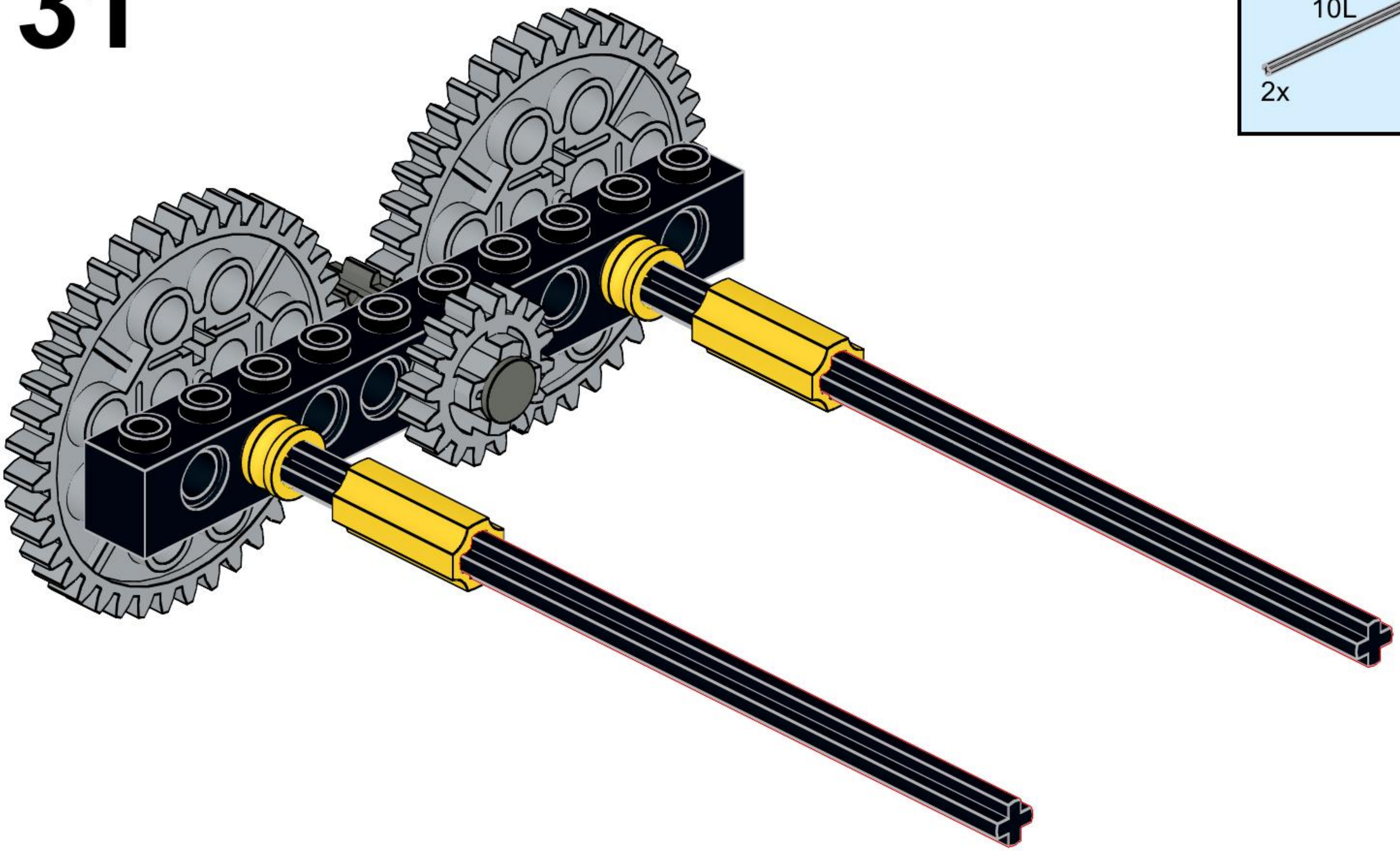

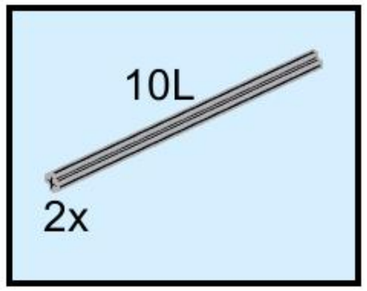

32

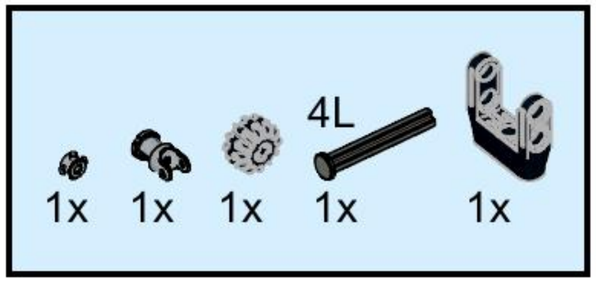

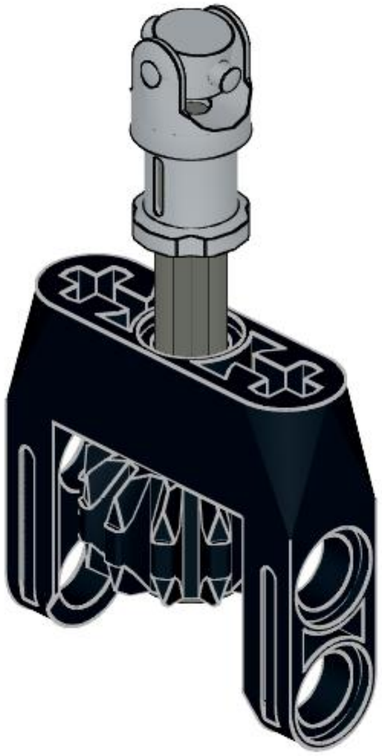

Attach a complete universal joint. Later in the instructions the attachment location will be shown.

33

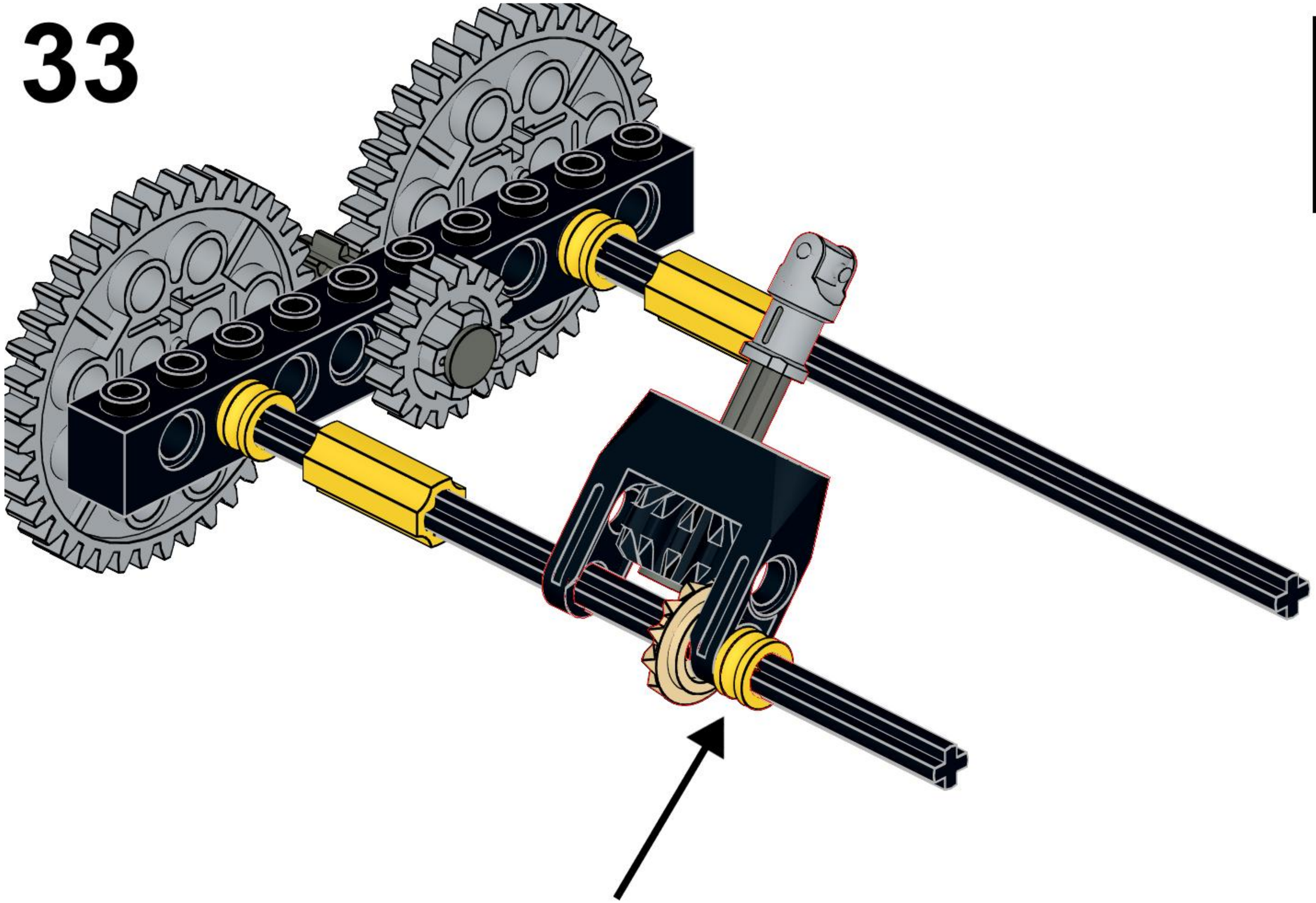

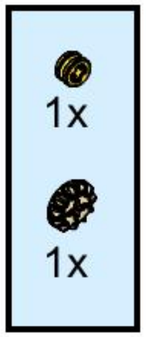

The yellow 1/2 bush is approximately 3.75L from the right end of the axle. It should later be positioned to be as closely aligned with the agitator axle as possible.

34

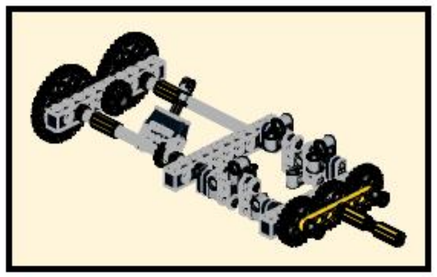

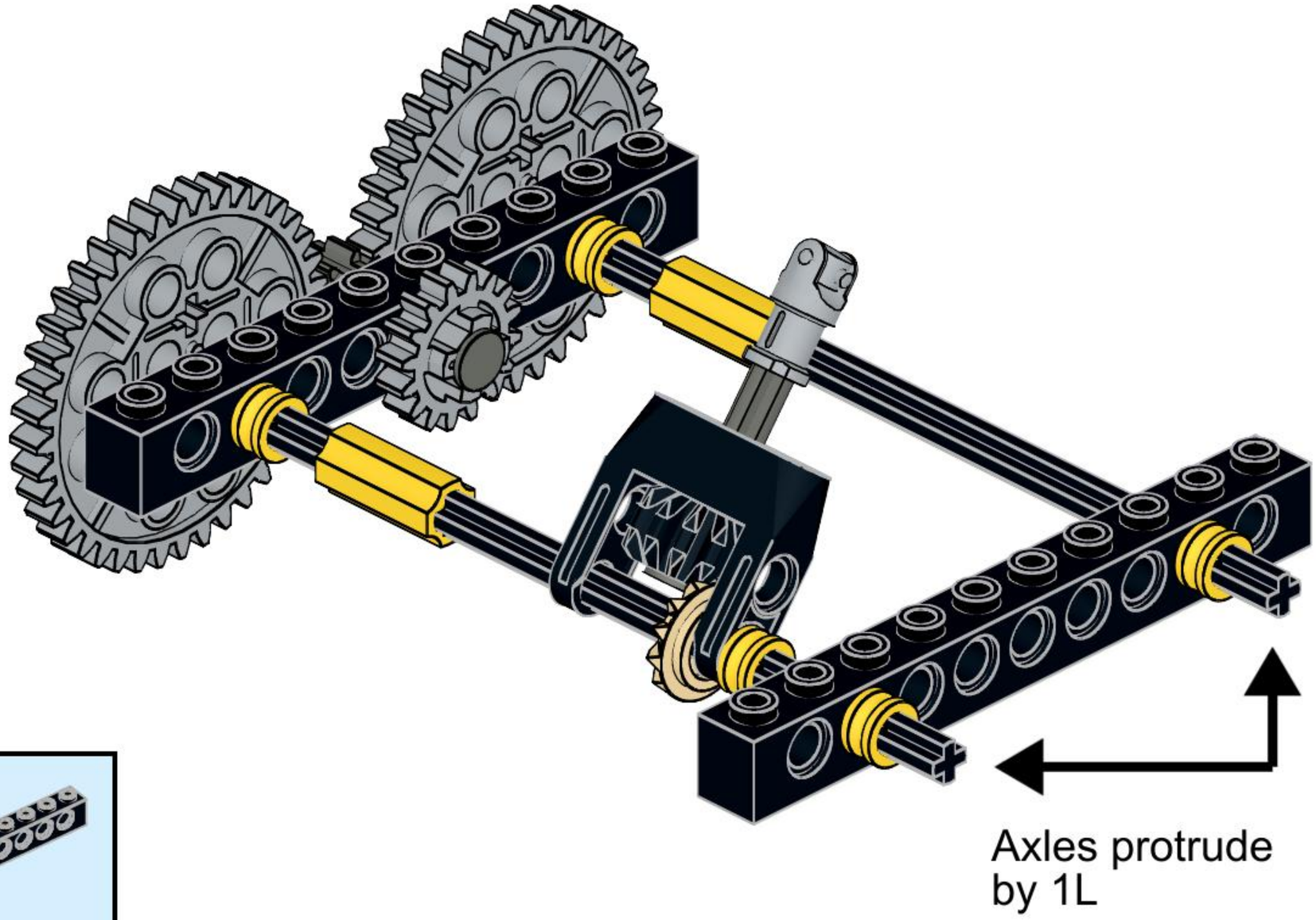

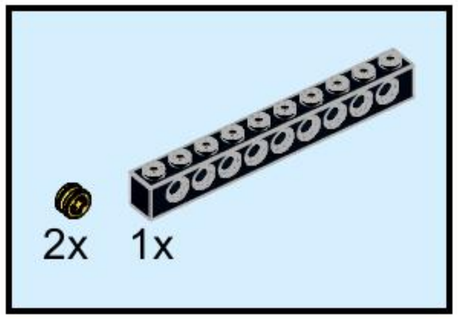

35

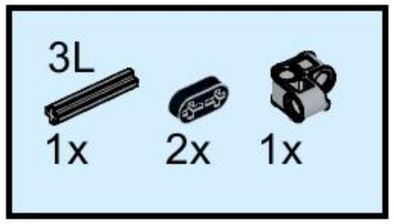

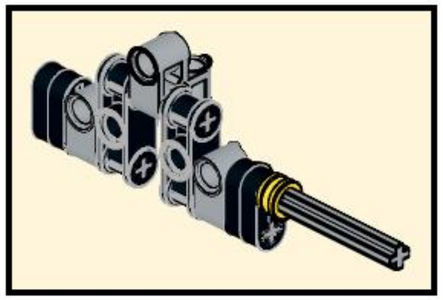

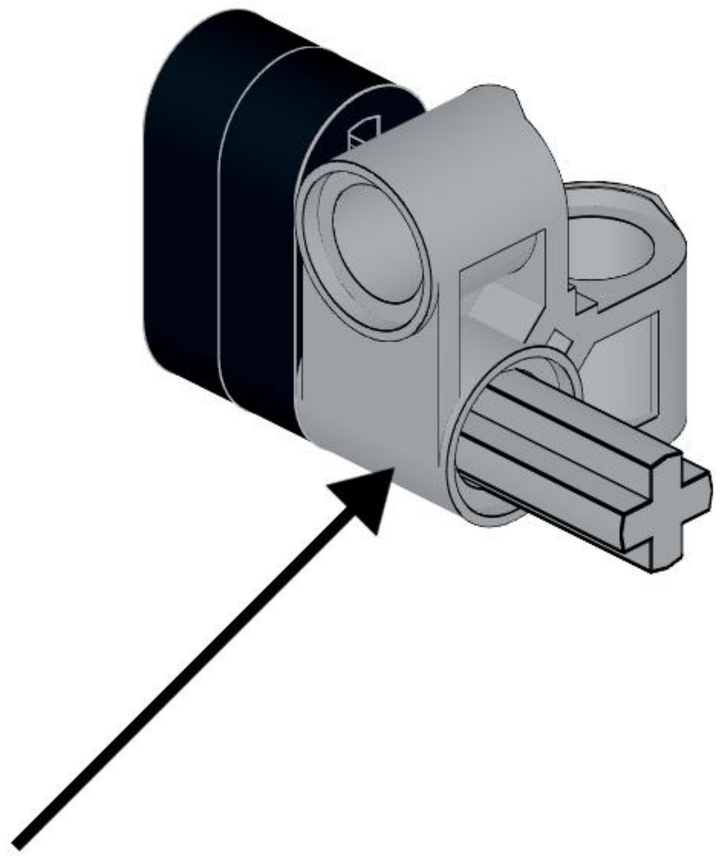

It is critically important that the orientation of the six (6) 2x2 Cross-blocks in this module are correct. If they are connected to the stepper axles (later step) incorrectly oriented, the mechanism will not run. Please pay careful attention to these parts.

36

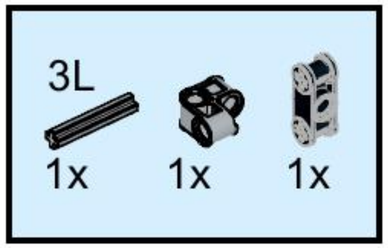

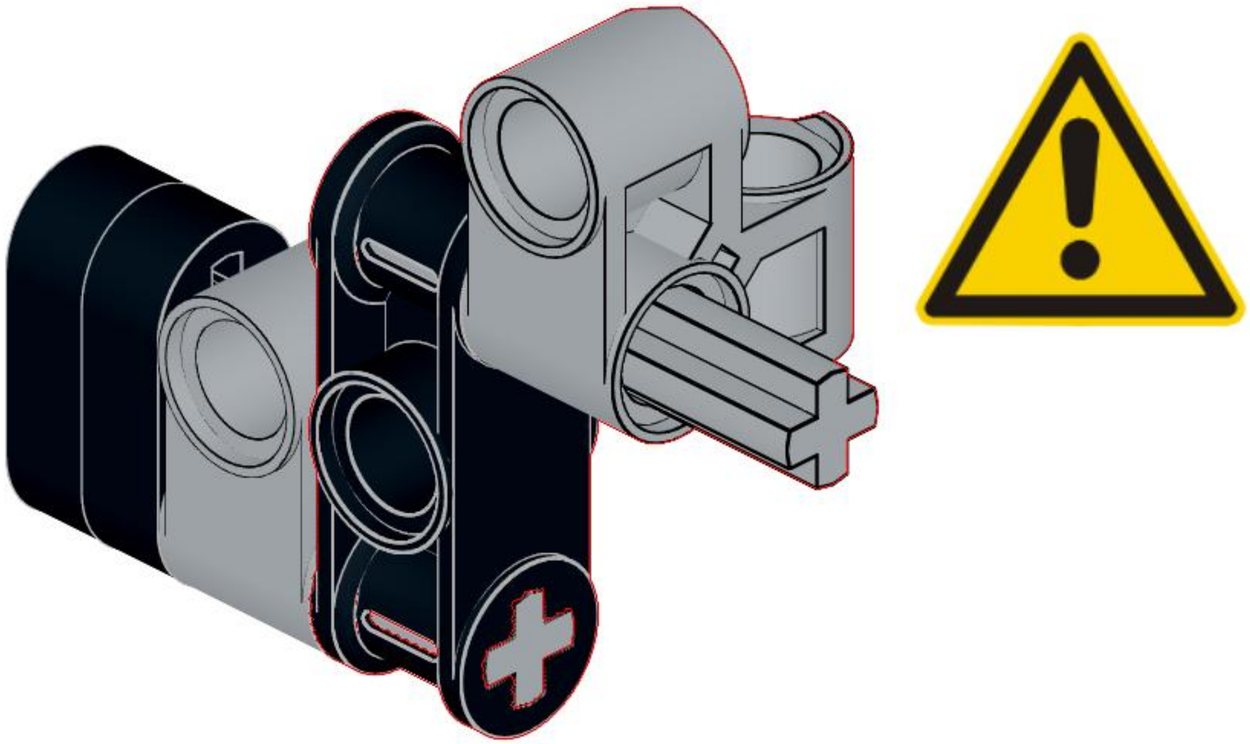

37

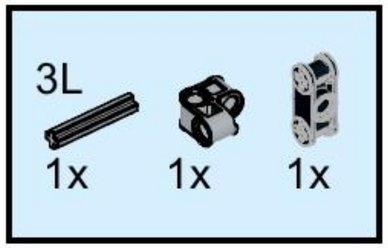

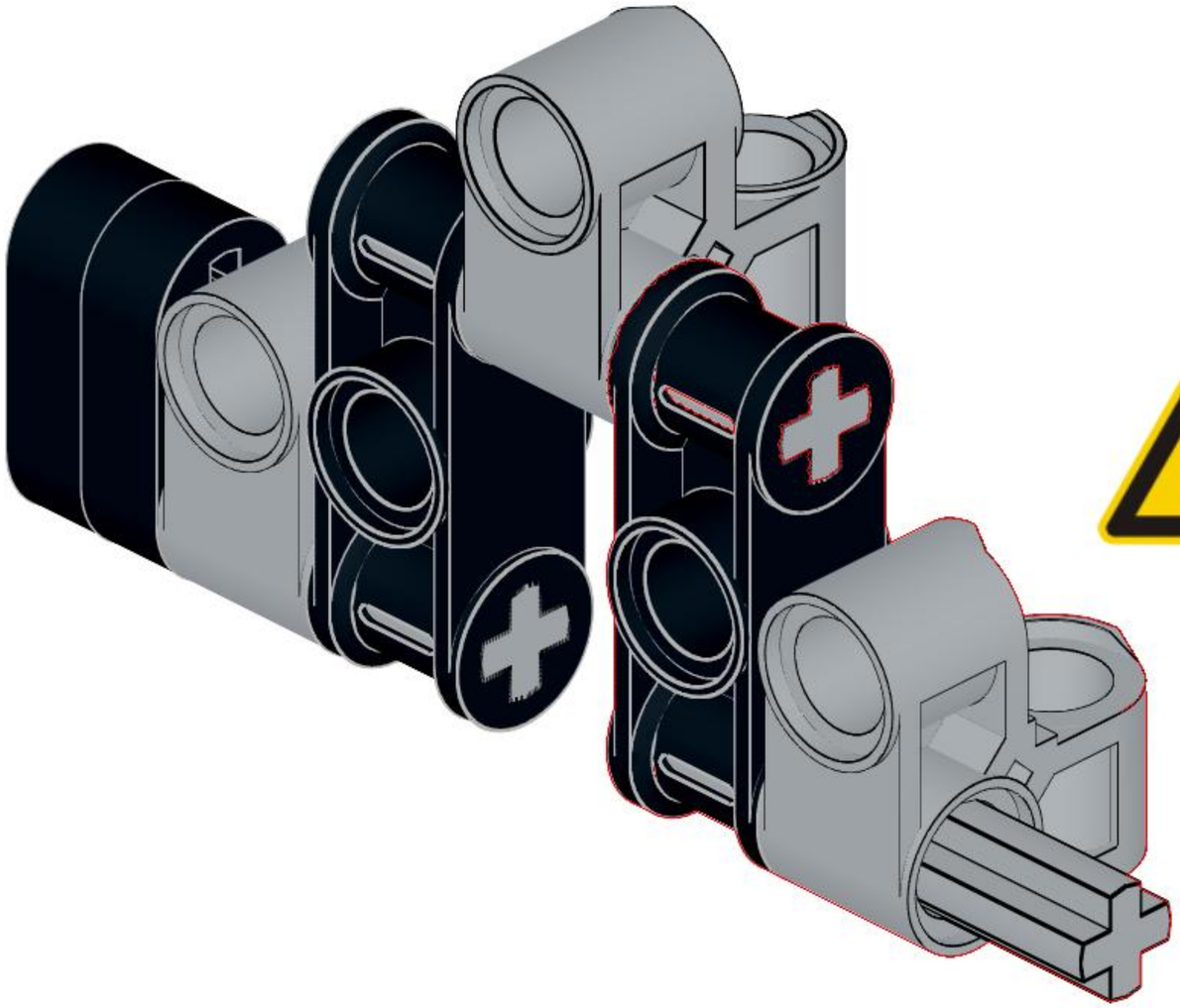

38

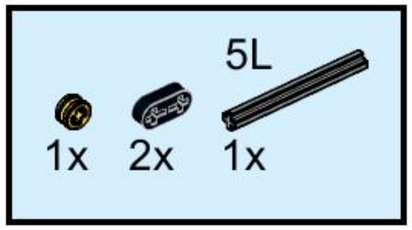

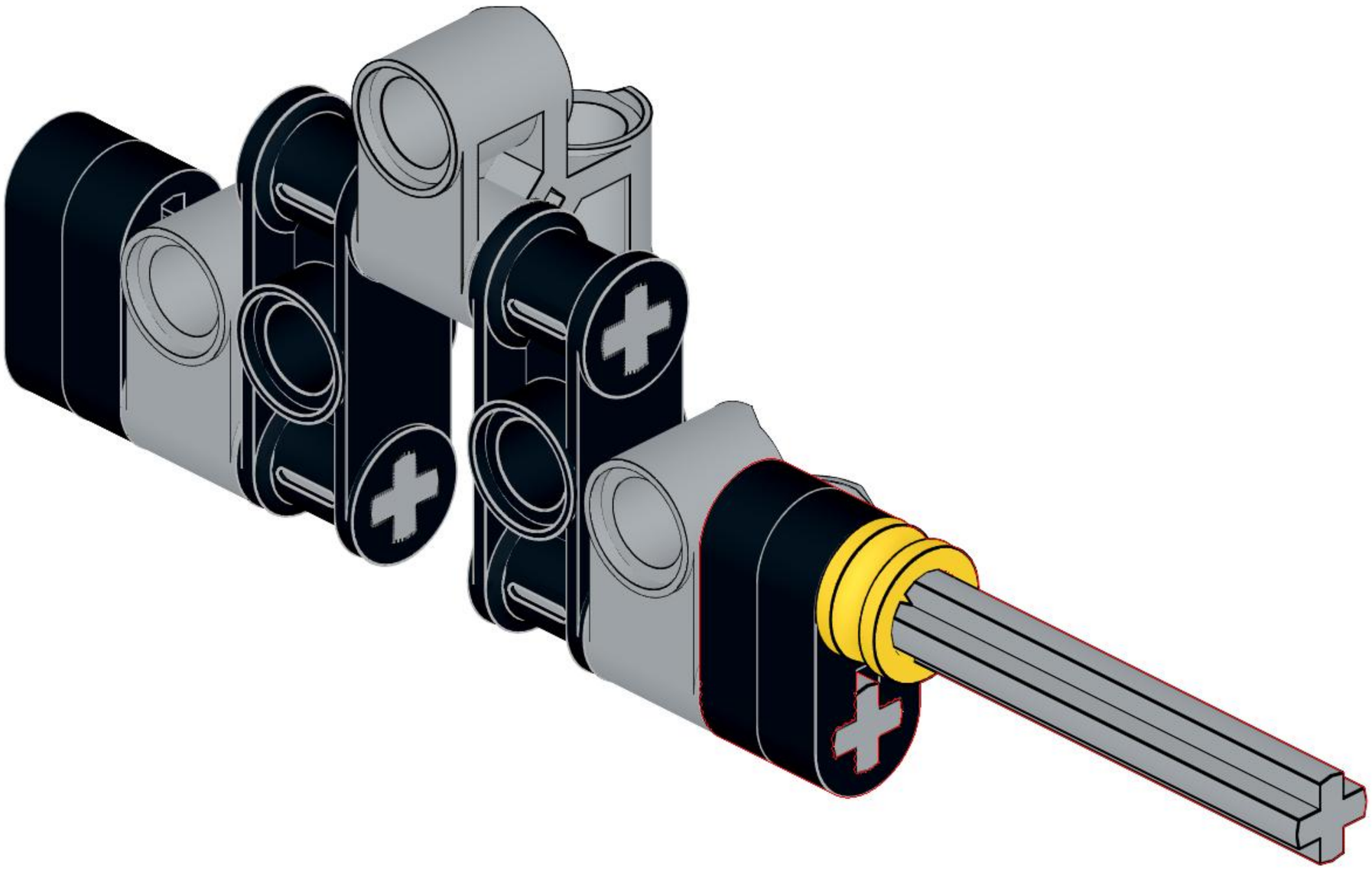

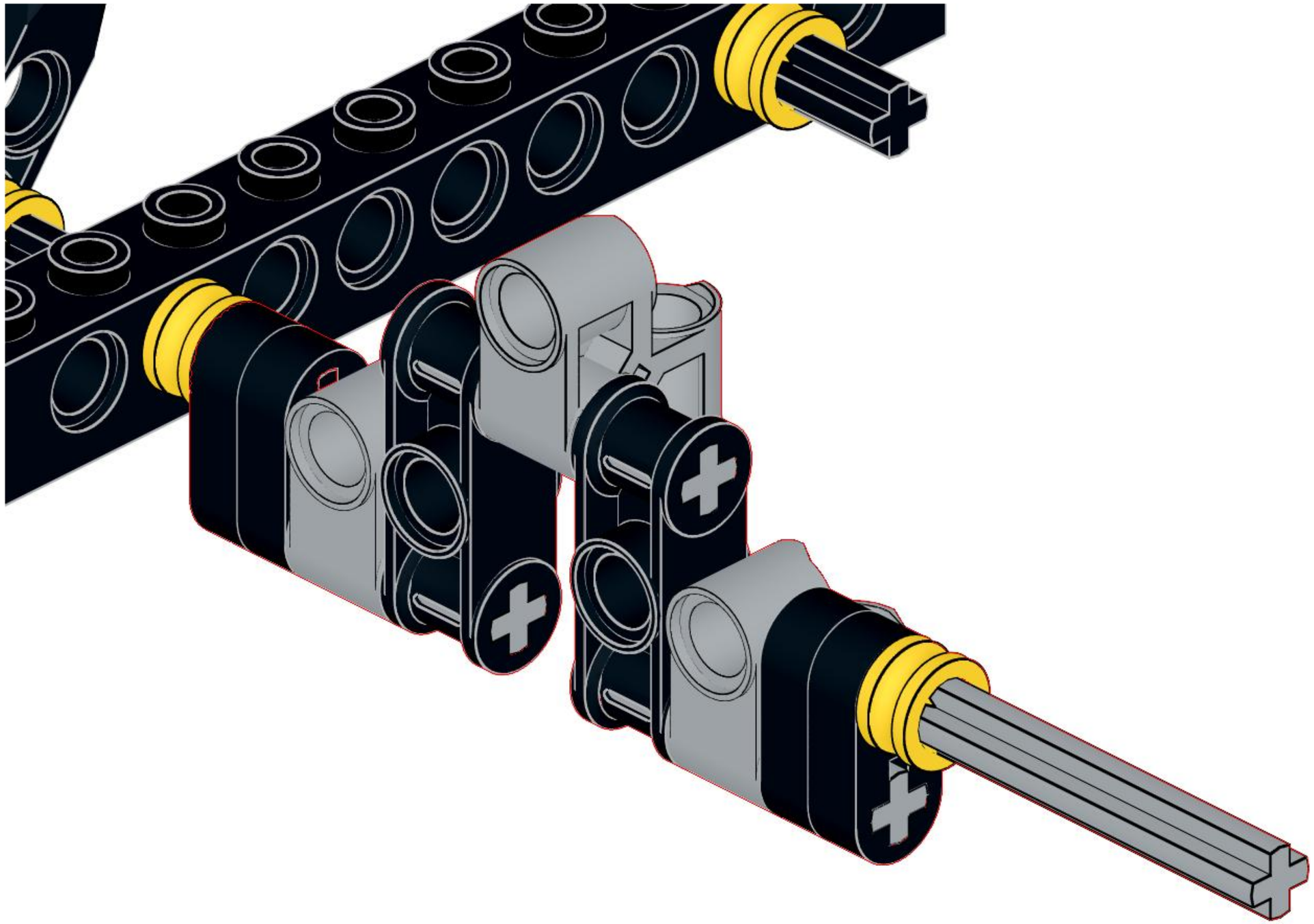

40

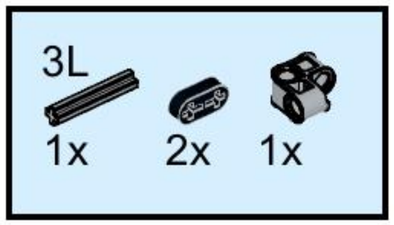

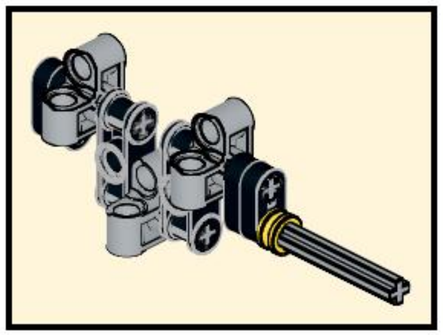

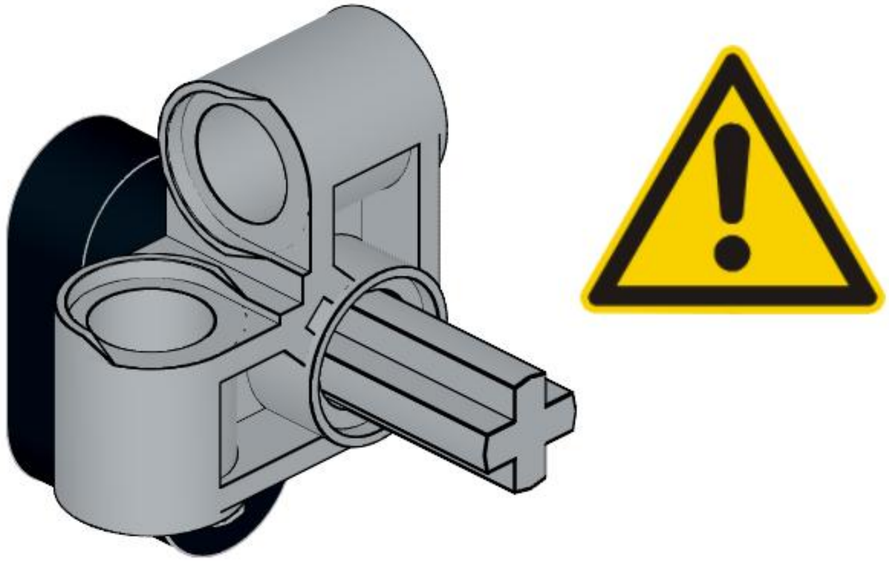

41

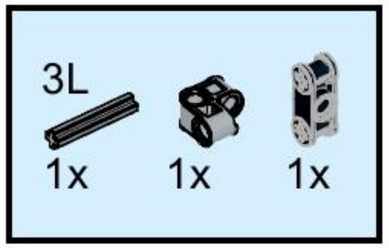

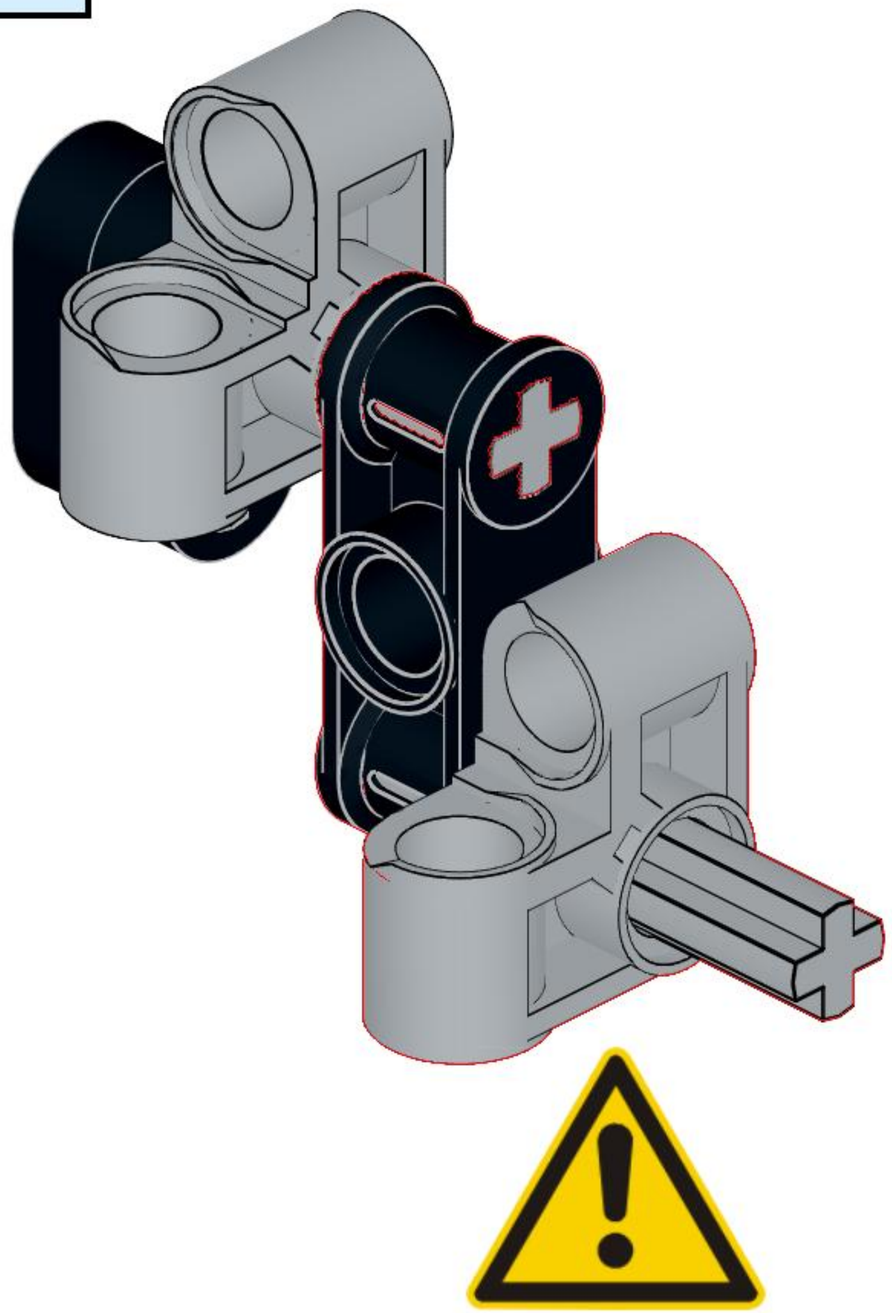

42

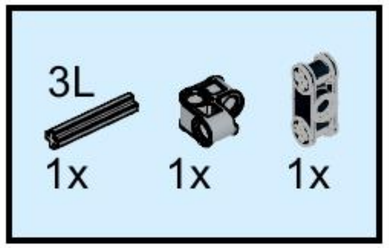

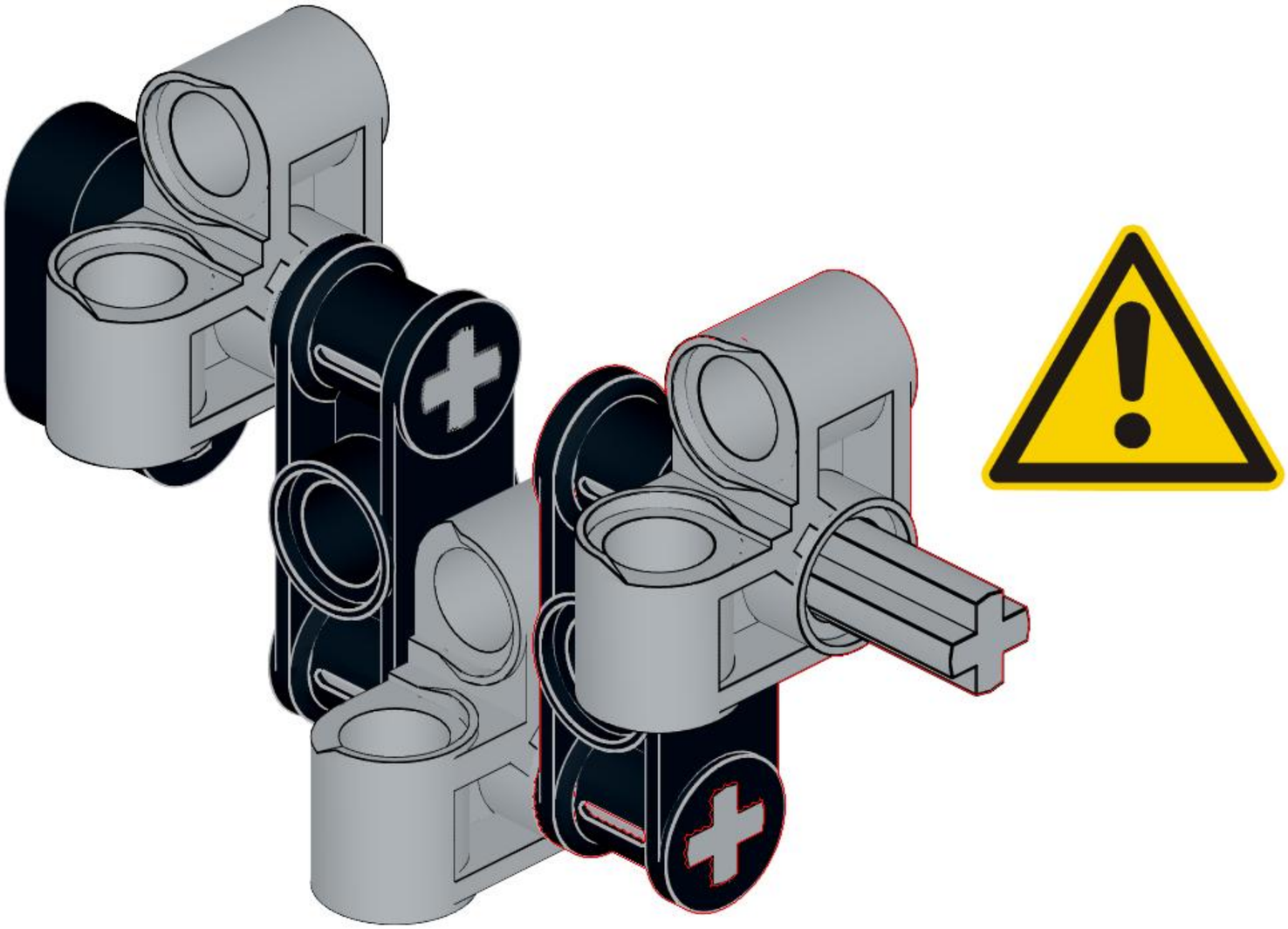

43

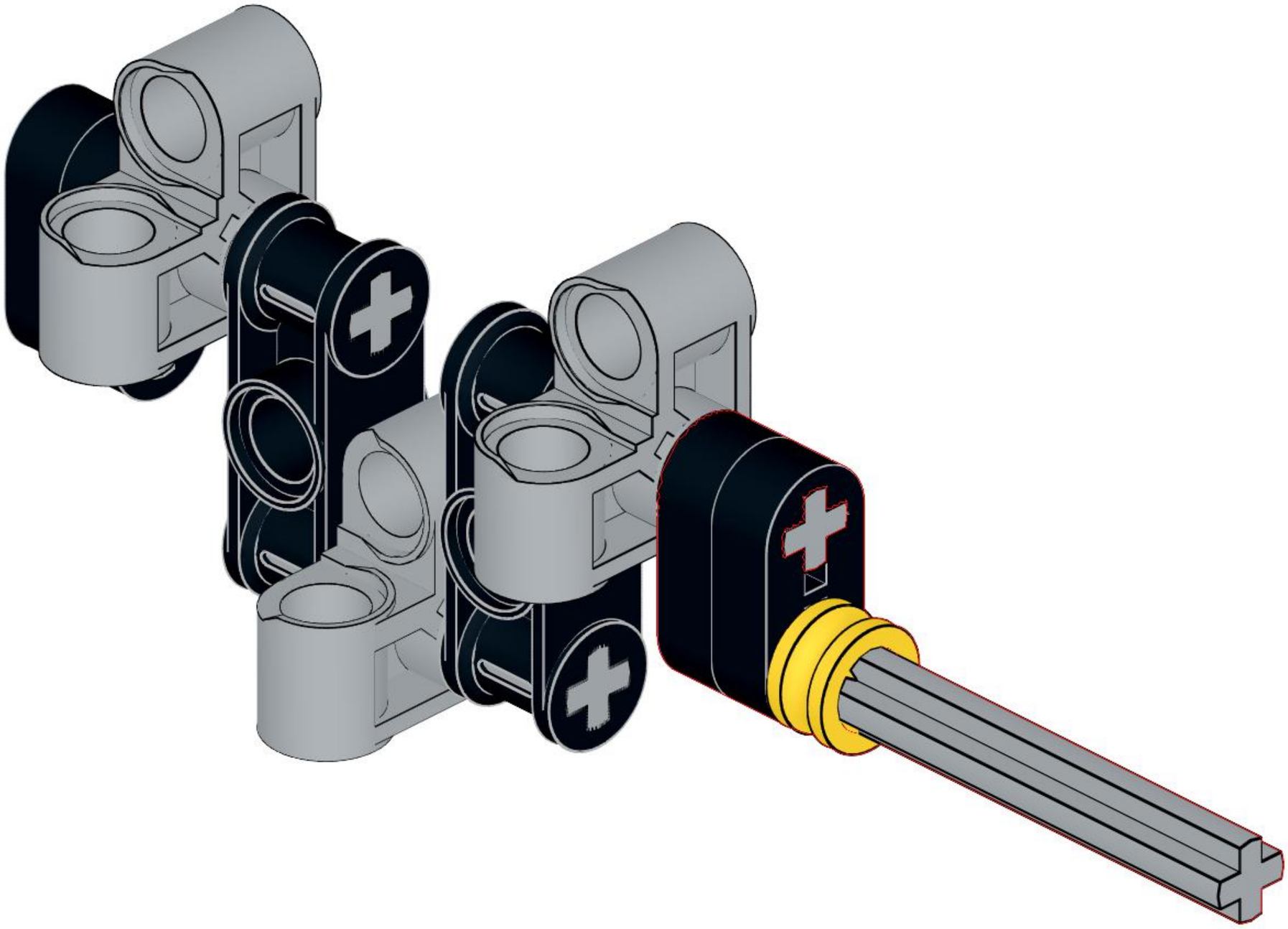

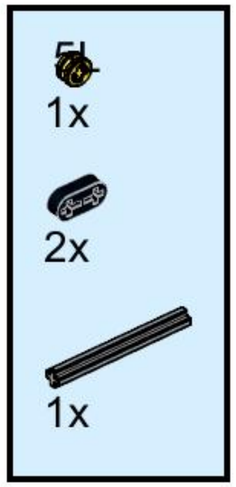

44

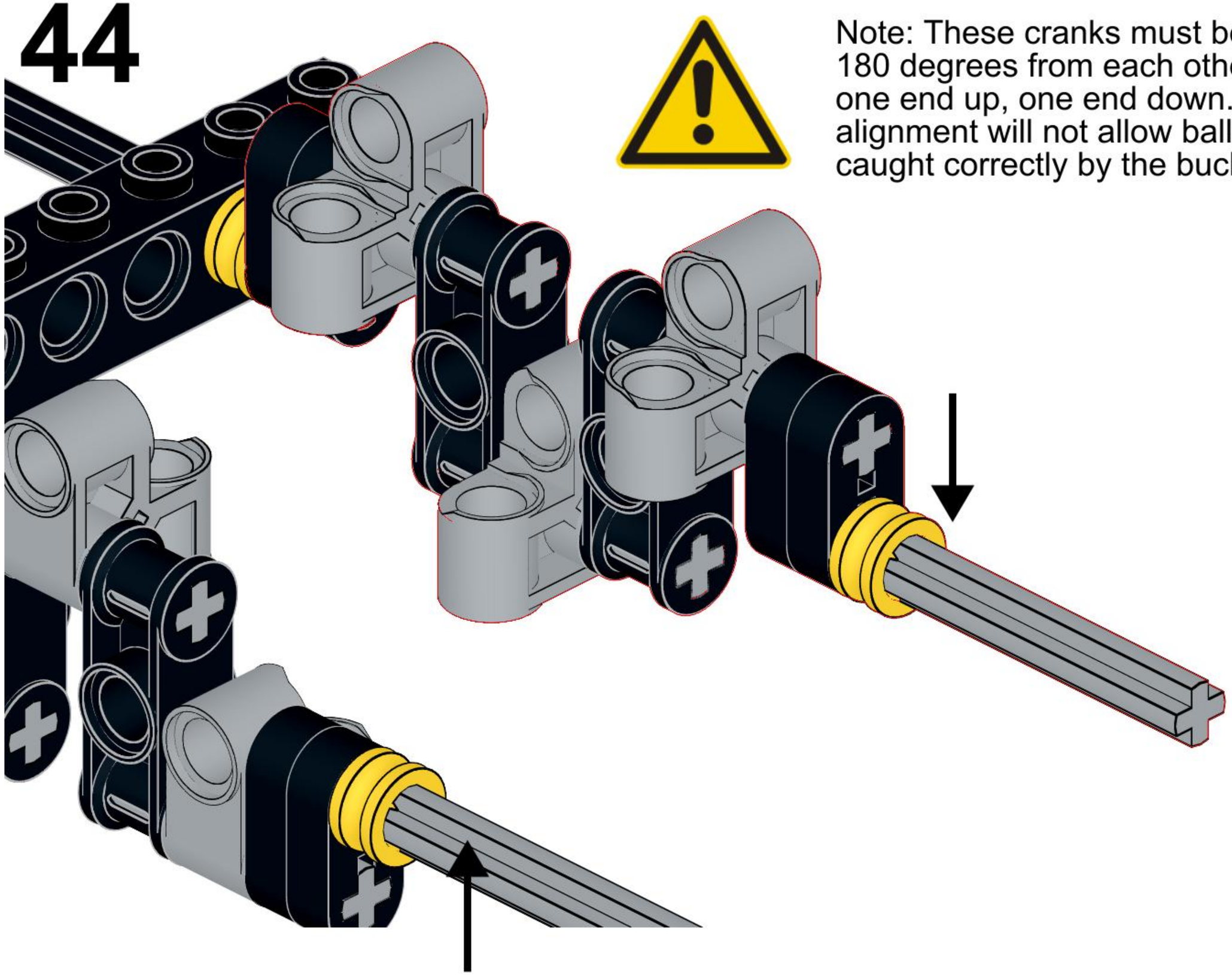

Note: These cranks must be oriented 180 degrees from each other. Ie, one end up, one end down. Incorrect alignment will not allow balls to be caught correctly by the buckets.

45

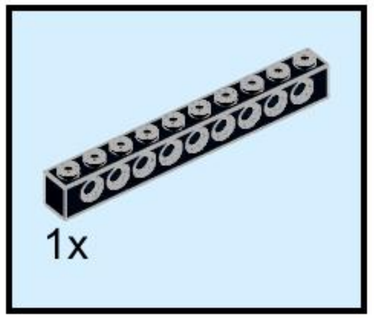

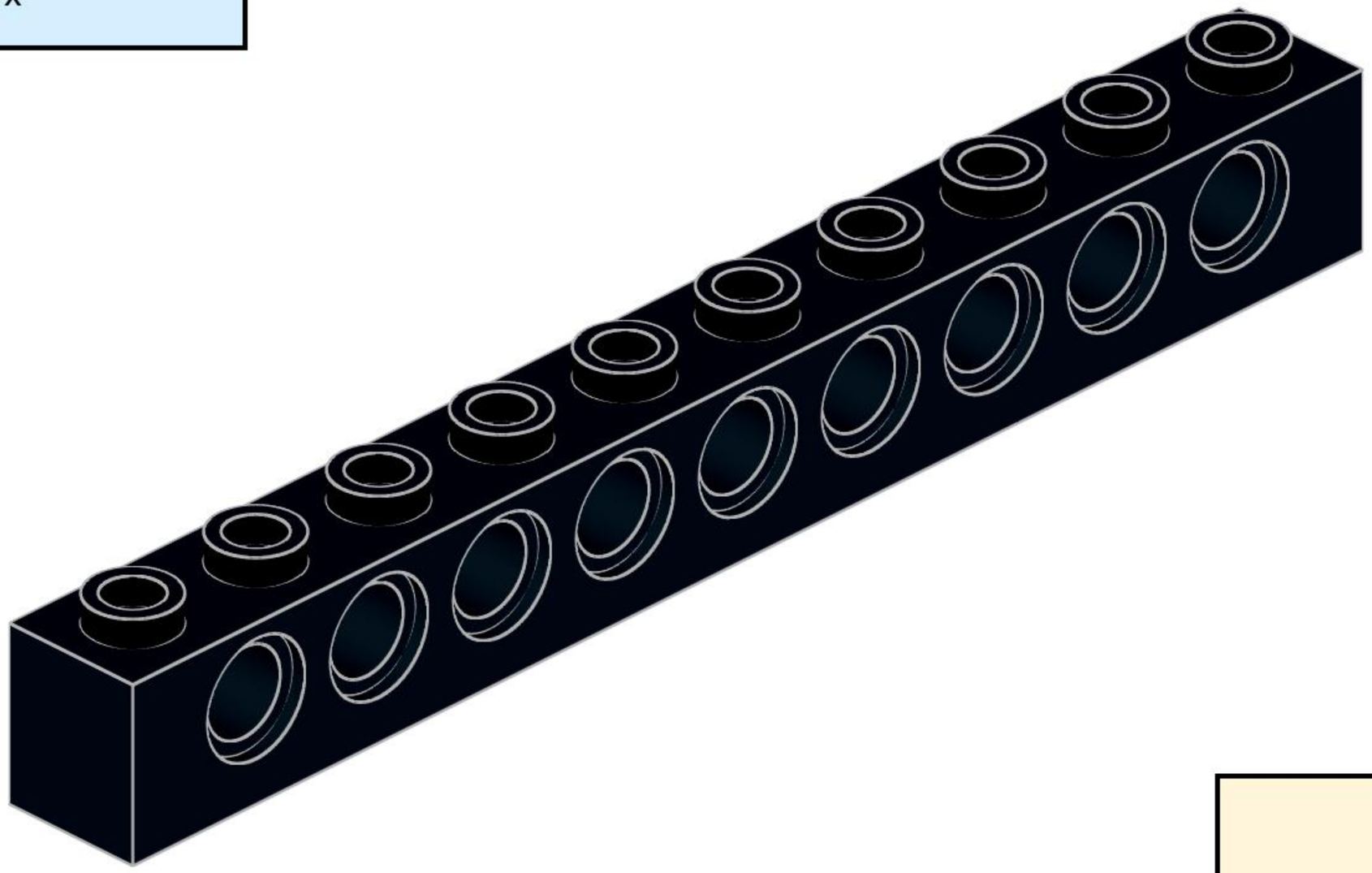

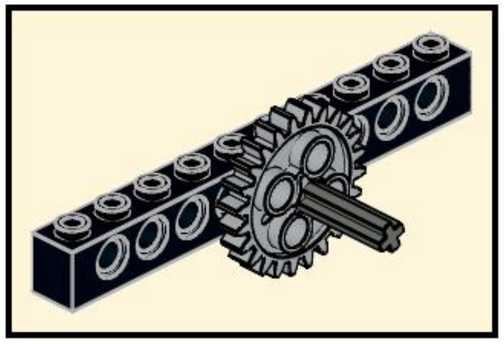

46

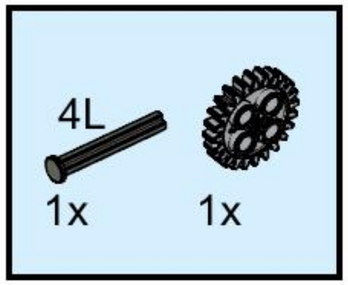

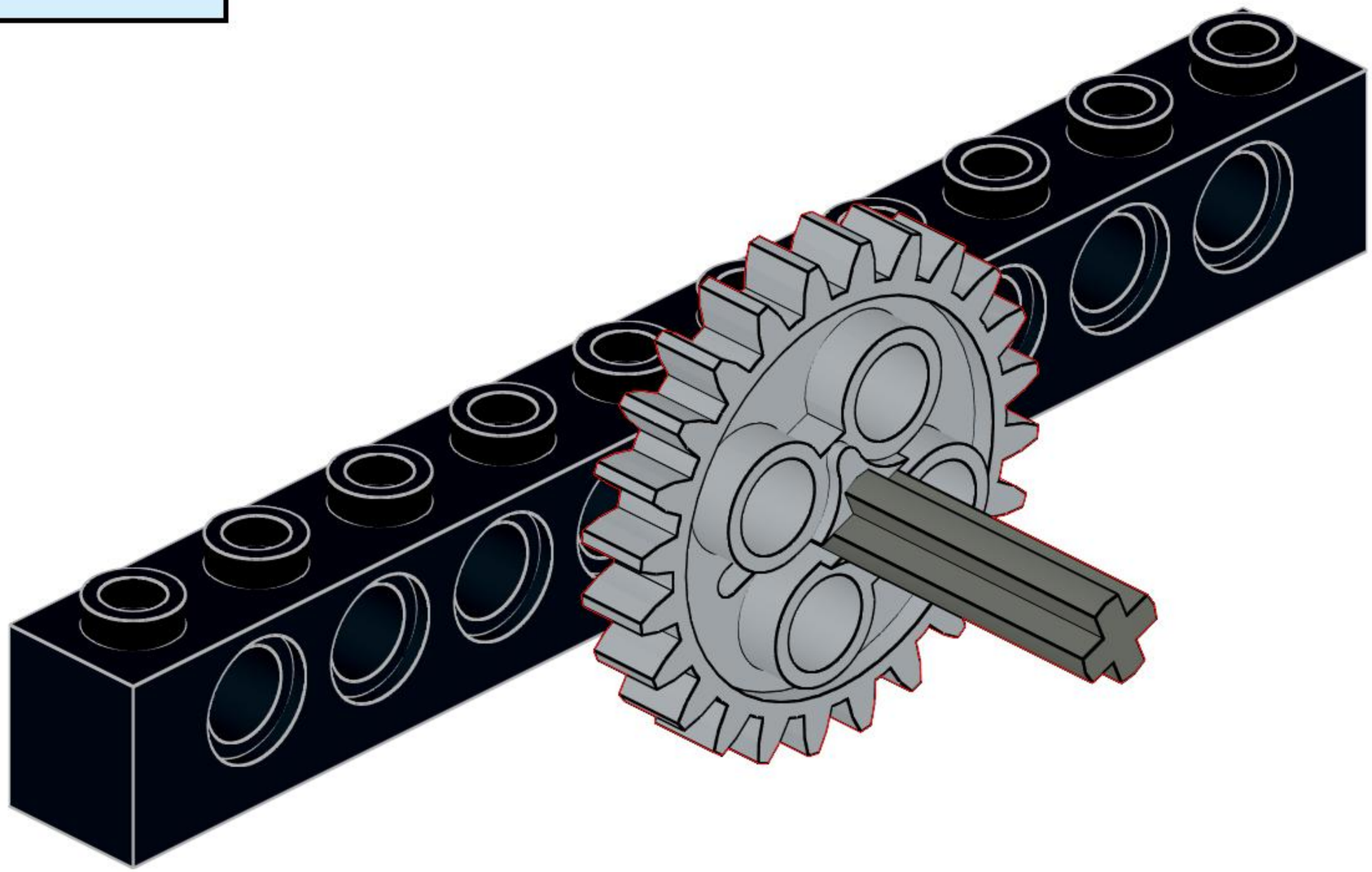

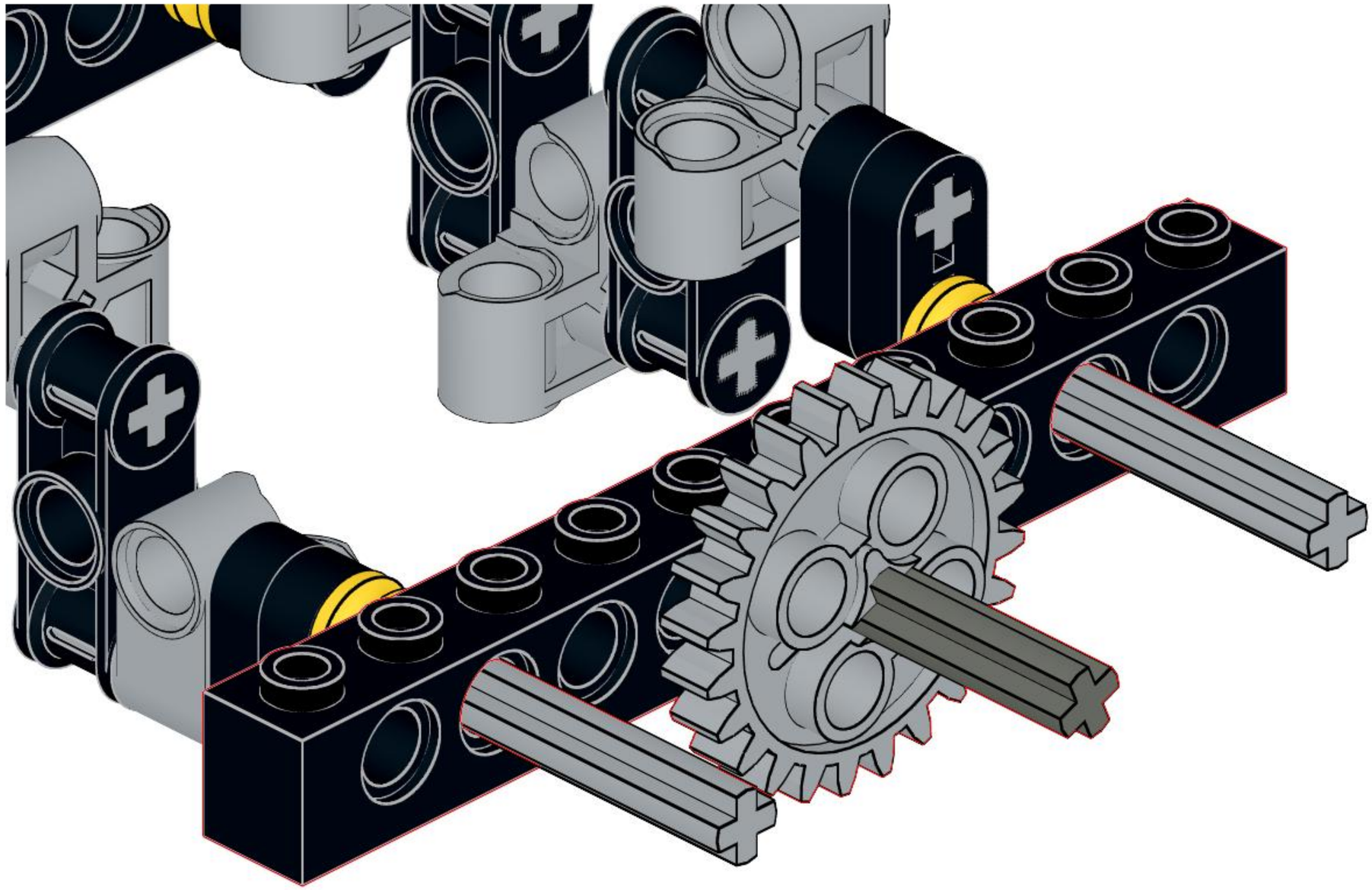

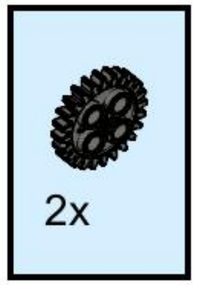

48

Outside axles should both be vertical/horizontal.

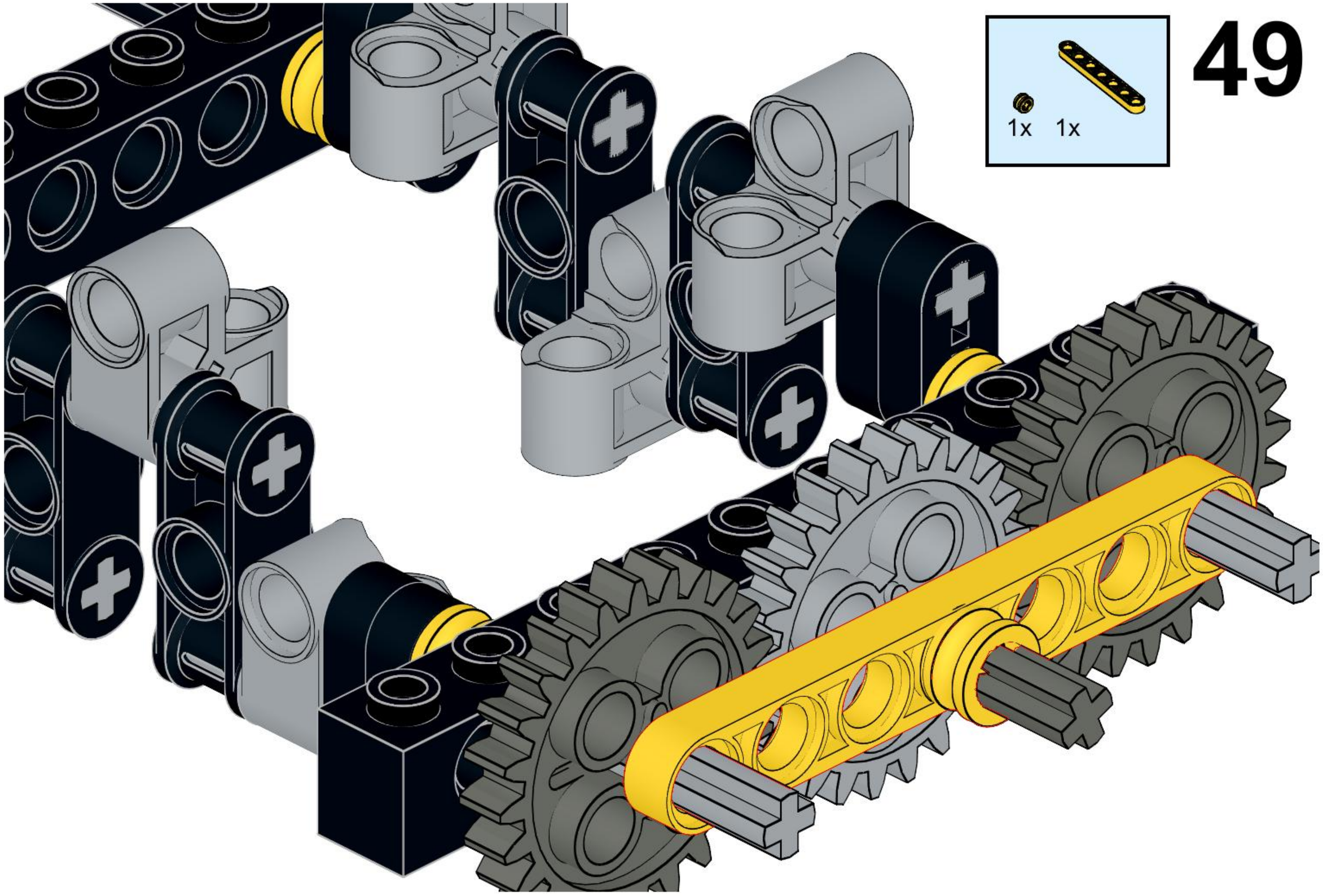
1x
1x

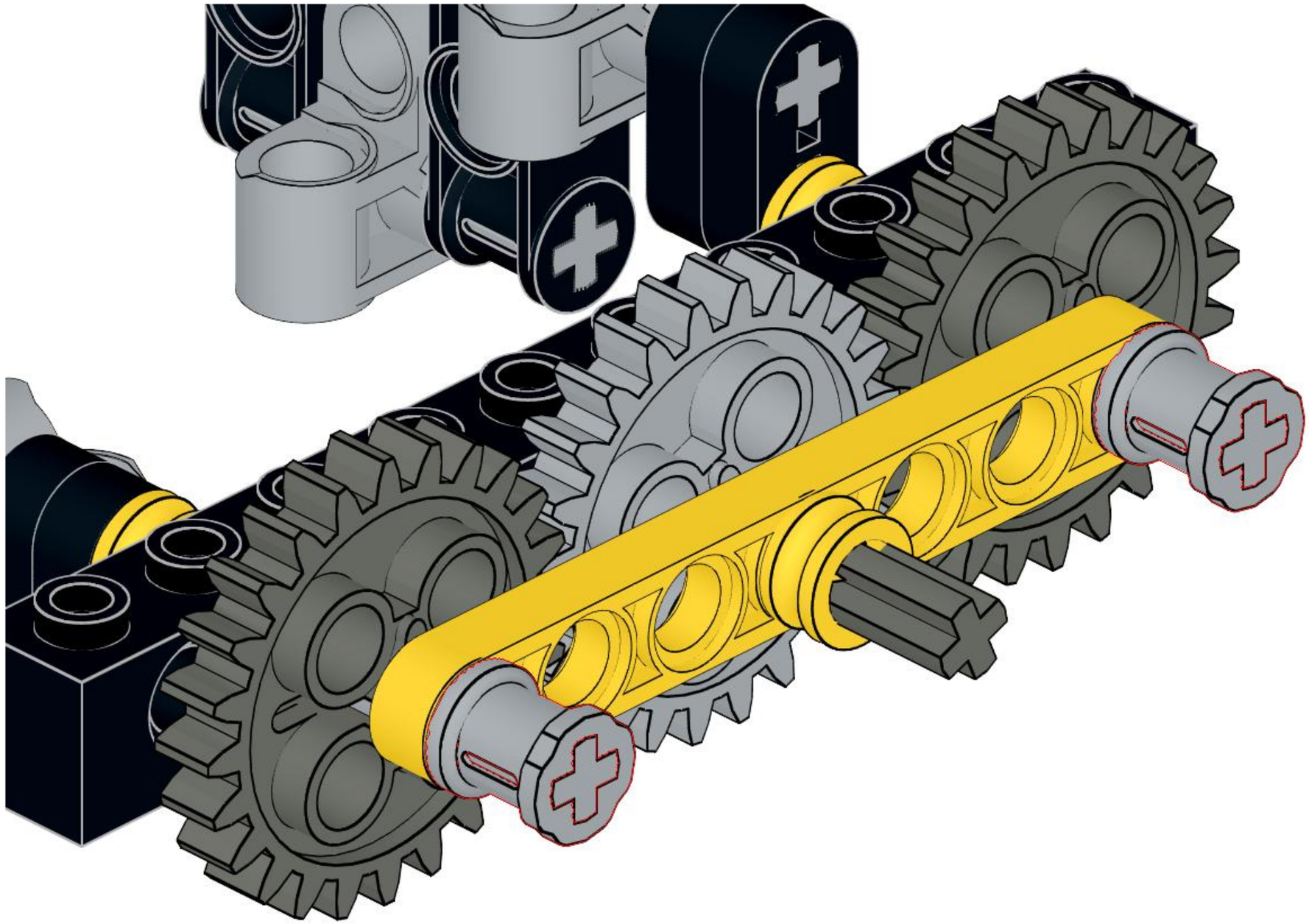

2x

50

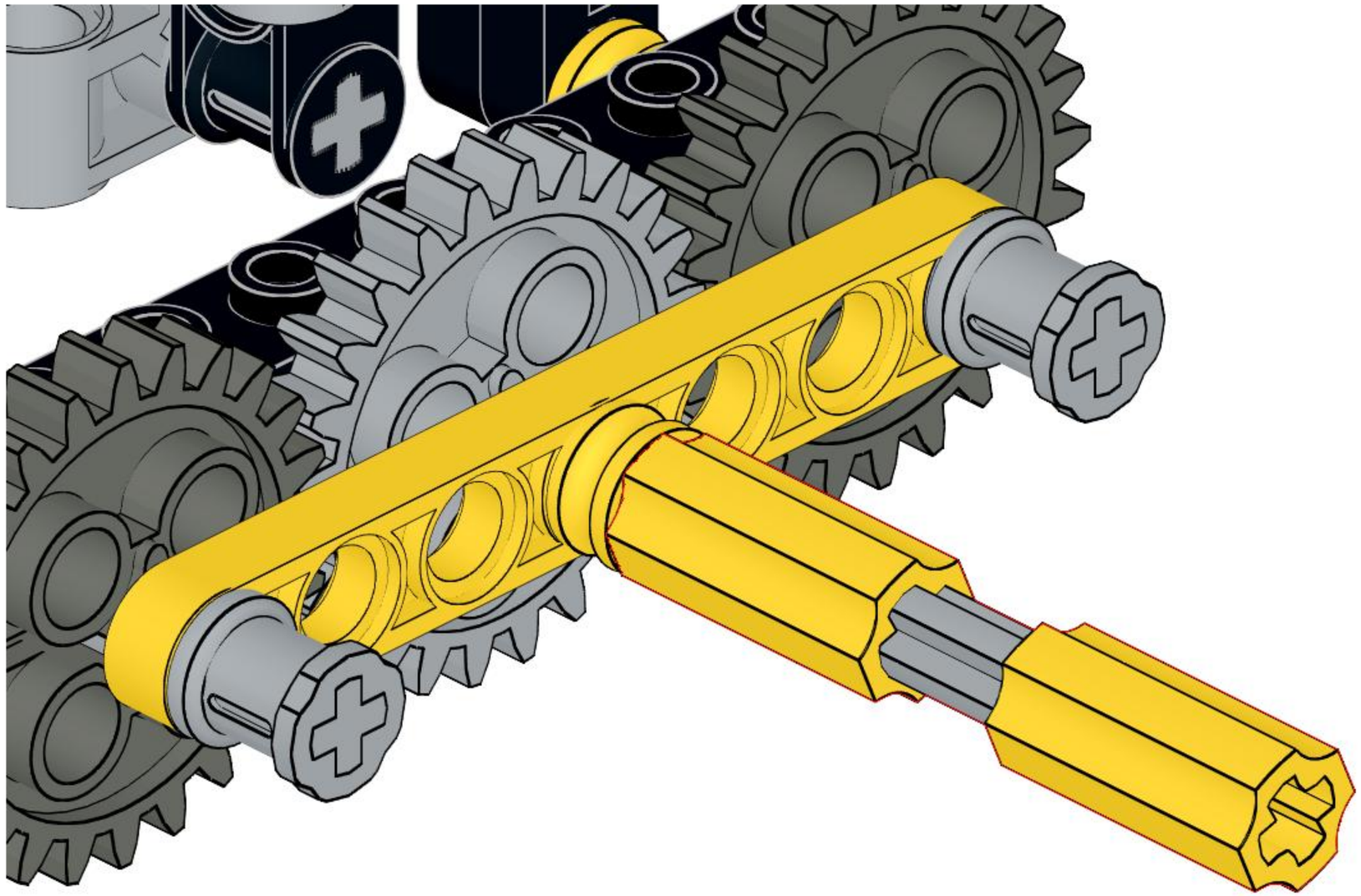

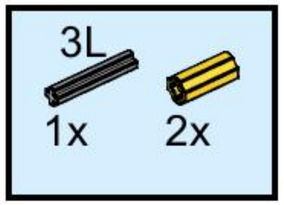

51

52

Take a moment to ensure the mechanism is able to rotate smoothly. You can do this by rotating either of the larger rear gears. Wiggle and adjust until free, smooth movement is achieved.

Once done, rotate the mechanism until it is oriented as shown below, paying particular attention to the cranks being completely vertical.

As new parts are added to the stepper mechanism and surrounds, it is important to verify free movement at each step.

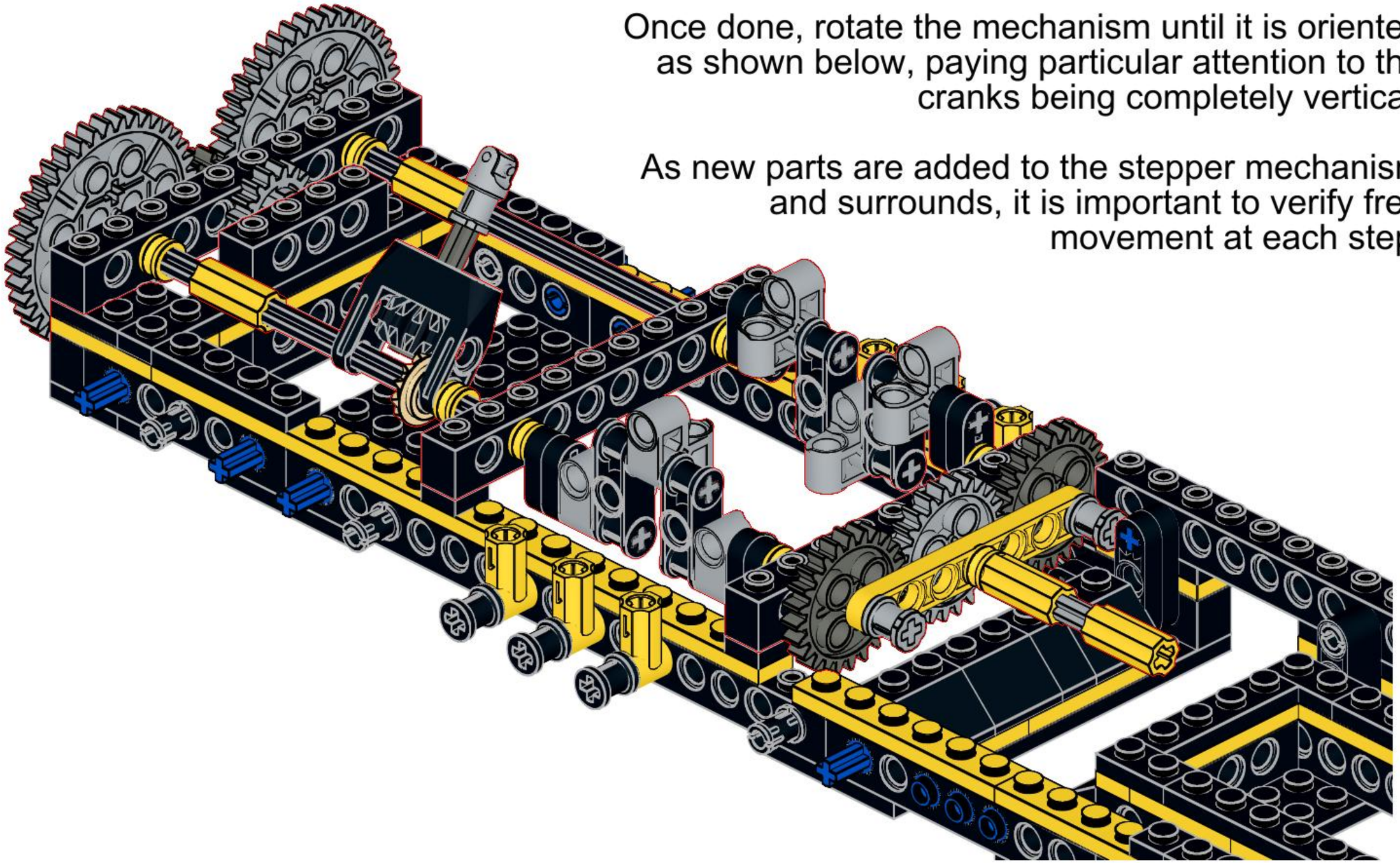

53

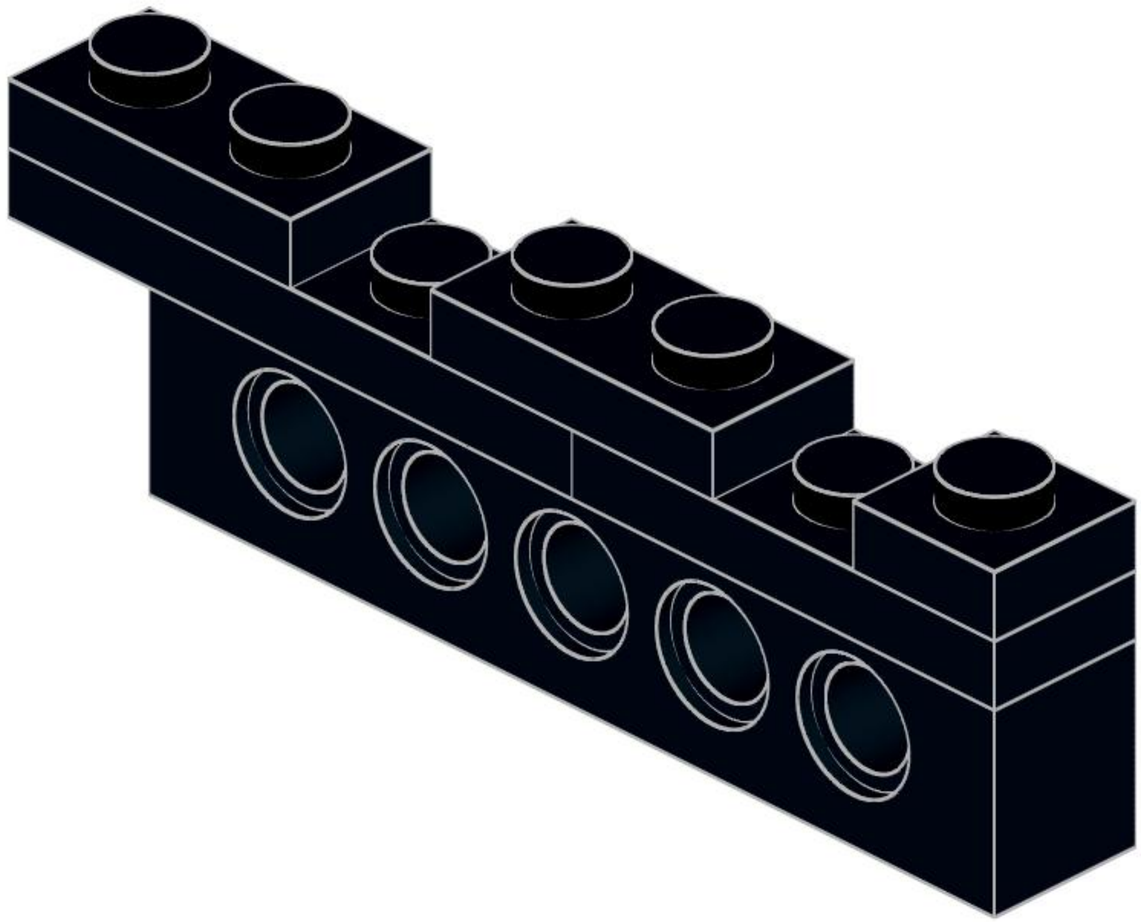

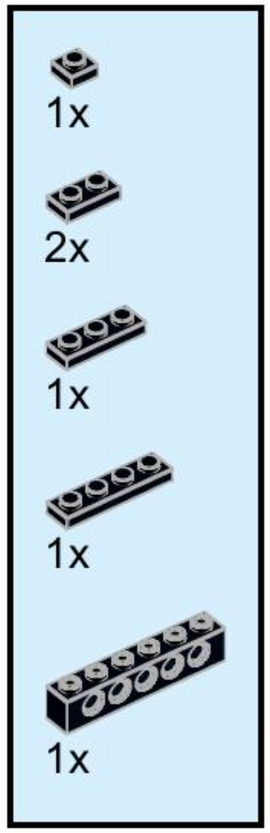

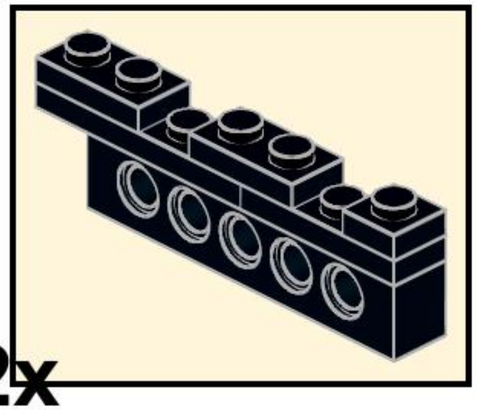

2x

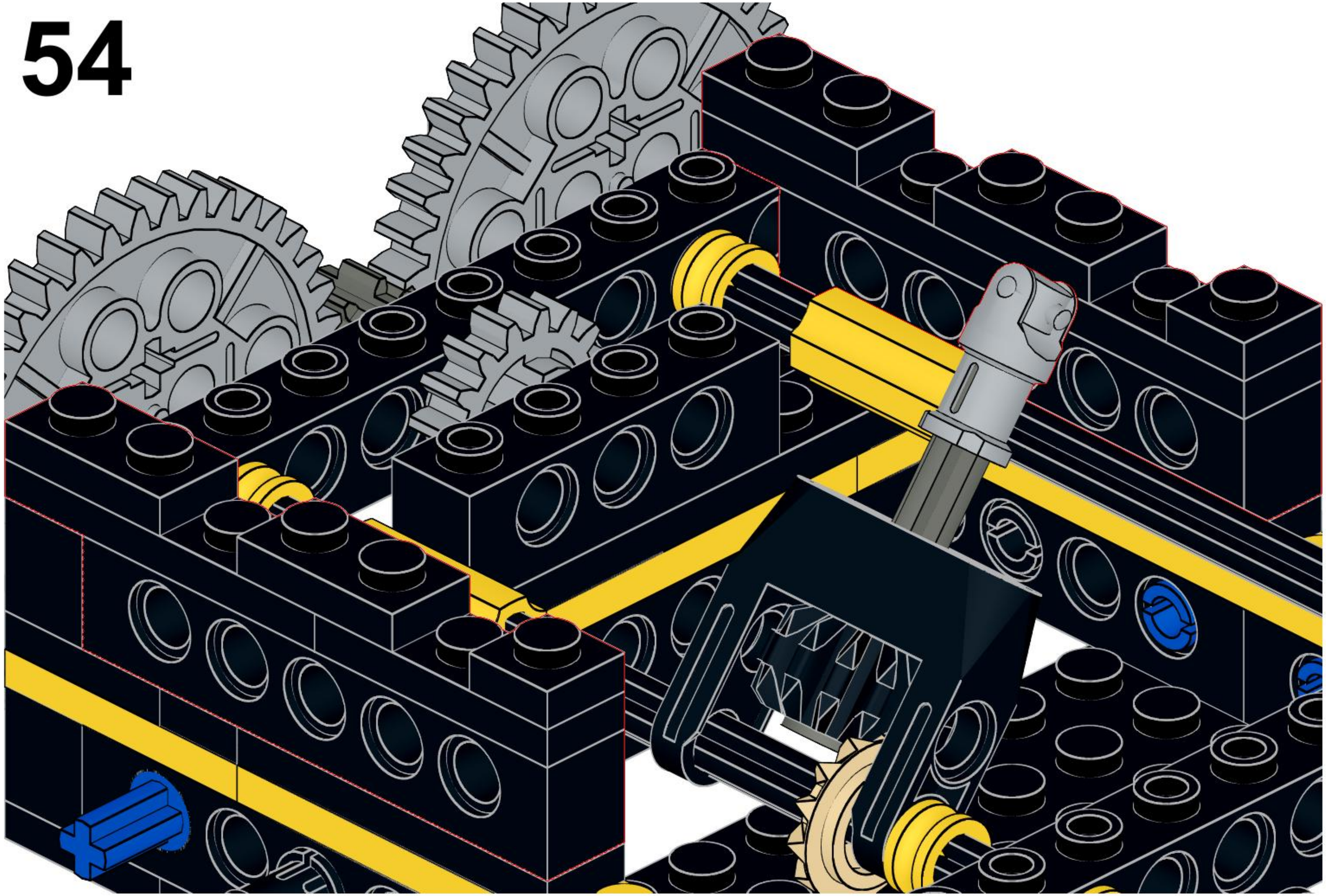

55

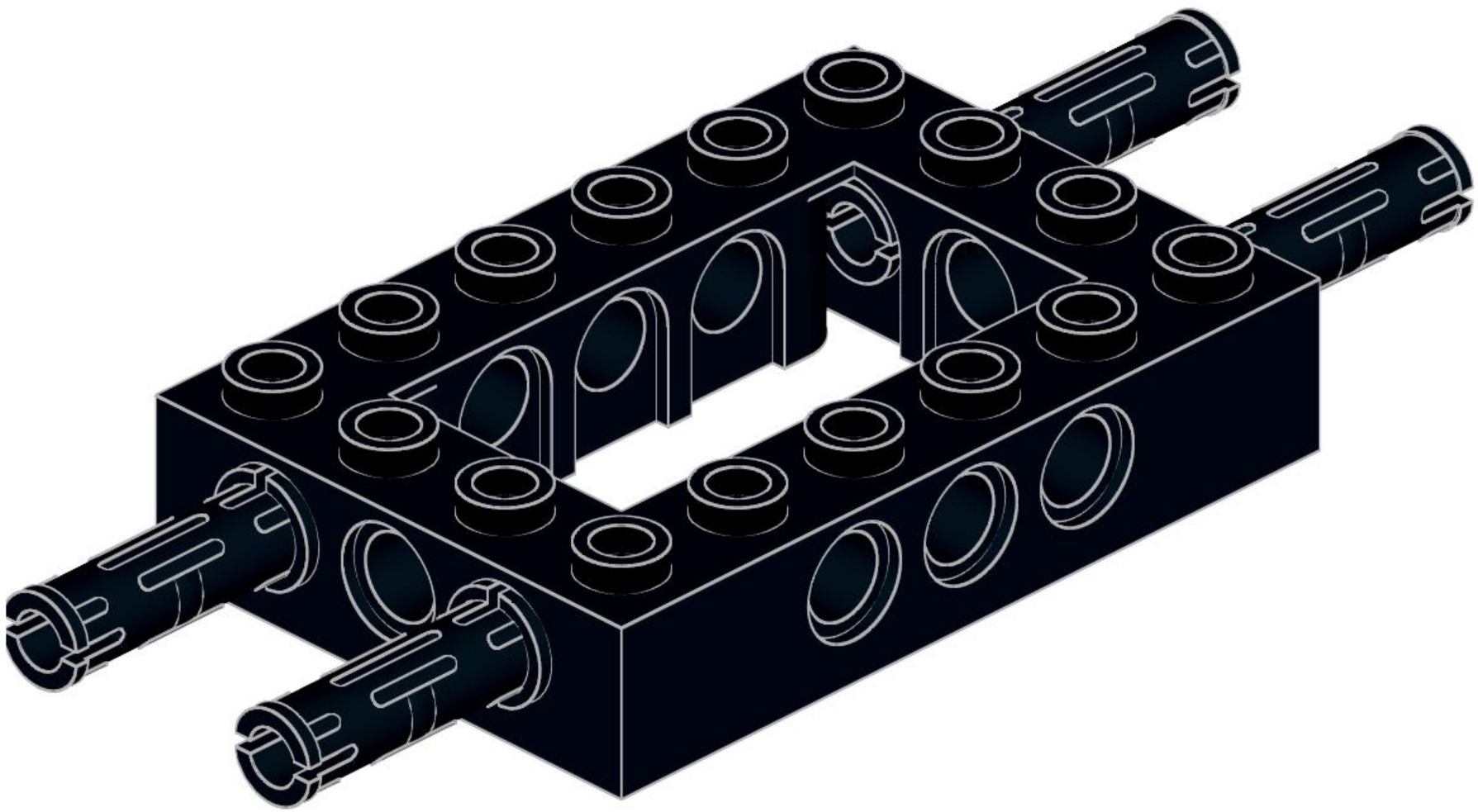

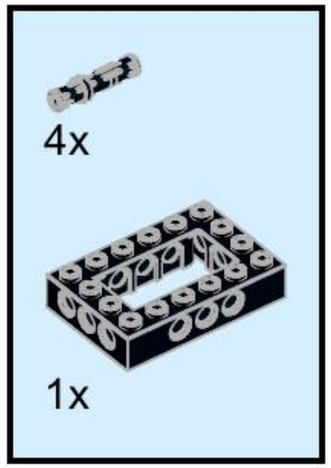

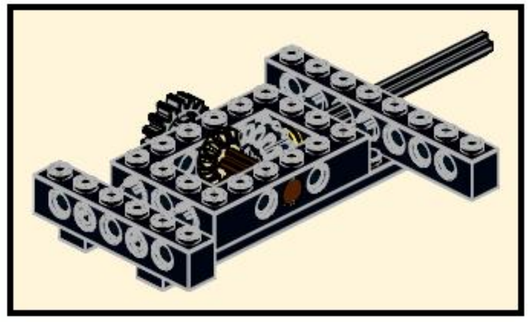

56

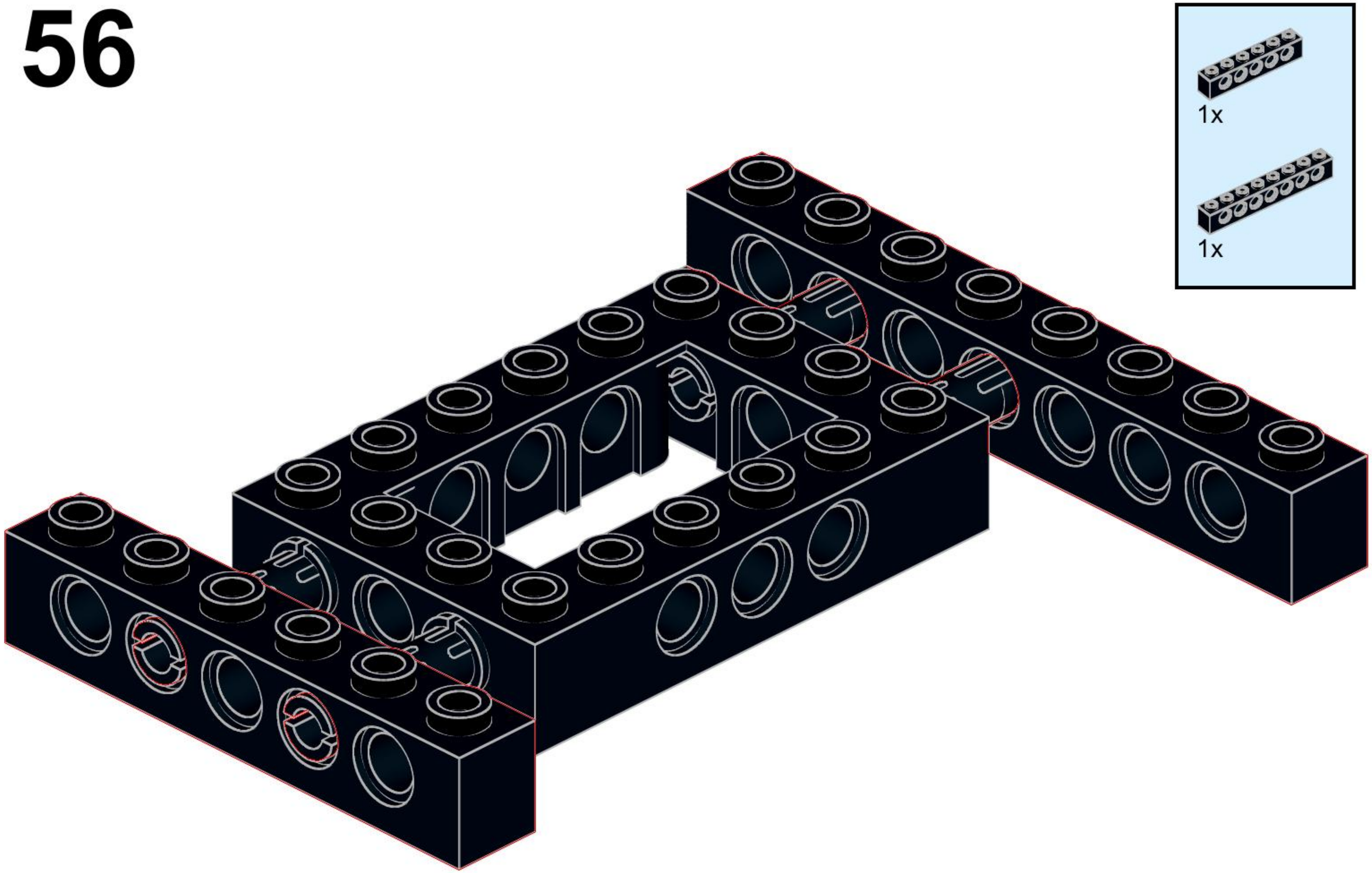

57

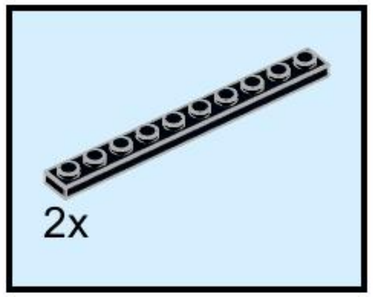

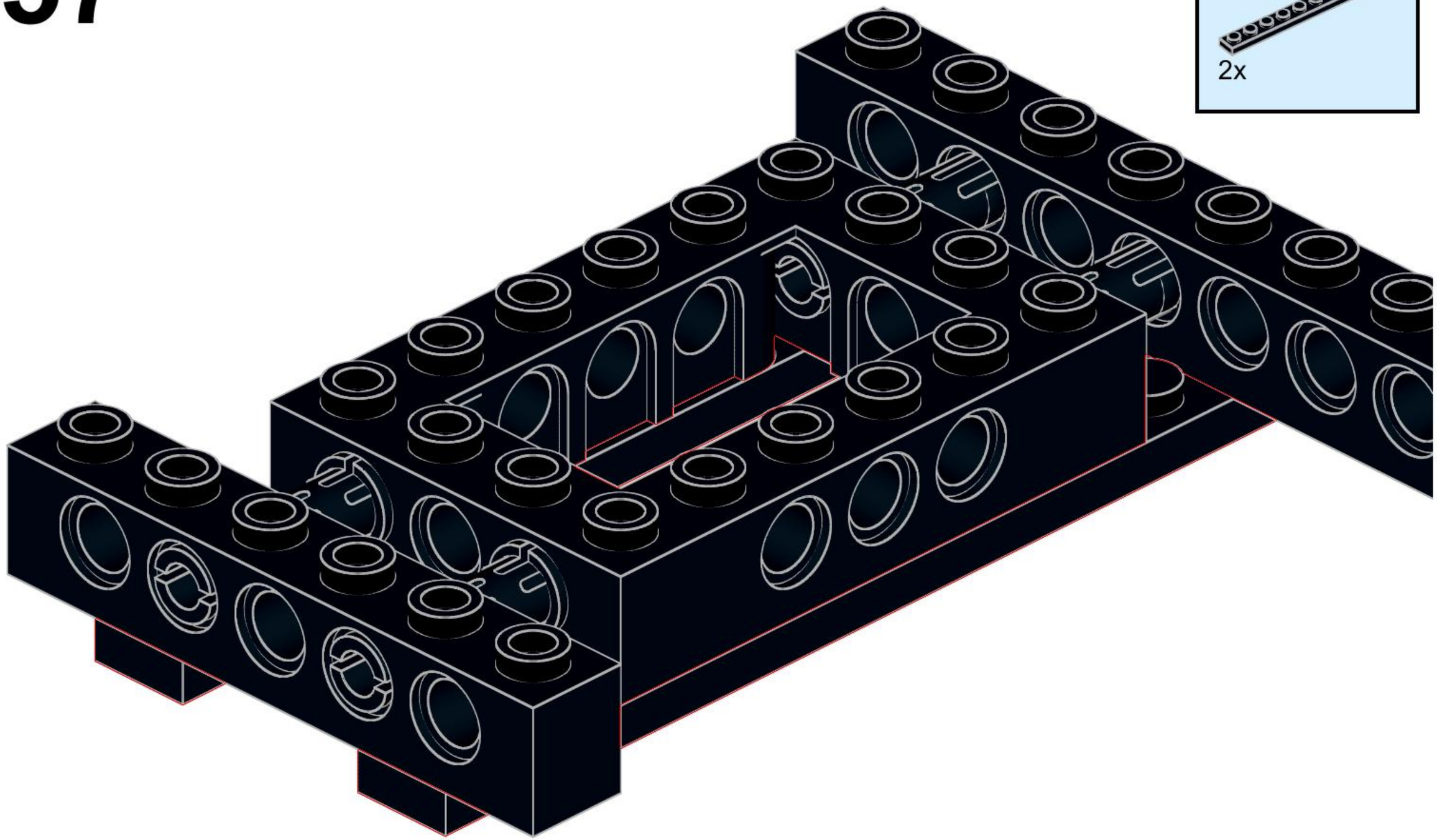

58

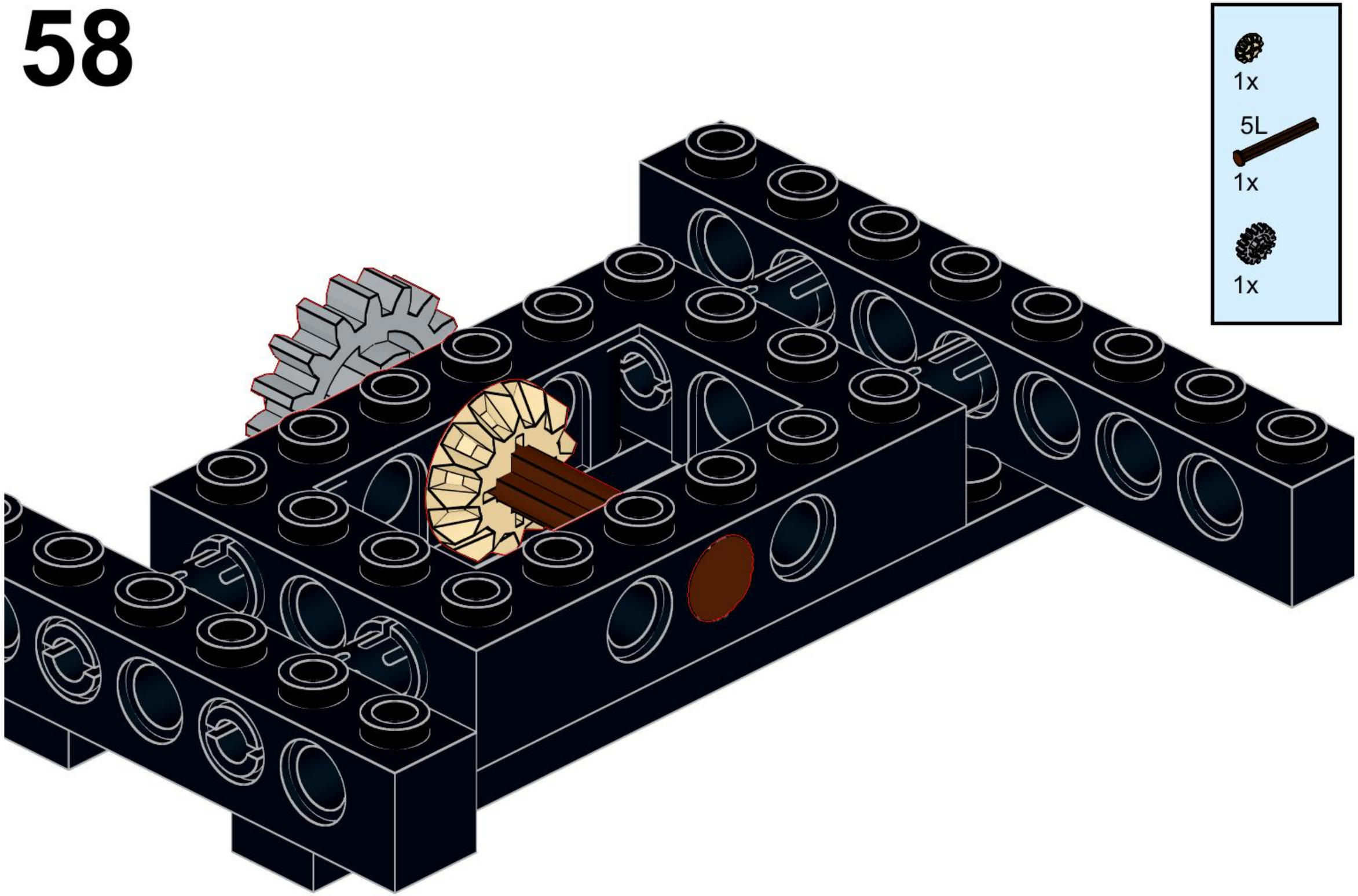

59

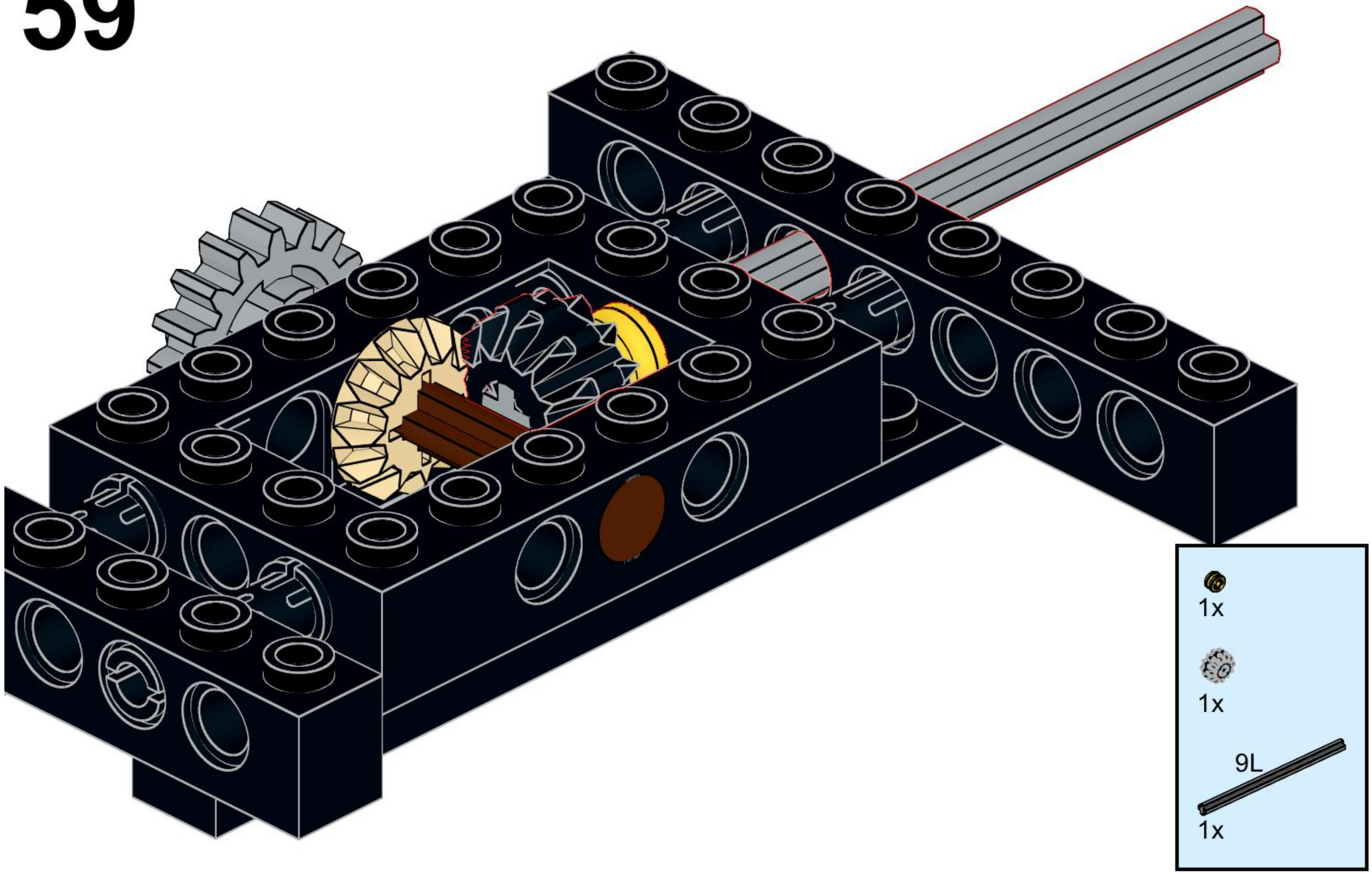

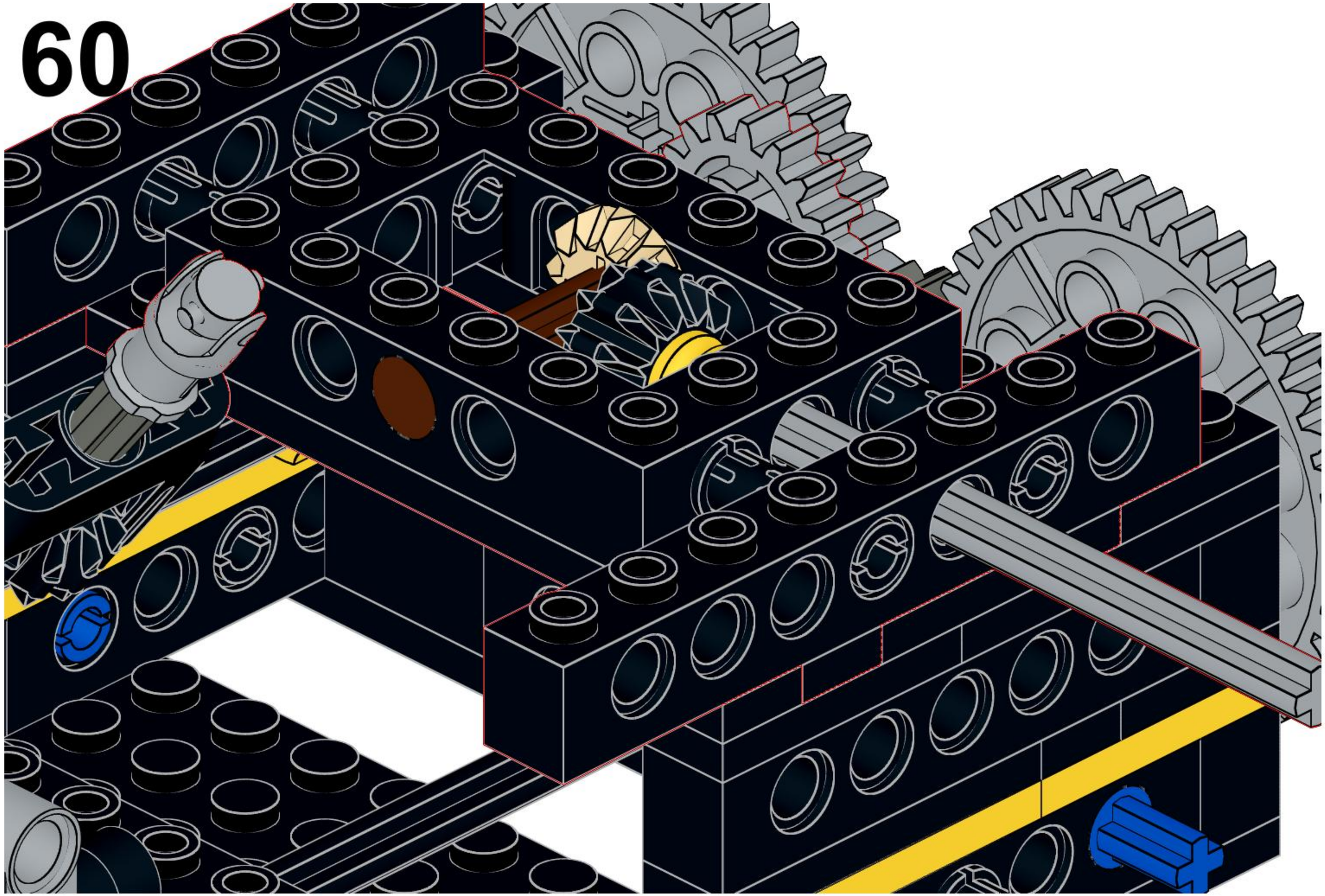

61

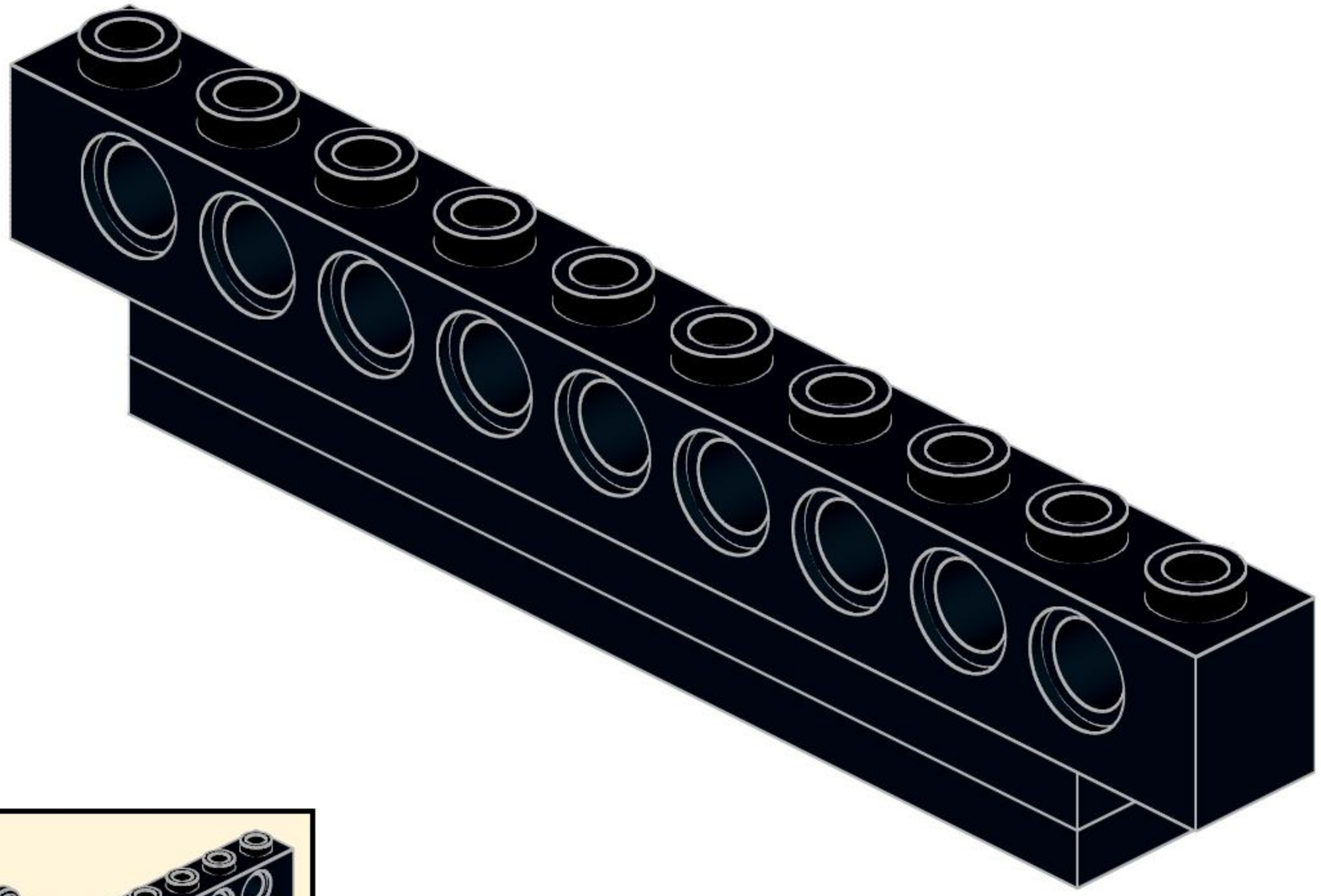

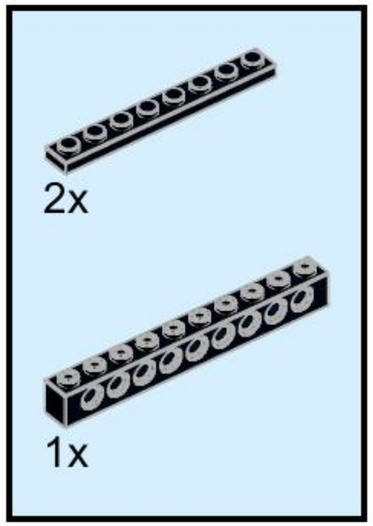

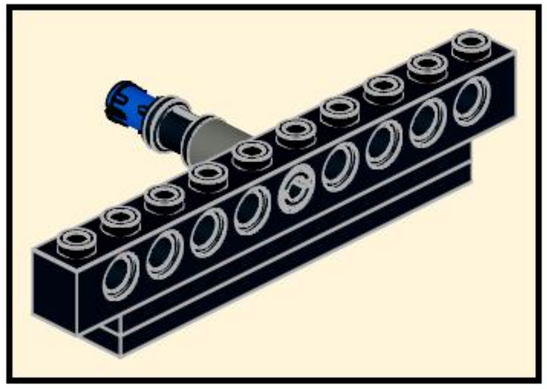

62

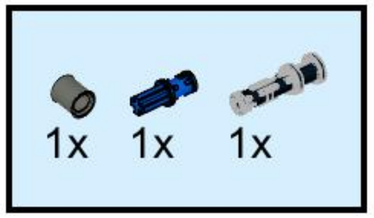

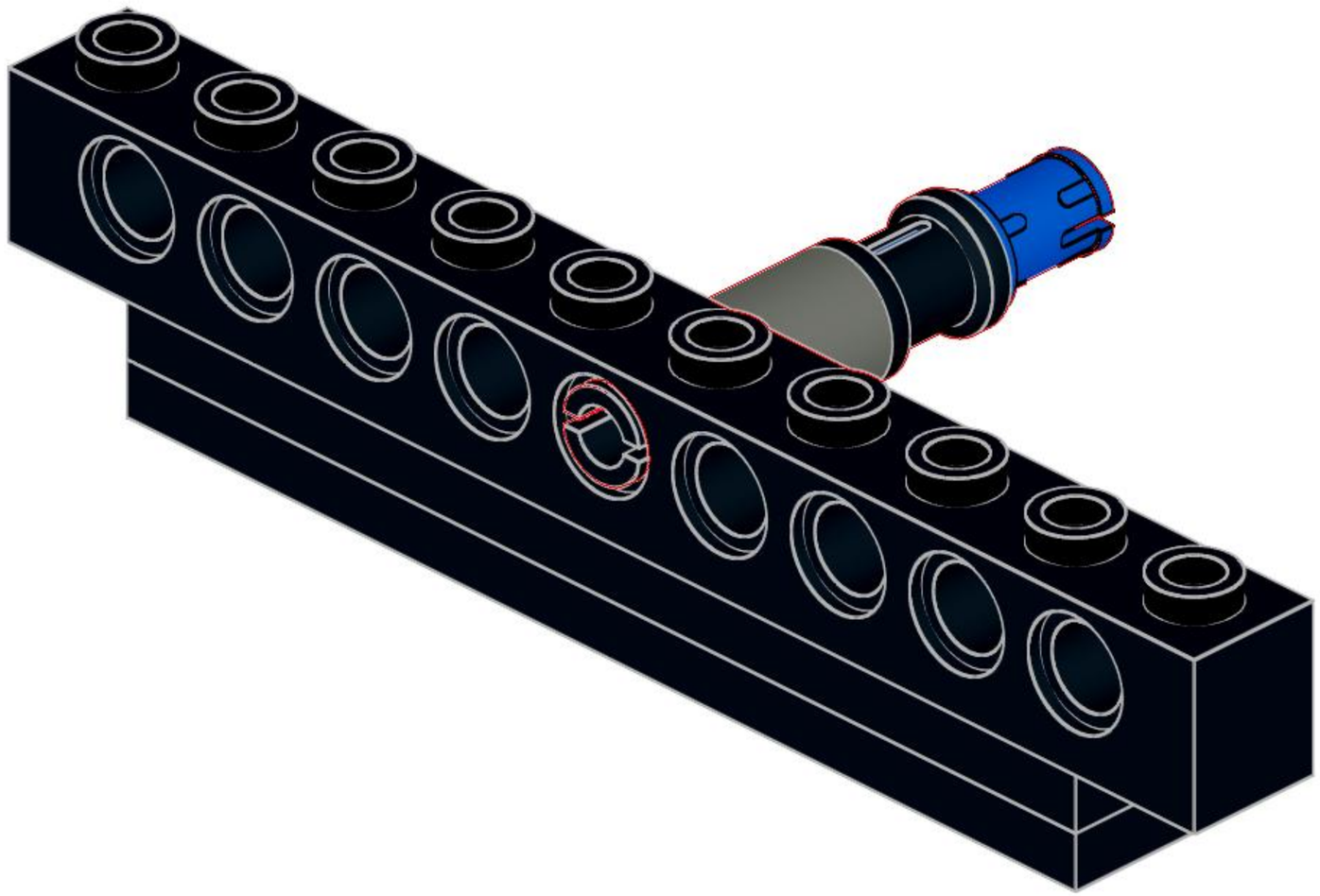

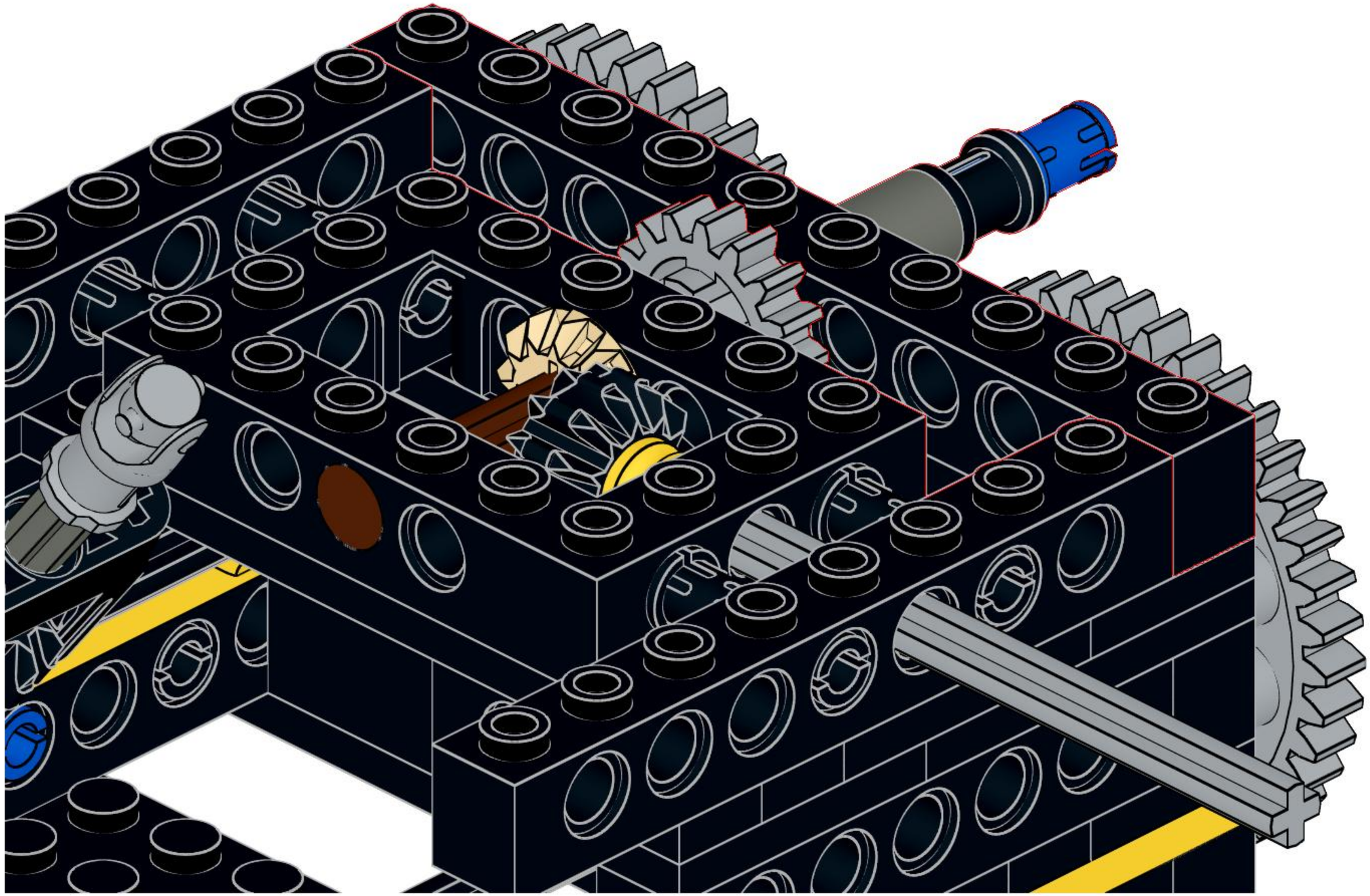

64

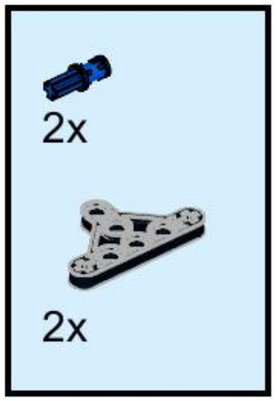

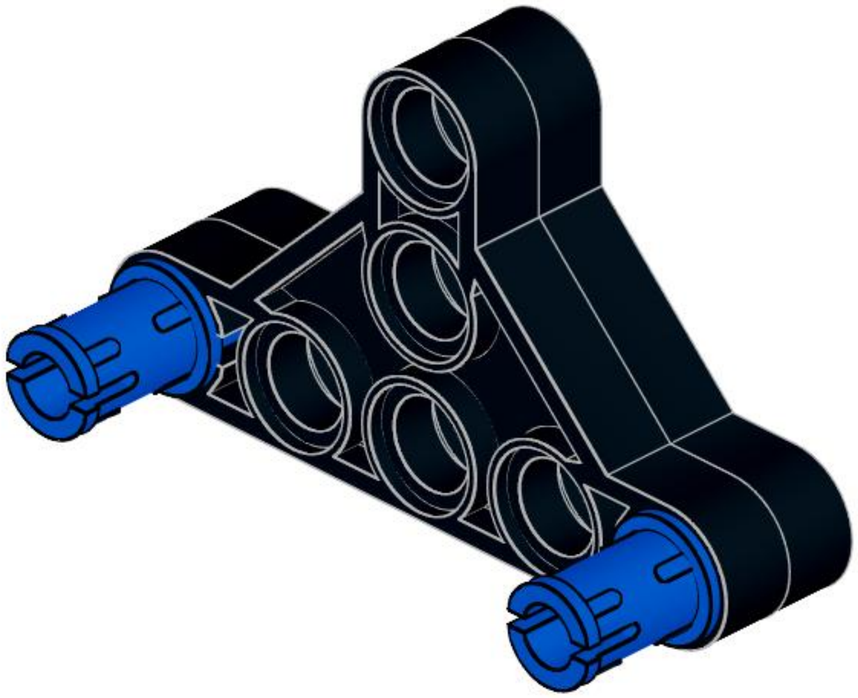

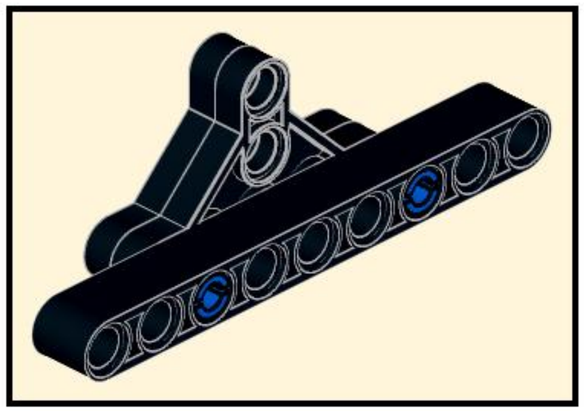

65

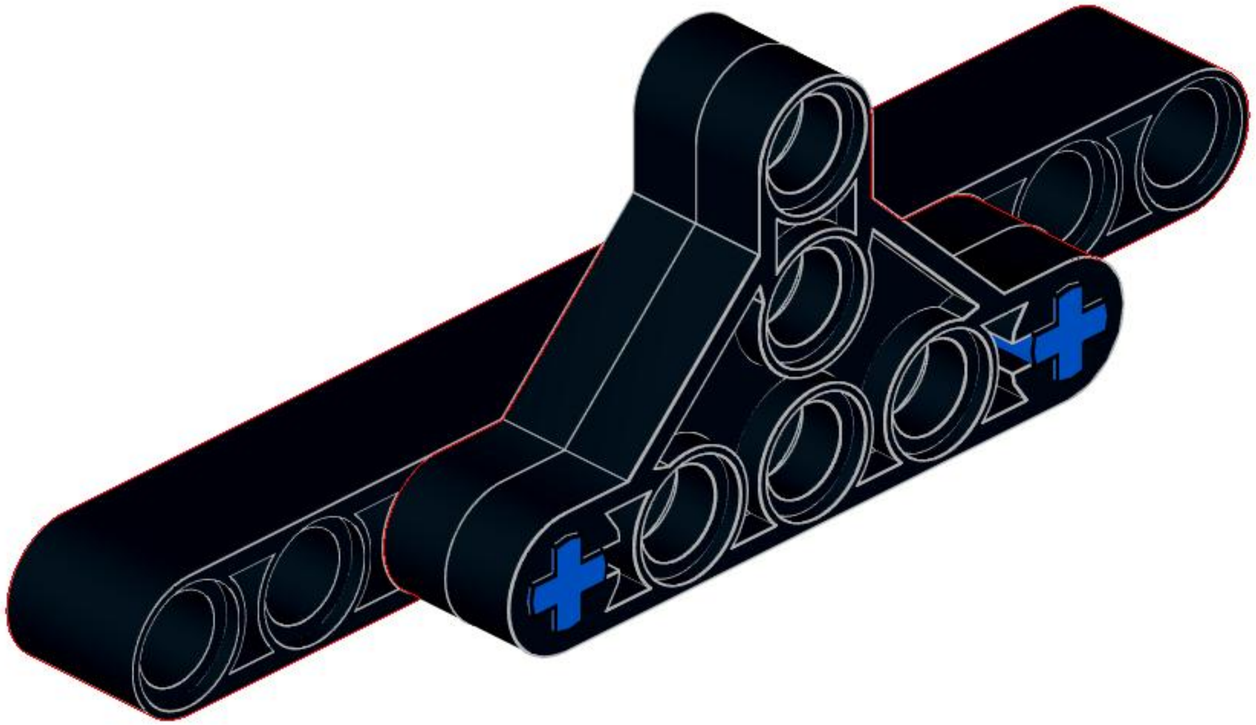

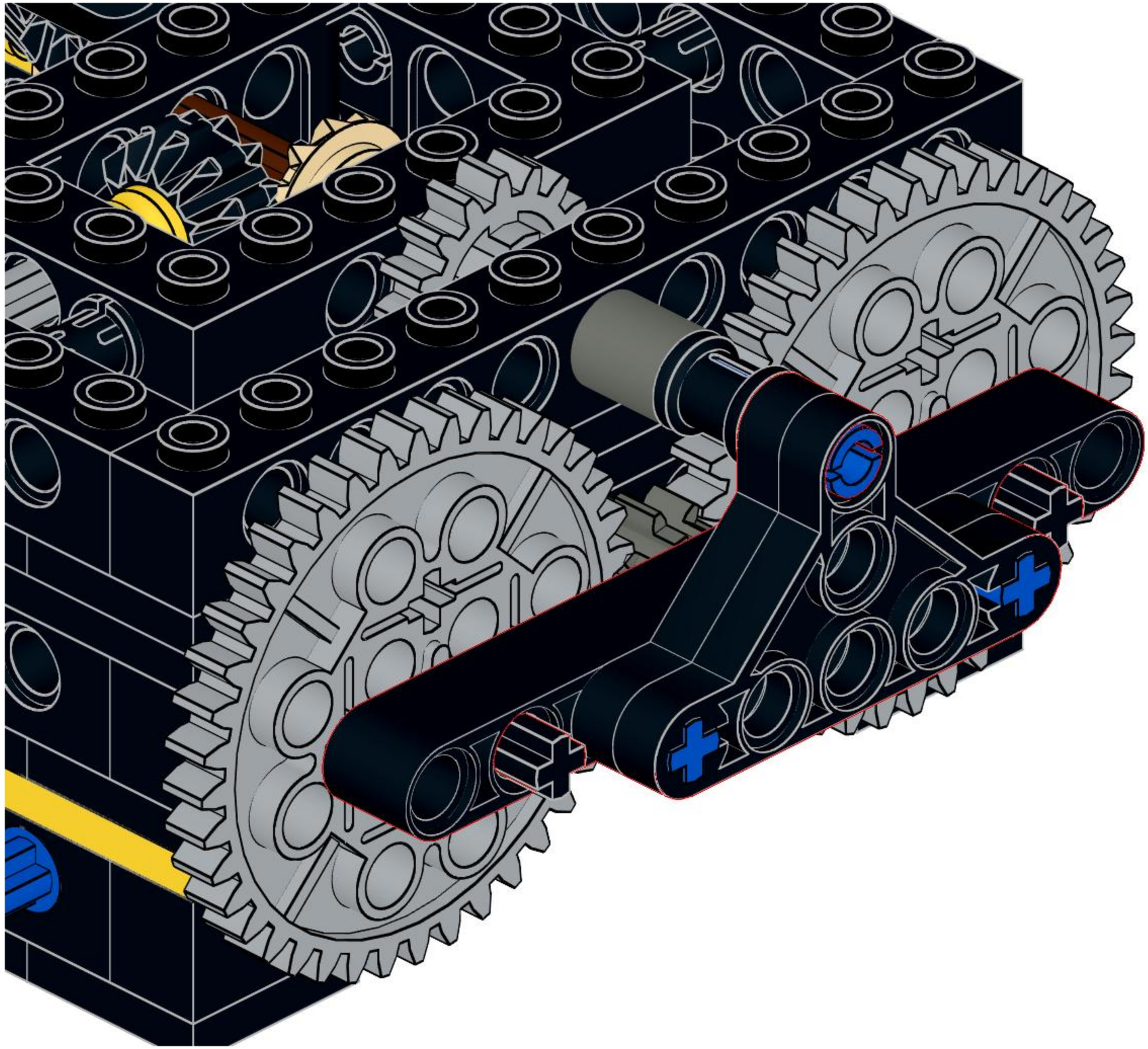

67

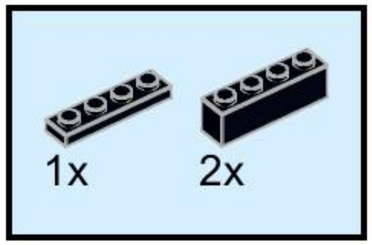

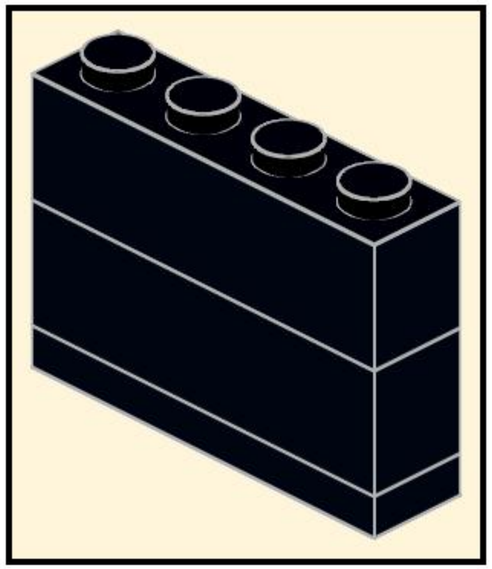

2x

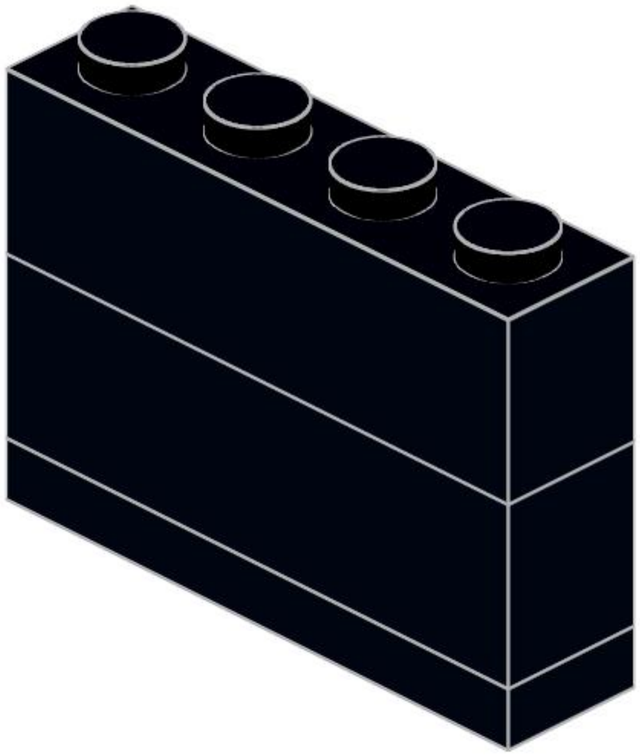

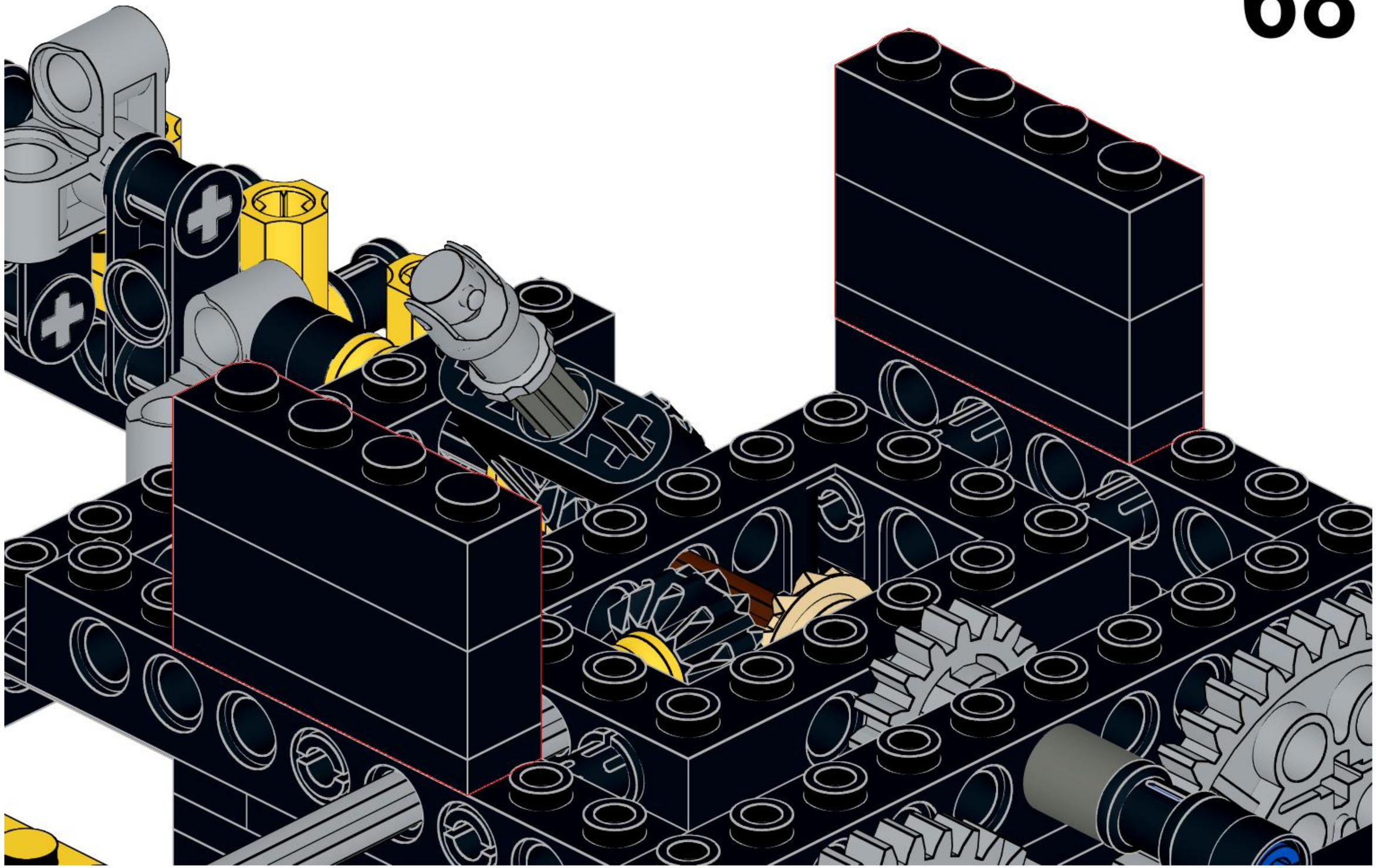

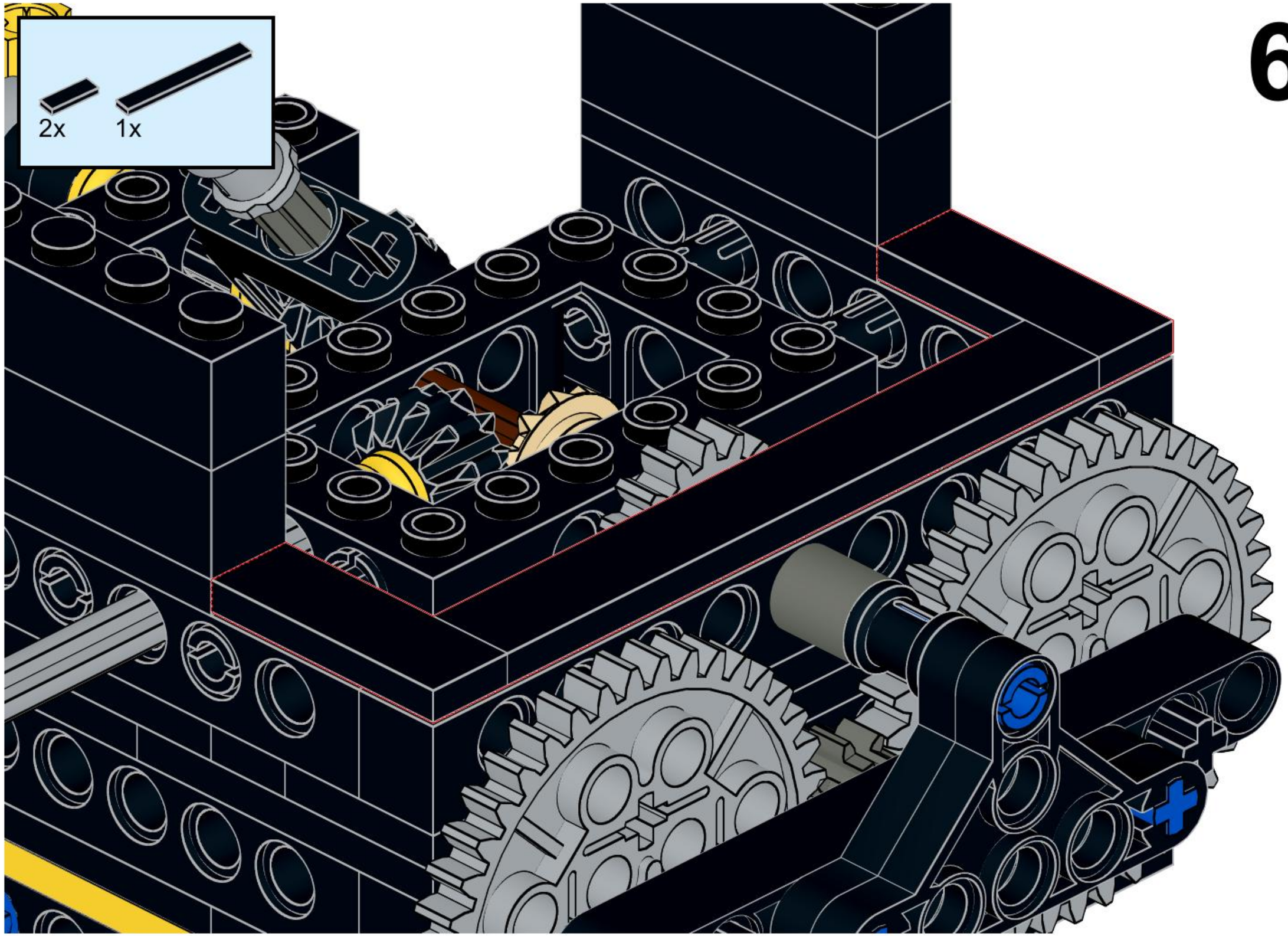
2x
1x

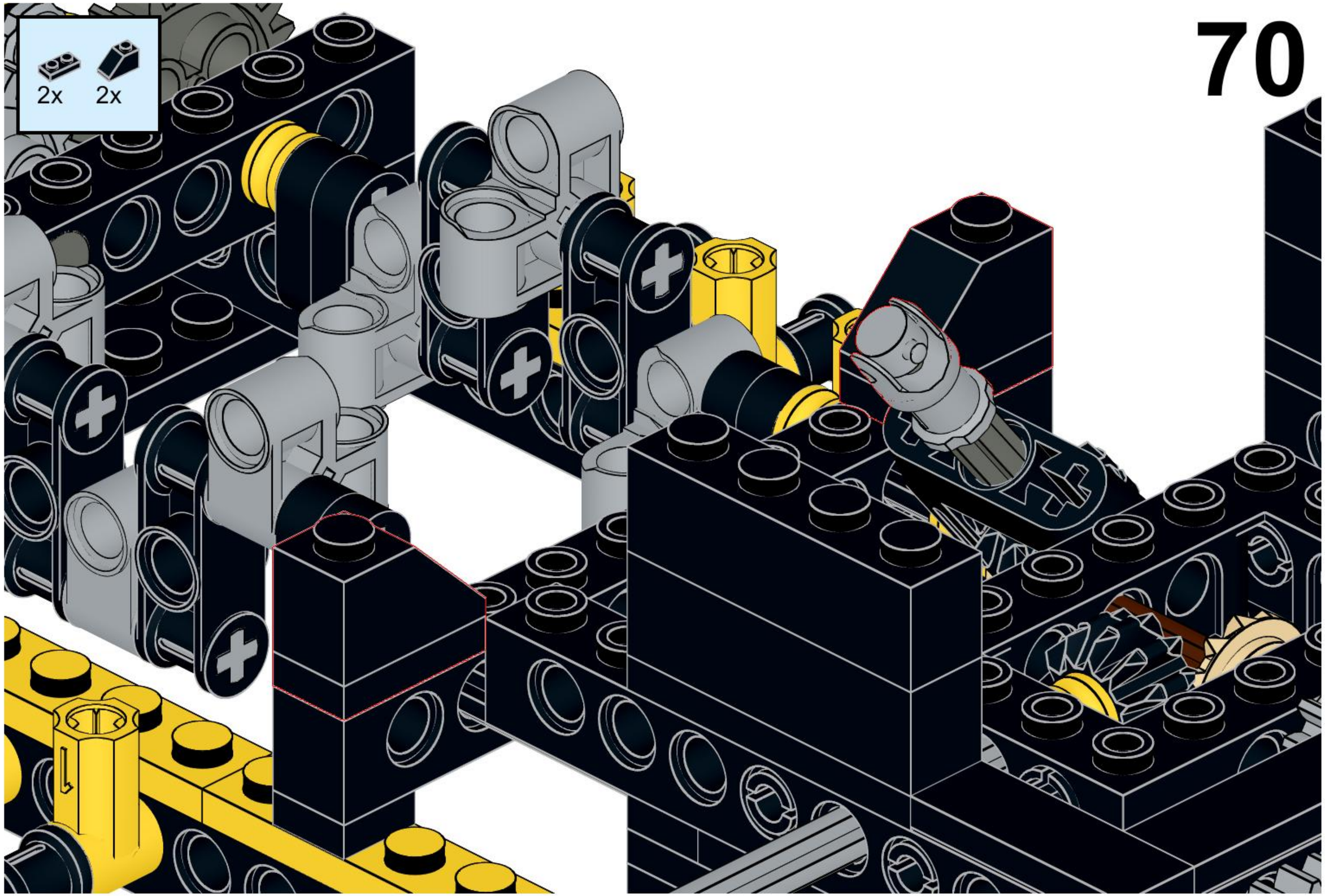
2x
2x
70

71

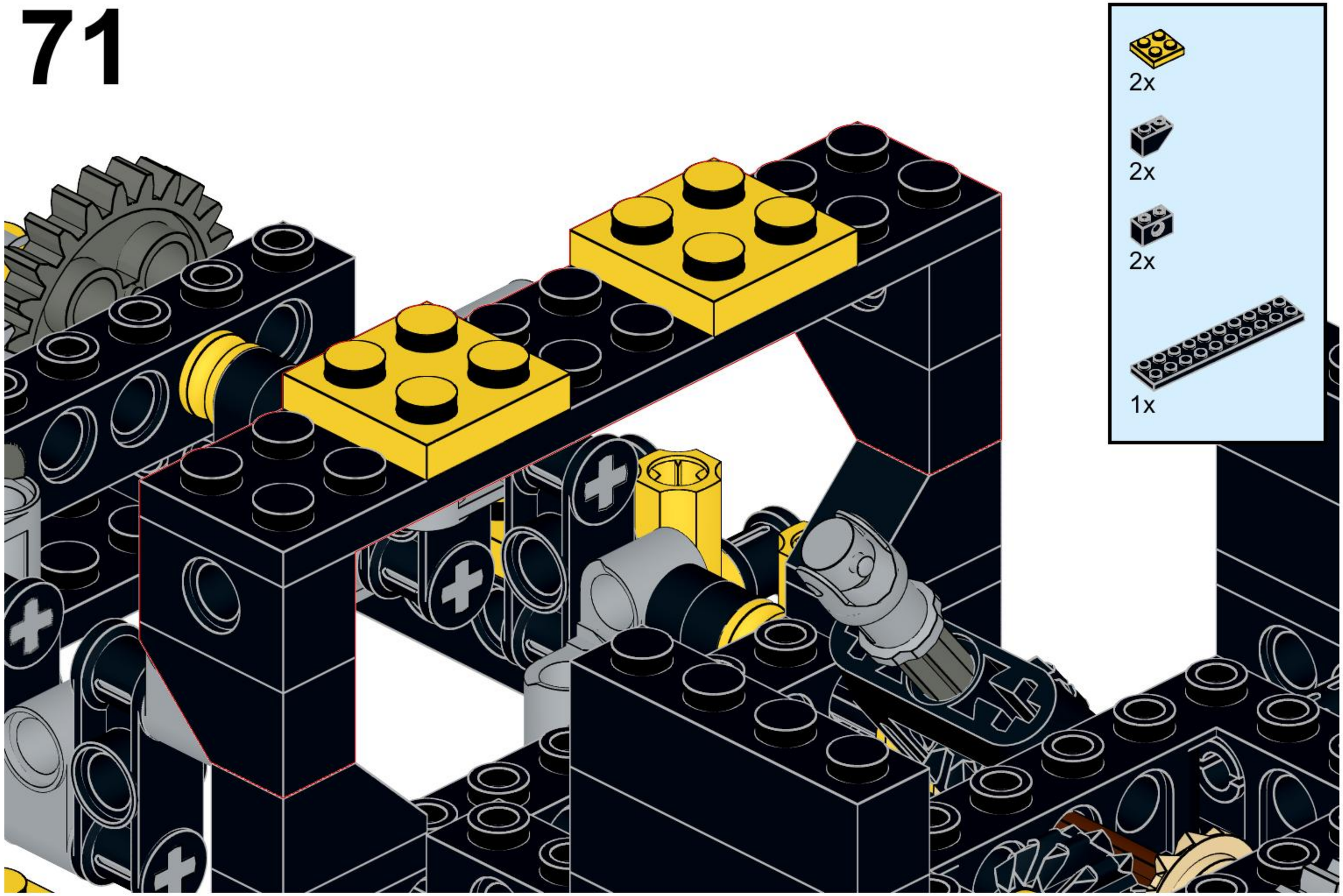

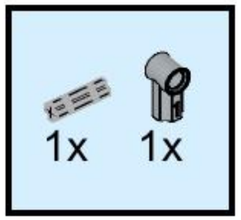

72

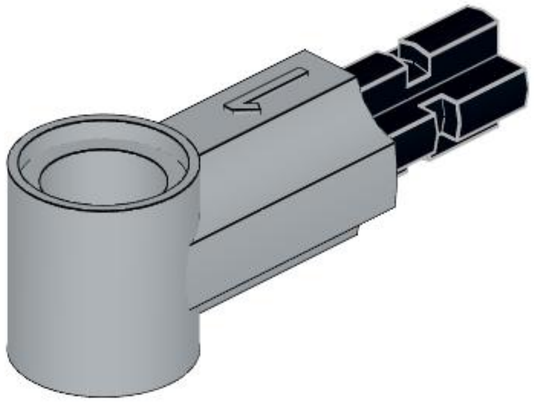

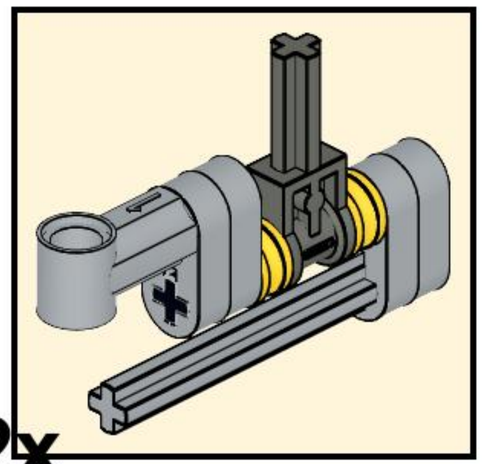

2x

73

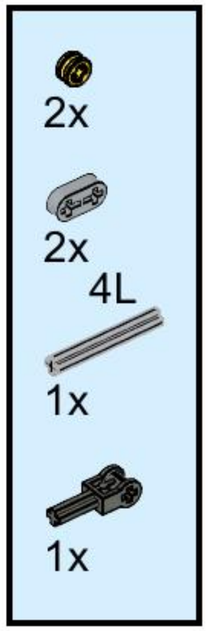

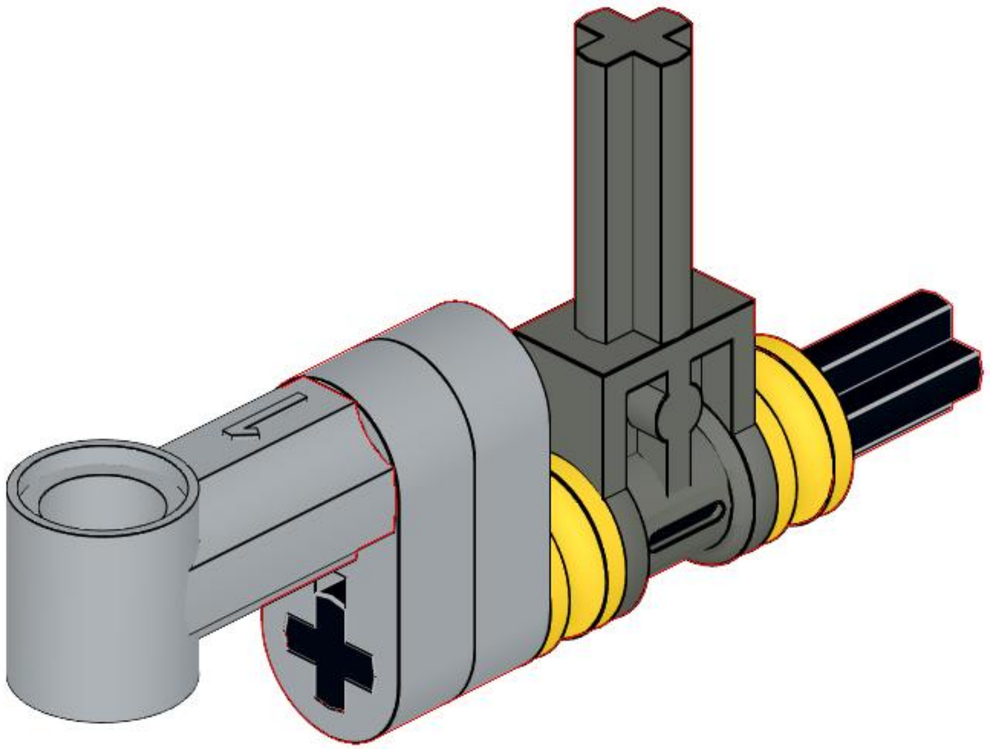

74

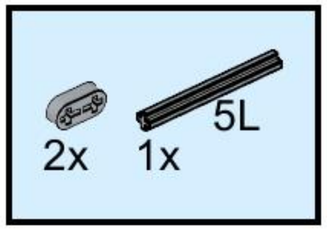

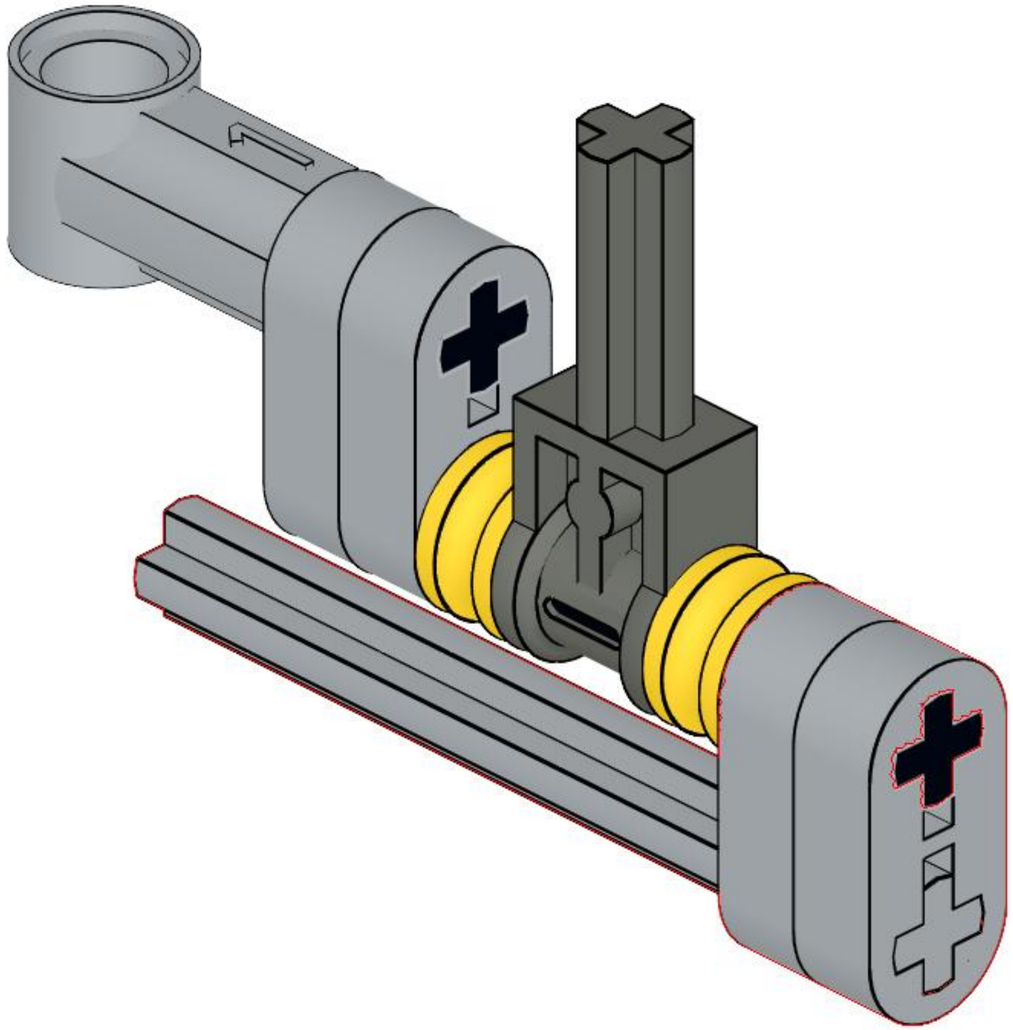

75

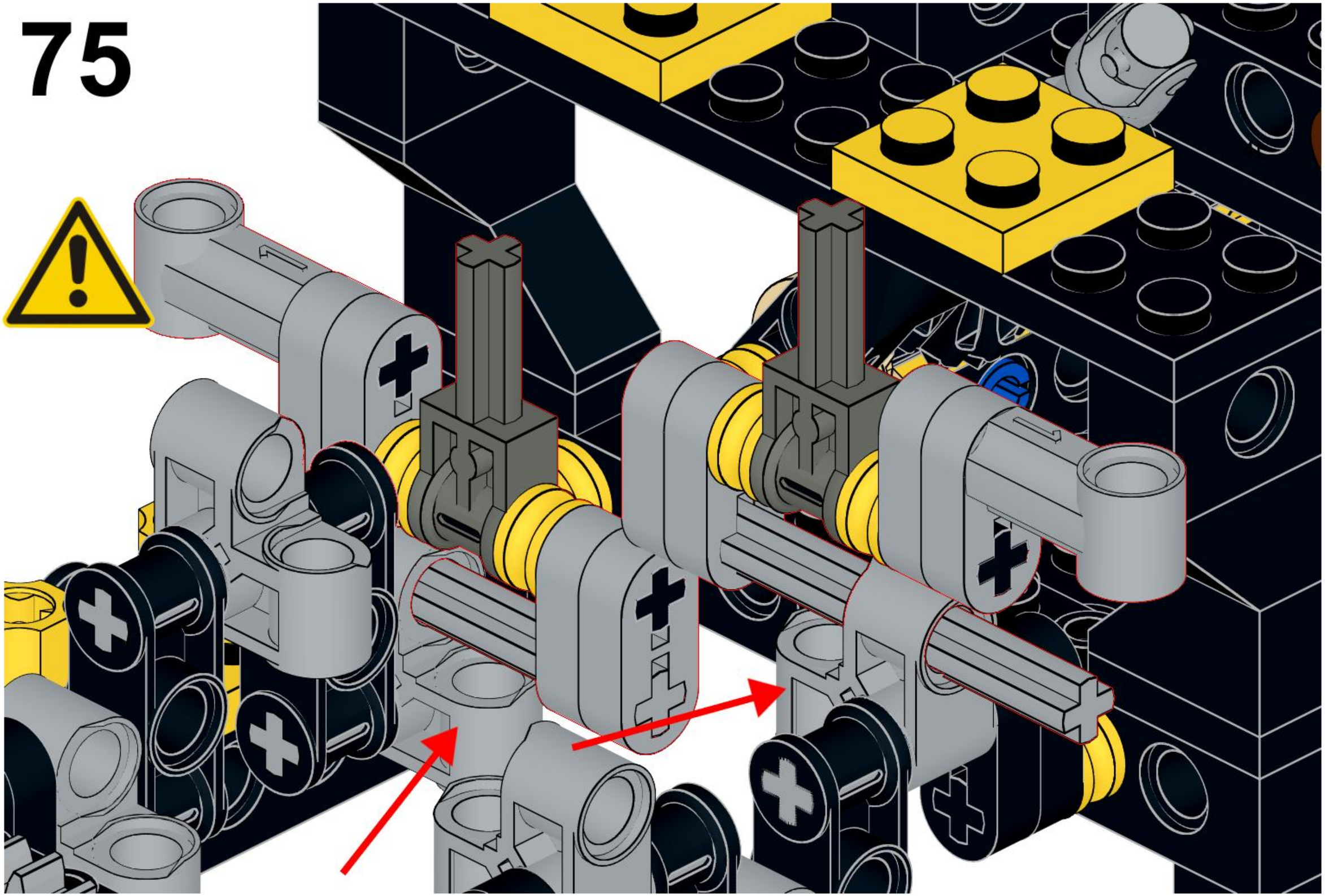

76

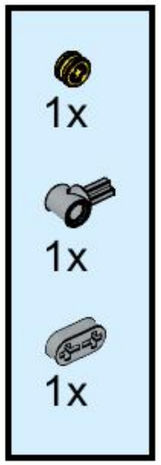

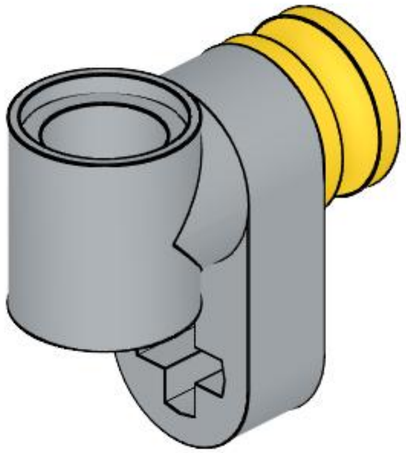

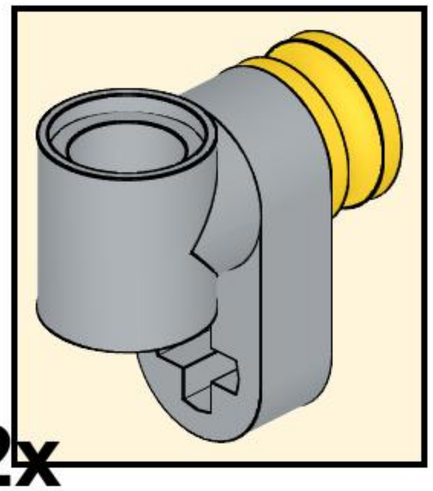

2x

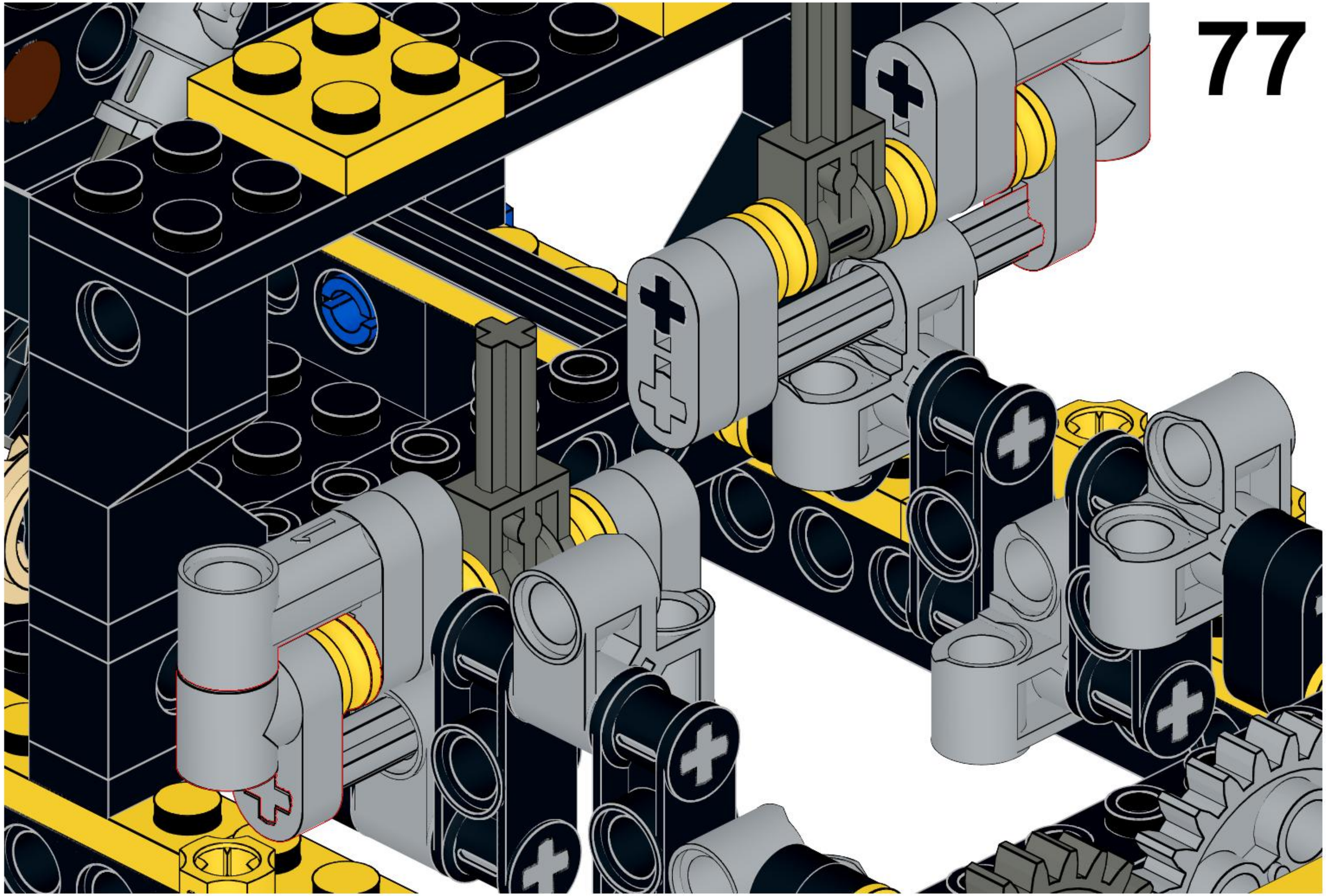

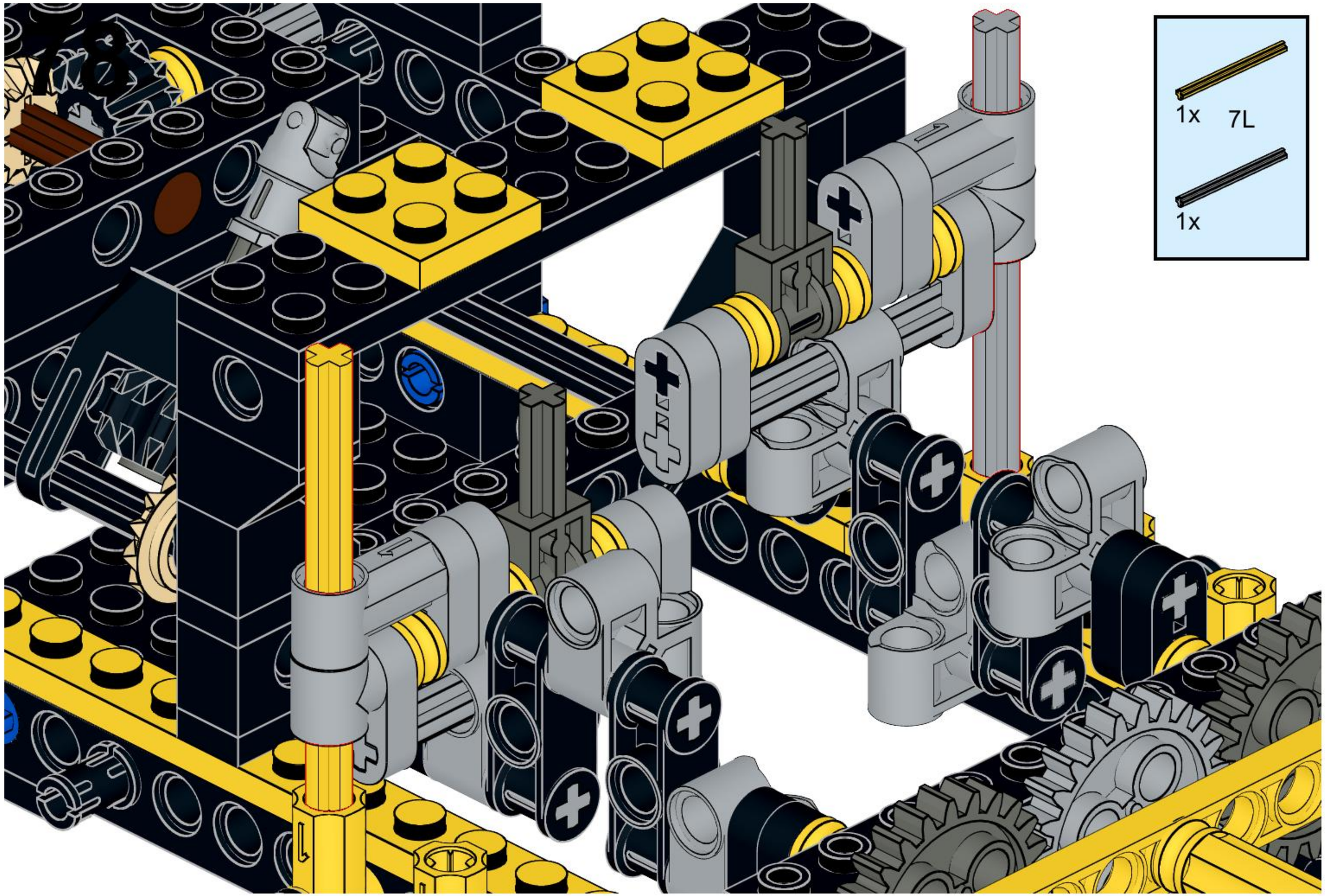

Ensure the mechanism rotates freely.

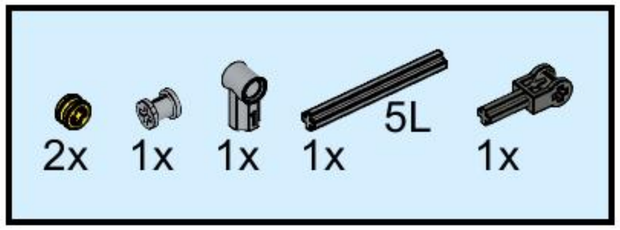

79

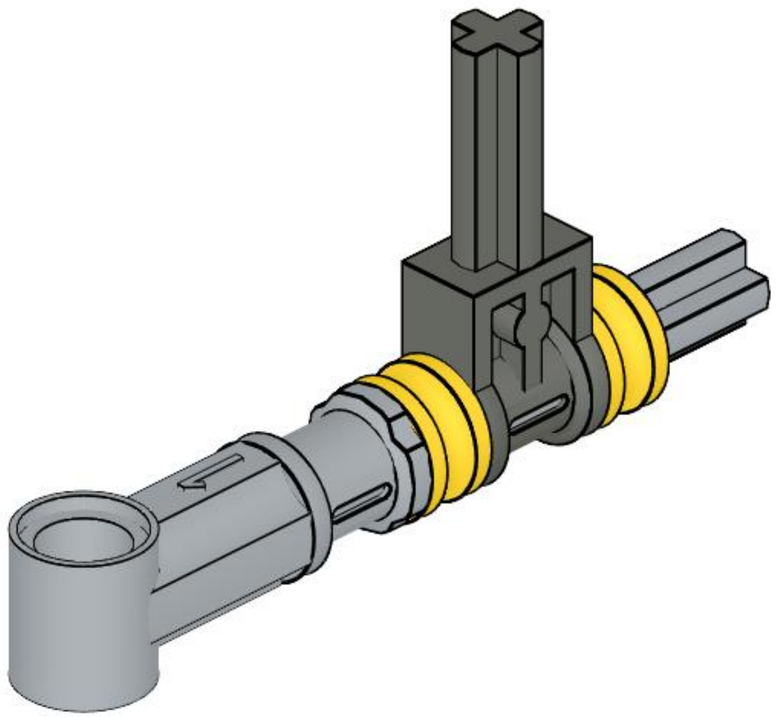

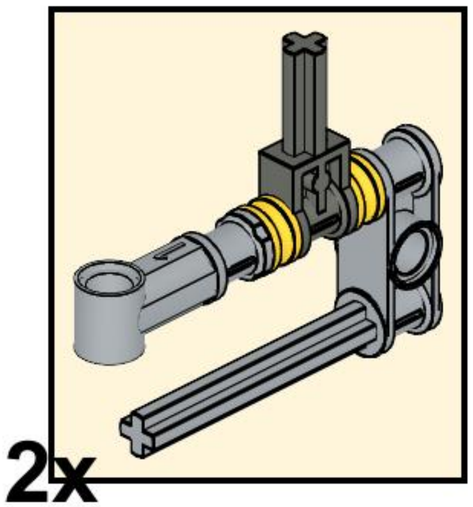

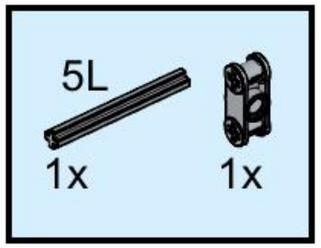

80

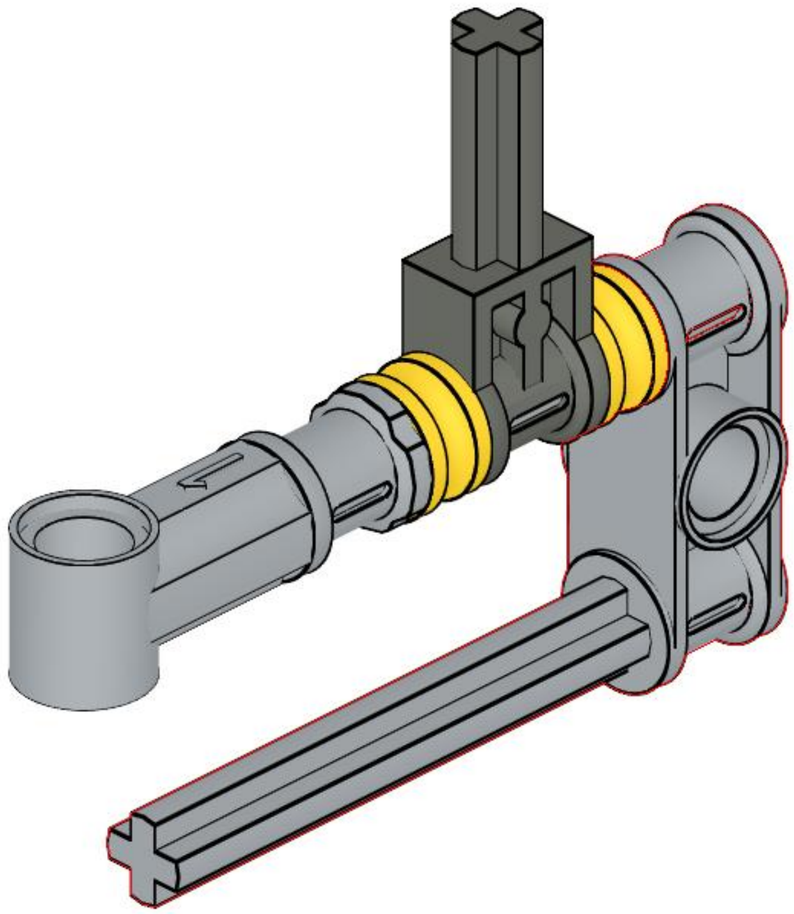

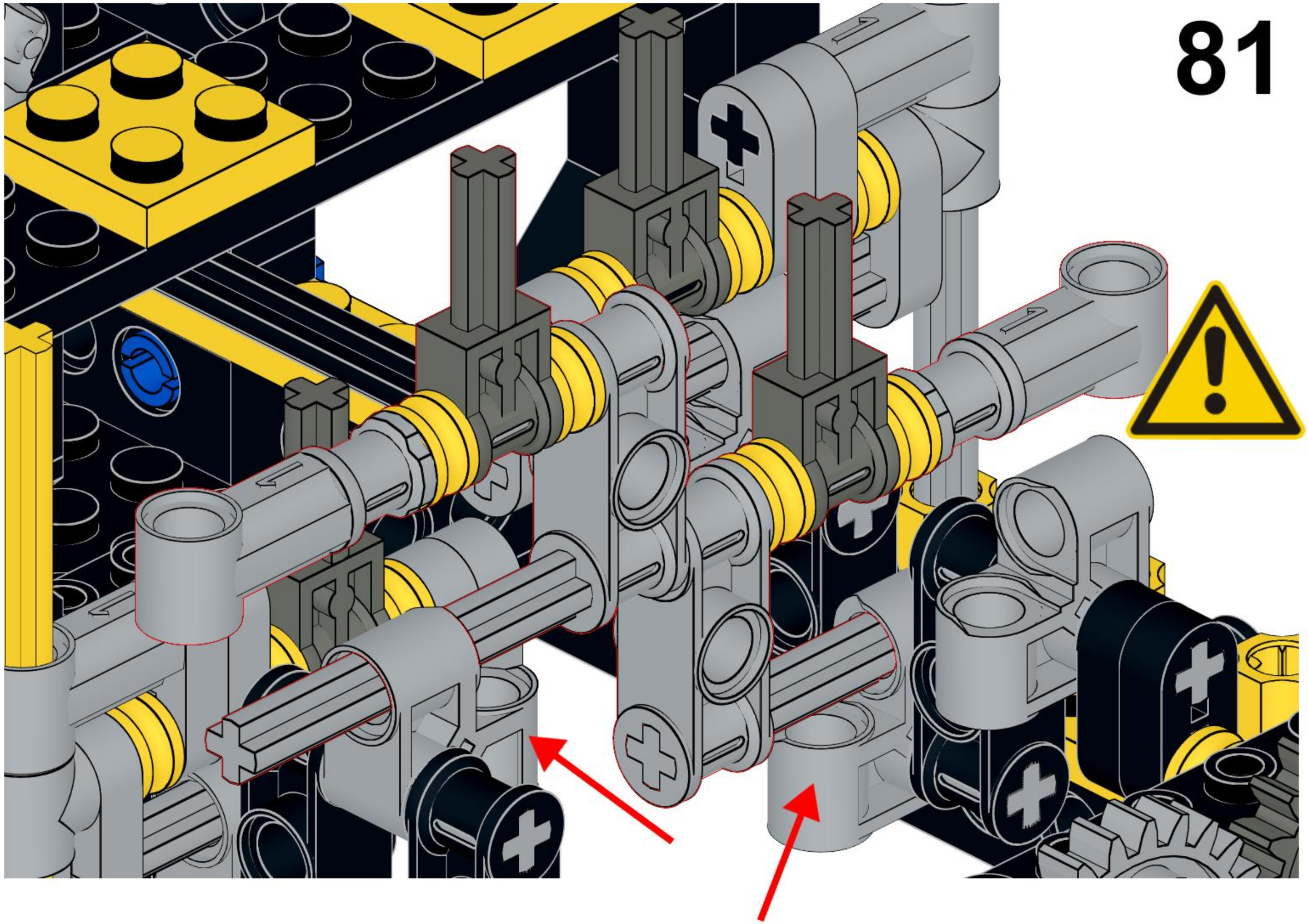

82

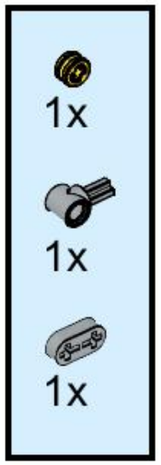

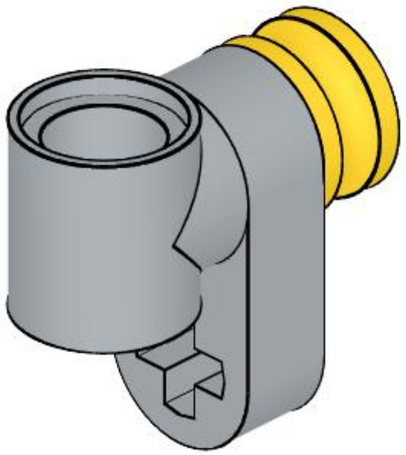

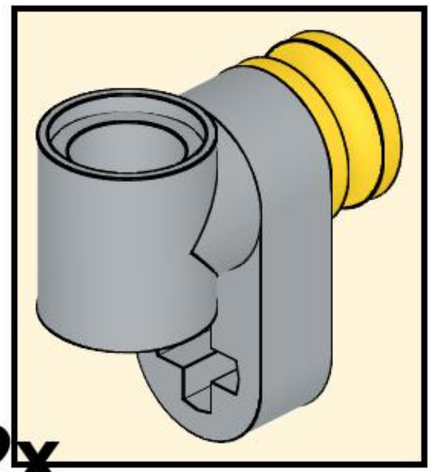

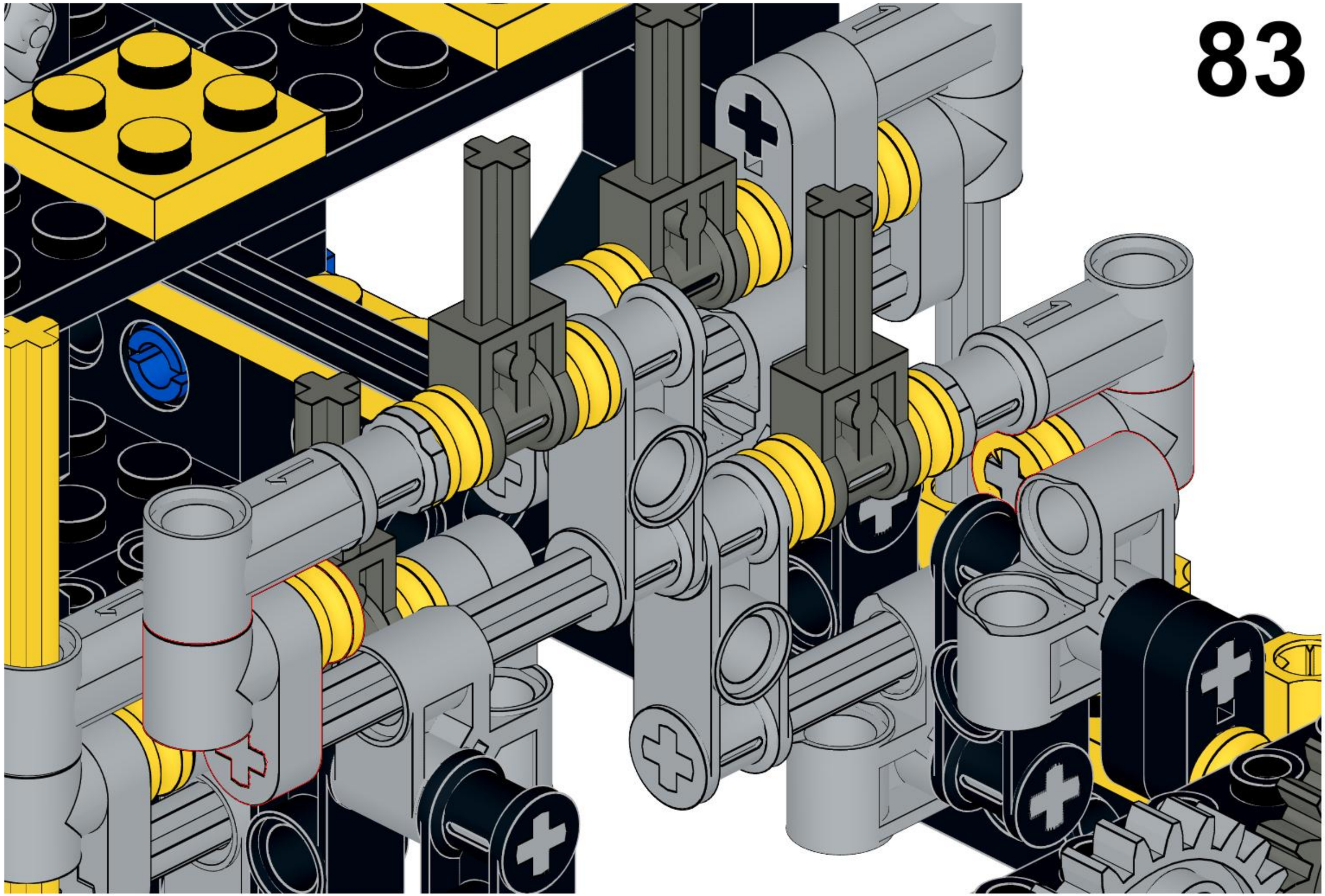

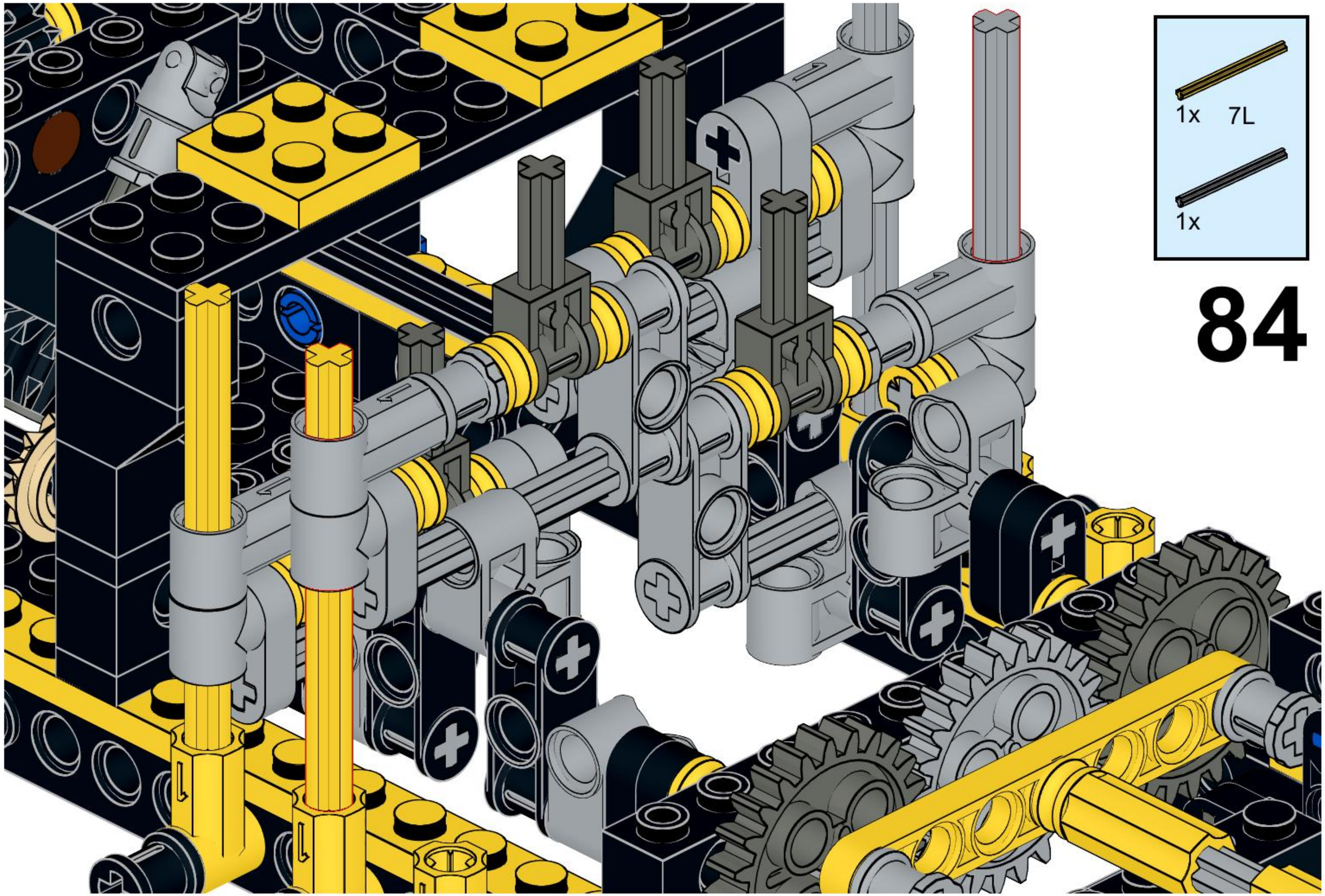

Ensure the mechanism rotates freely.

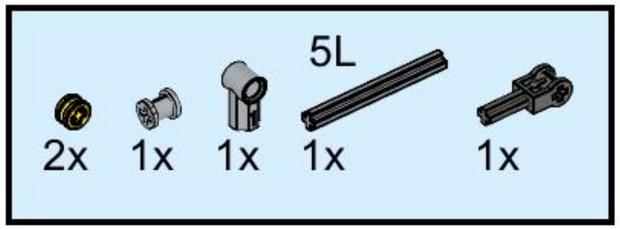

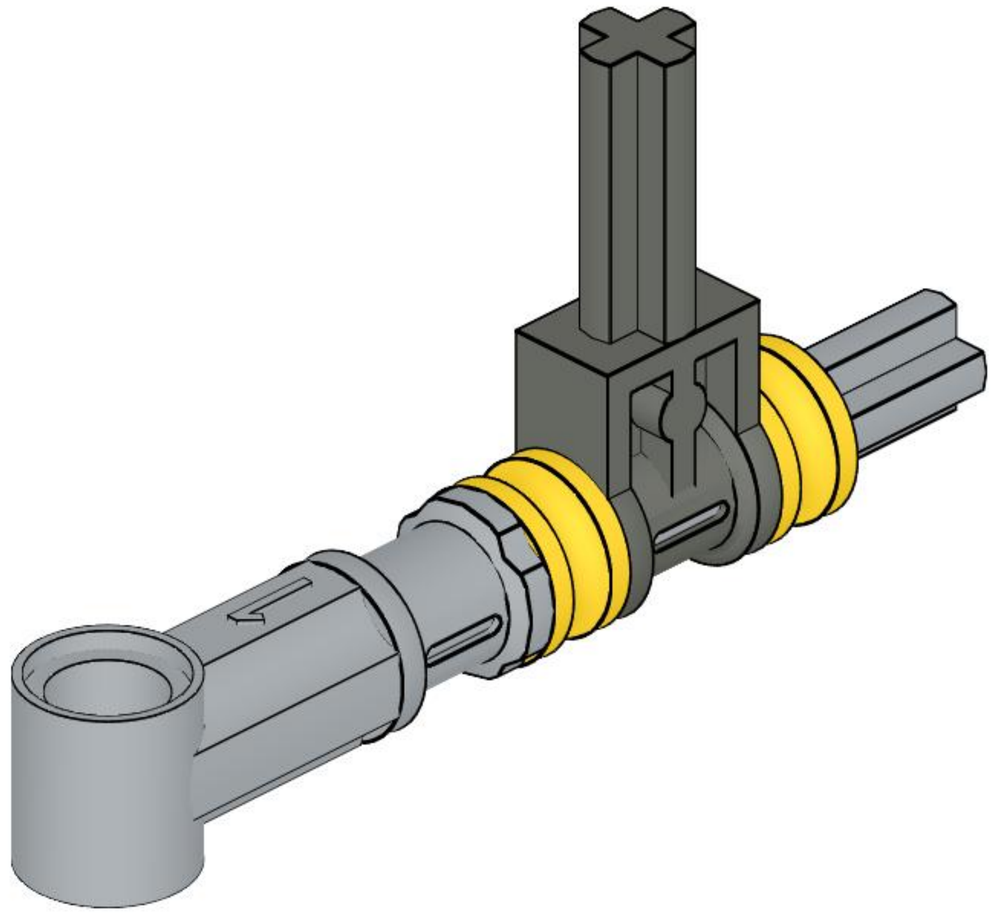

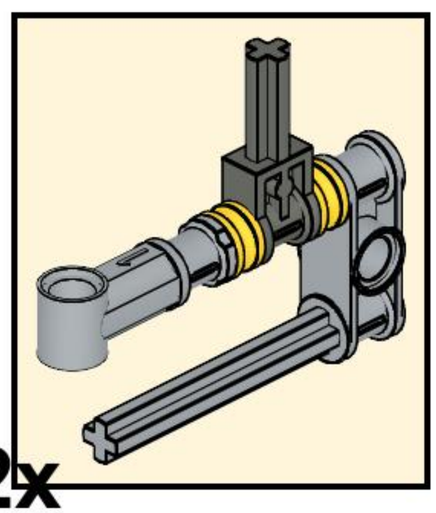

2x

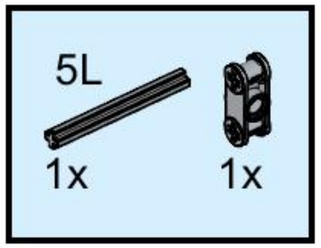

86

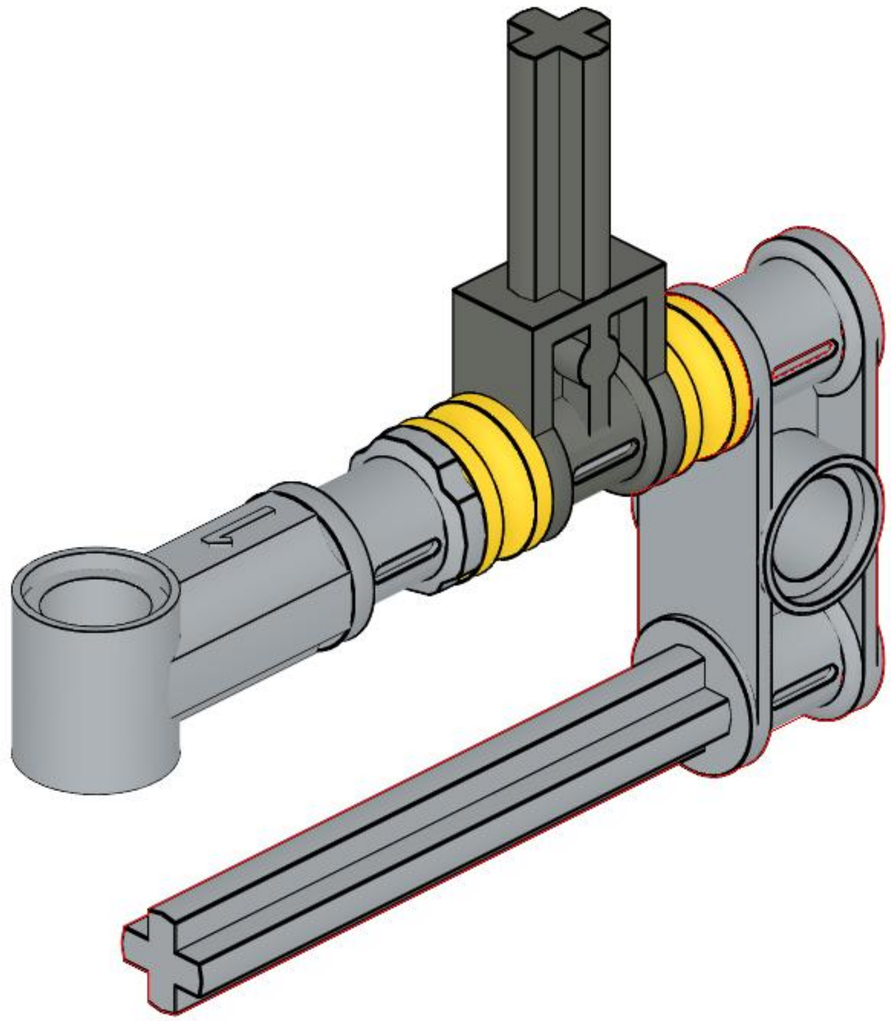

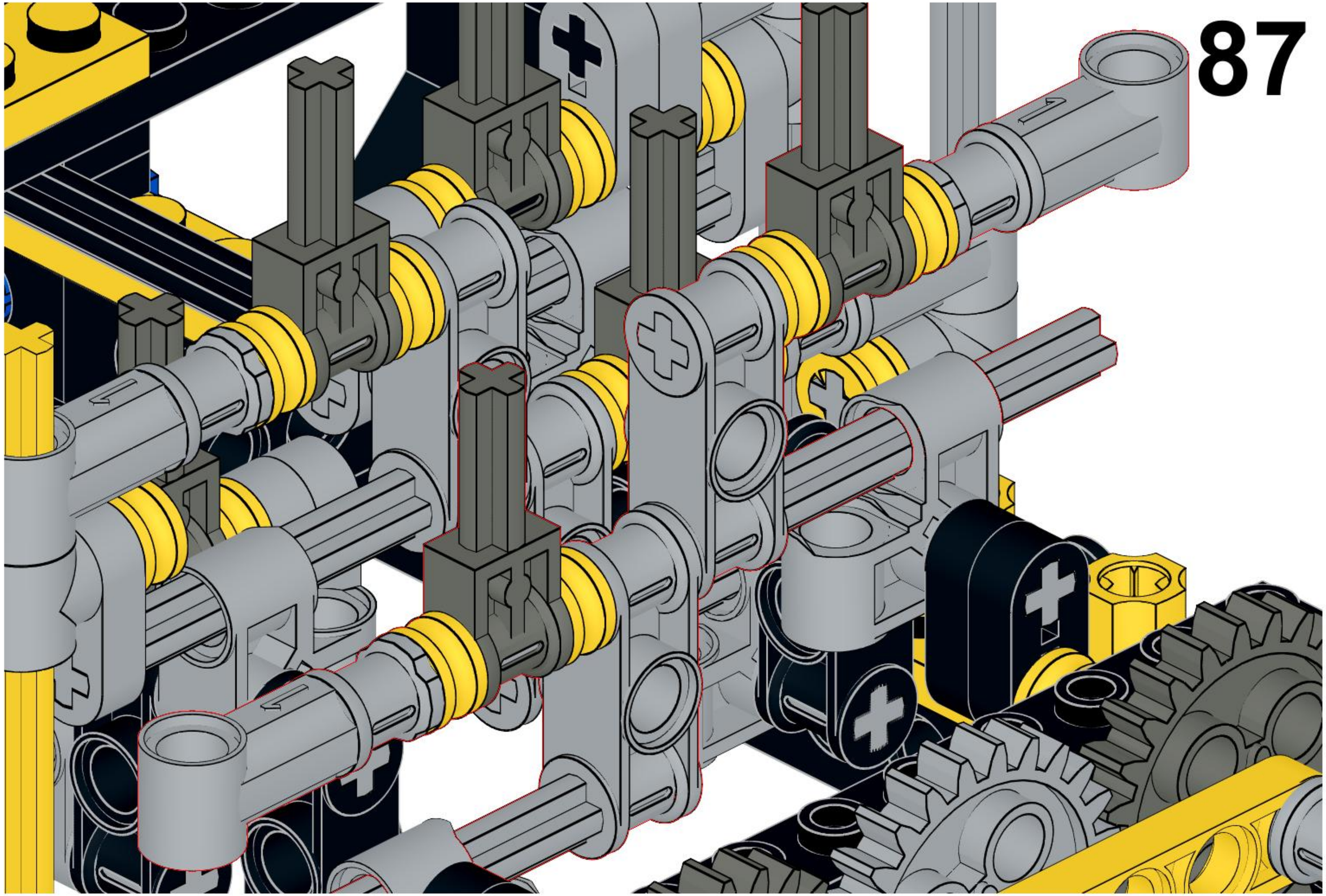

88

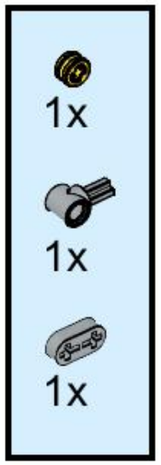

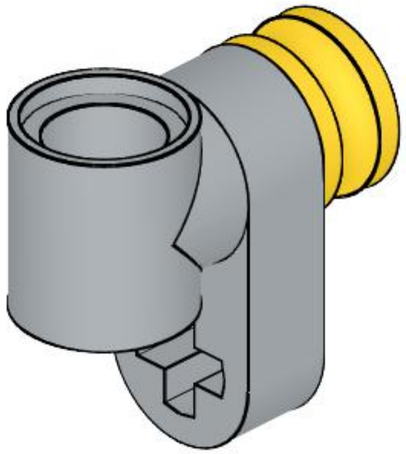

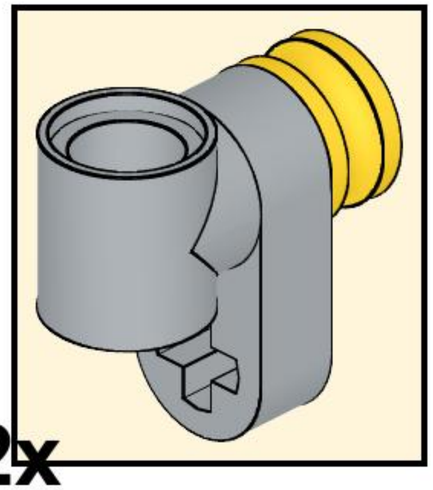

2x

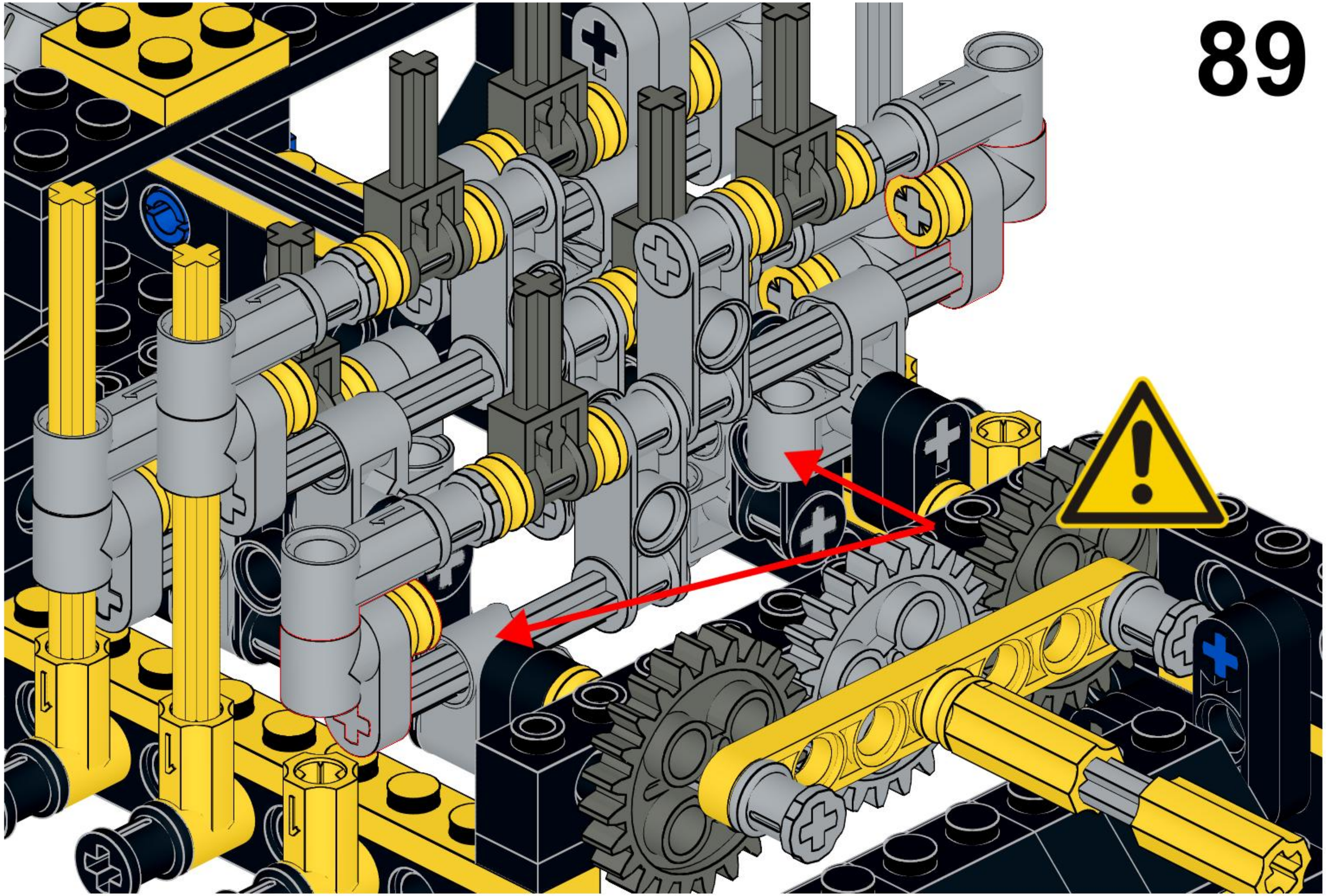

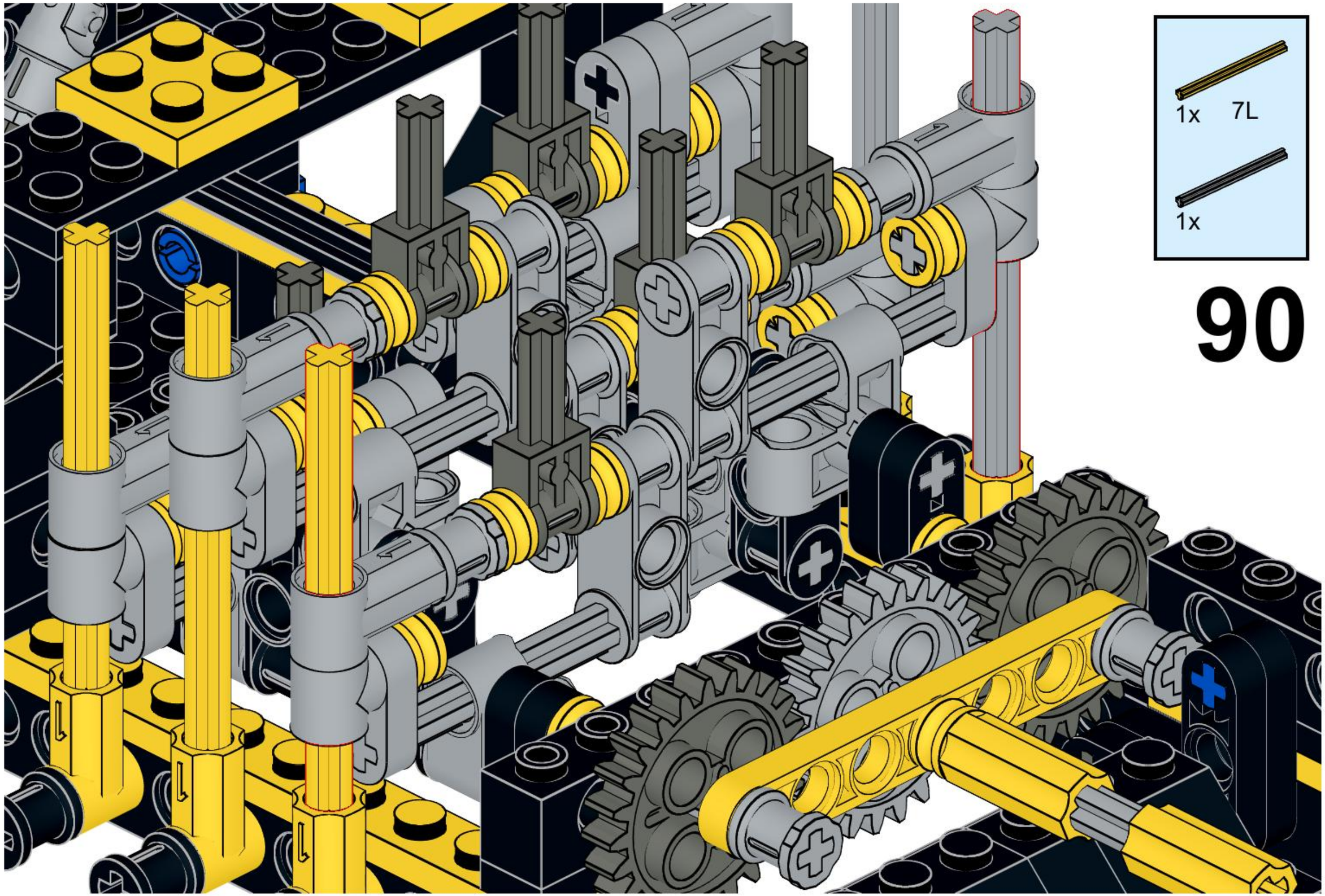

90

Ensure the mechanism rotates freely.

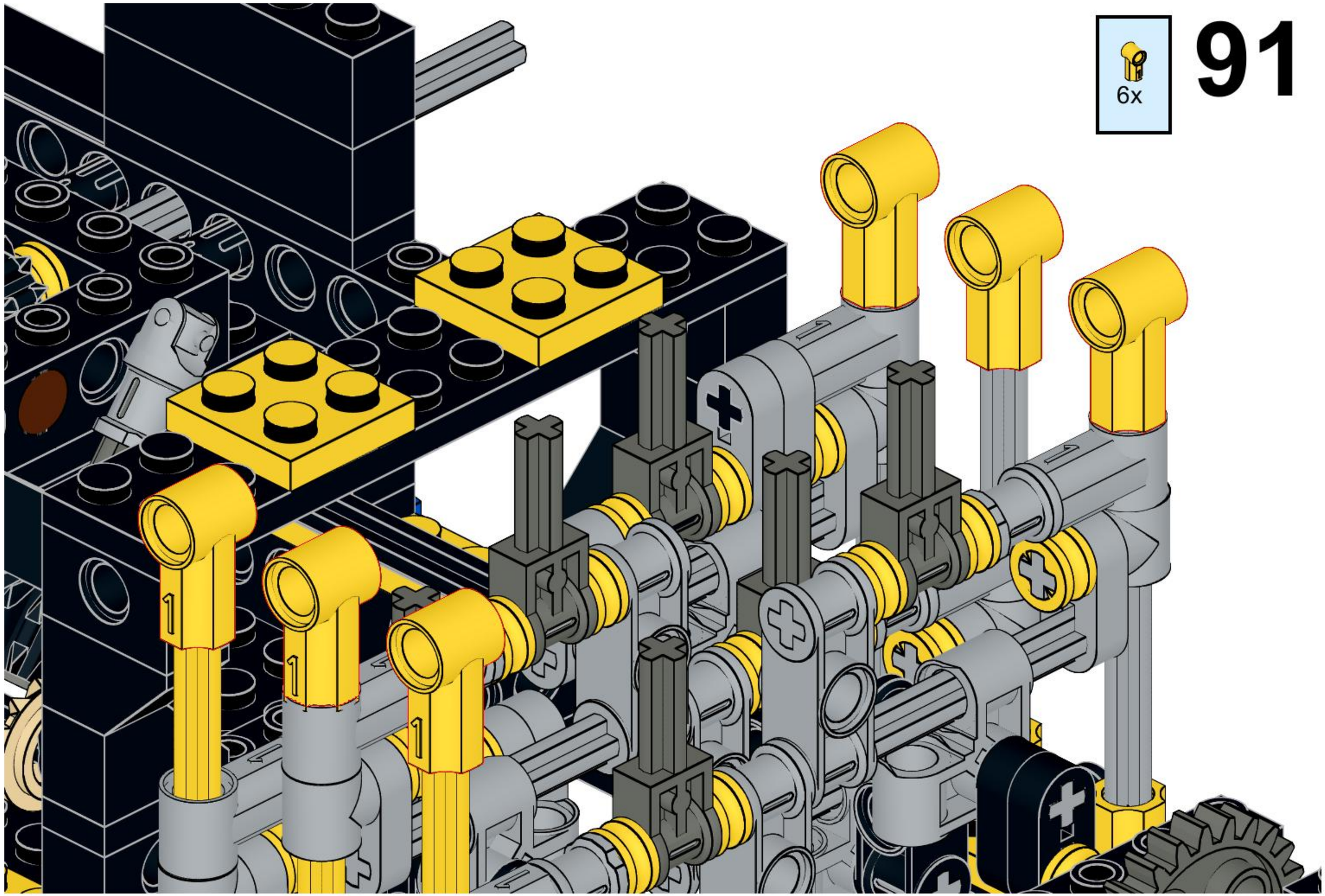
6x

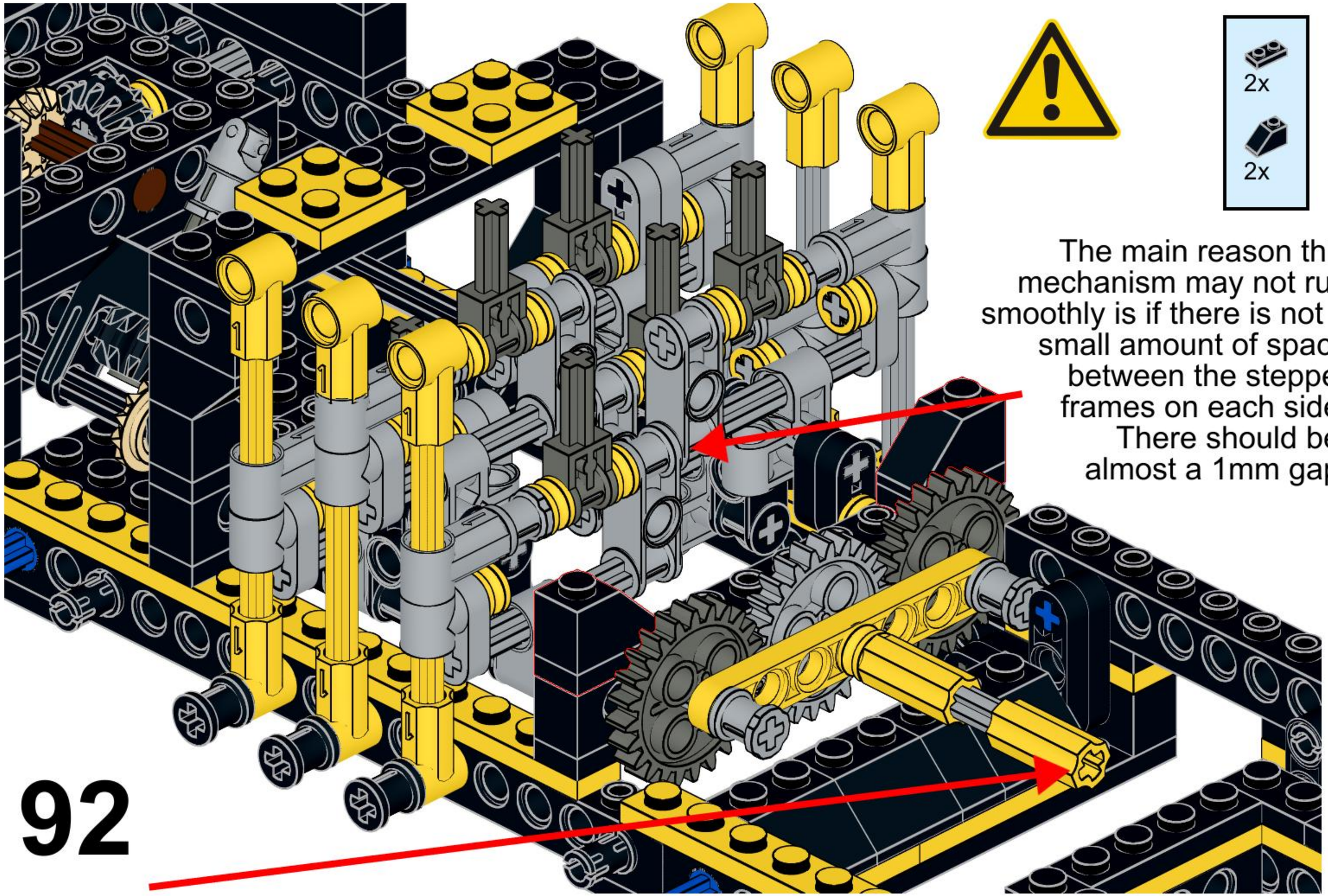

Hand-crank the mechanism to ensure everything is moving freely. Wiggle & re-align until resolved.

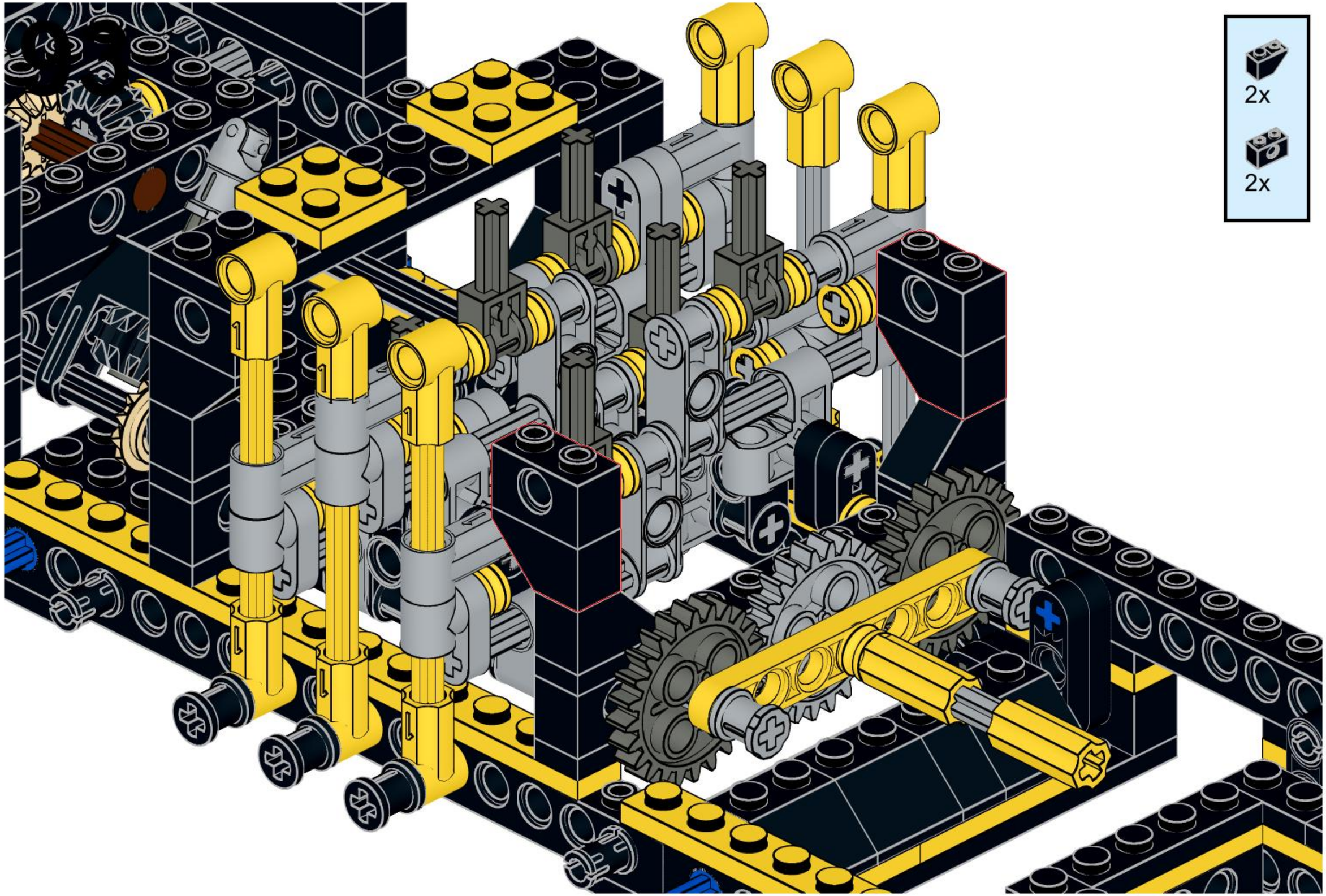

2x

2x

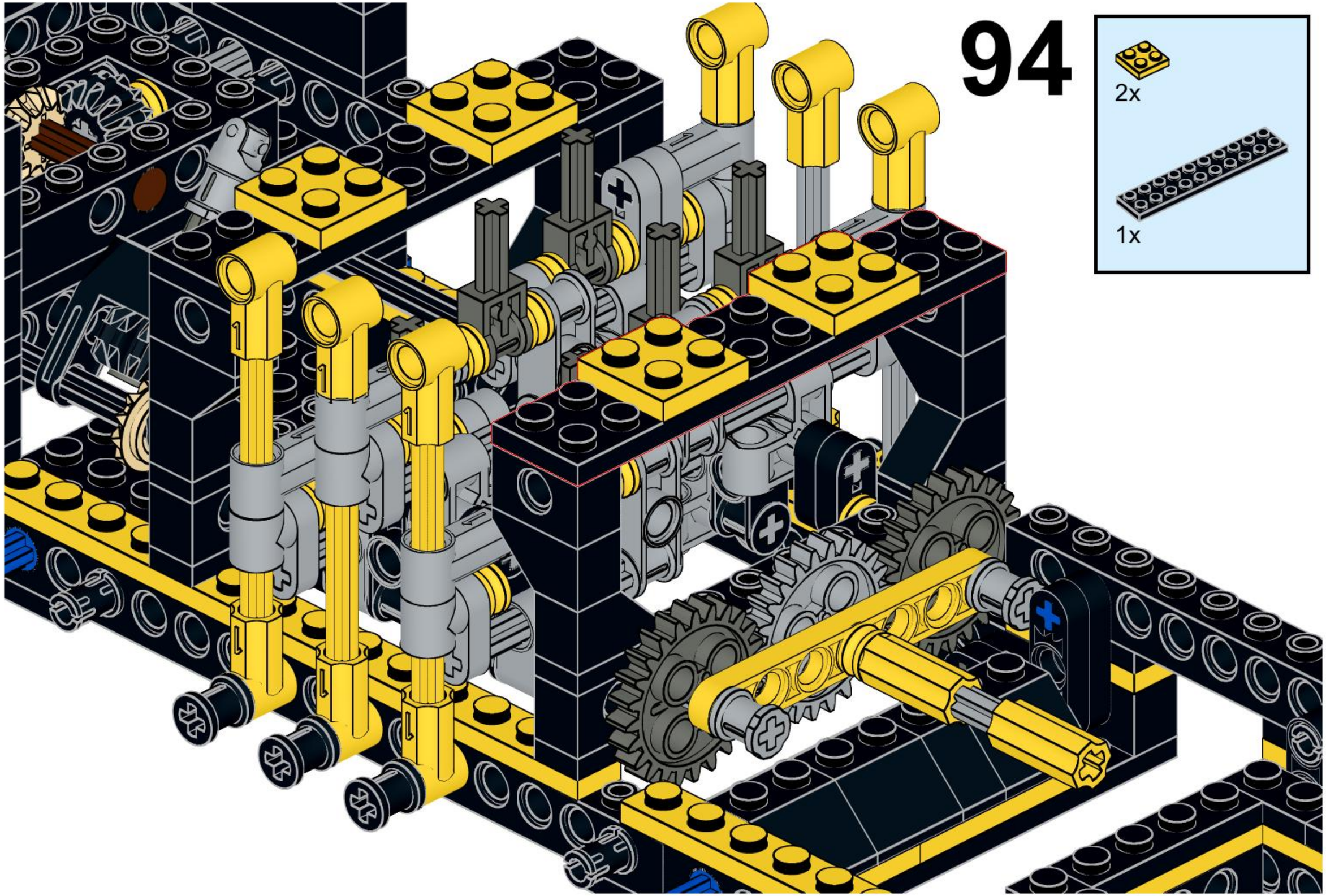
94
2x
1x

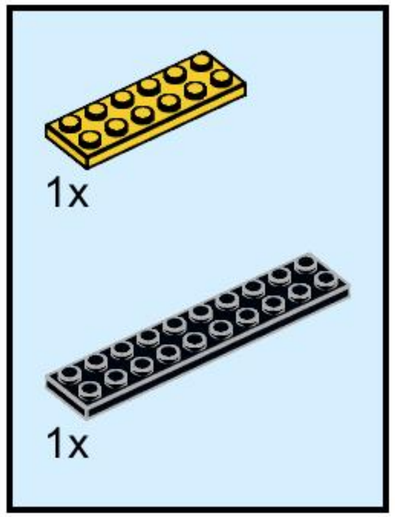
1x
1x

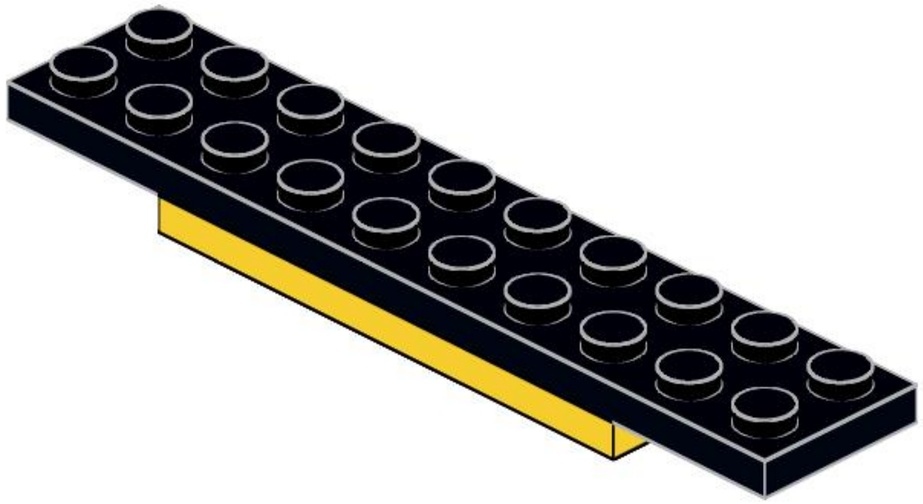

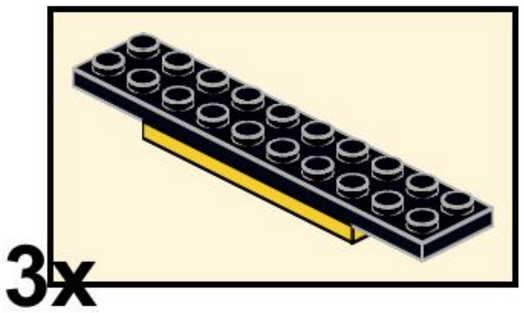
3x

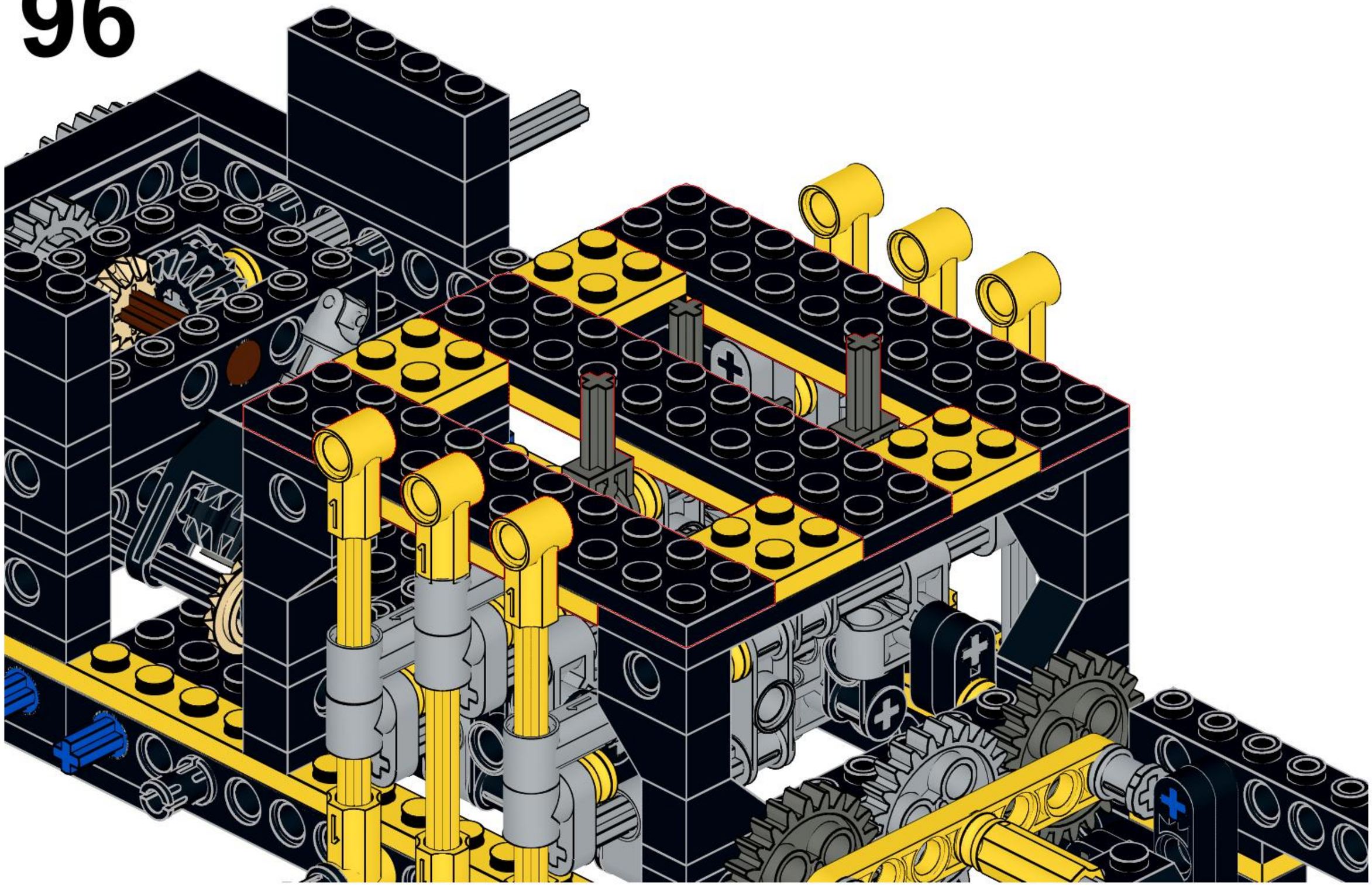

97

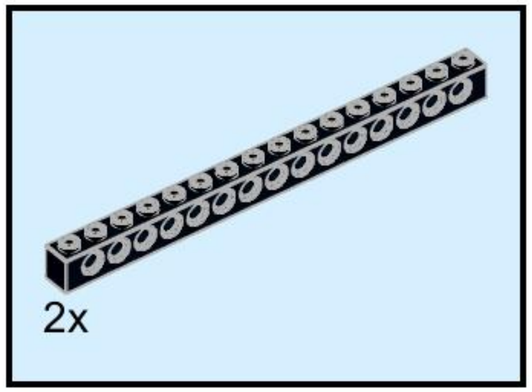

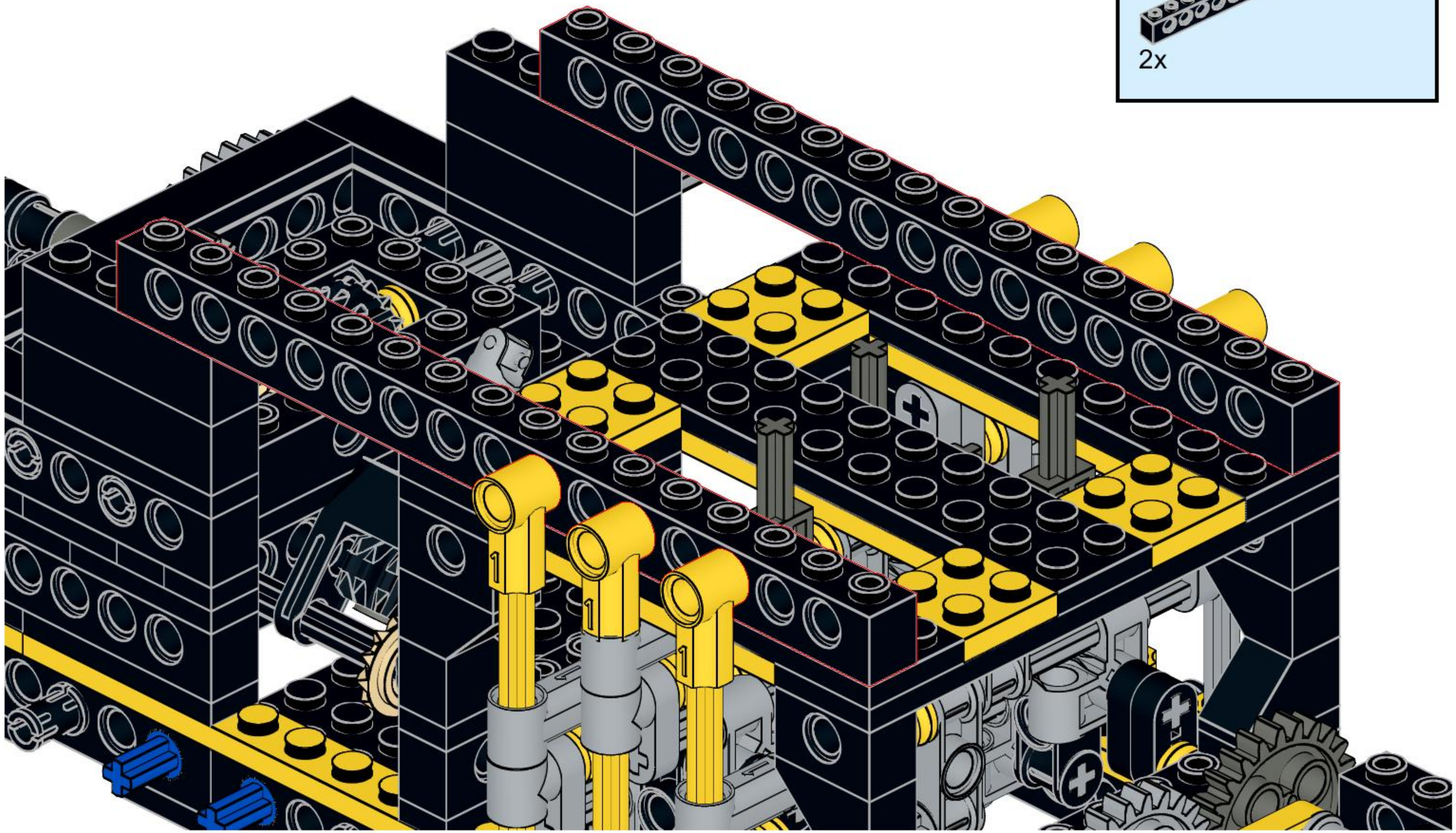

98

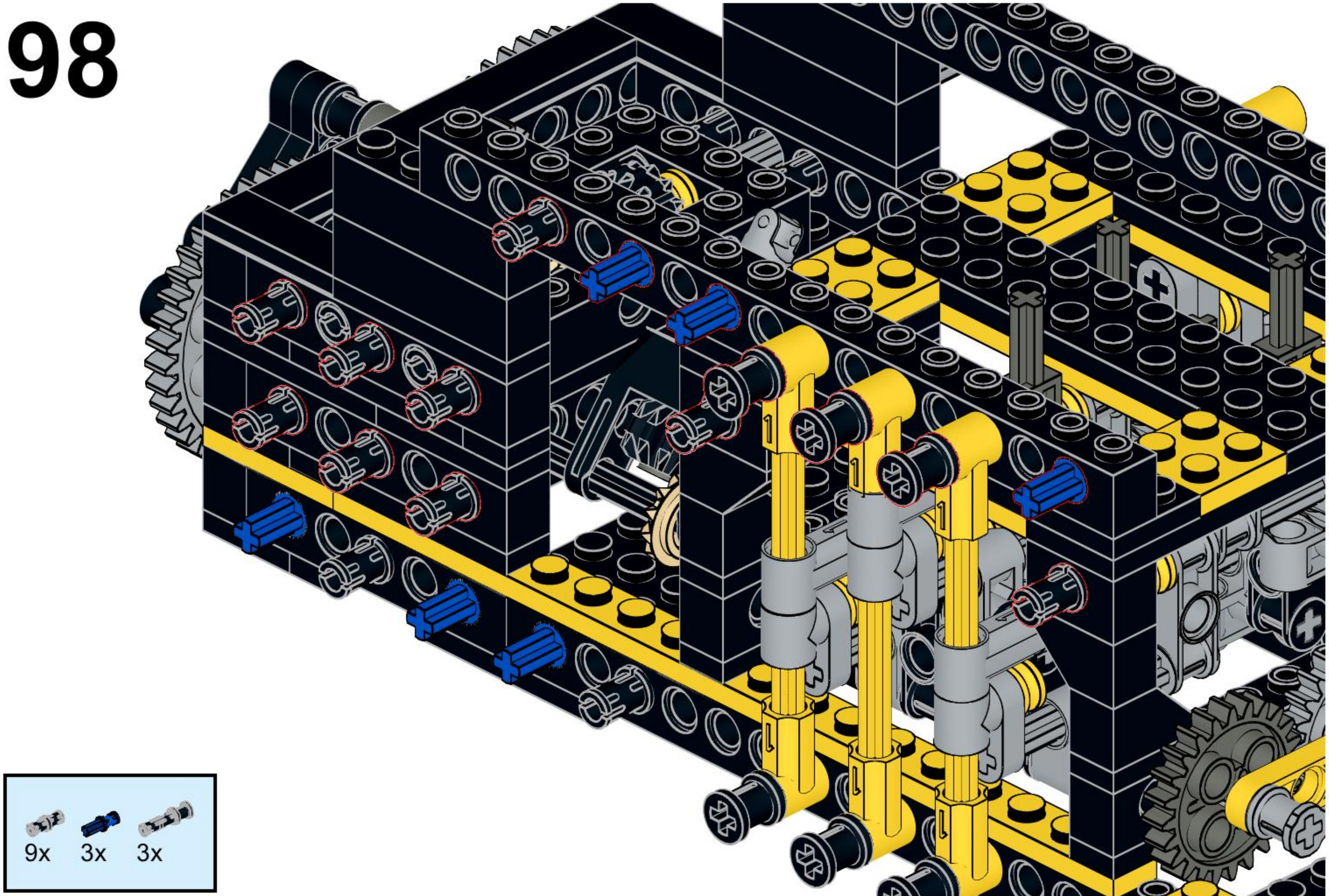

99

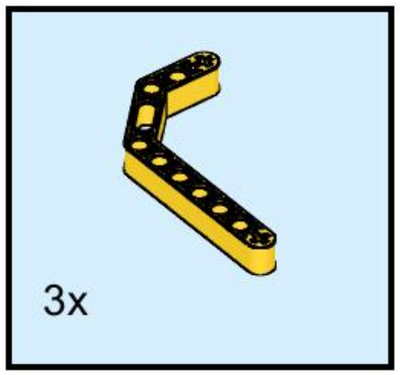

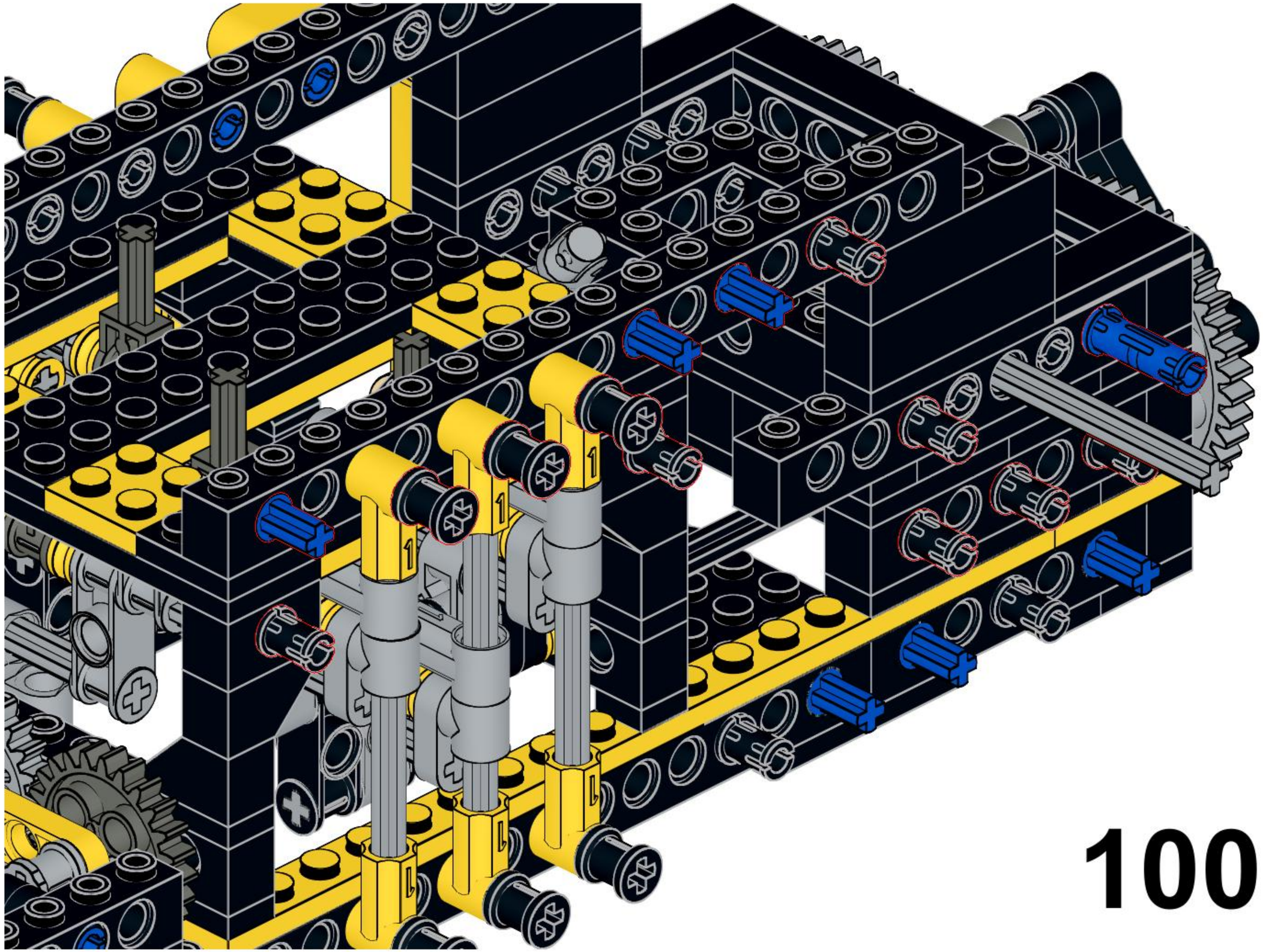

7x

3x

1x

3x

101

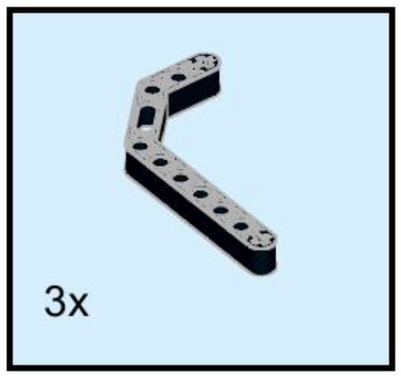

102

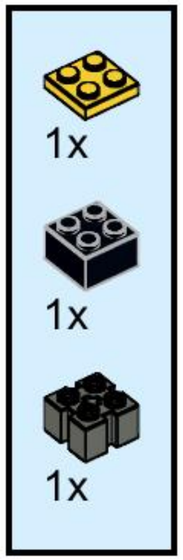

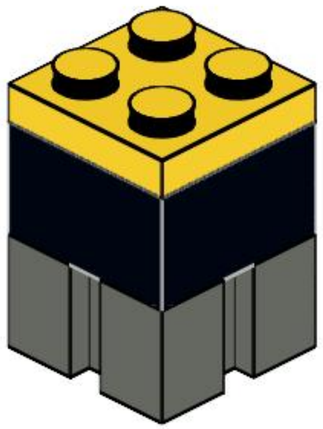

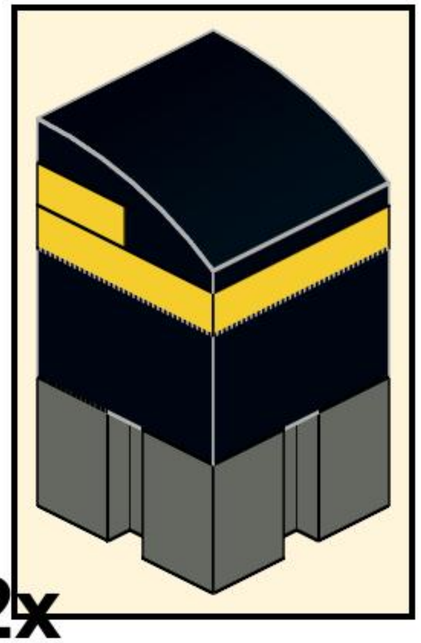

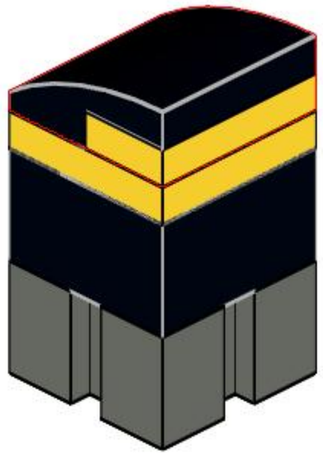

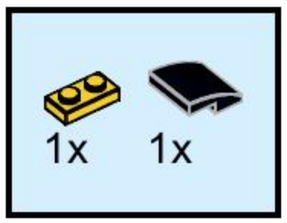
1x
1x

104

Each of these steps should be pushed down as far as they will go.

Support the frames from underneath with a finger as you push the steps down.

You should rotate the mechanism by hand again after installing the steps, viewing from underneath to ensure alignments are correct and no parts are catching.

There should be free movement, but note the bottom edges of the 2x2 bricks may catch on the surrounding plates, up until all of the framing bricks are placed around all six steps (about 20 more pages of instructions).

Always rotate slowly, by hand.

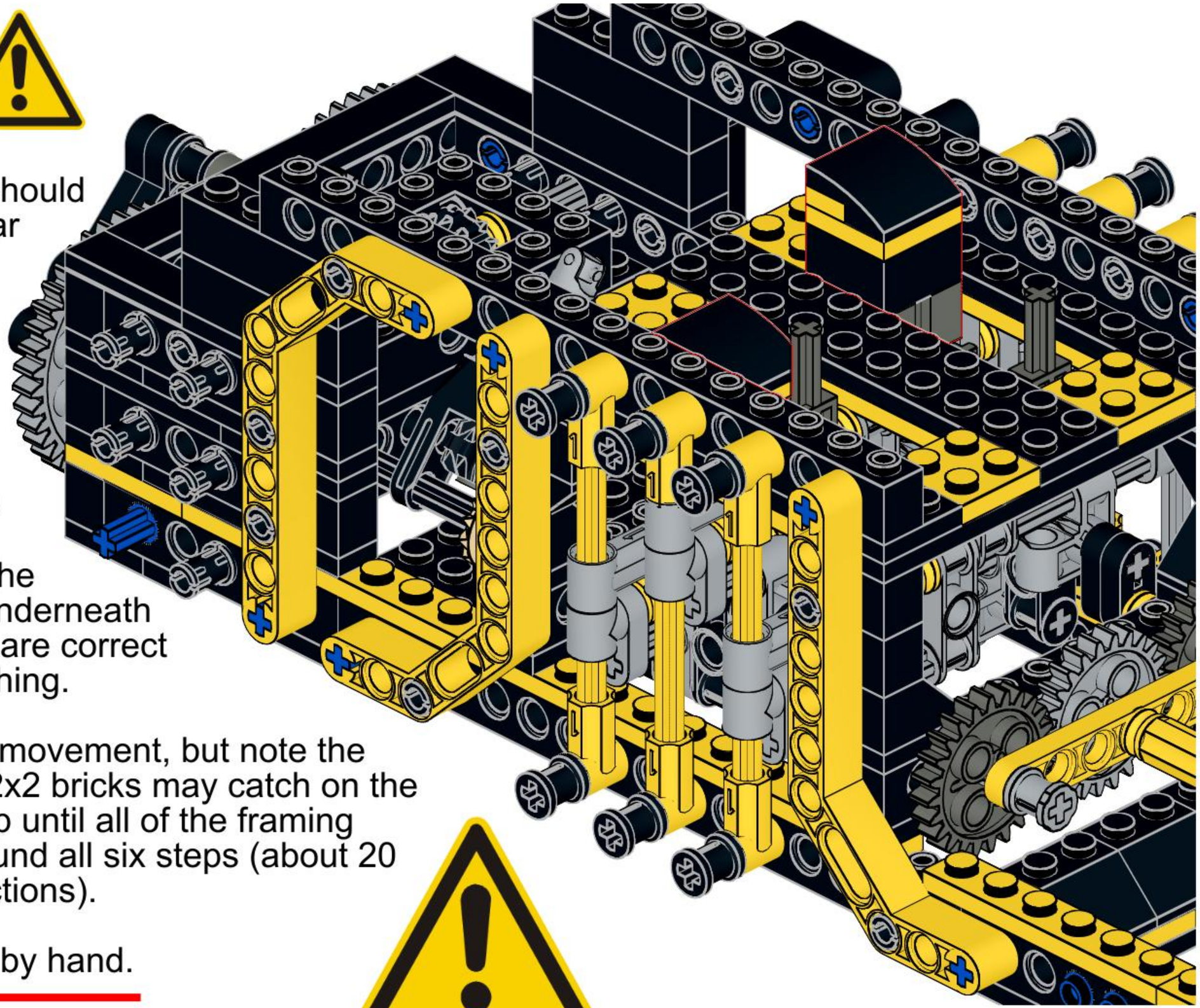

105

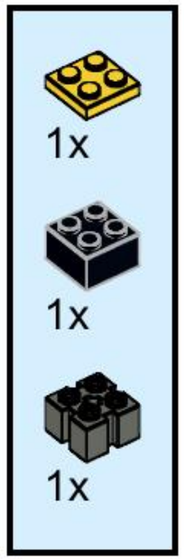

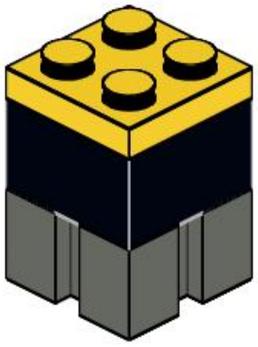

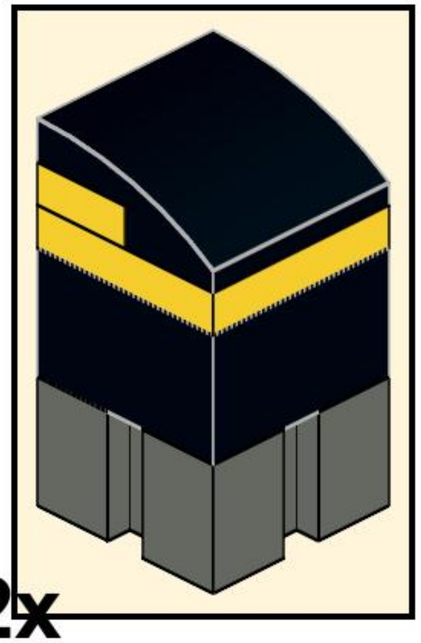

2x

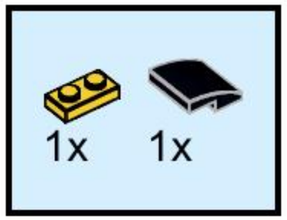

106

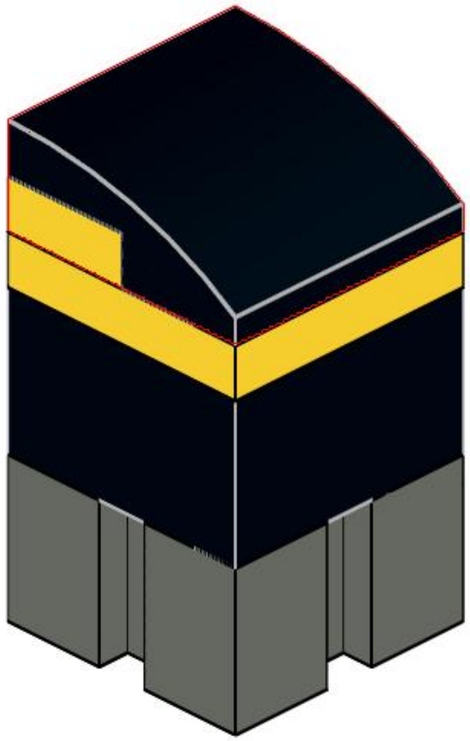

107

Follow the previous instructions to support the frame while adding these steps. Inspect, align and test the mechanism again, slowly by hand.

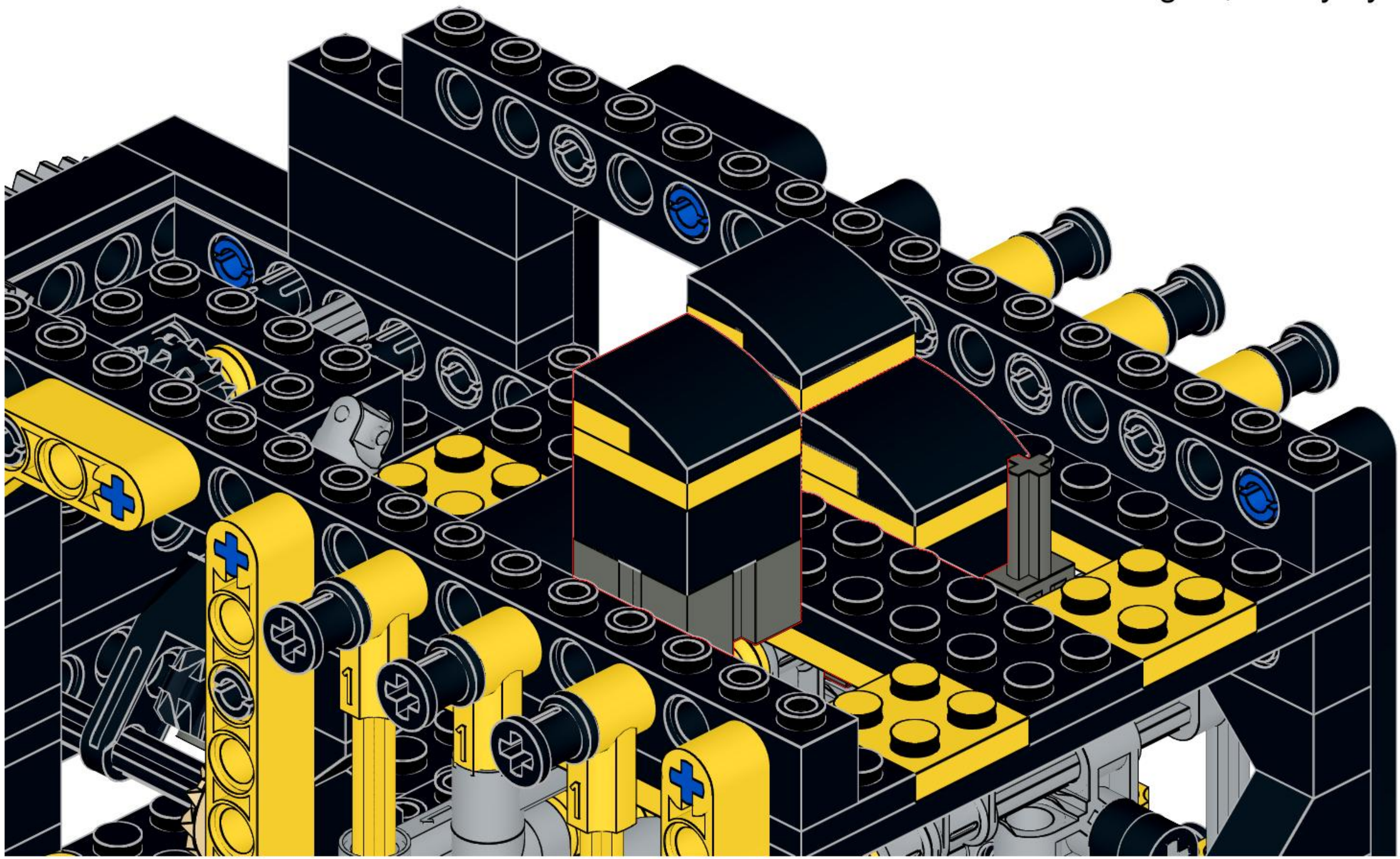

108

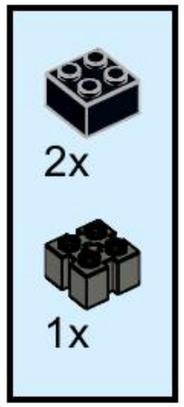

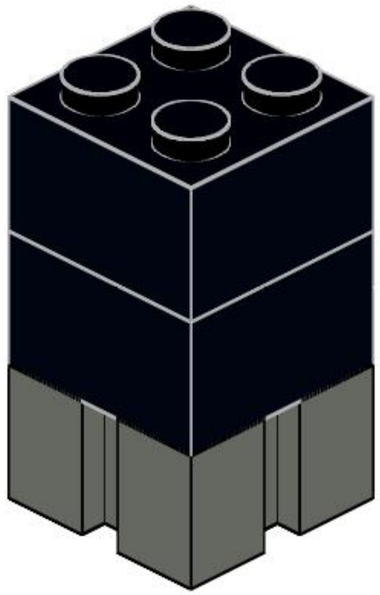

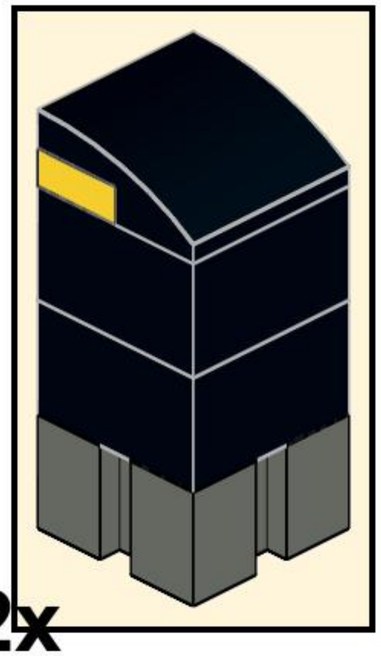

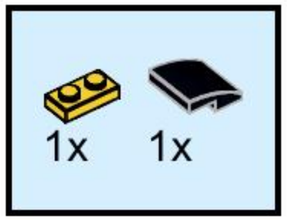
1x
1x

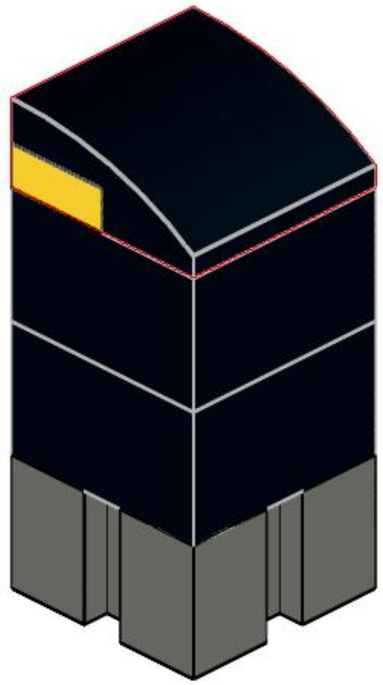

Repeat previous method for installing and testing the mechanism.

110

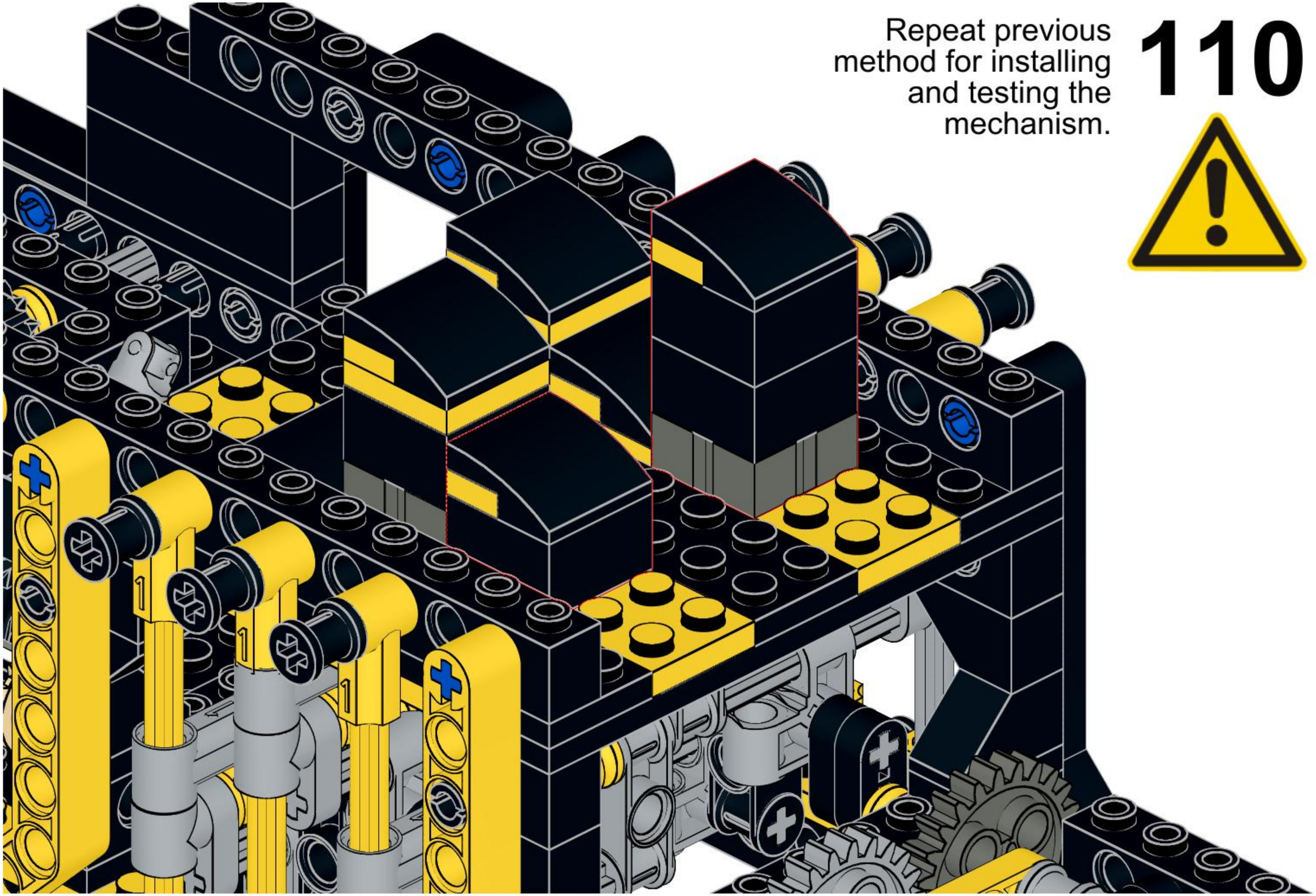

111

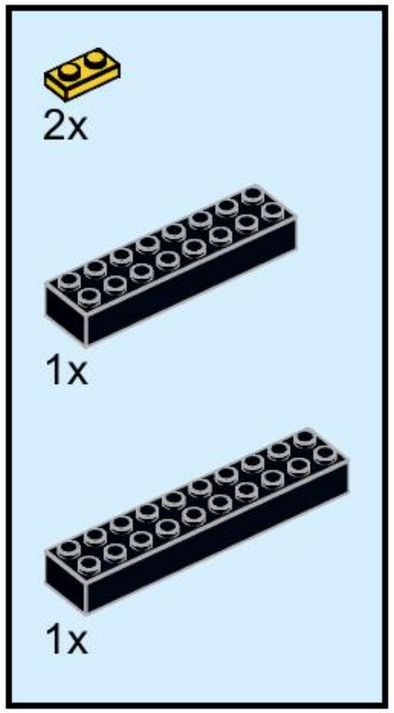

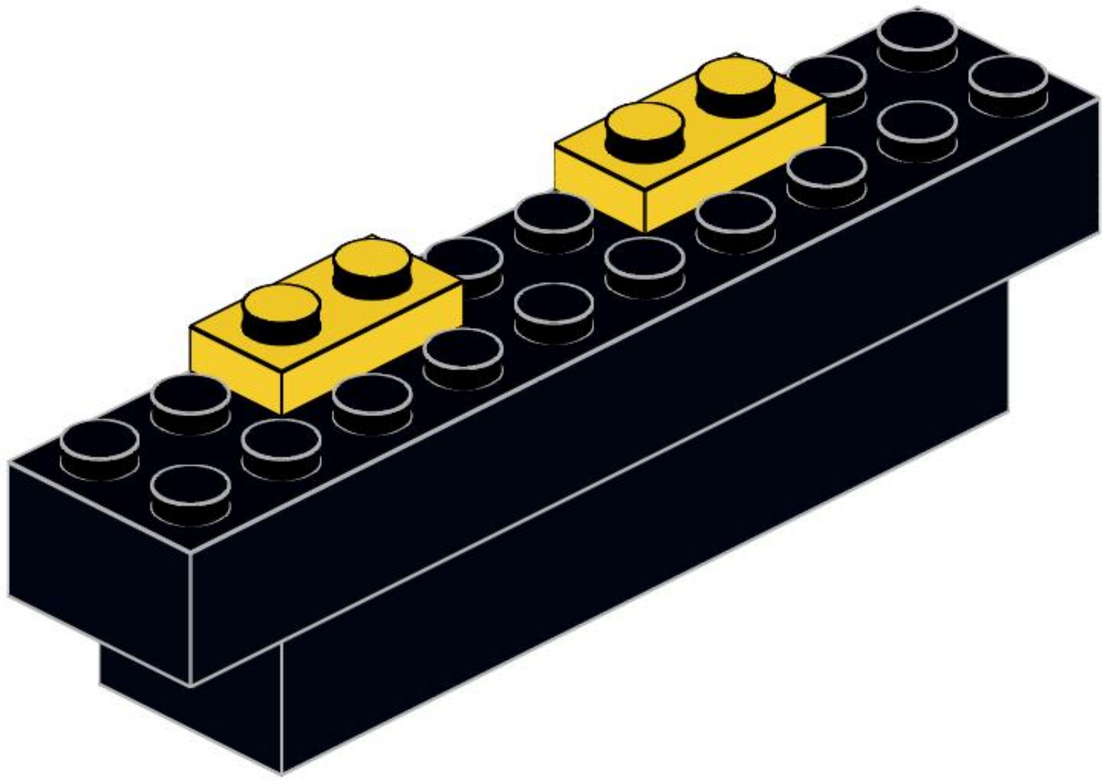

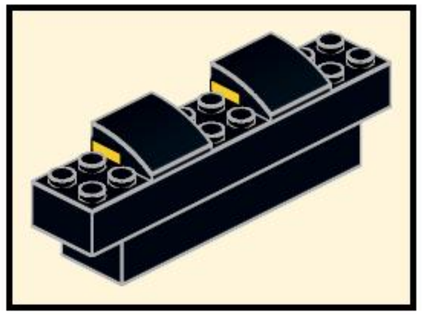

2x

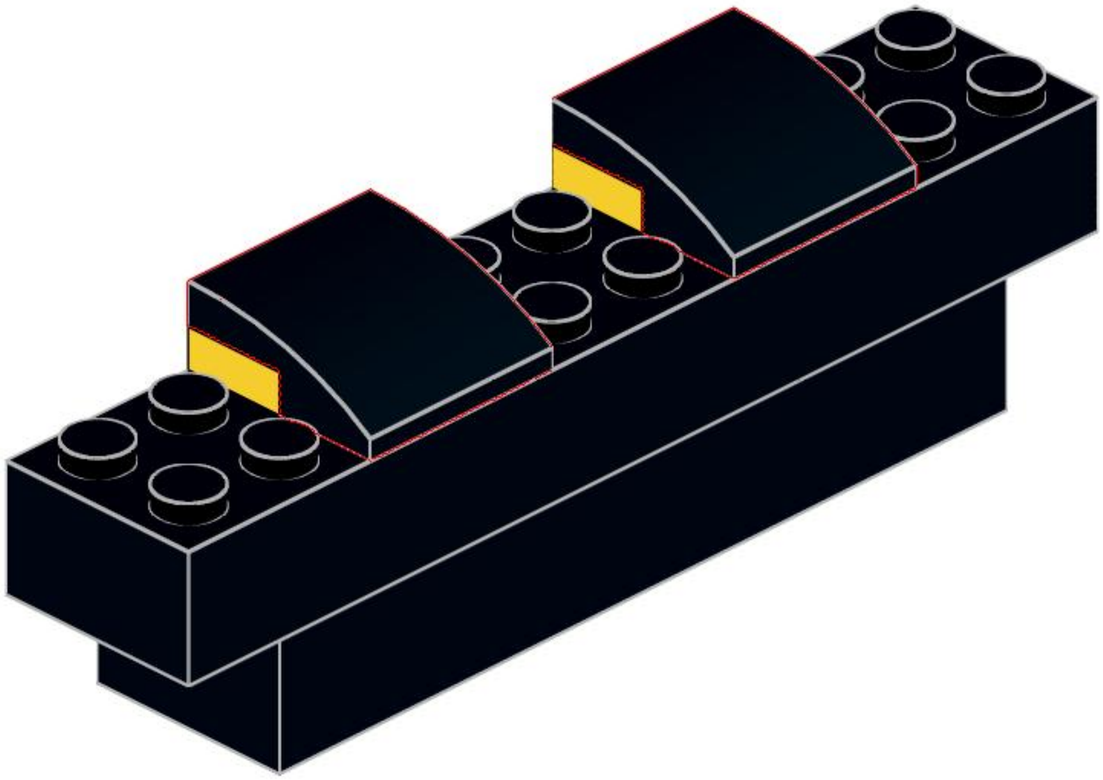

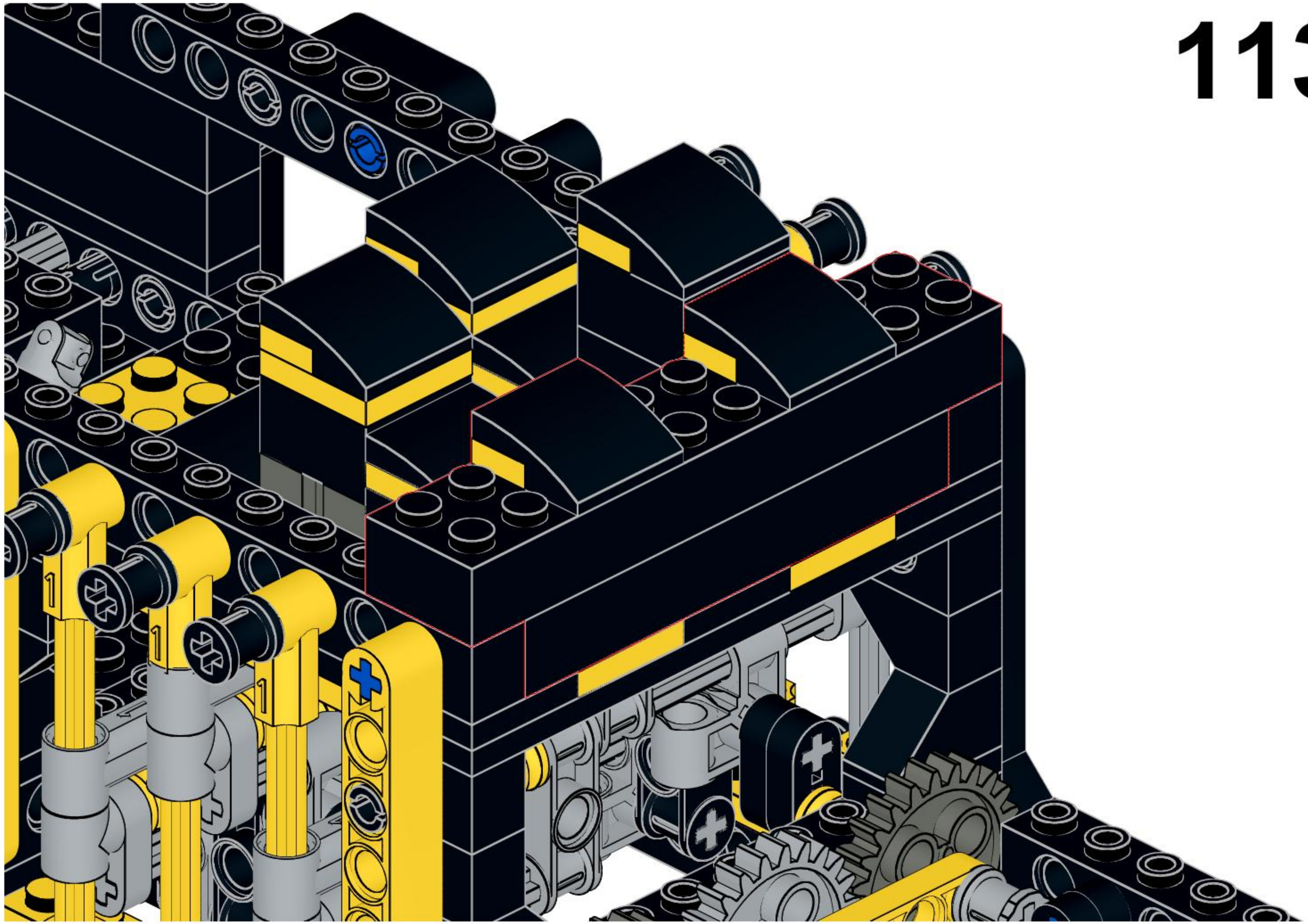

114

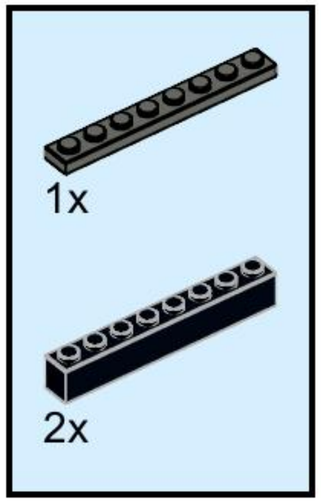

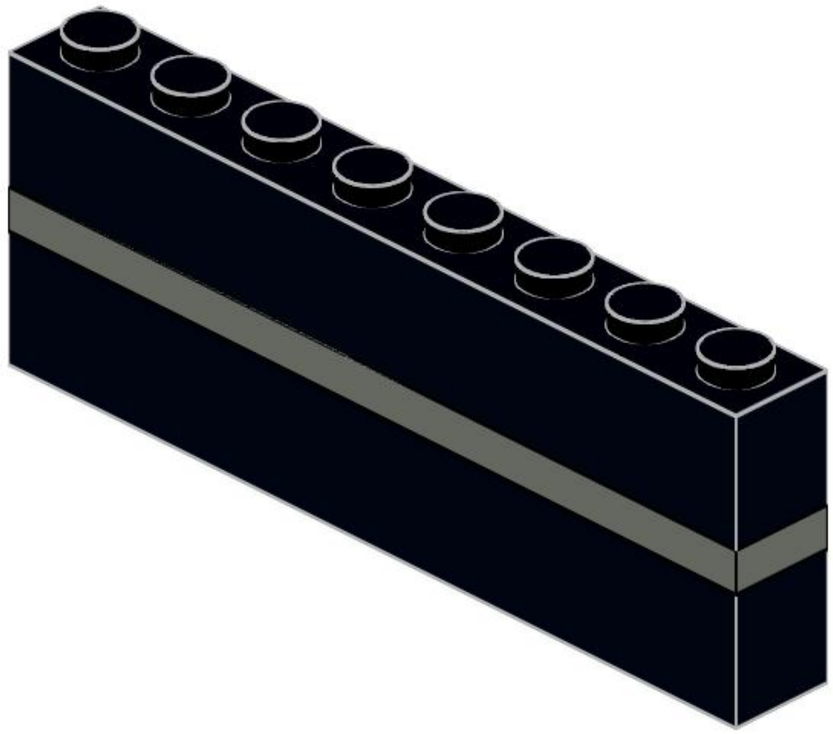

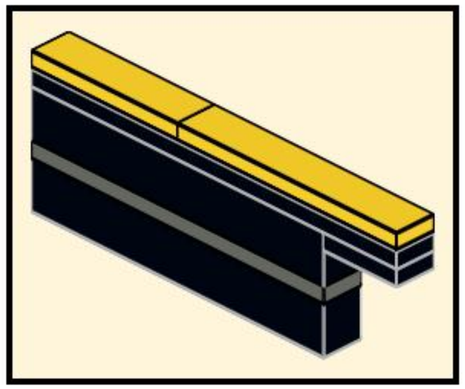

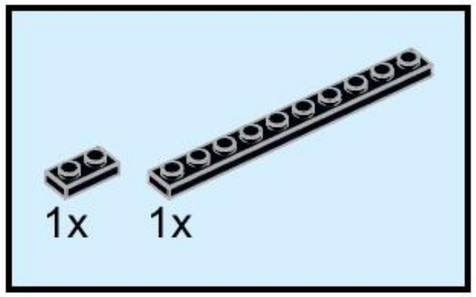

115

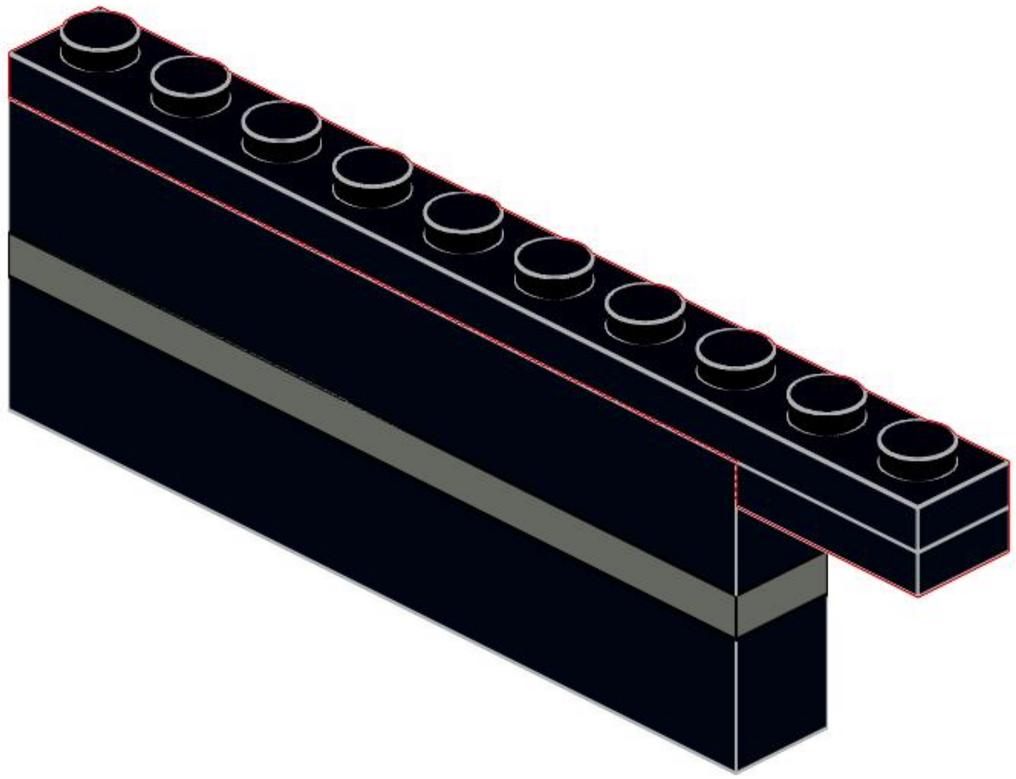

116

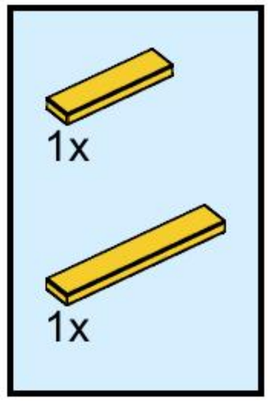

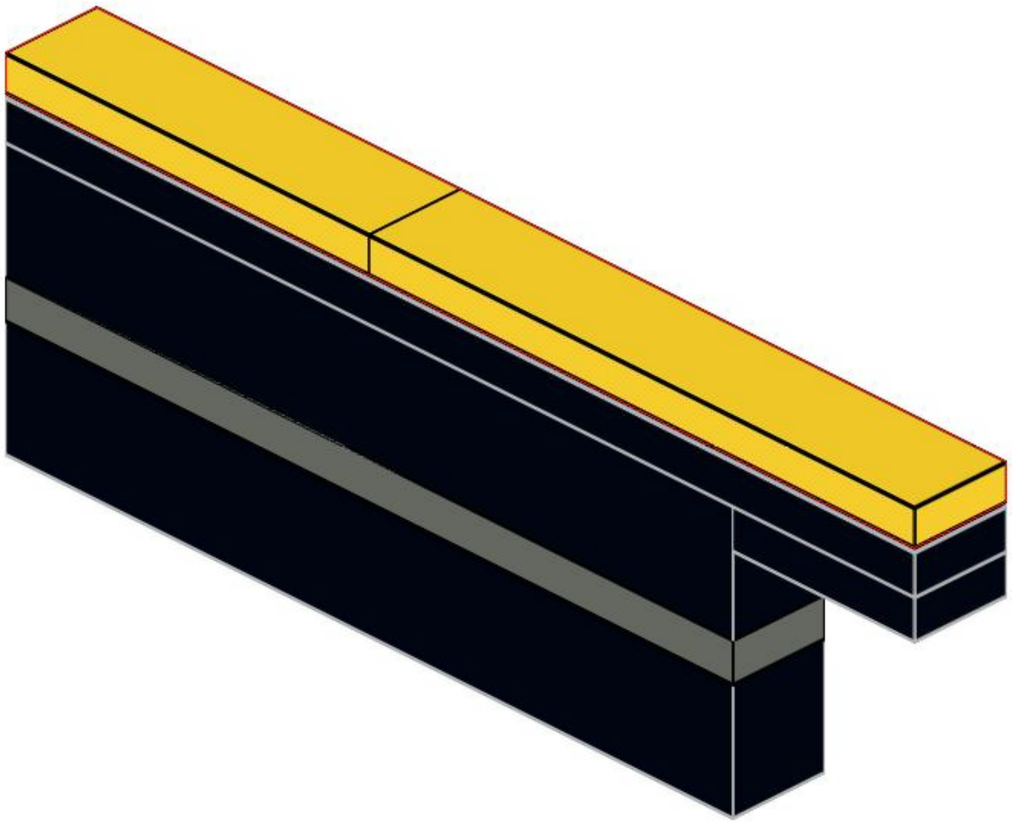

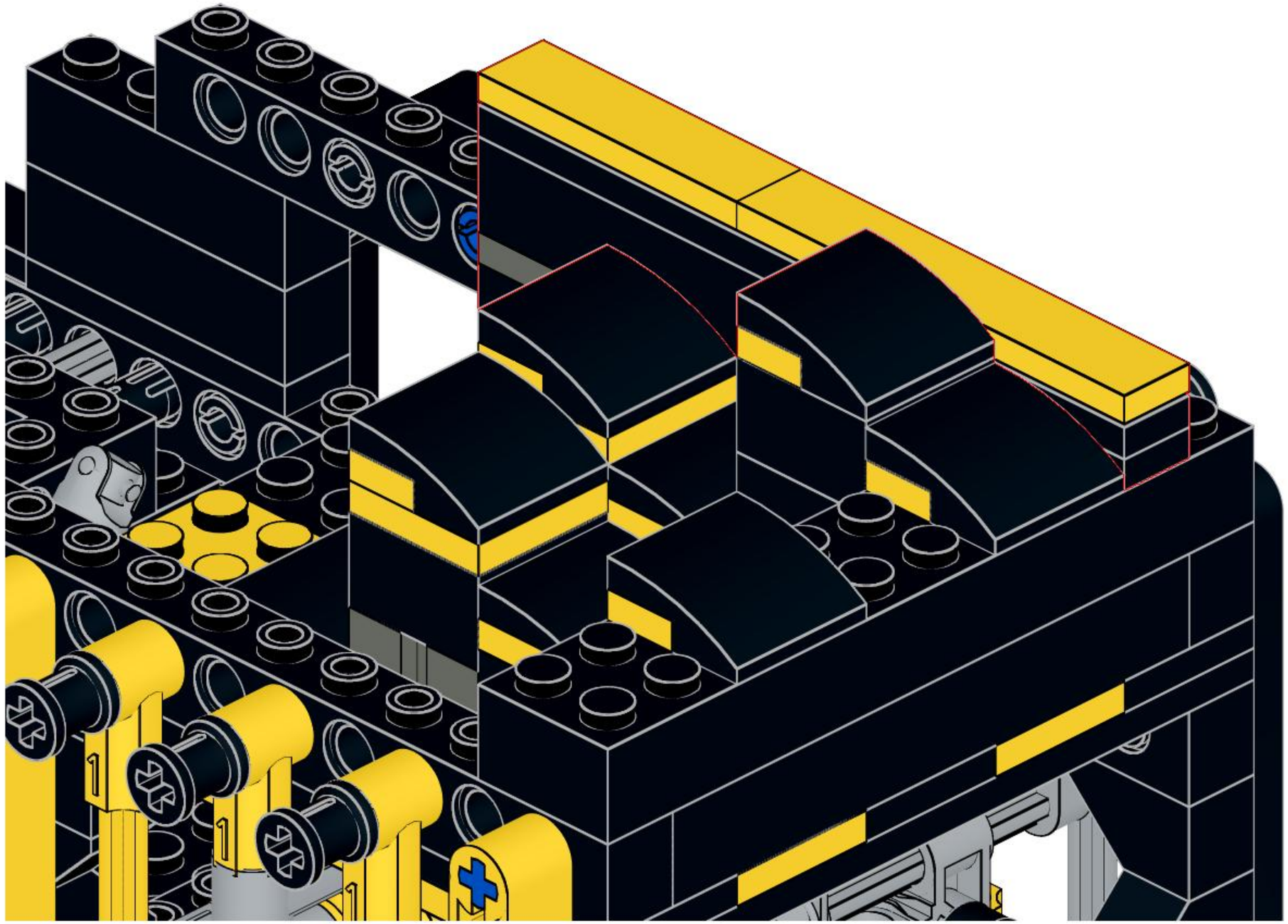

118

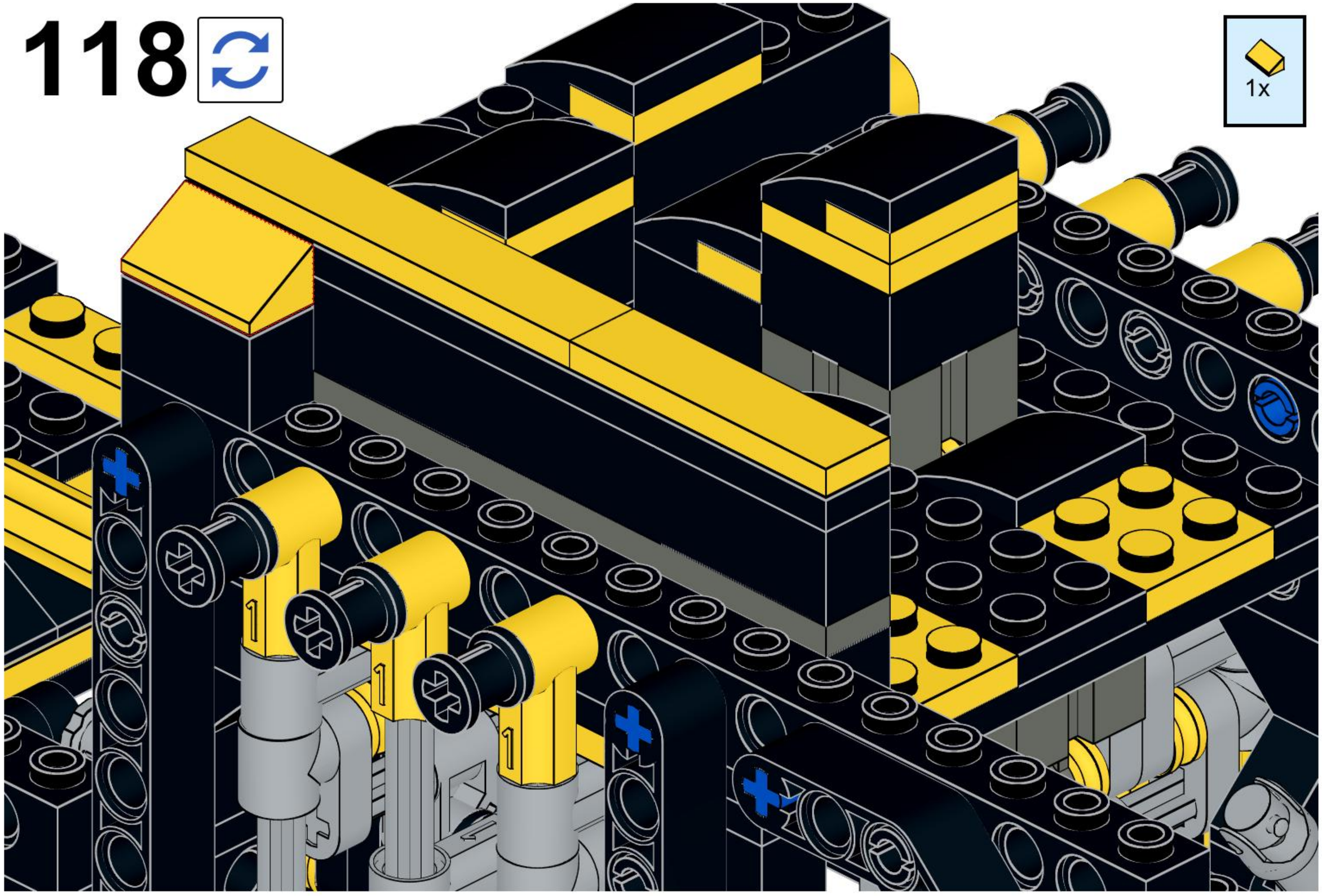

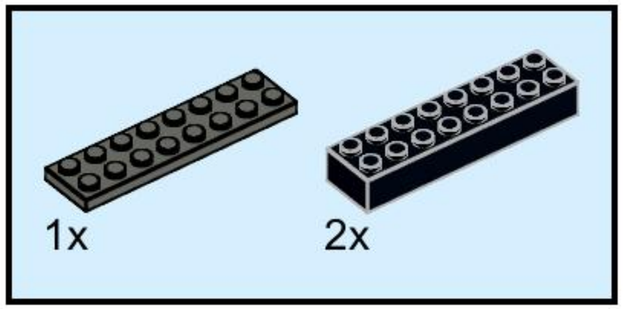
1x
2x

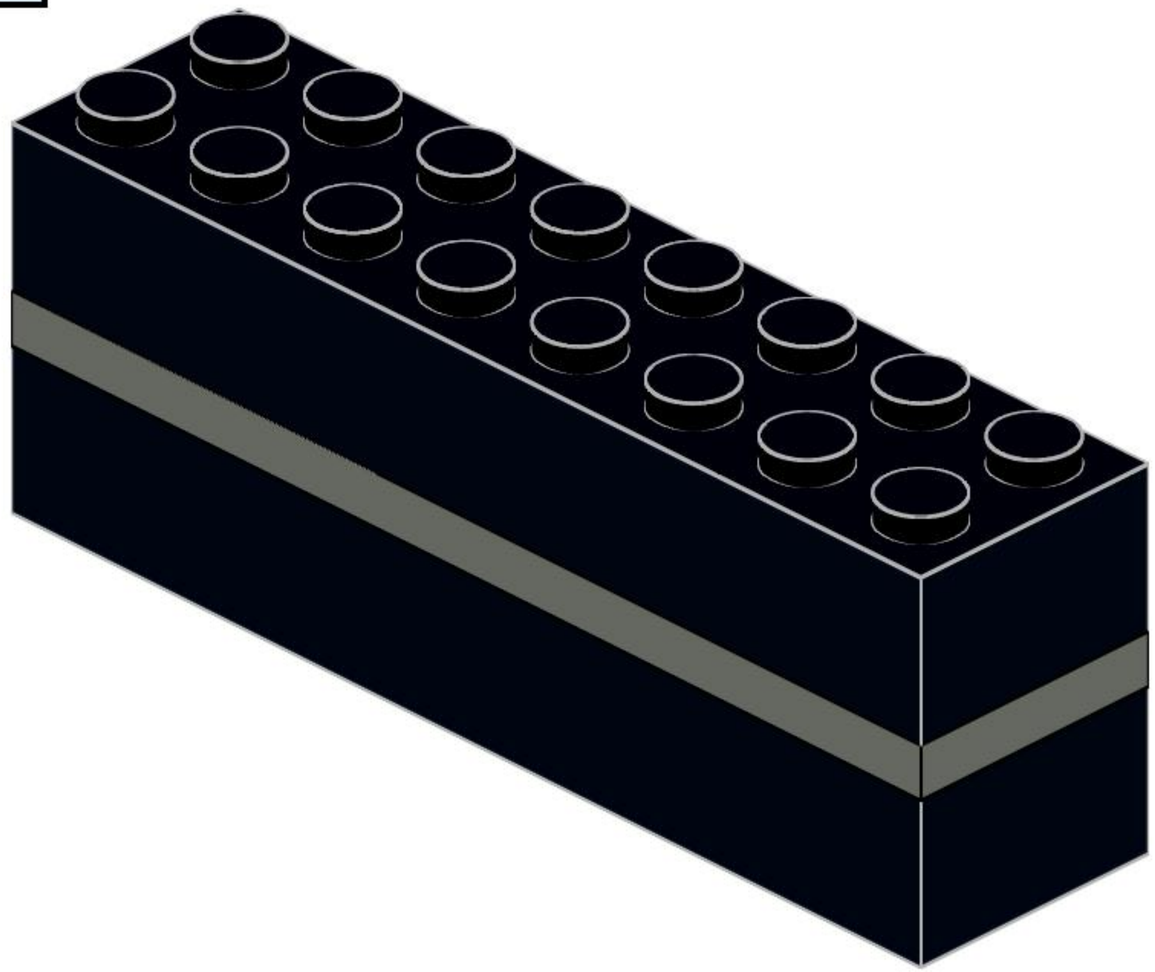

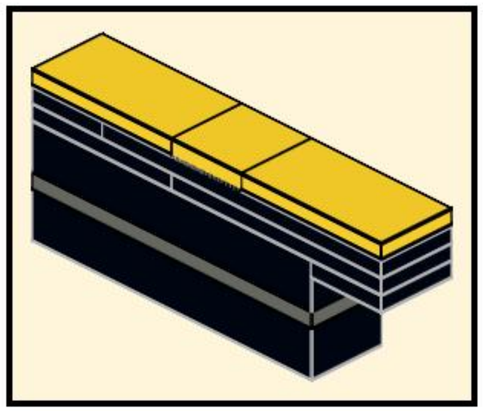

120

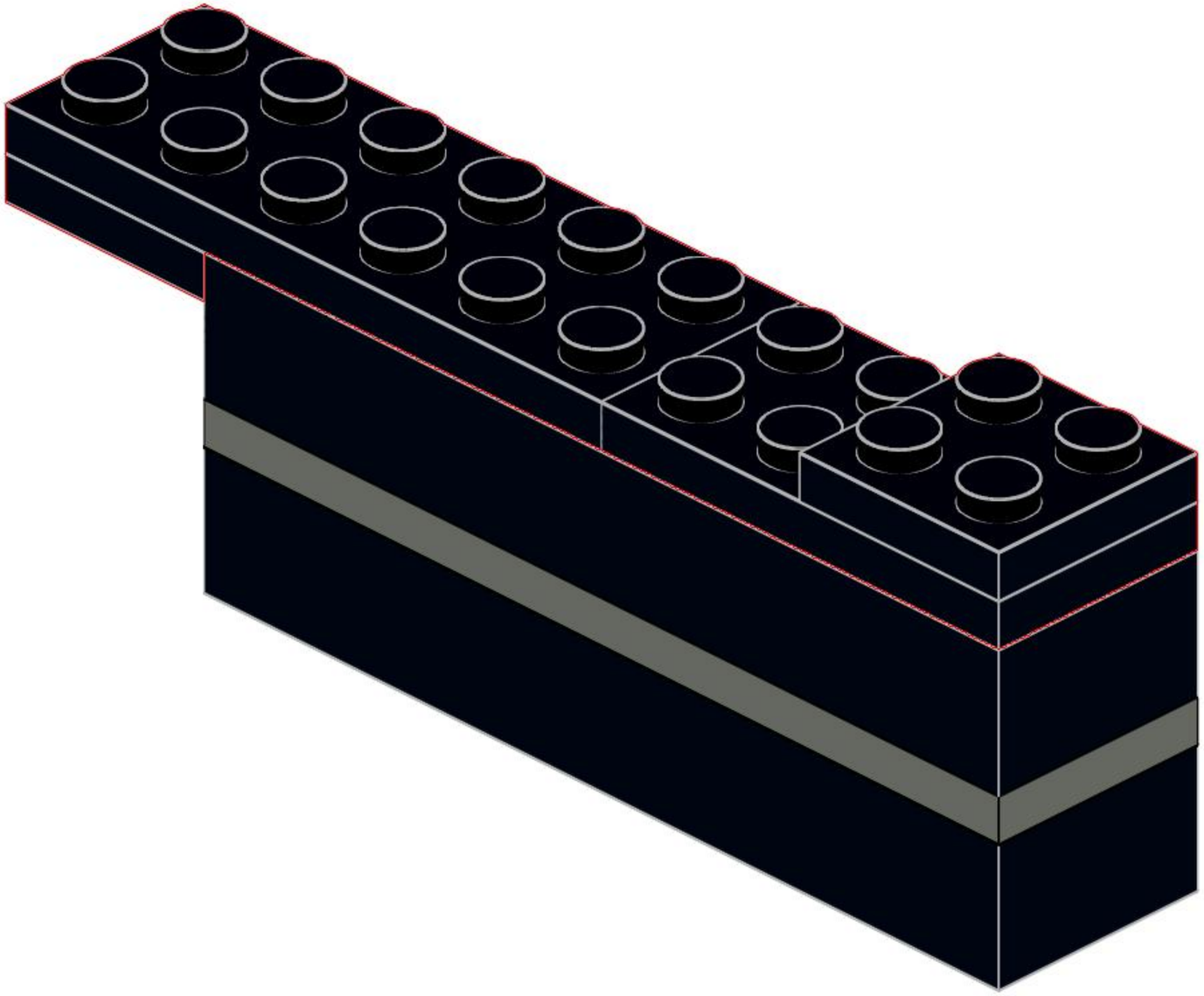

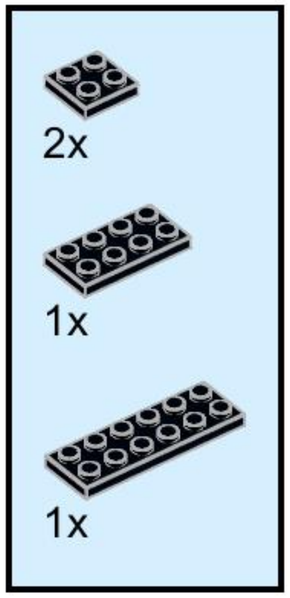

121

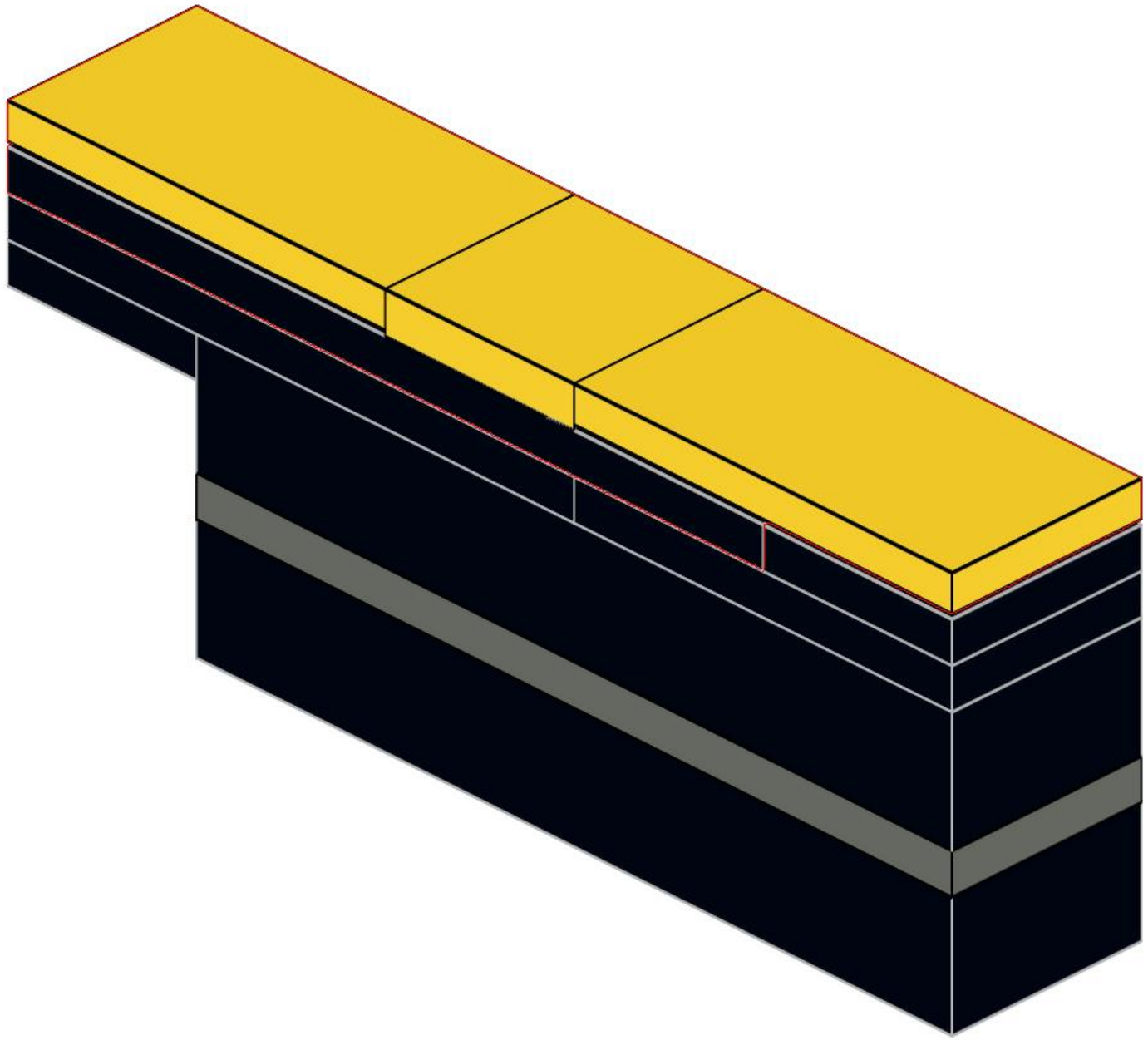

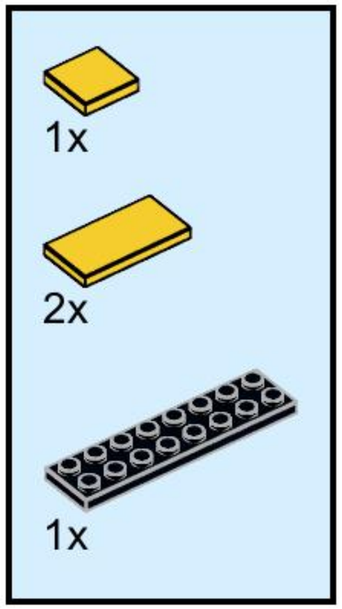

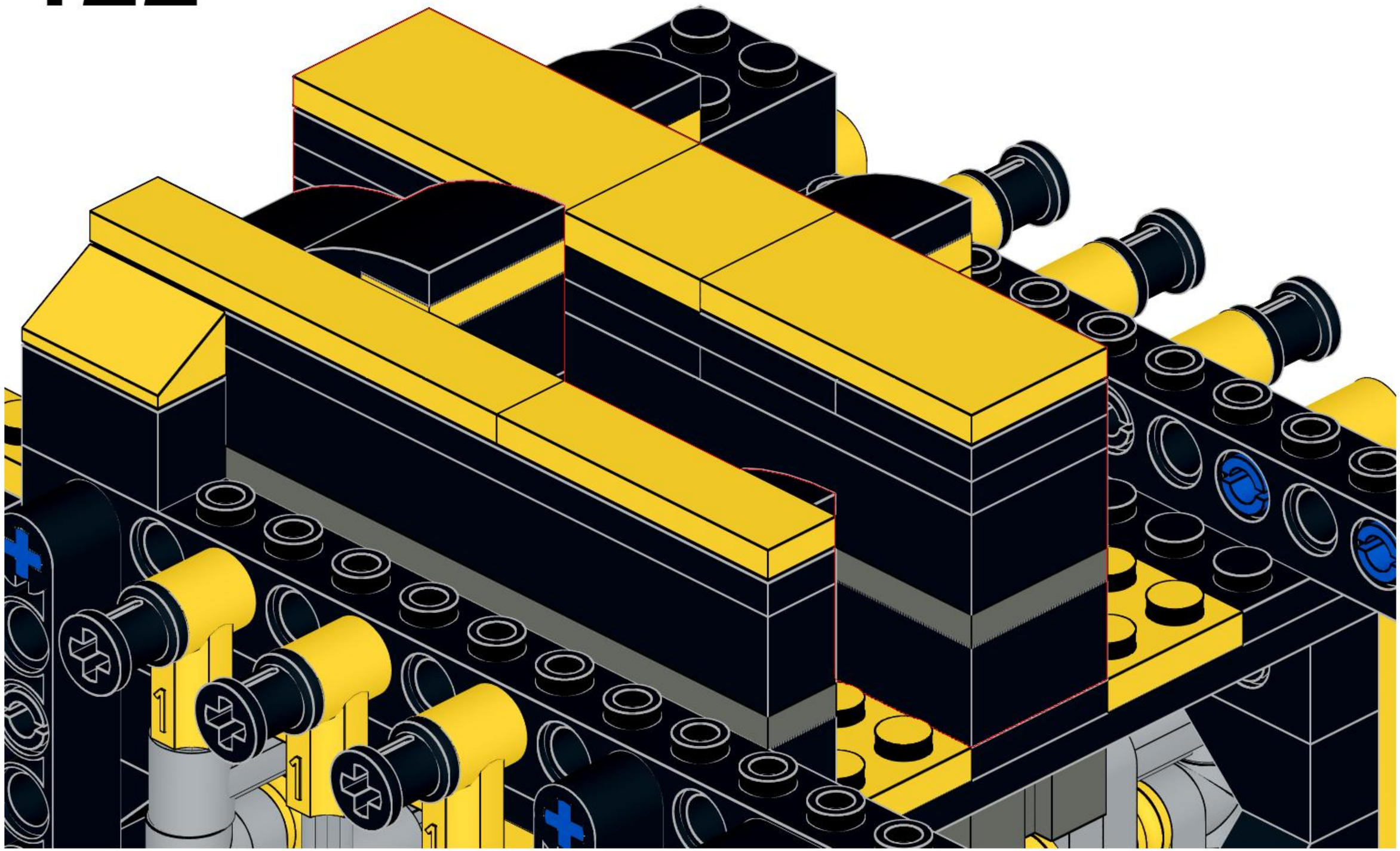

123

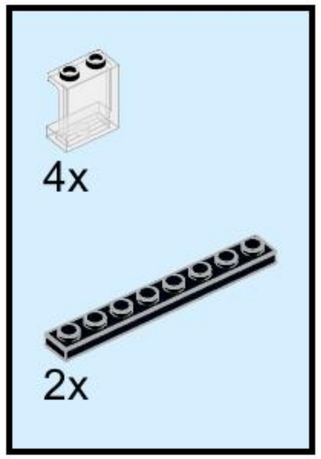

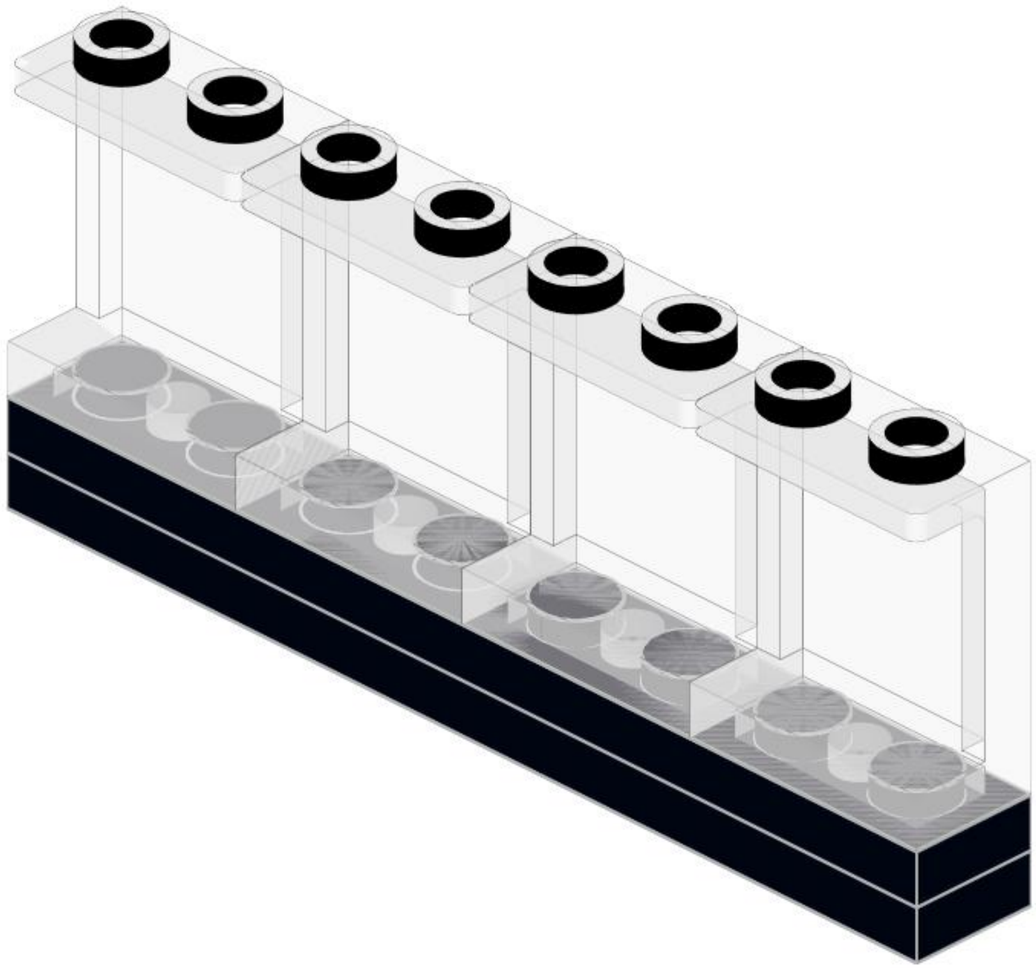

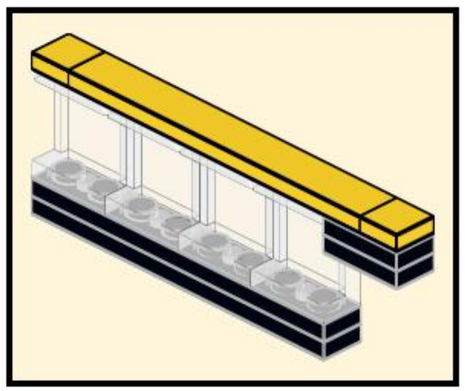

124

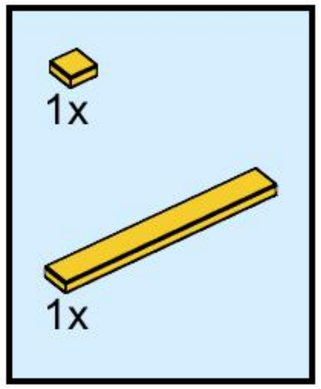

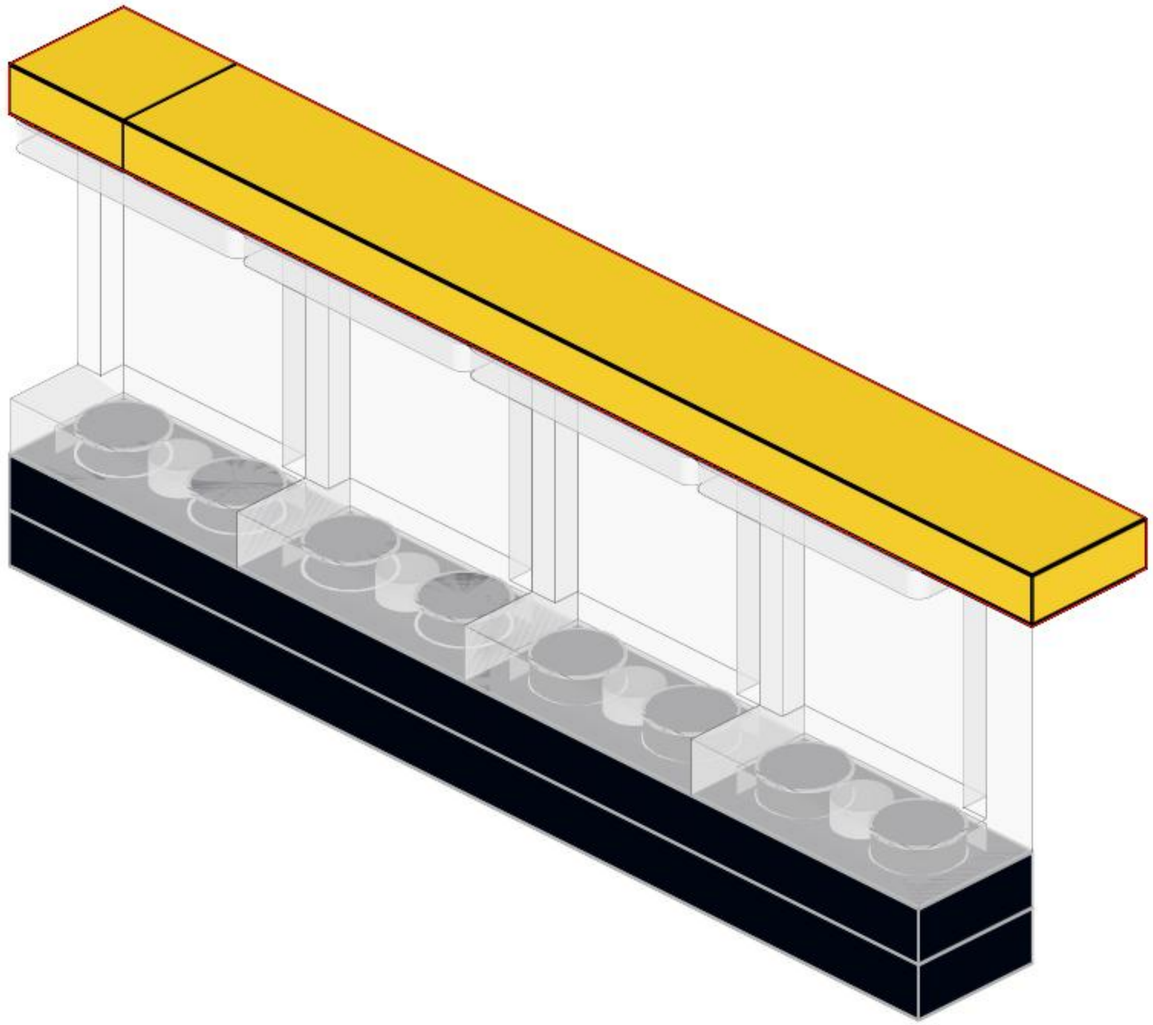

125

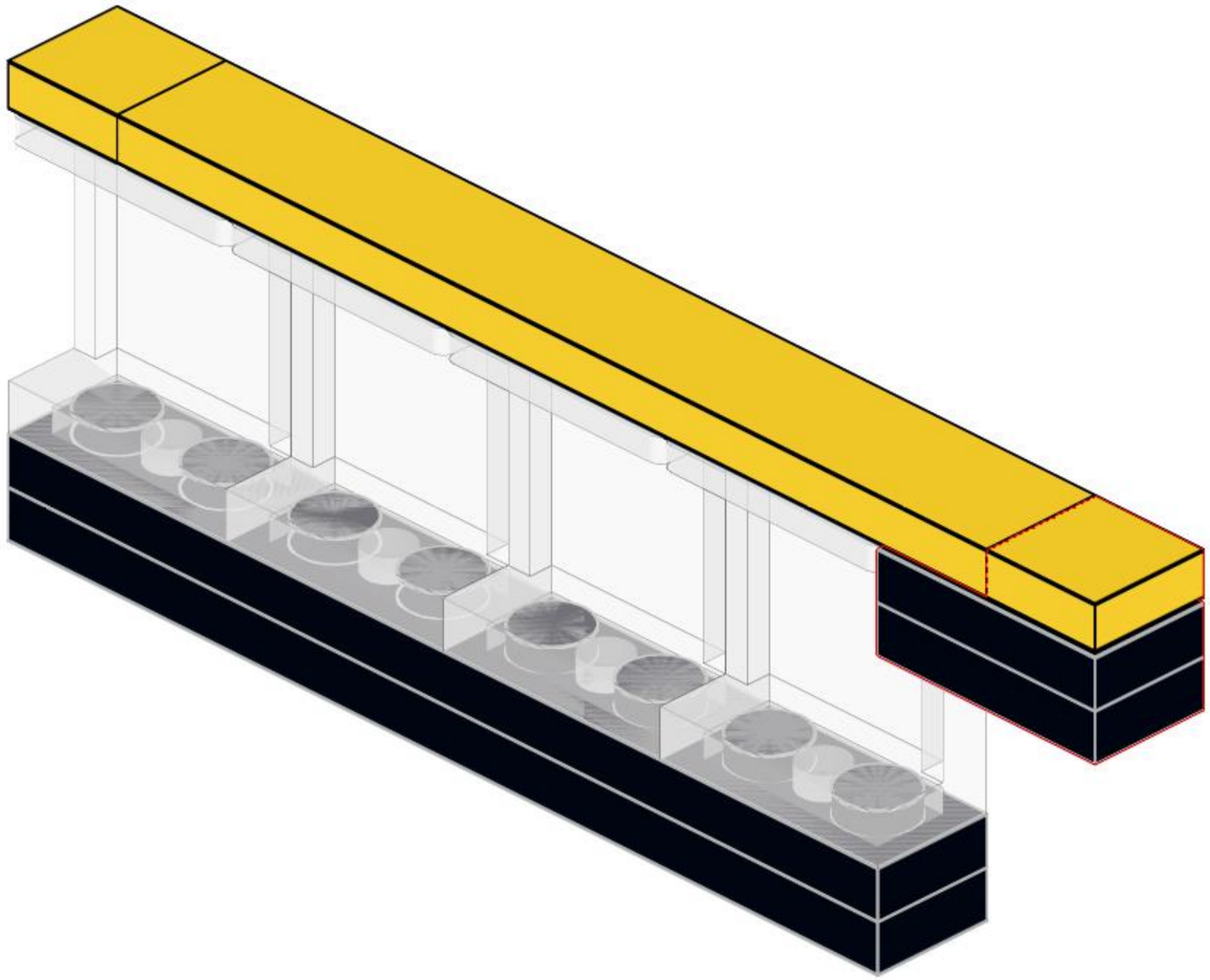

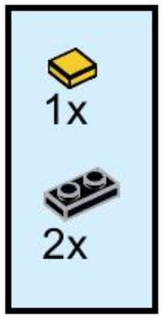

126

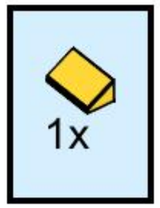

The steps are now fully framed. Confirm the mechanism moves smoothly by hand. At this point, if you have the means to run the mechanism ** slowly ** (train controller, IR speed controller, variable speed rechargable train battery) then attach a motor to the long grey axle protruding from the rear and run the mechanism slowly.

If you are only able to run the mechanism at full speed, wait until you have attached the clutched motor assembly.

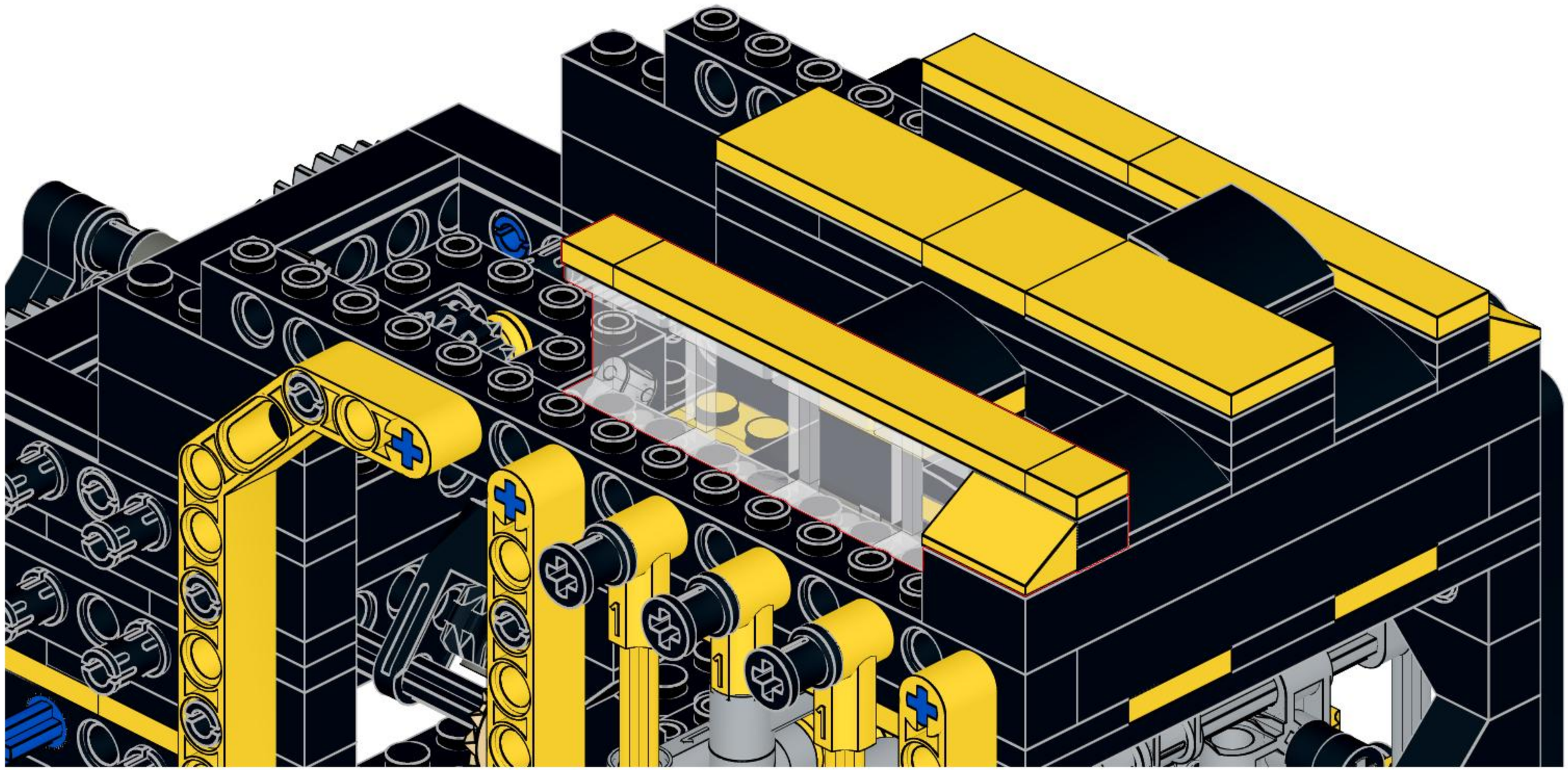

127

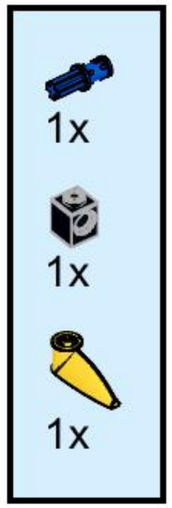

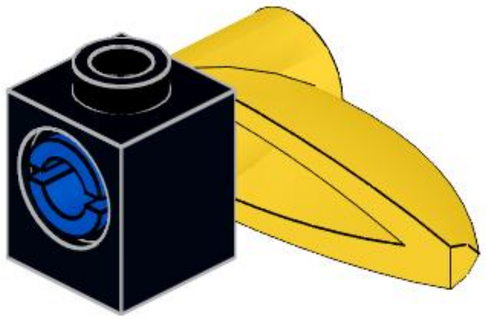

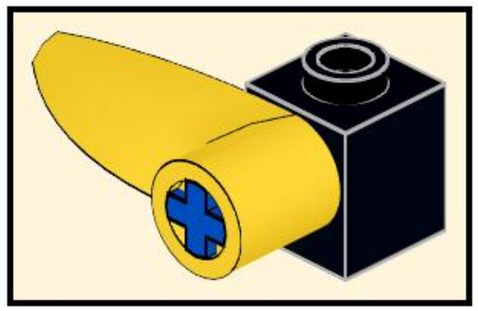

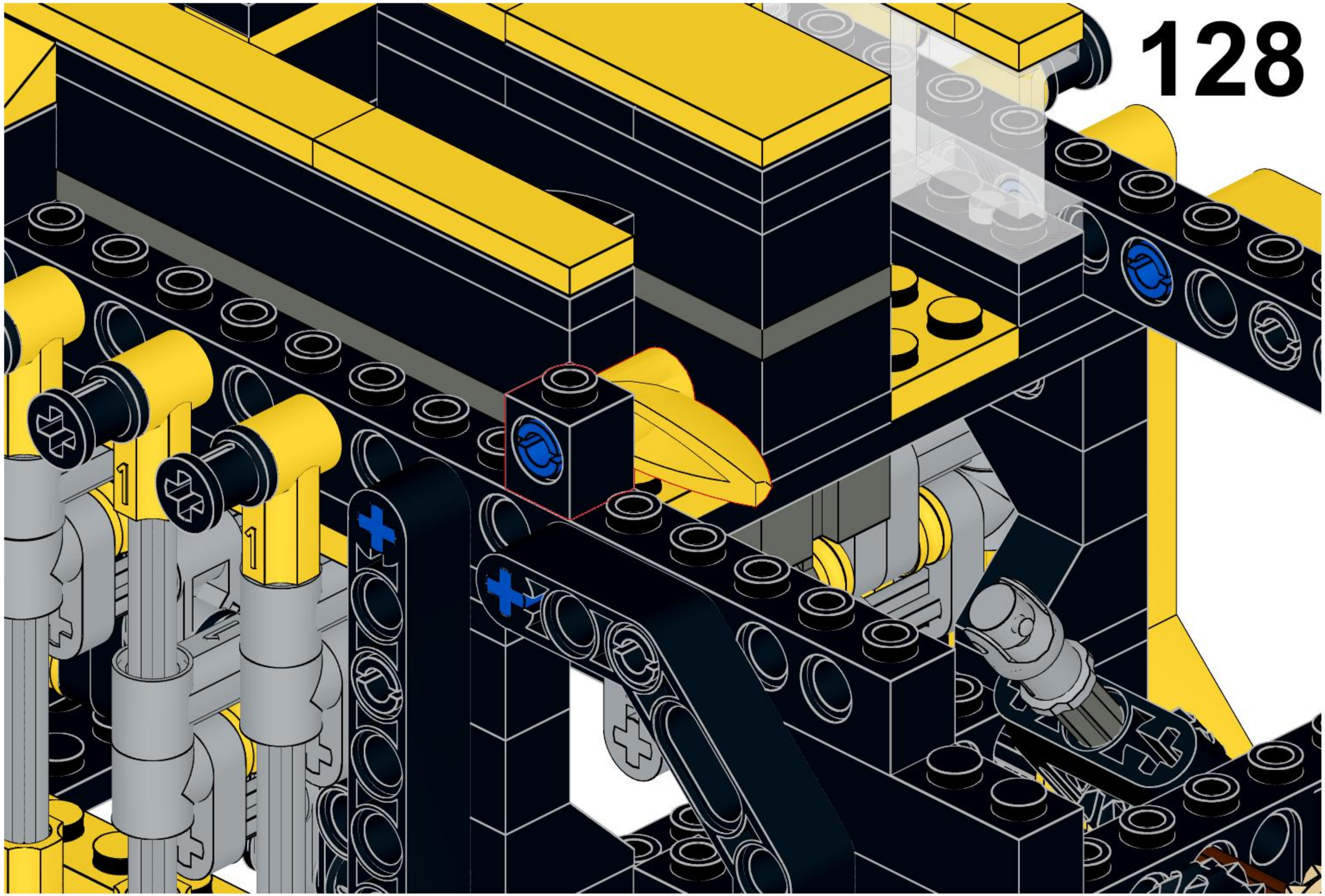

129

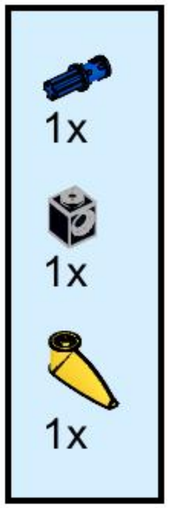

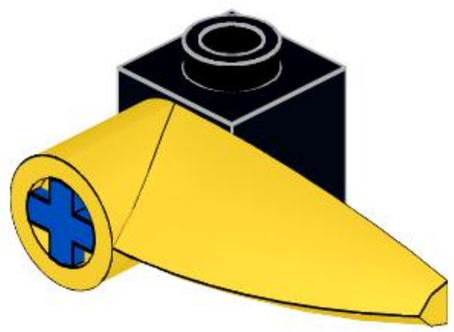

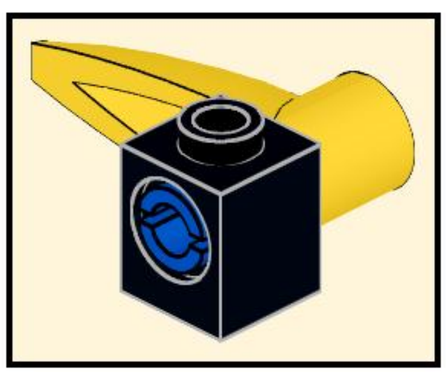

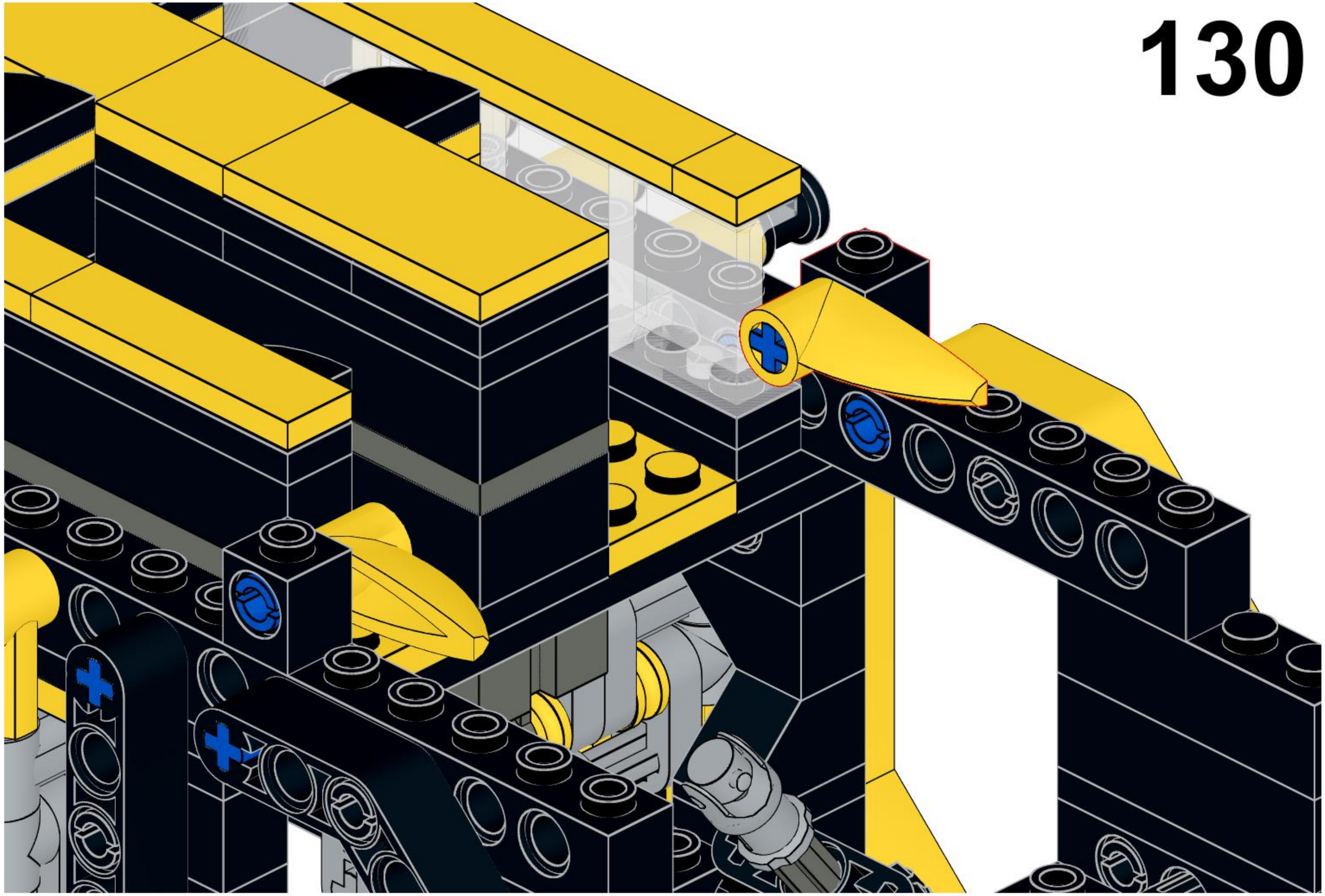

131

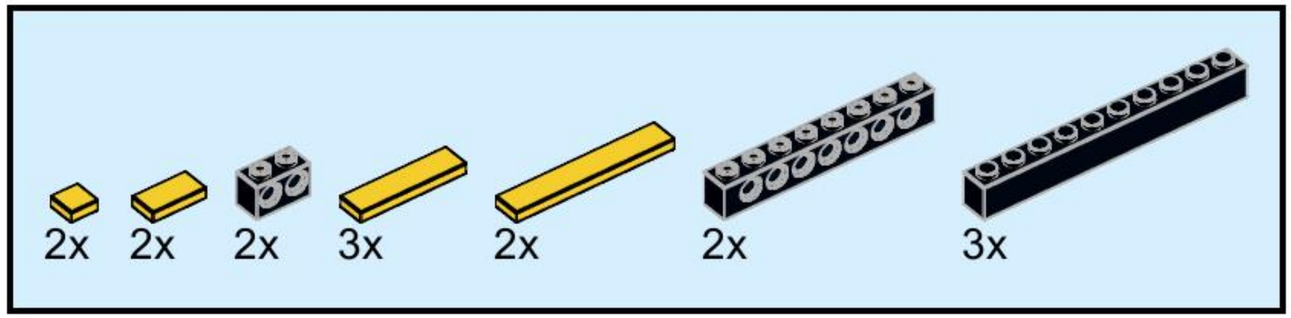

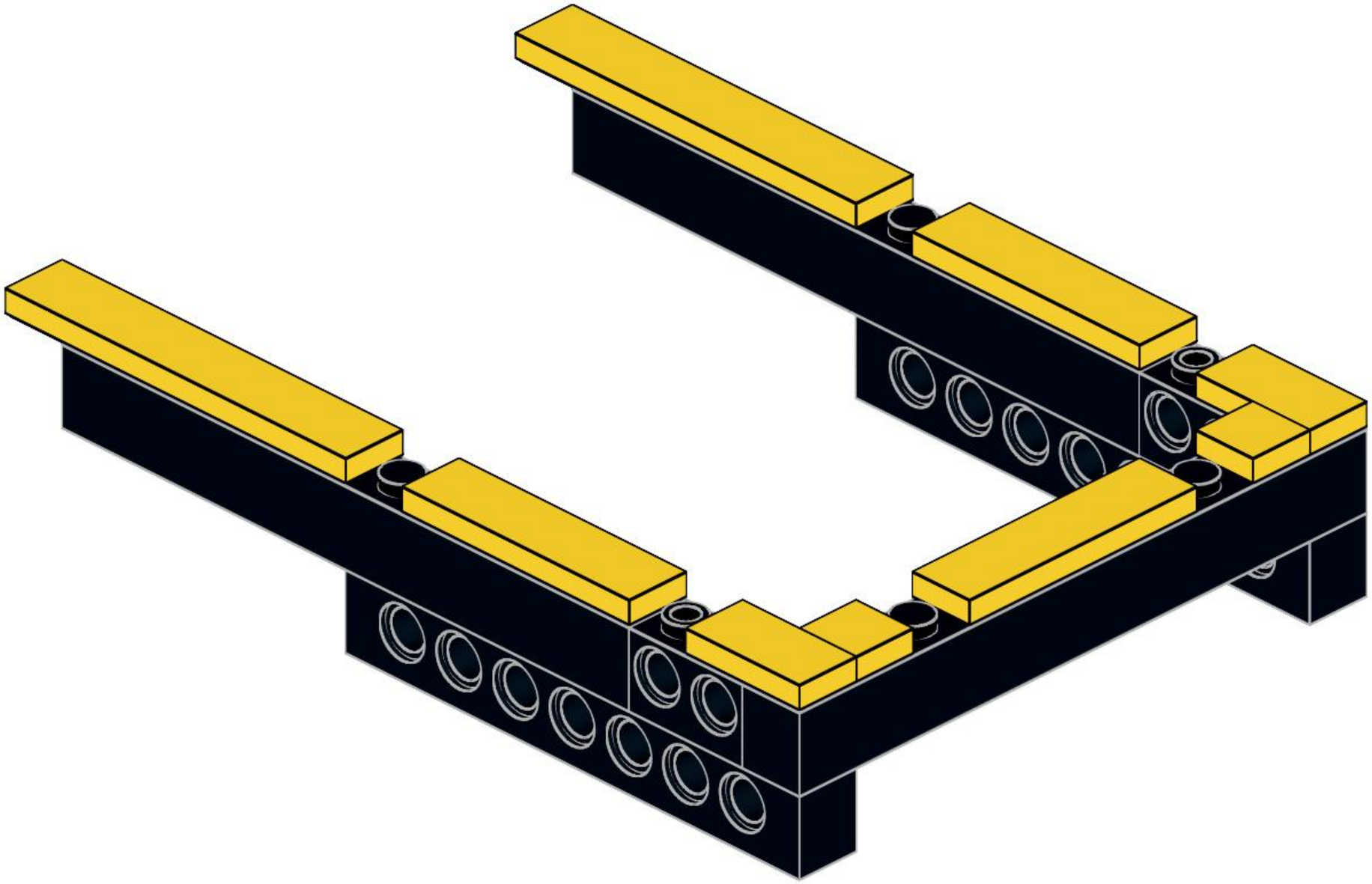

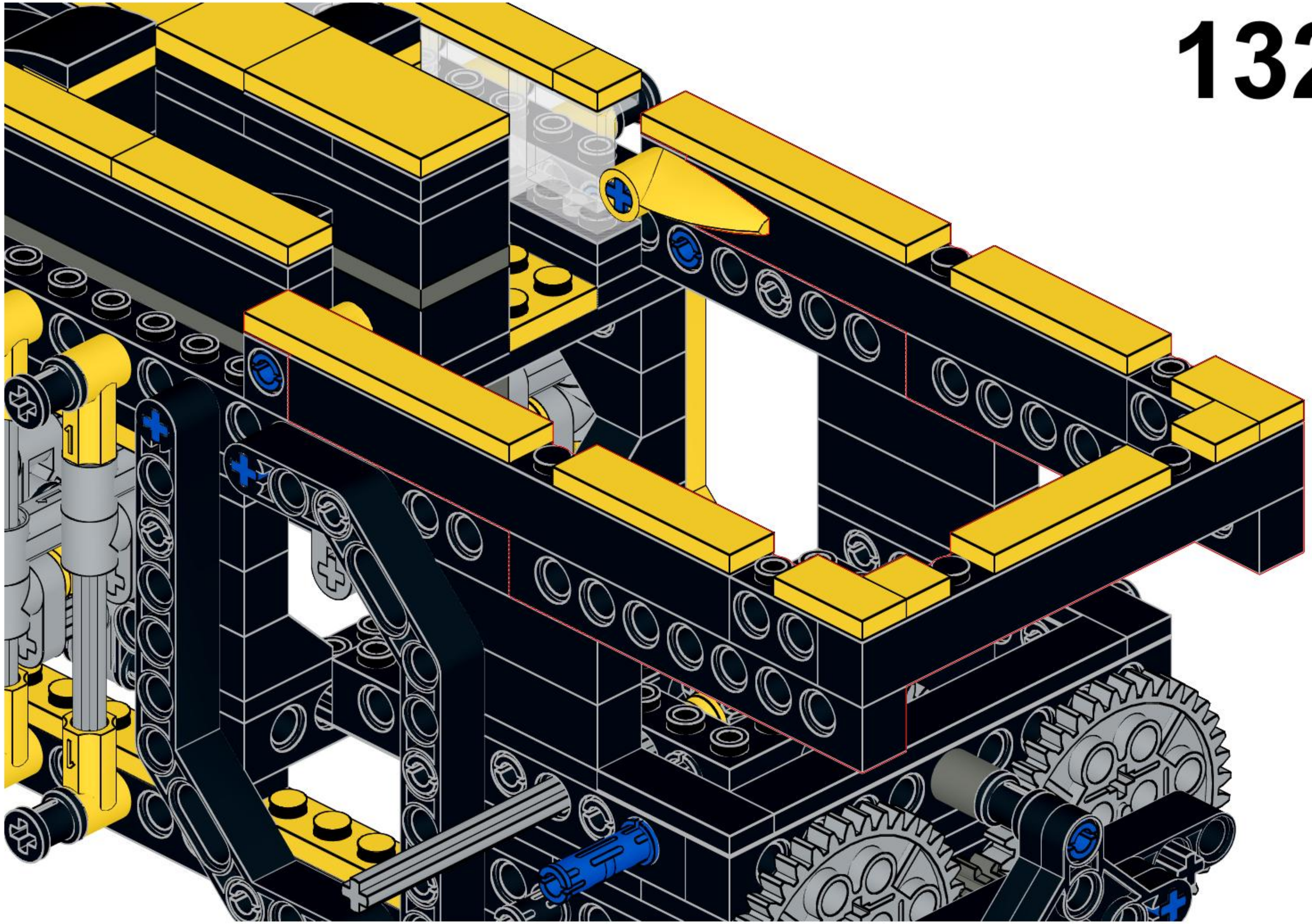

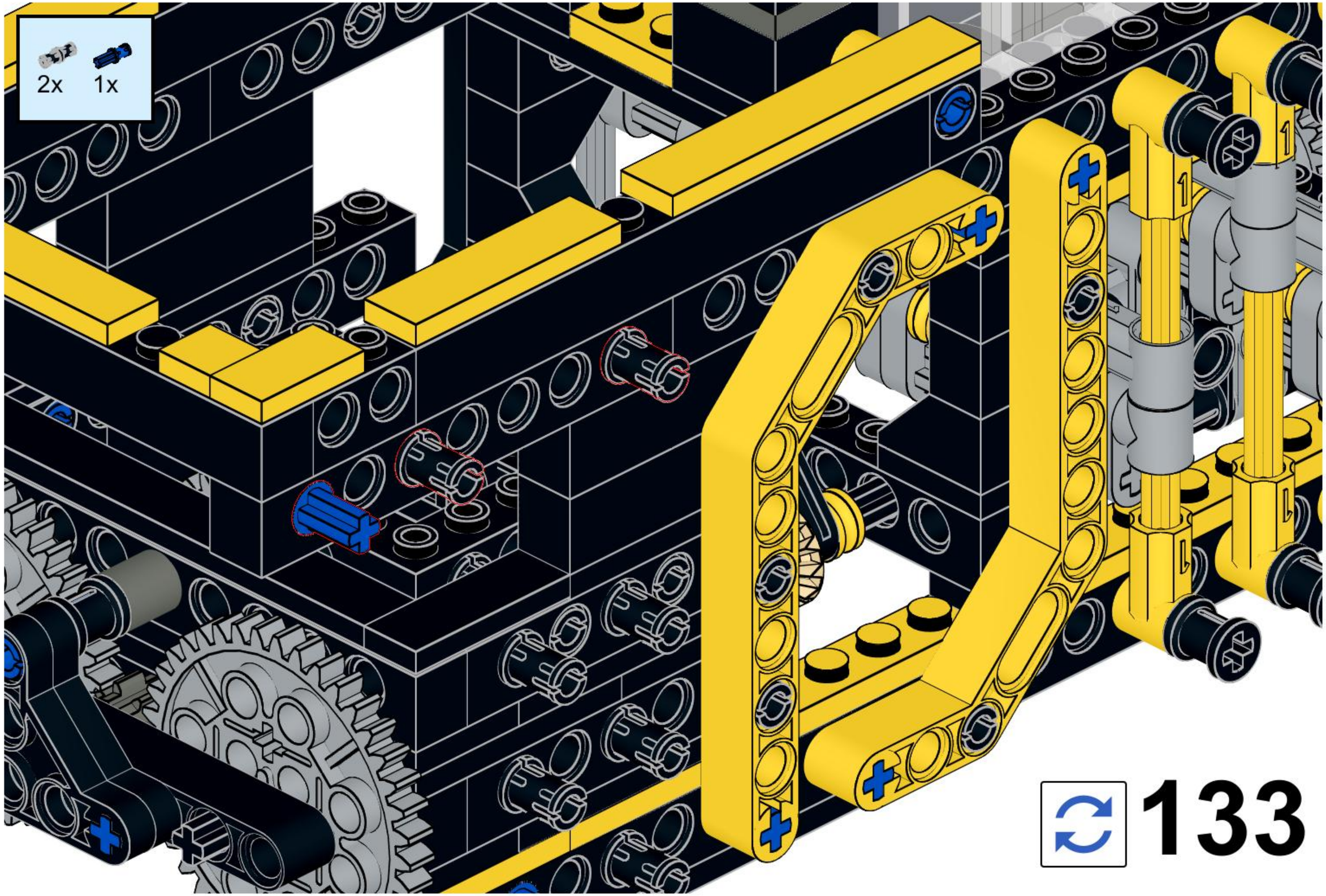
2x
1x
1
1
133

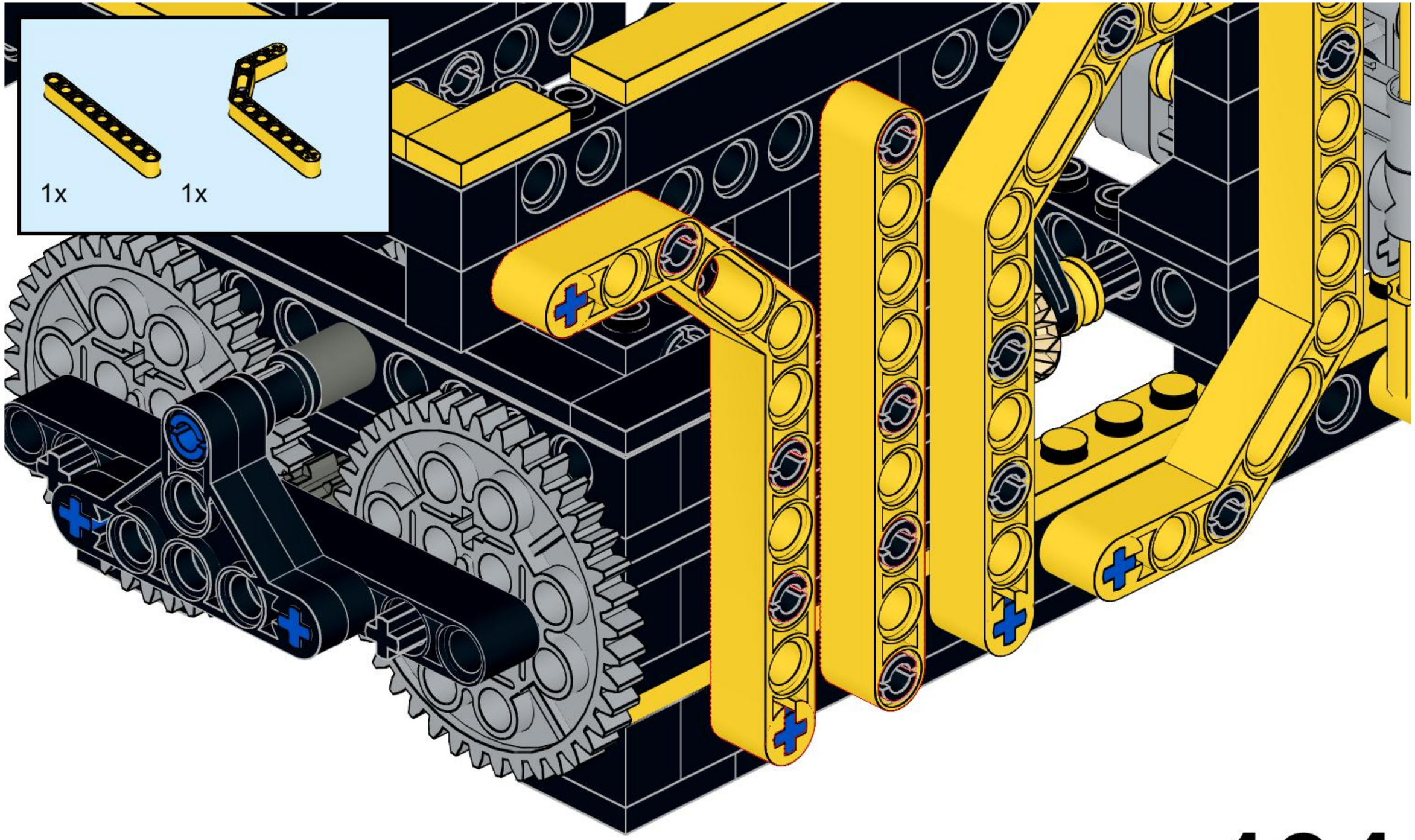
1x
1x

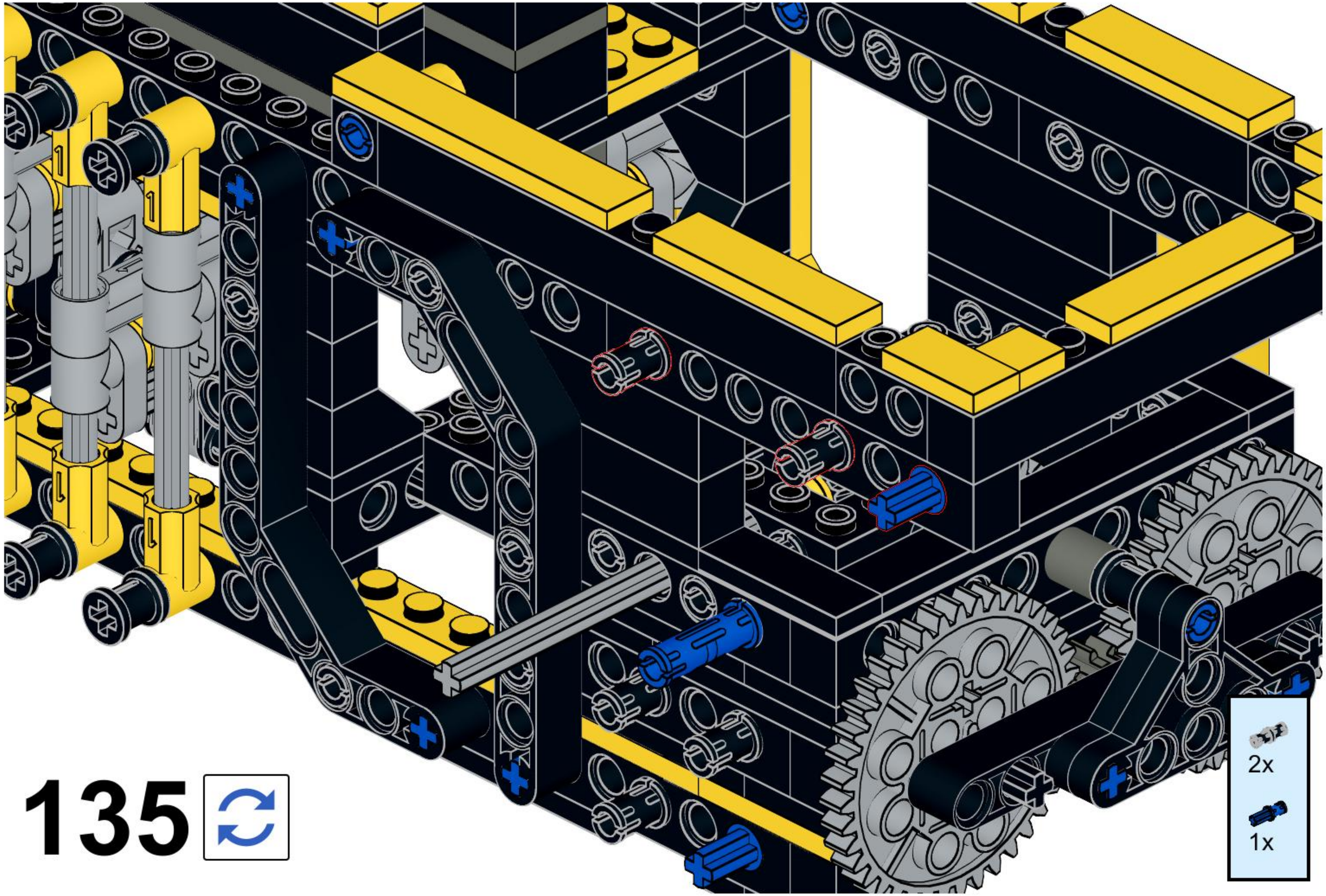

135

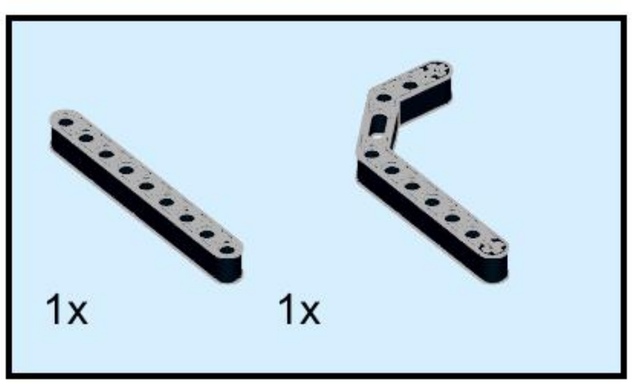
1x
1x

137

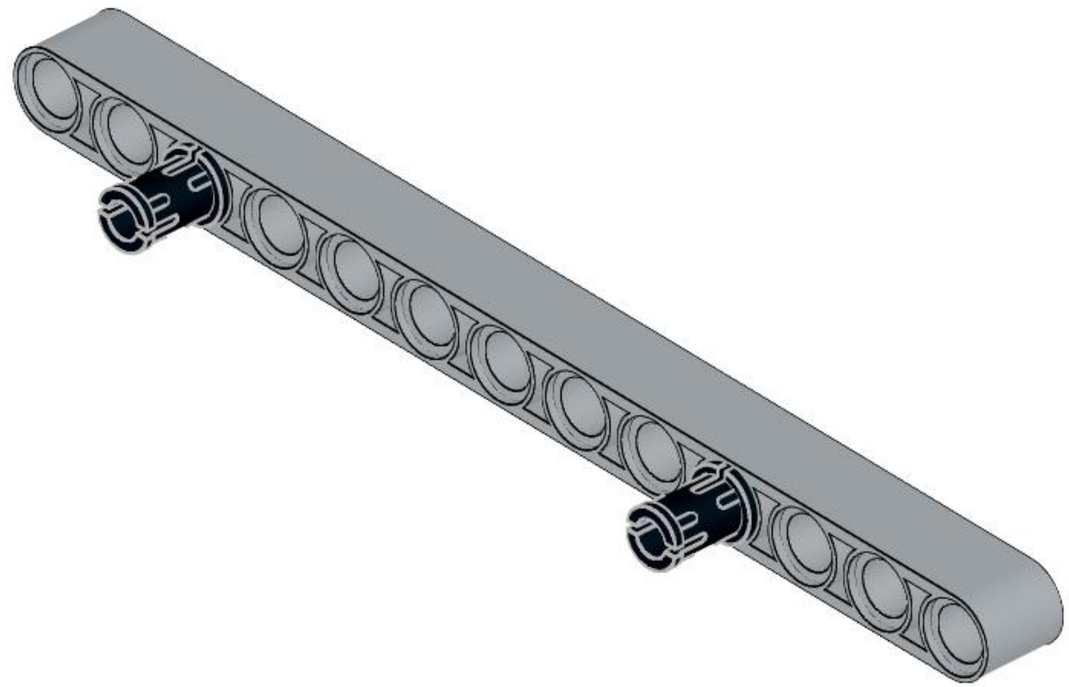

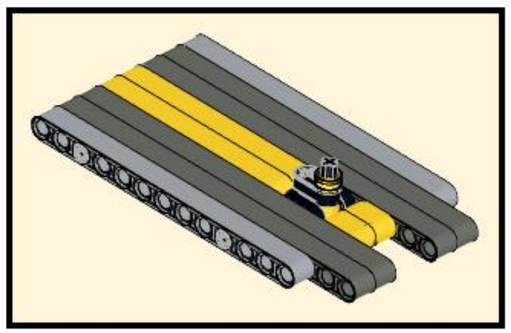

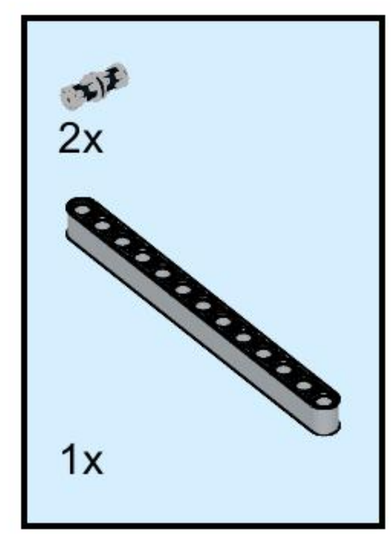

138

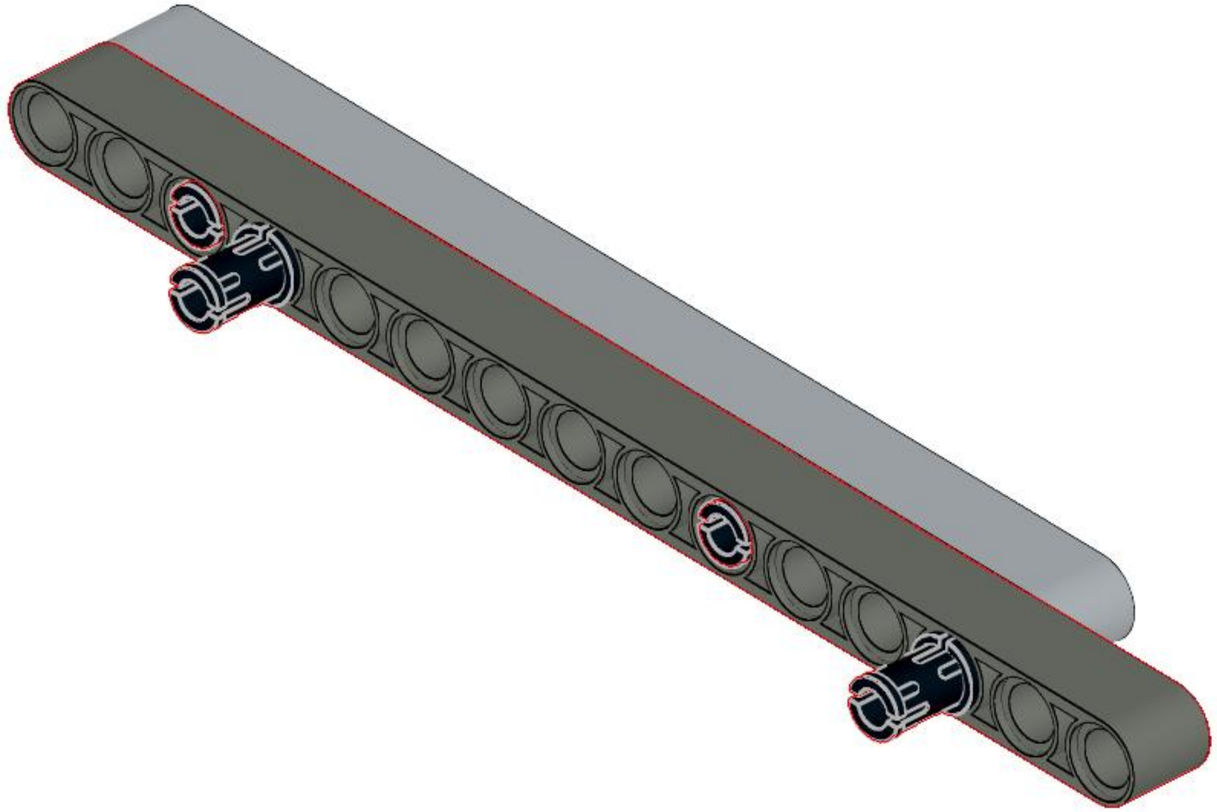

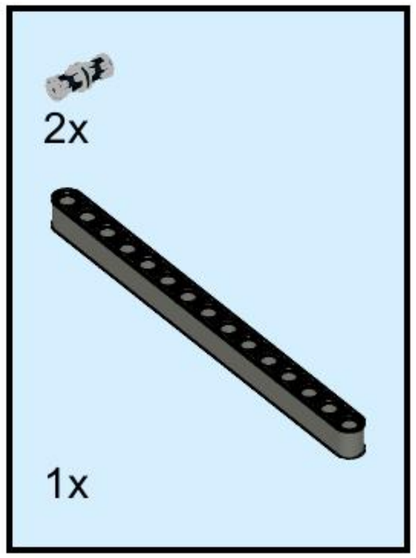

139

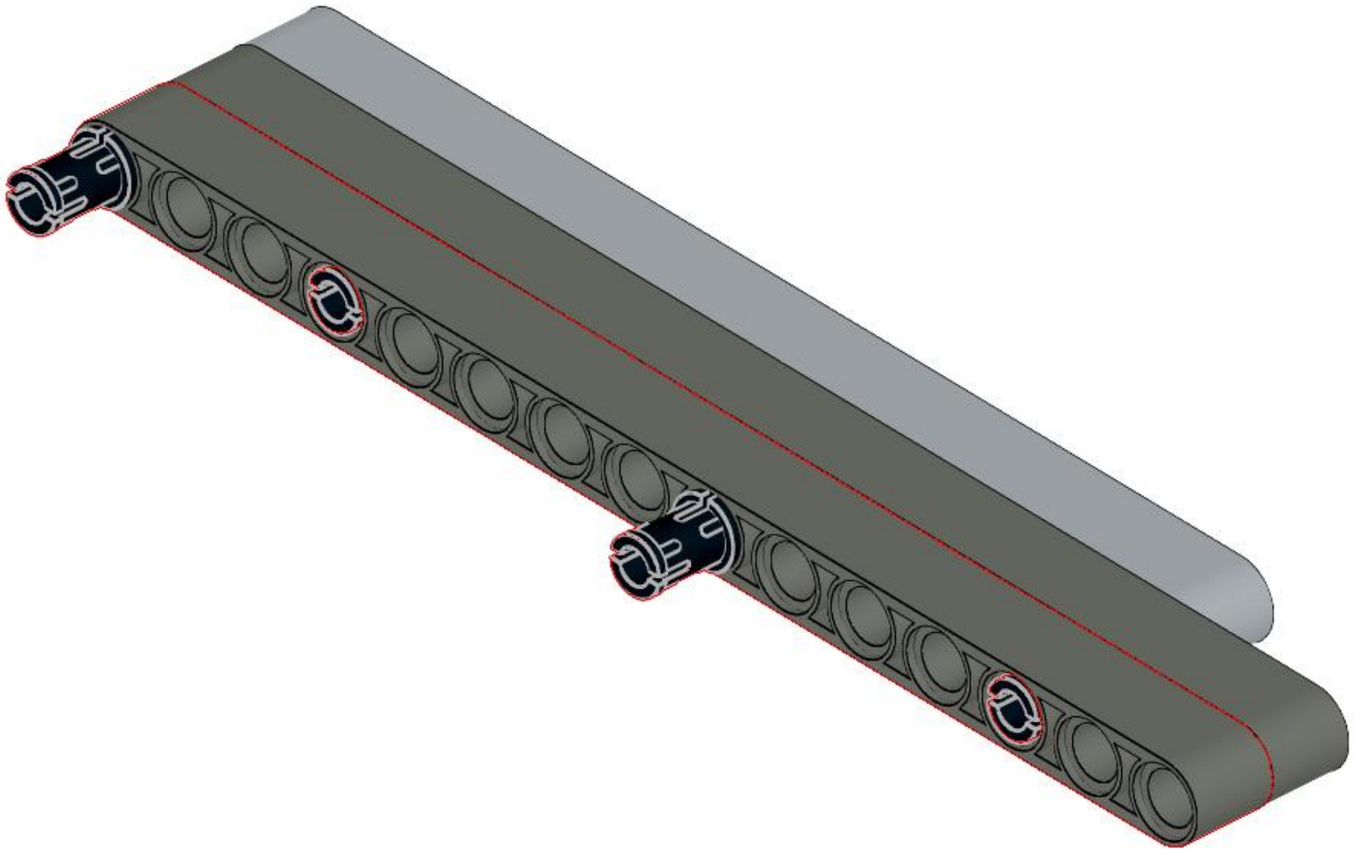

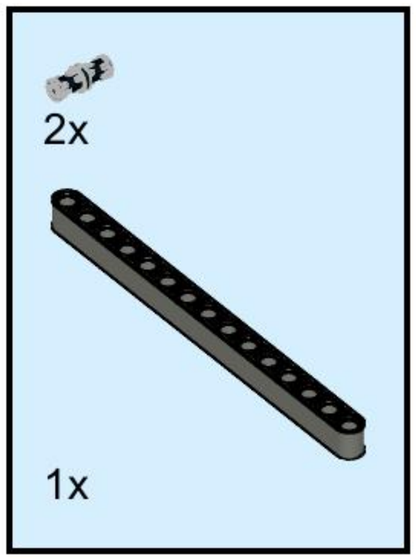

140

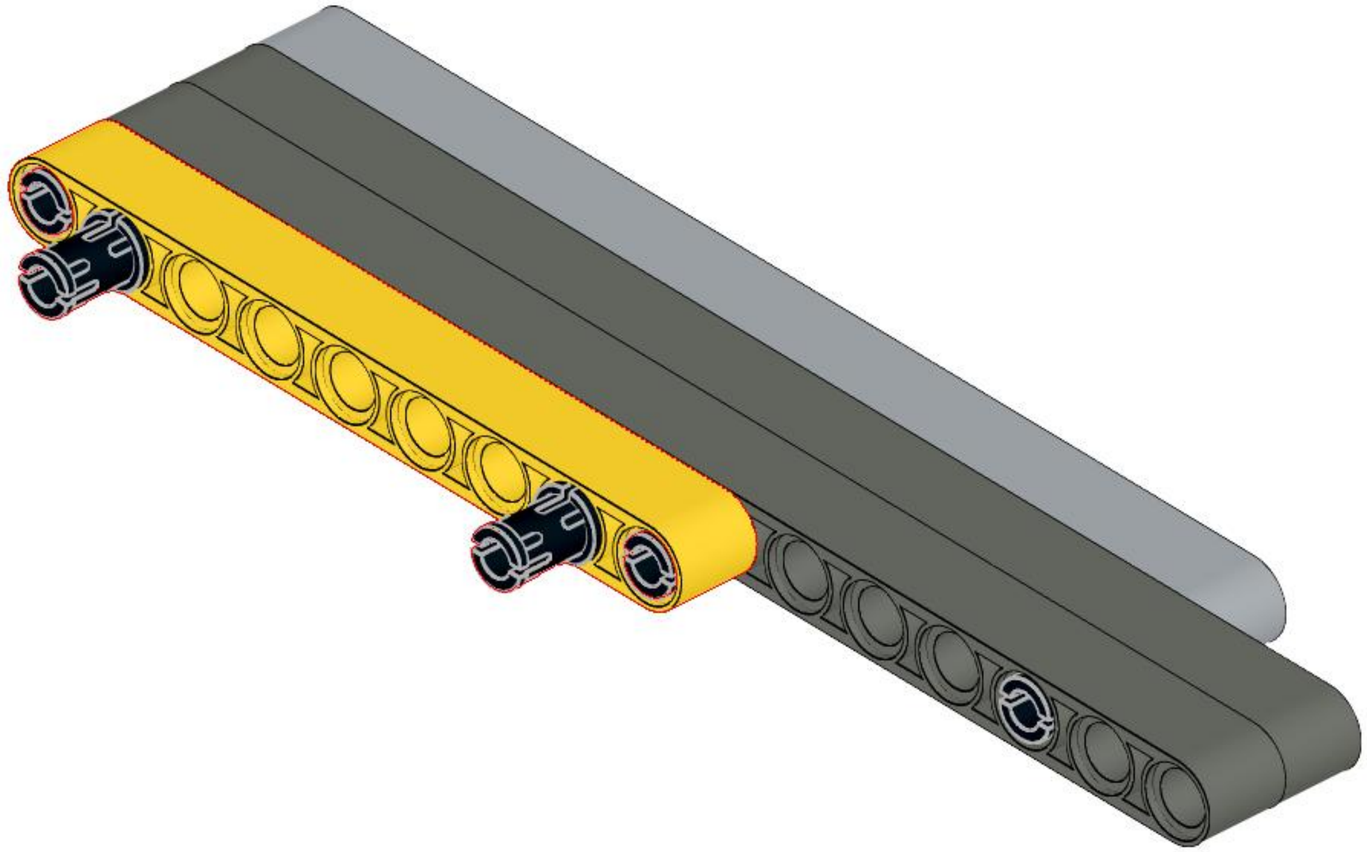

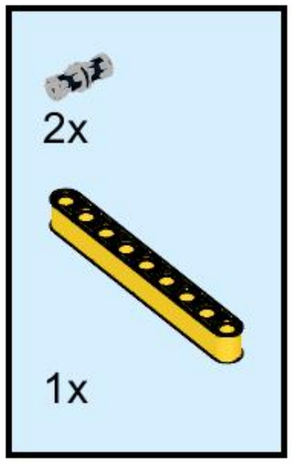

141

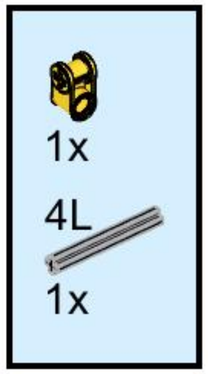

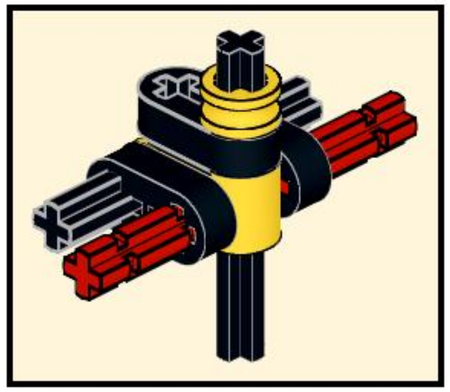

142

143

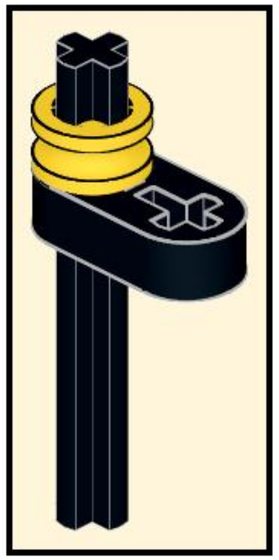

144

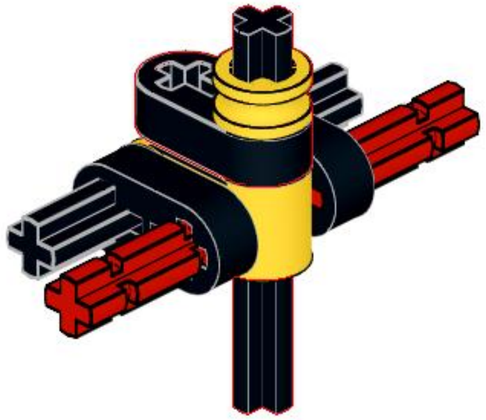

145

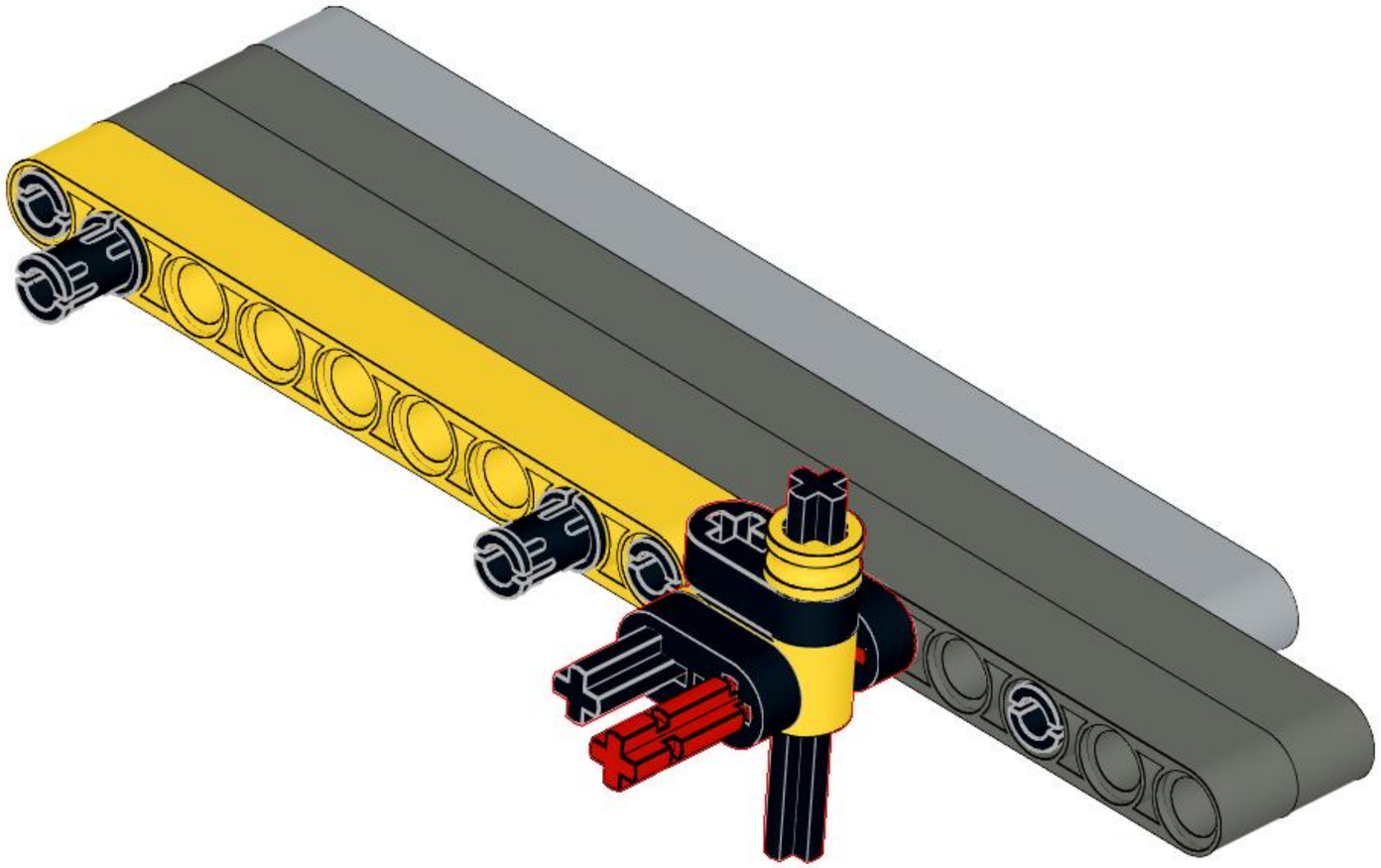

146

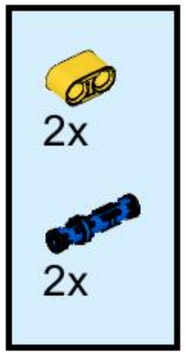

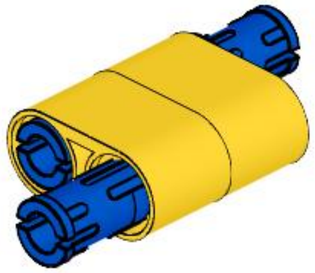

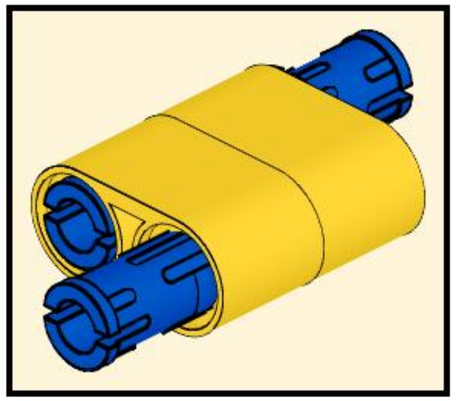

147

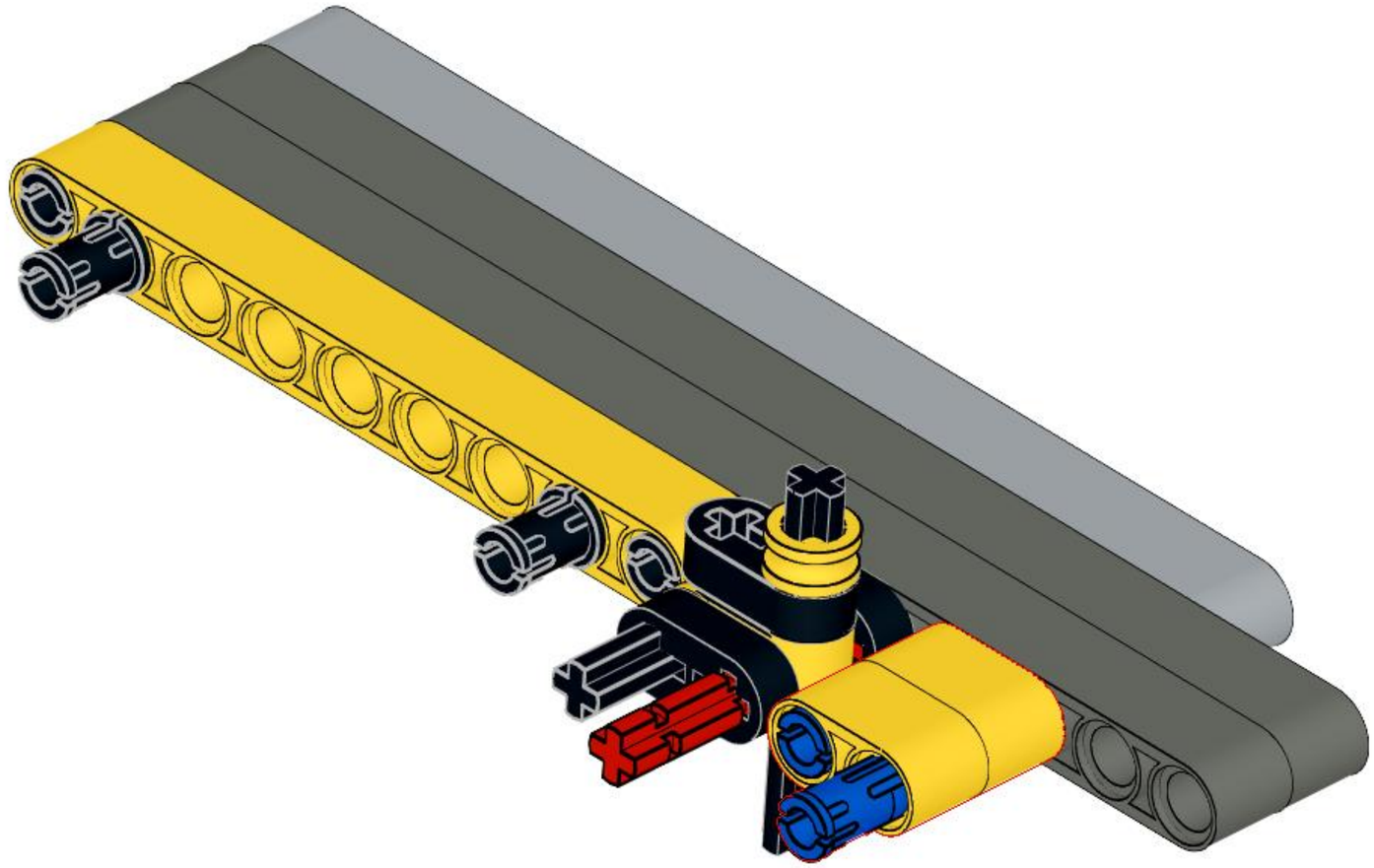

148

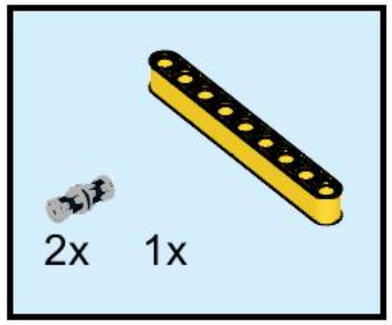

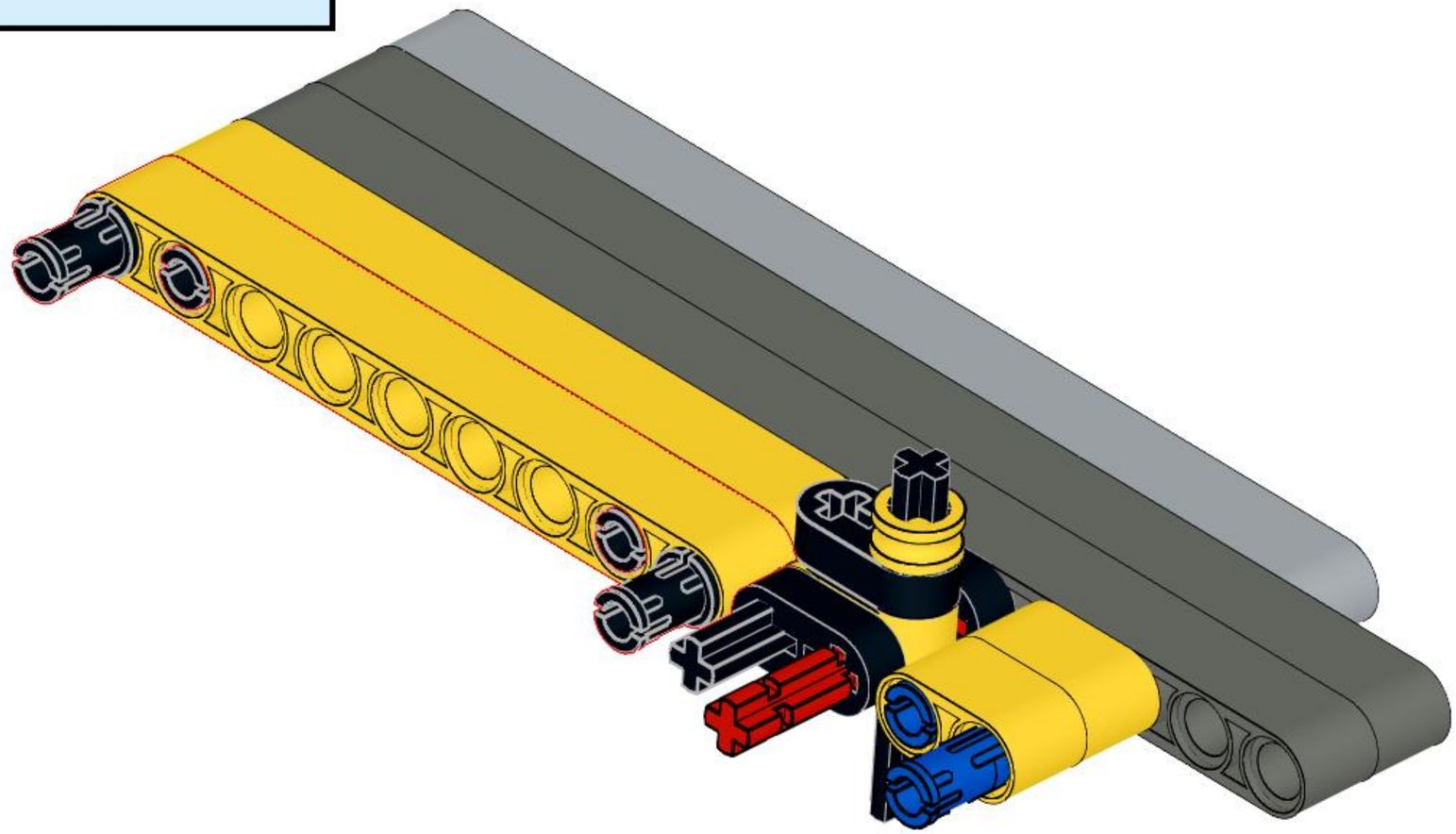

149

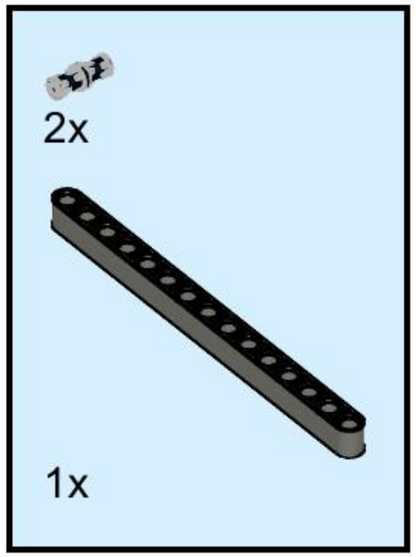

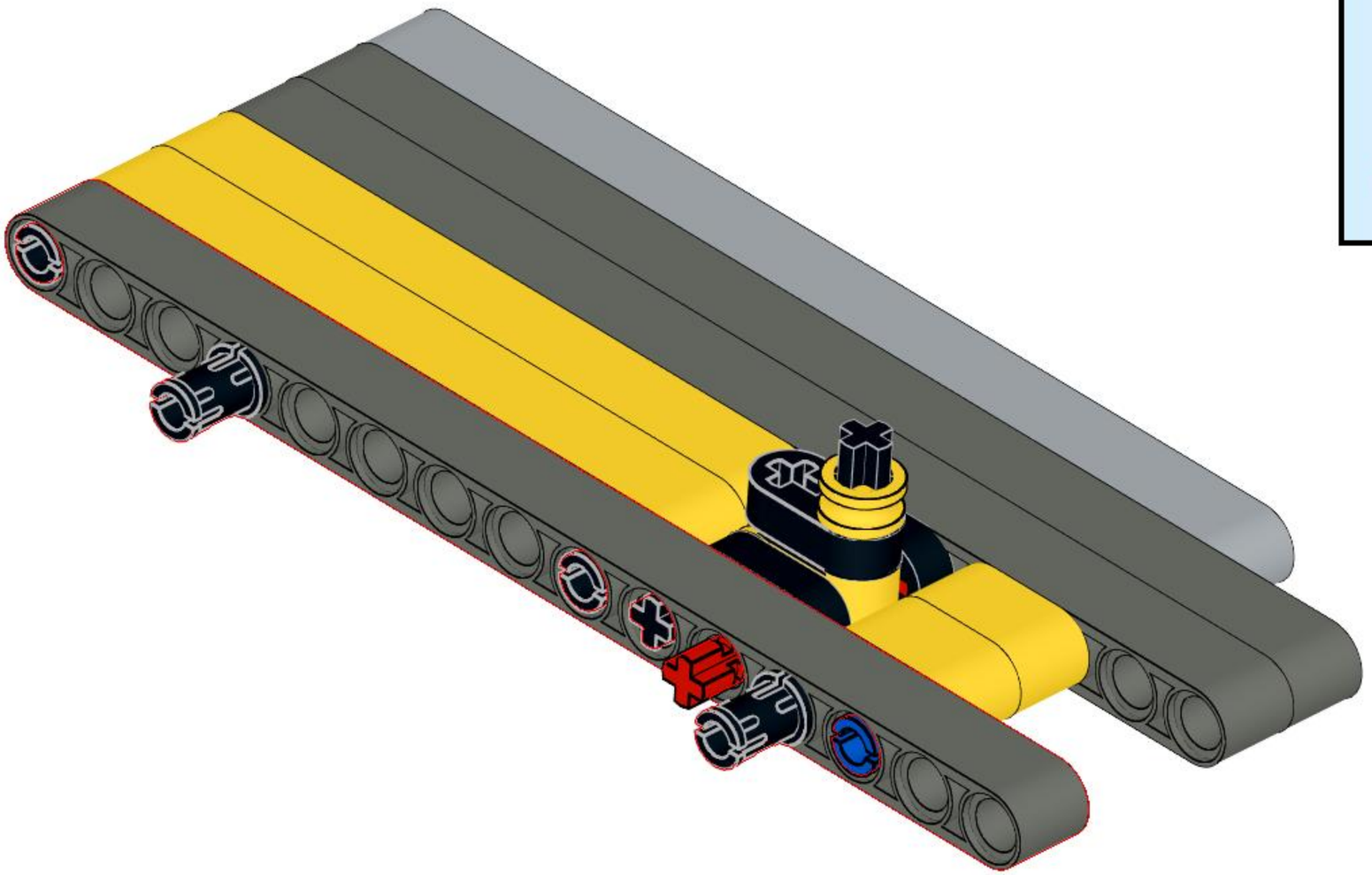

150

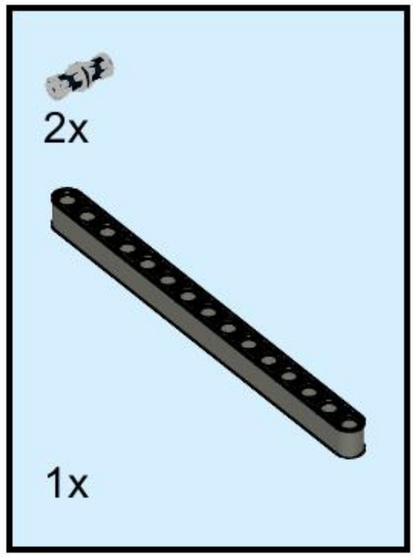

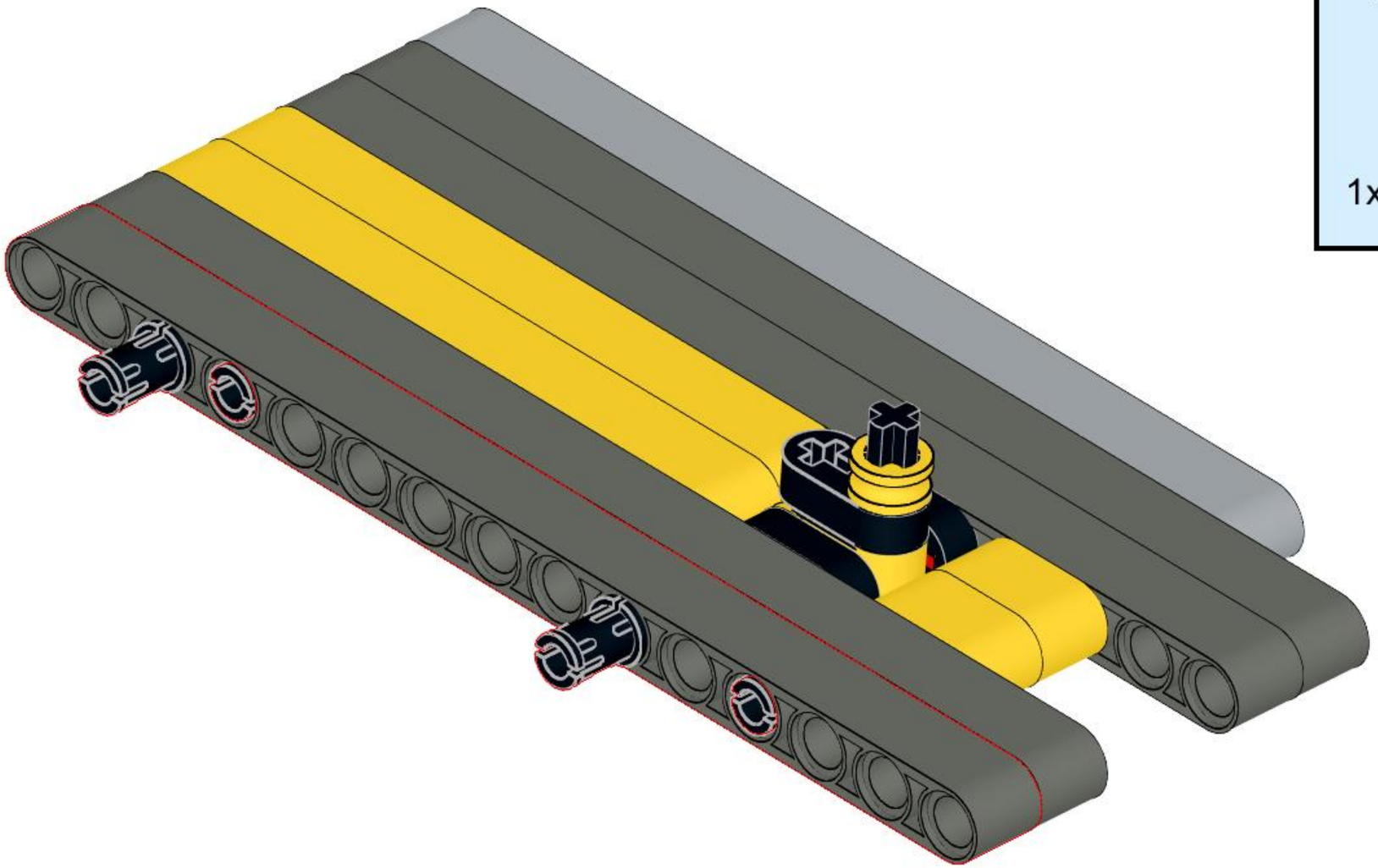

151

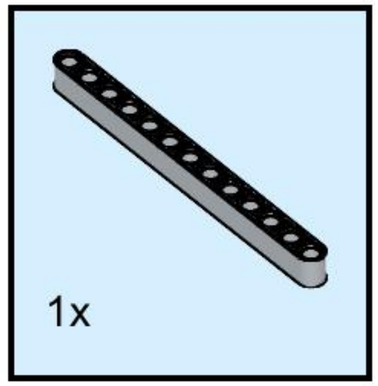

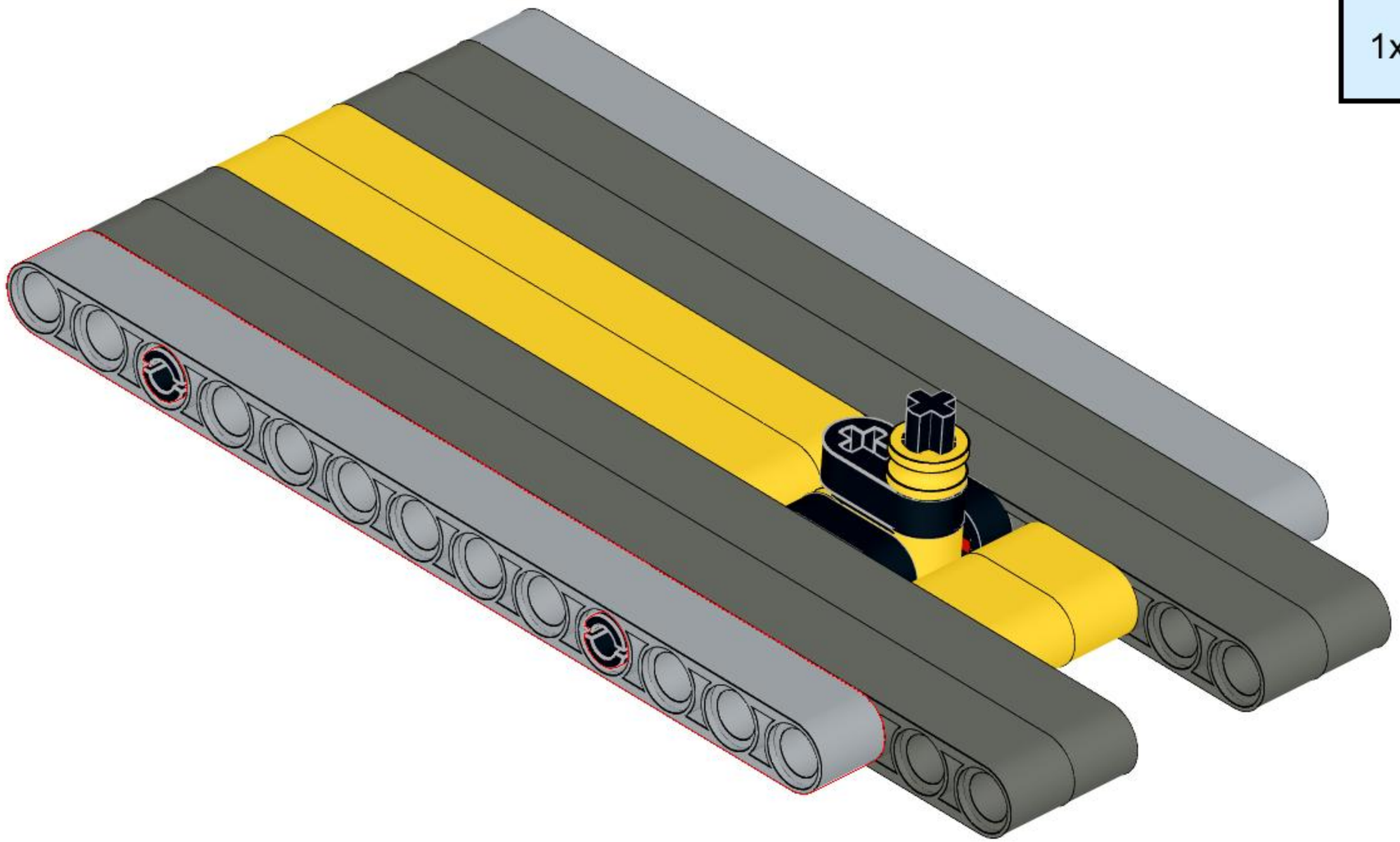

152

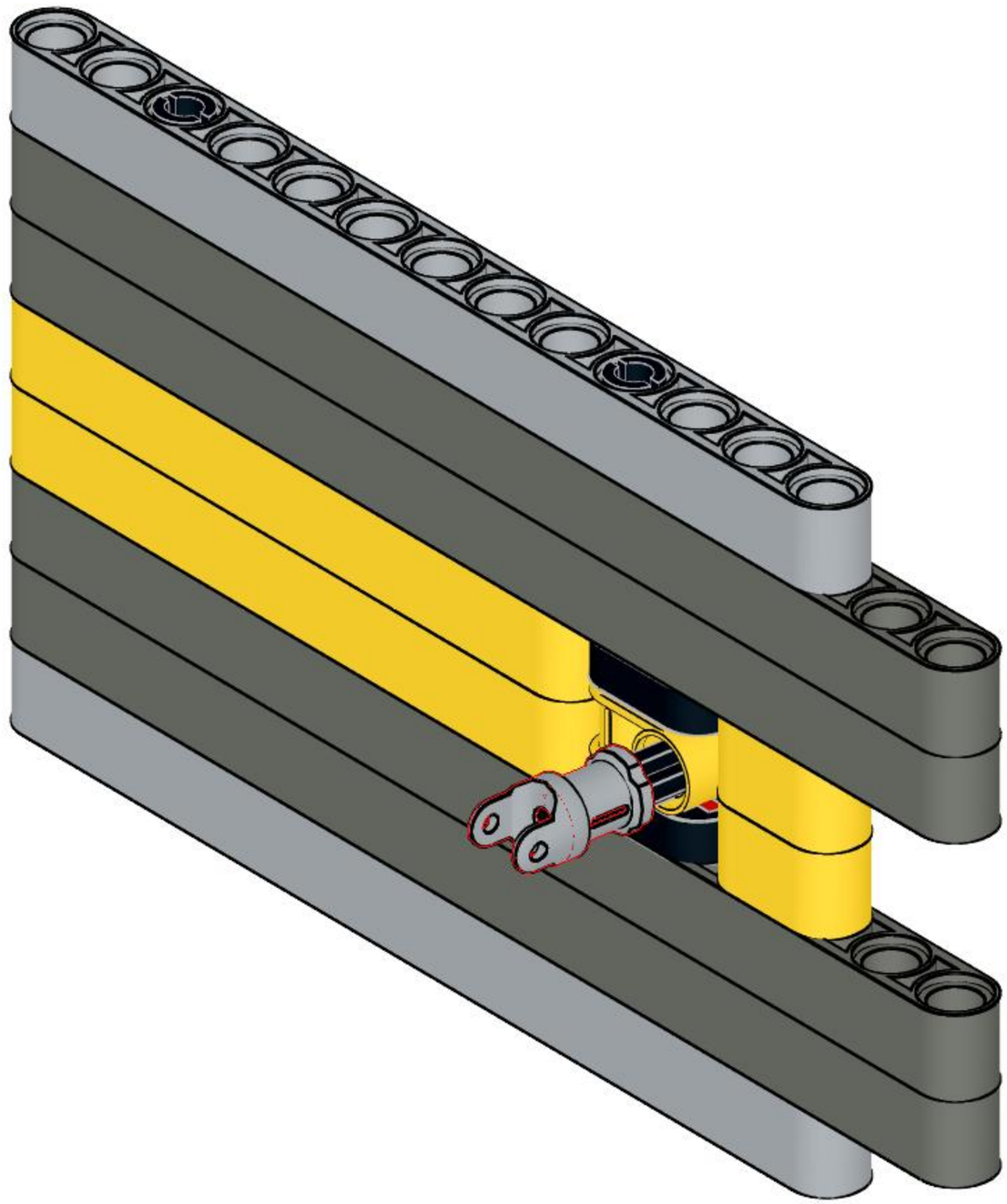

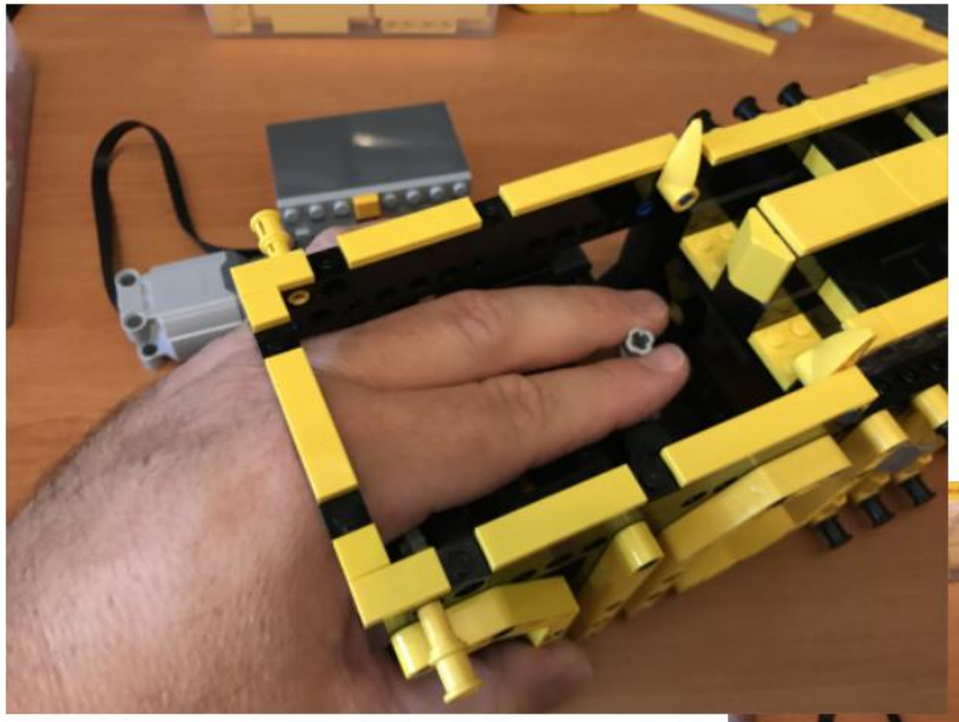

Installing the agitator in the next step of the instructions can be fiddly. Hold the complete universal joint as shown, then slide the input tray into place. Finally, insert the agitator through the hole and connect it to the universal joint.

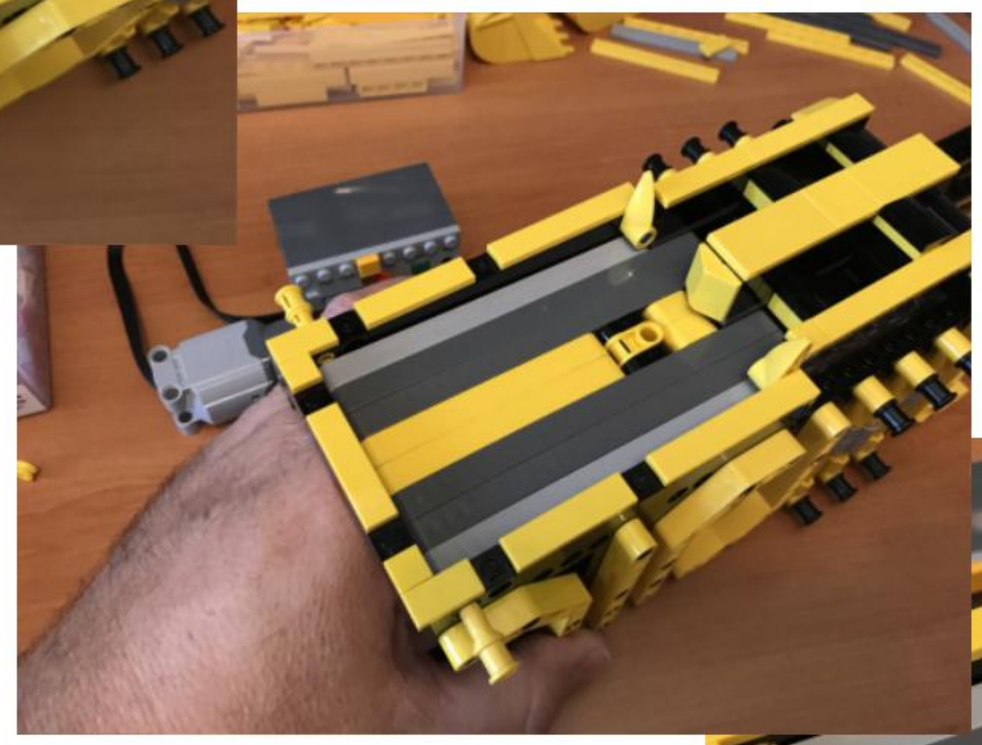

153

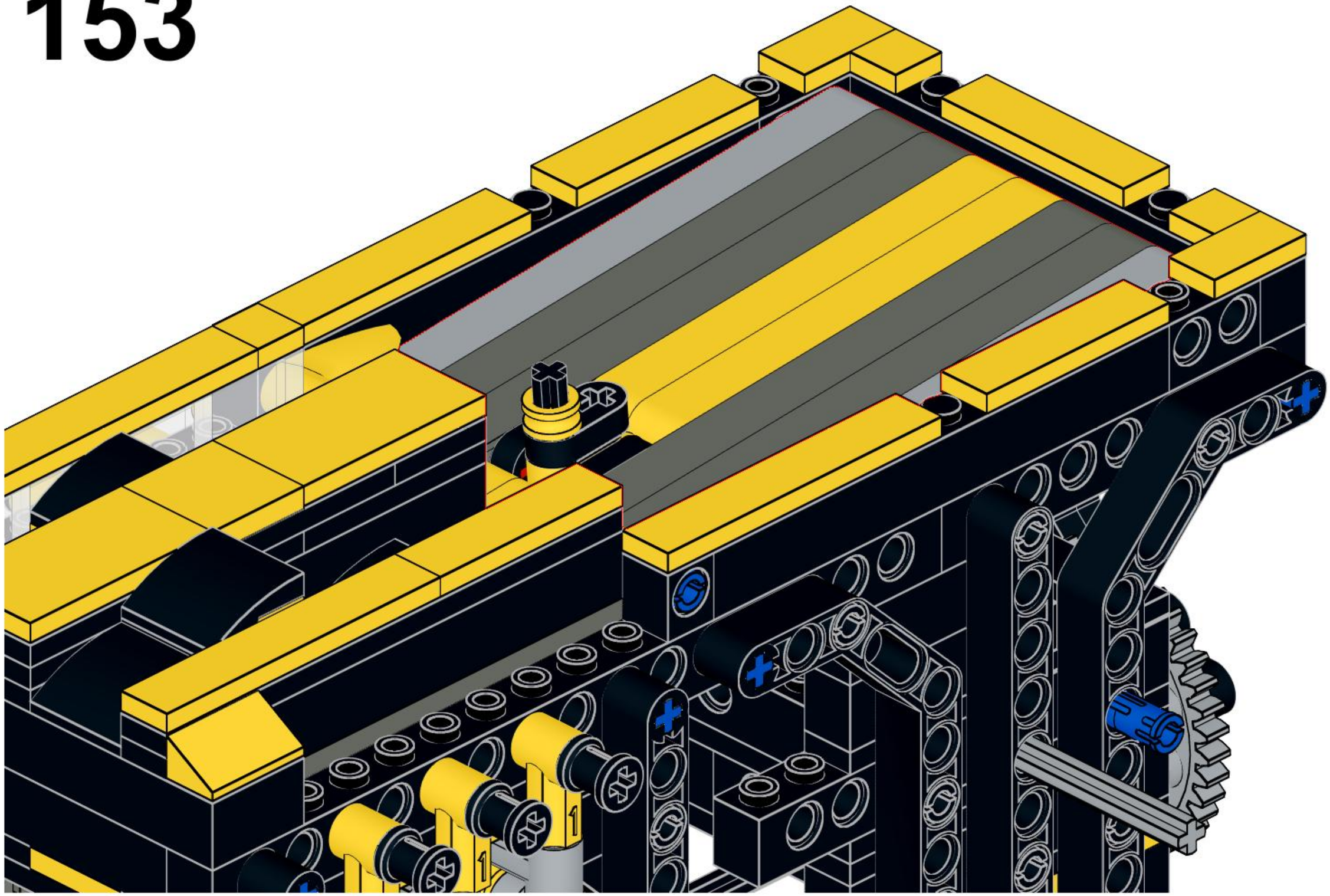

154

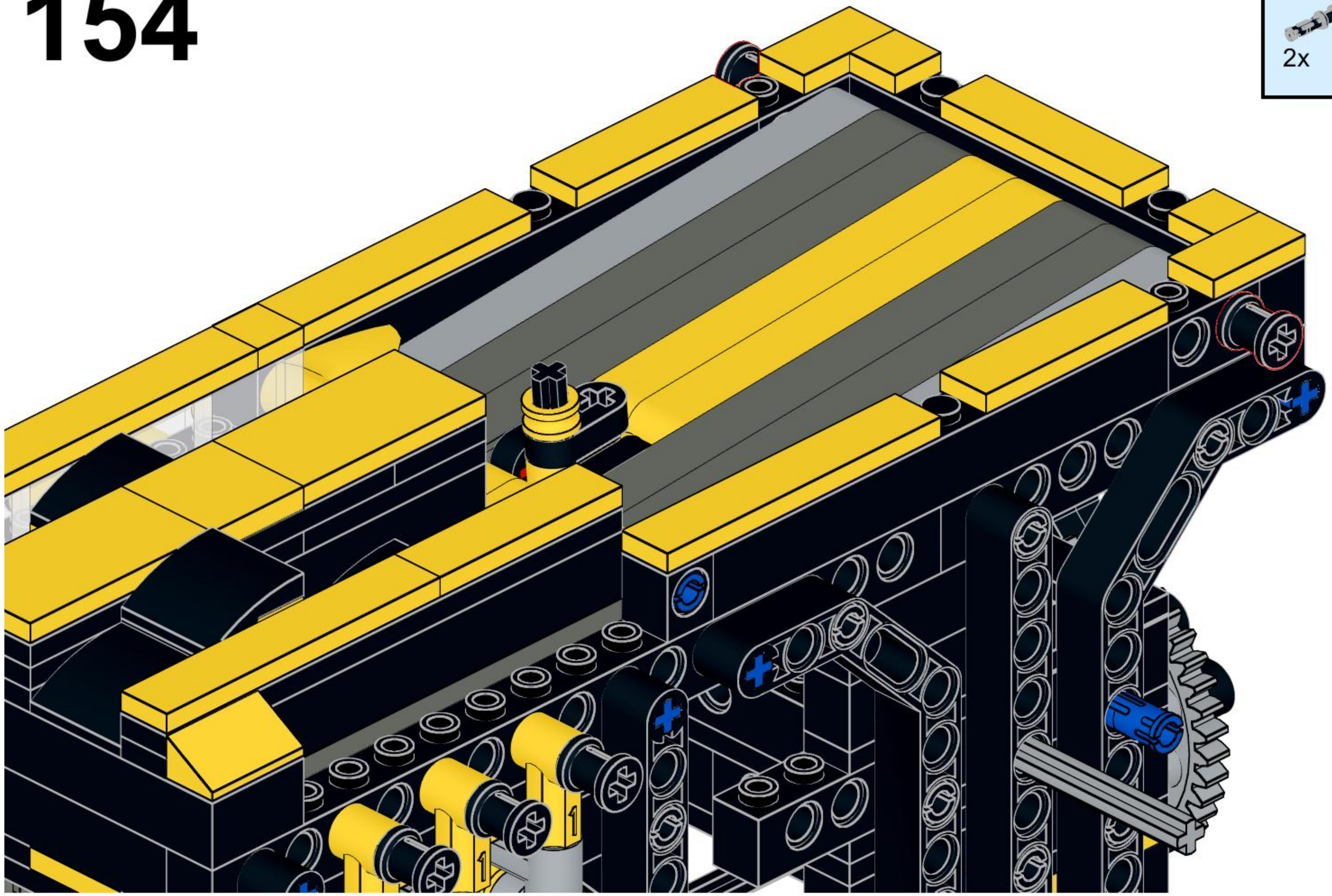

155

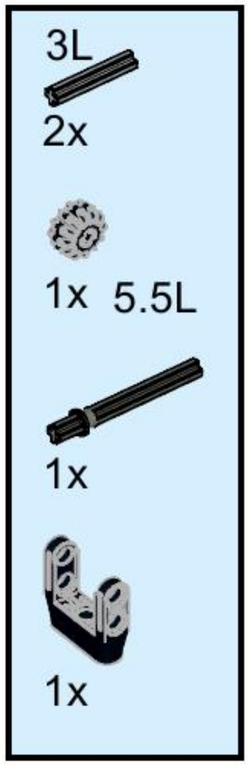

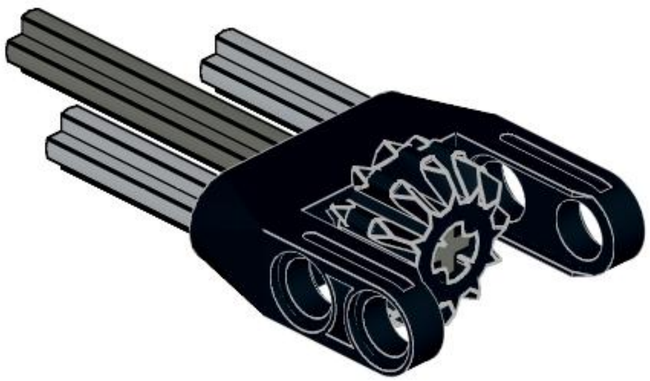

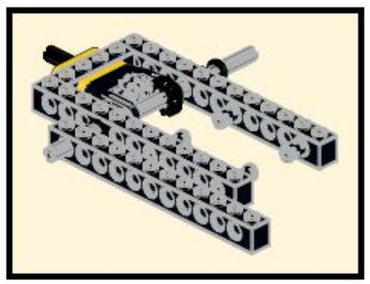

156

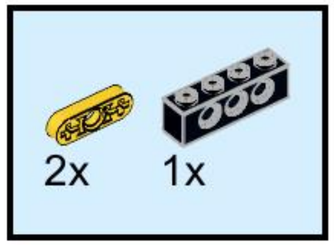

157

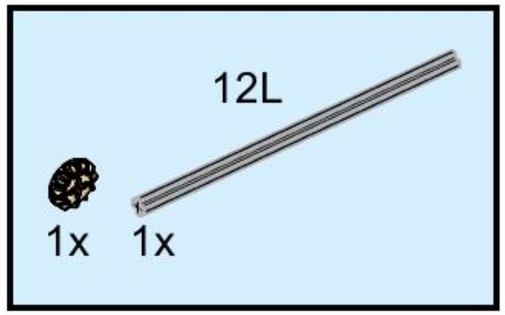

To position the bucket correctly to catch the balls as they fall from the steps, the tan bevel gear and the black bevel gear must align together with both axles being vertical/horizontal. If they are not, the timing will be wrong.

Correcting a mis-alignment of these two axles is very time consuming. Make sure it is correct now.

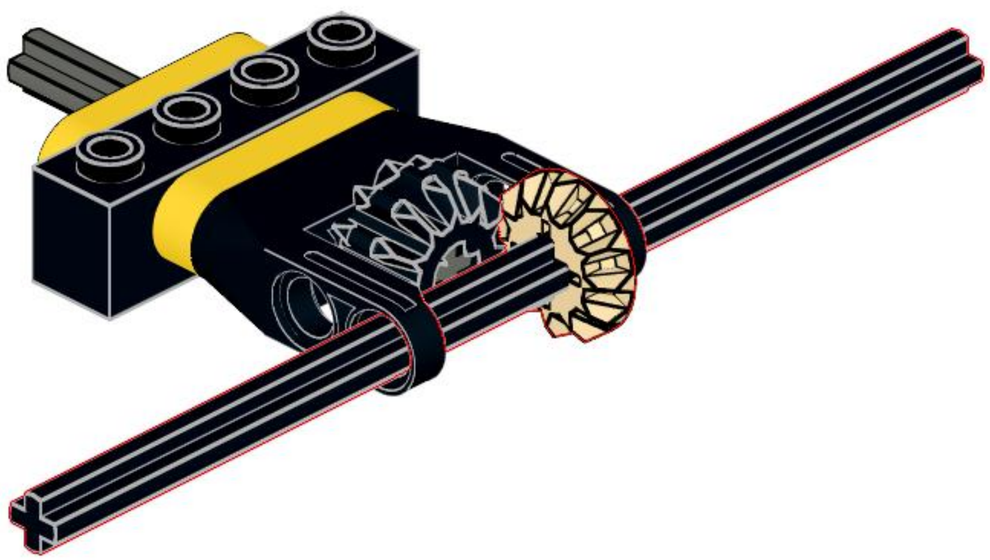

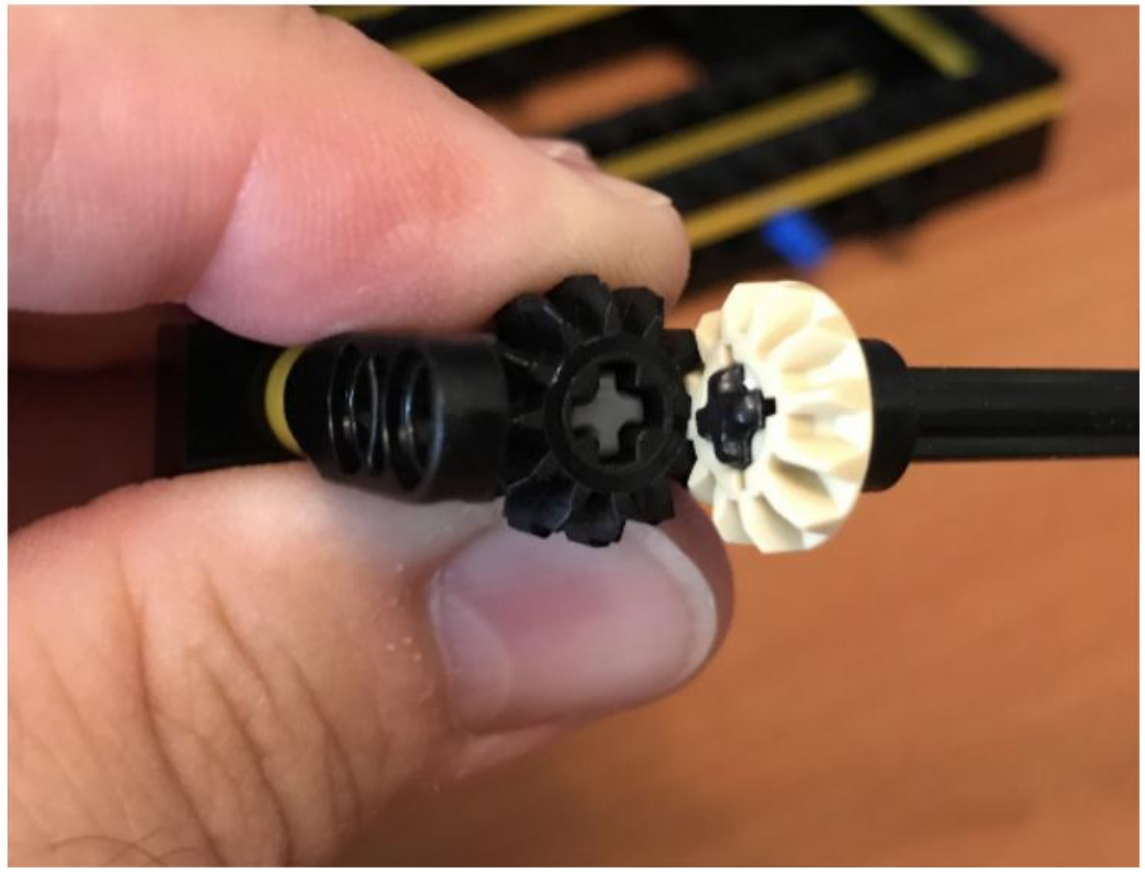

158

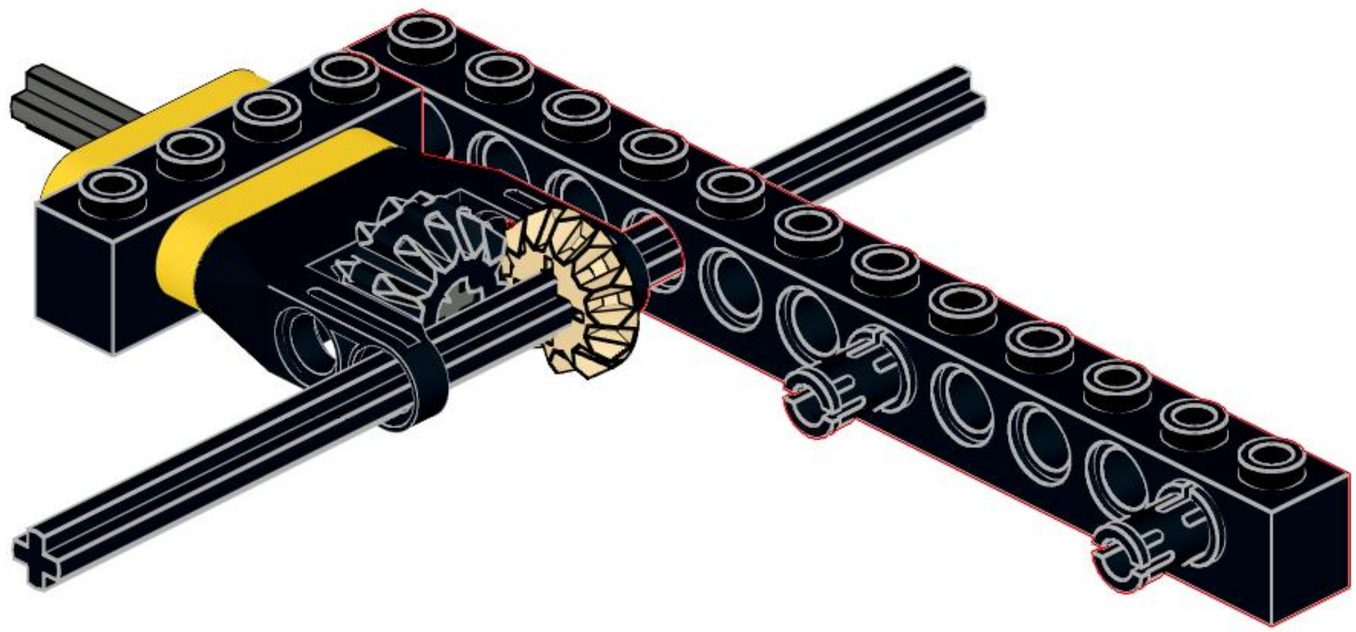

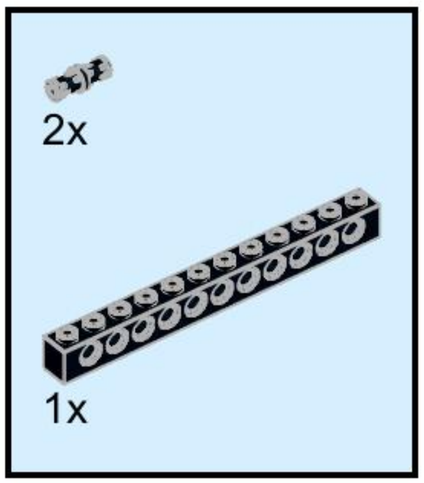

159

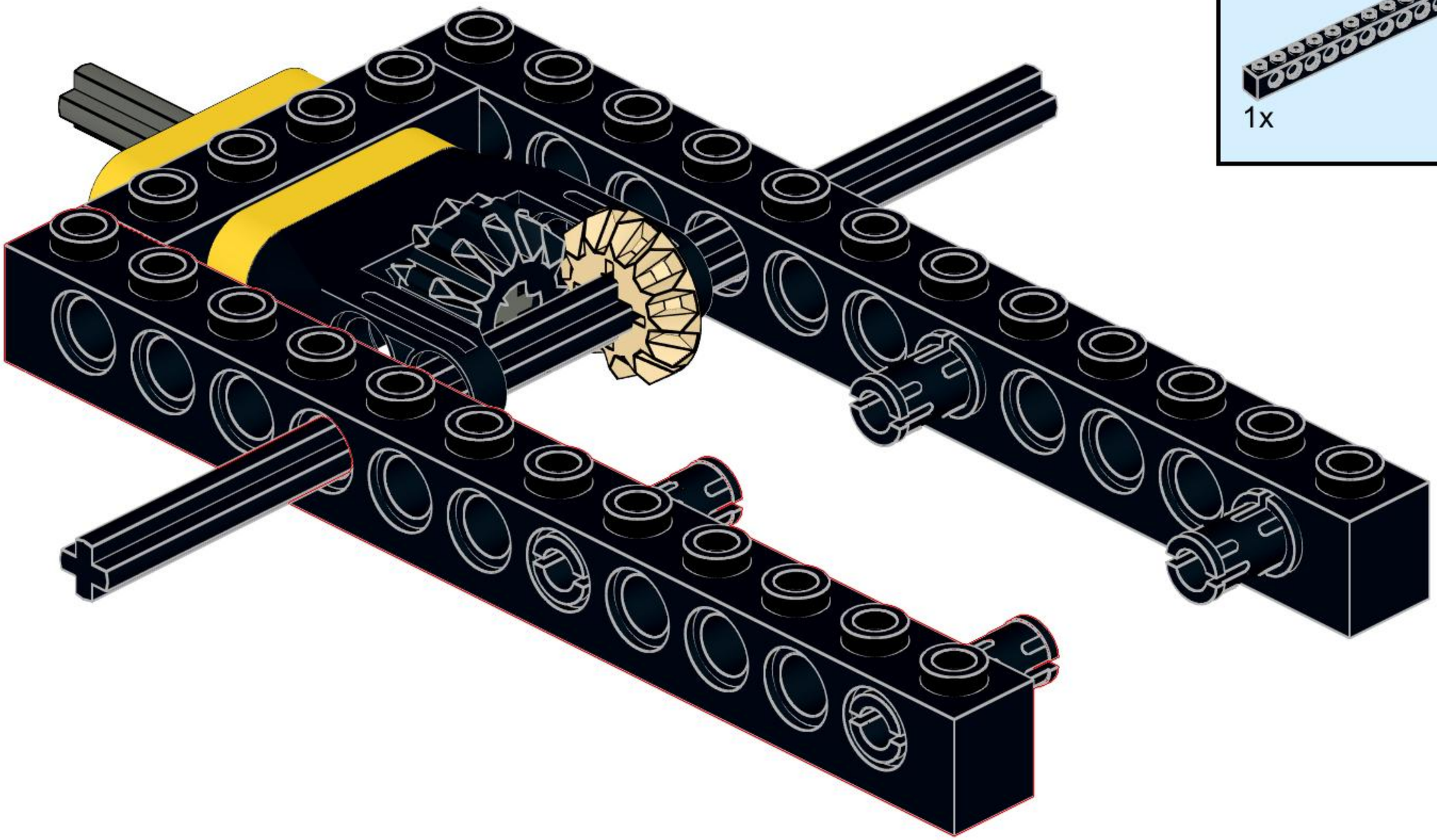

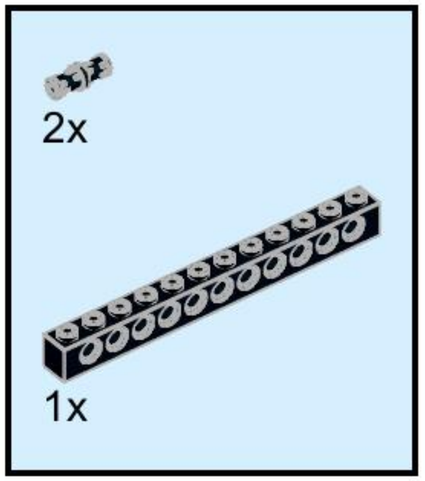

160

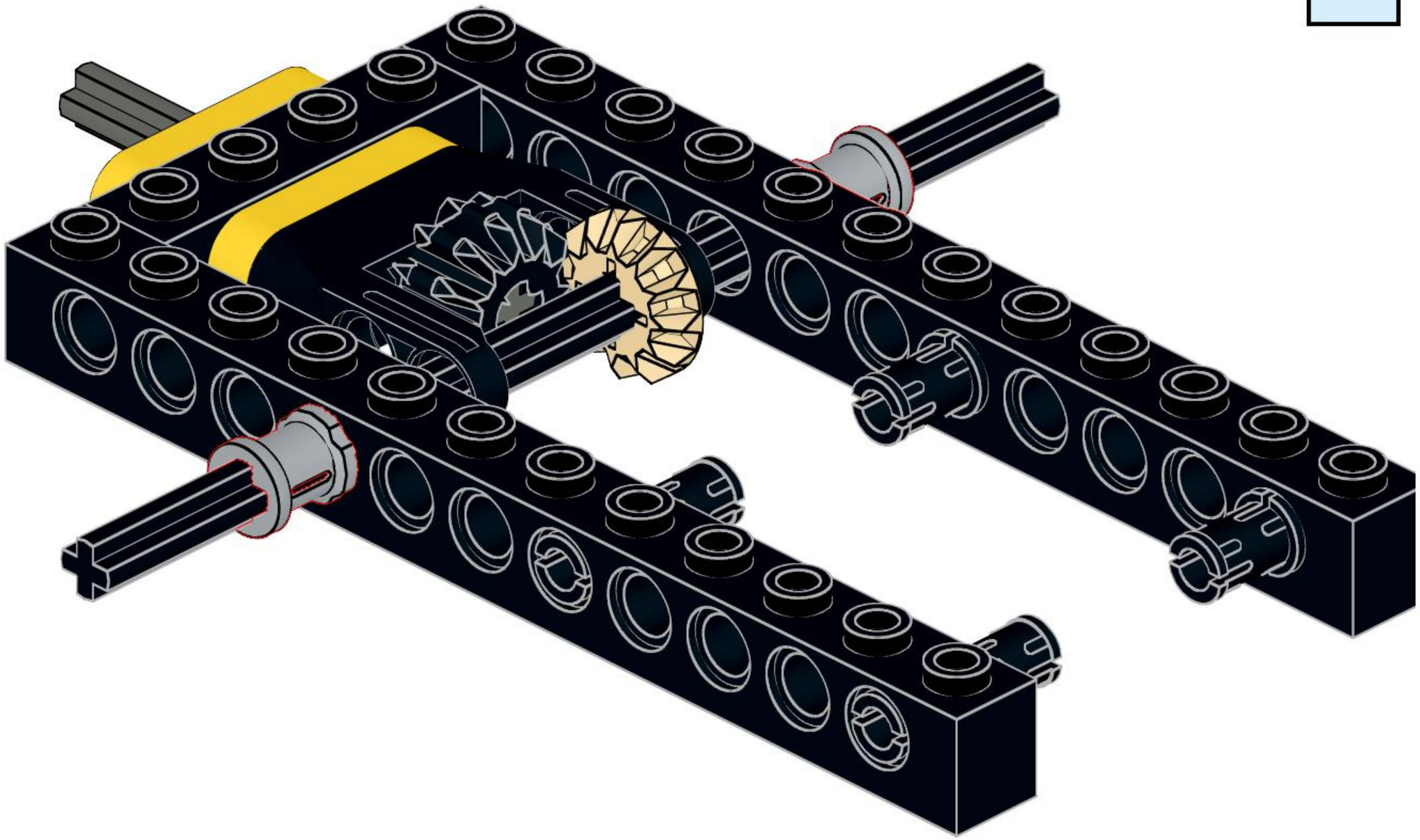

2x

161

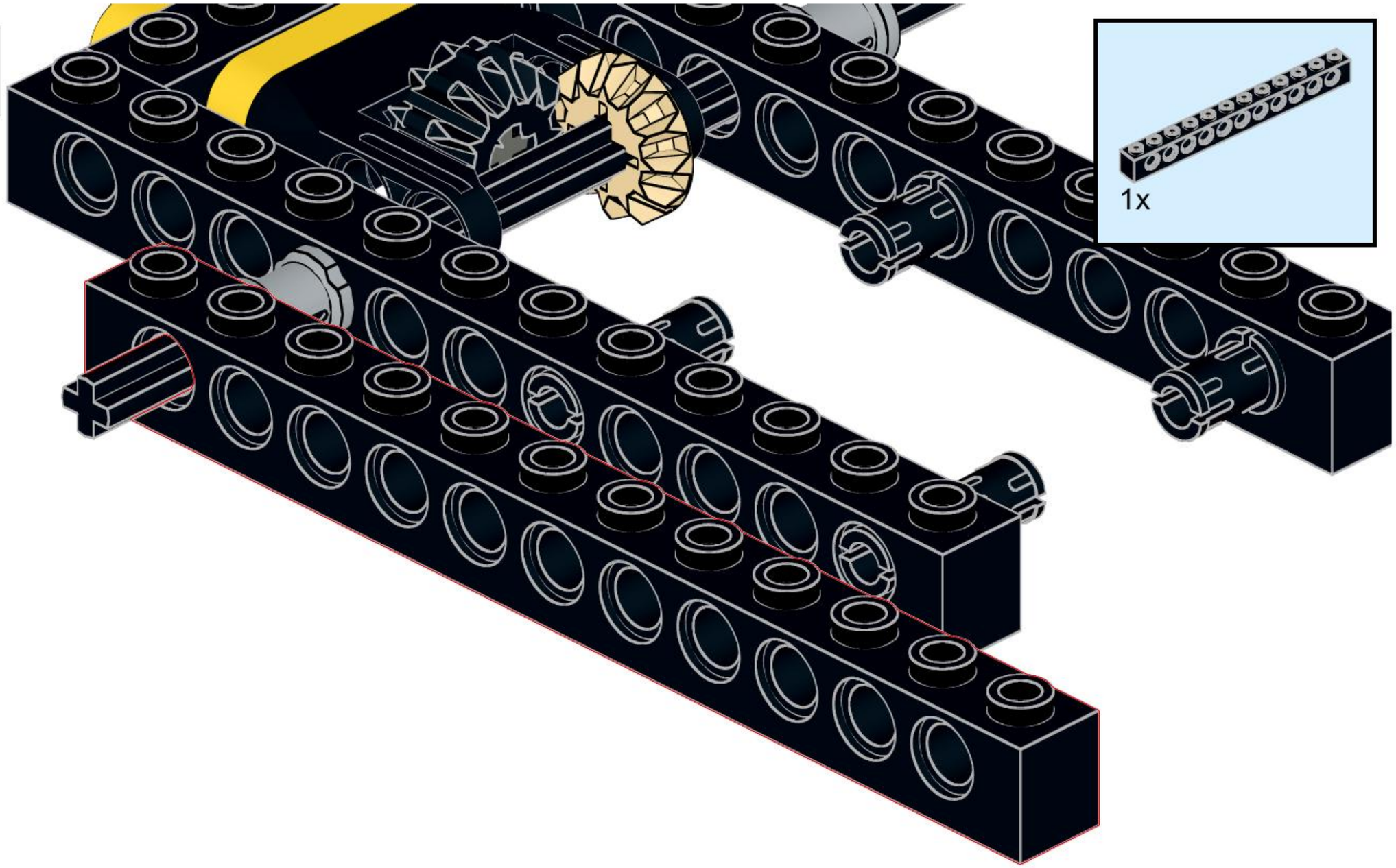

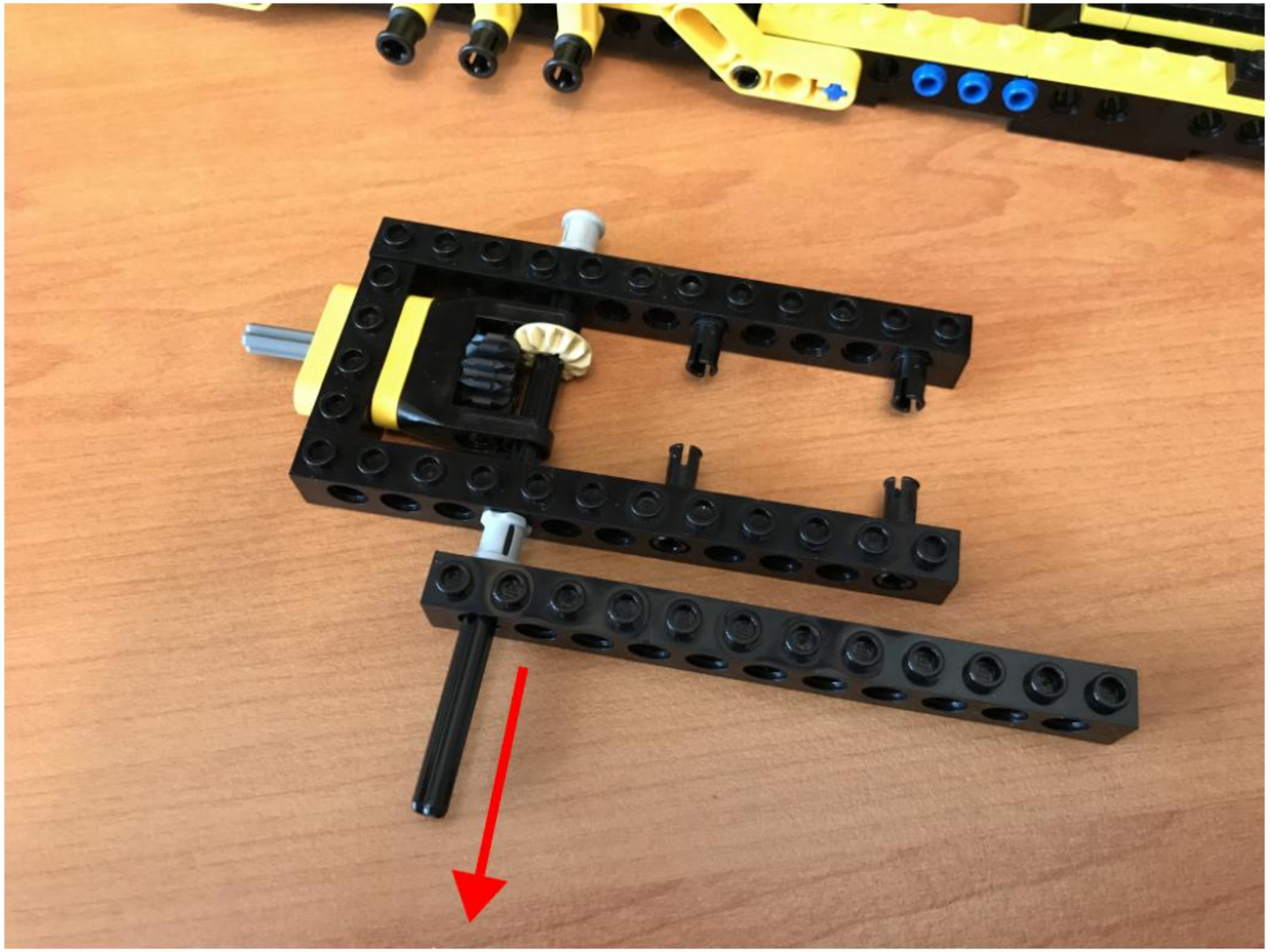

To attach this assembly to the rest of the module in the next step, slide the black axle across as shown above Then, insert the grey axle into the yellow connector and press everything into place. Finally, slide the black axle back to its centred position.

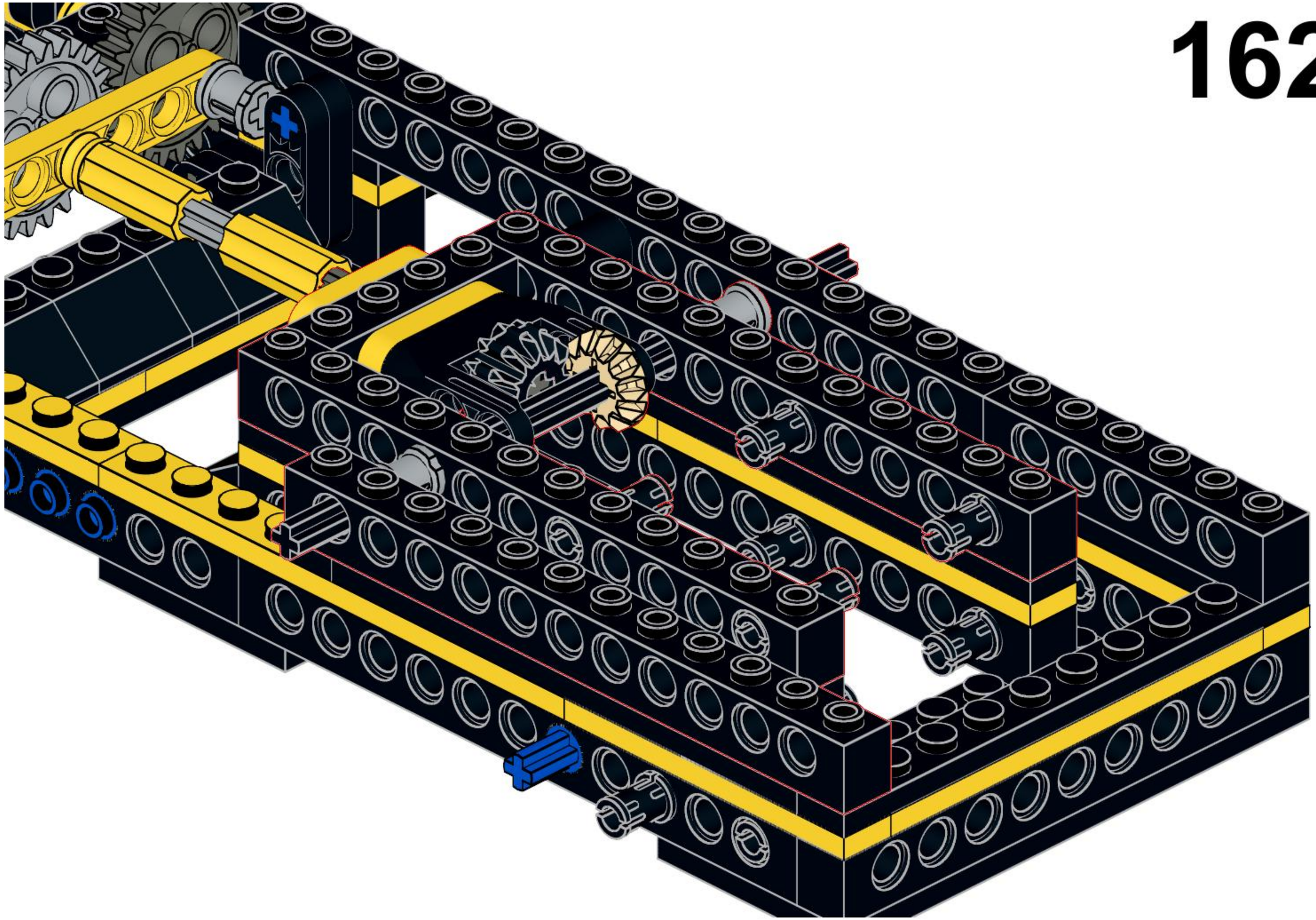

163

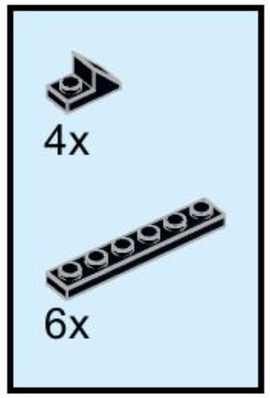

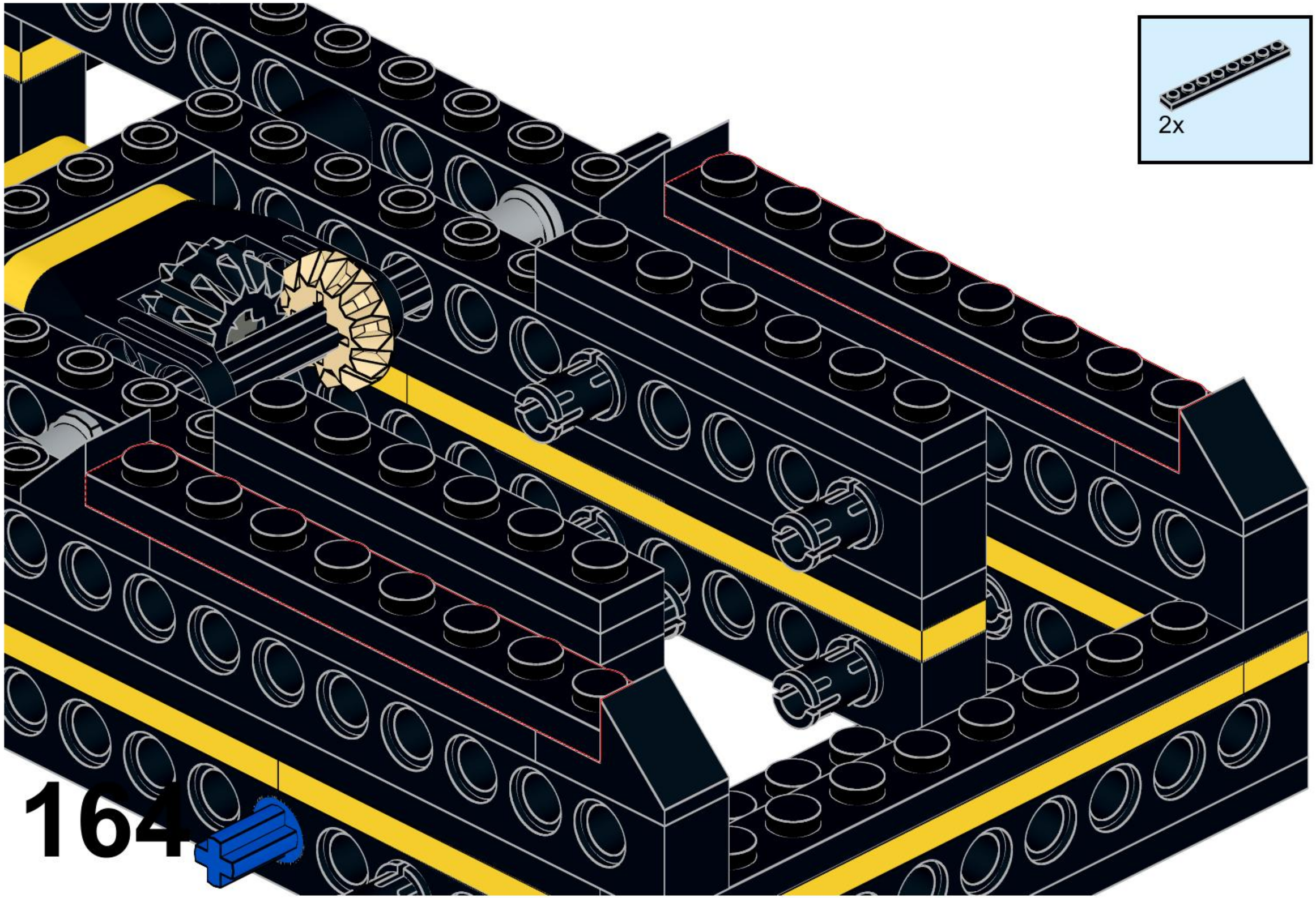
2x
164

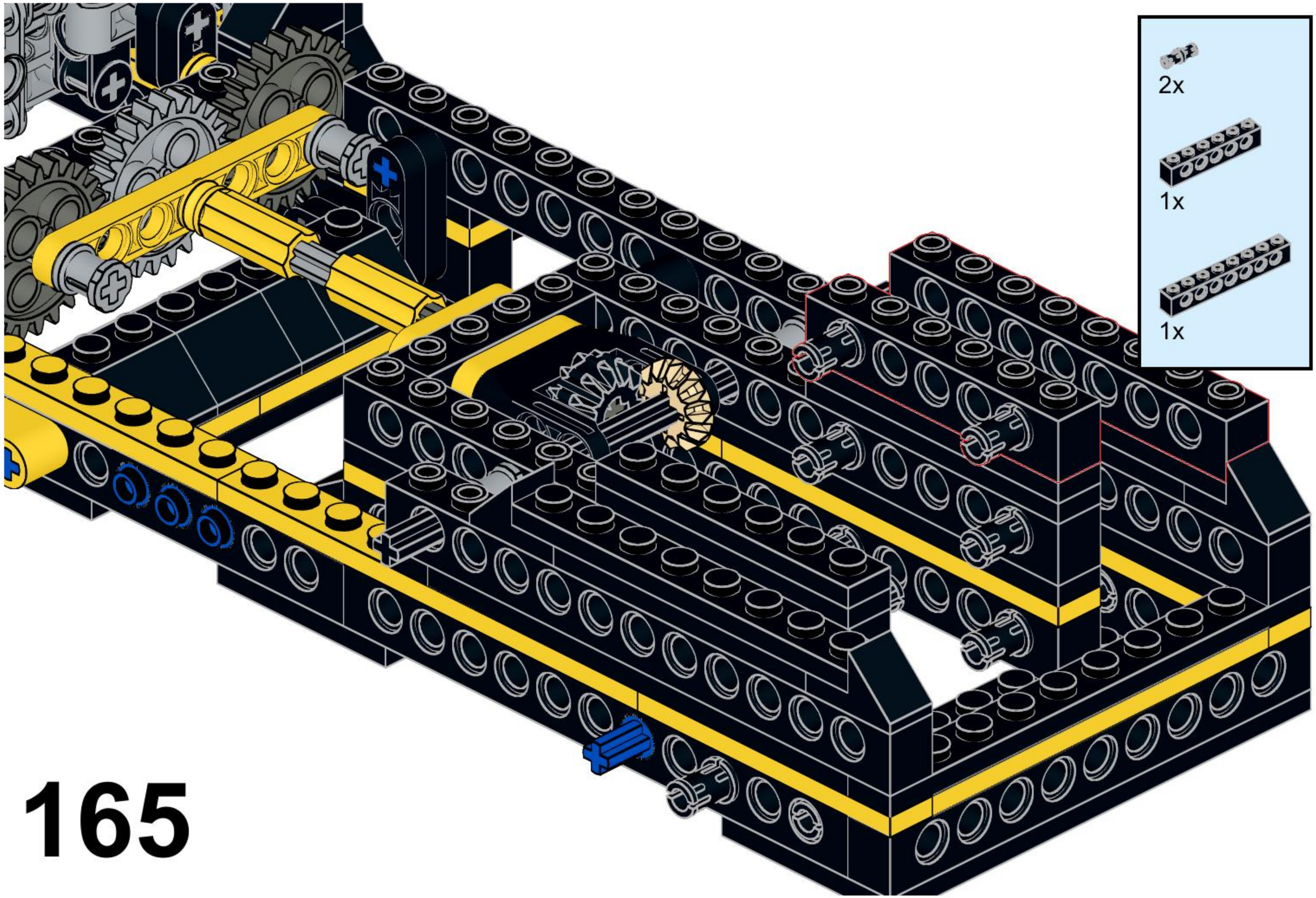
2x
1x
1x

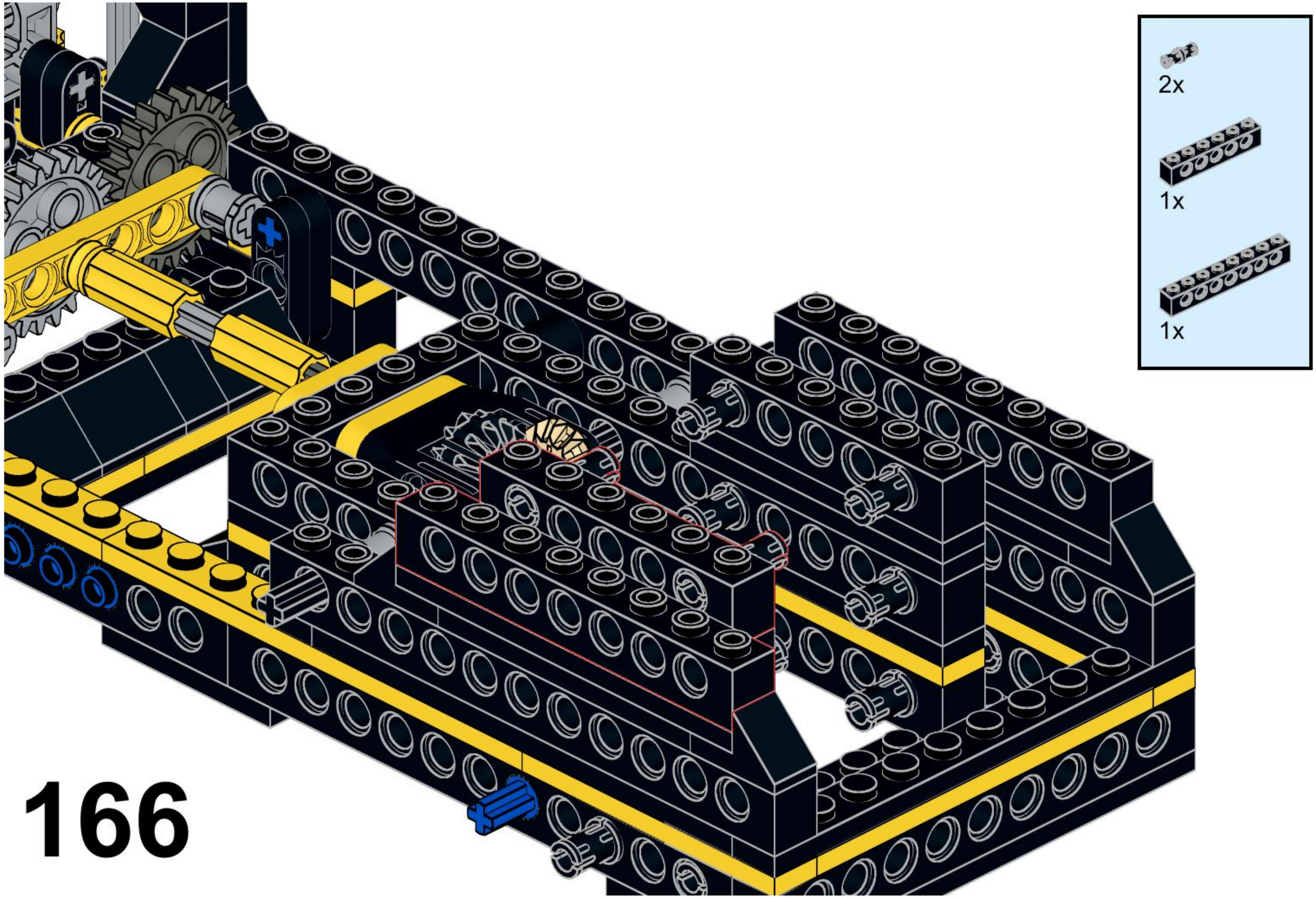
2x
1x
1x

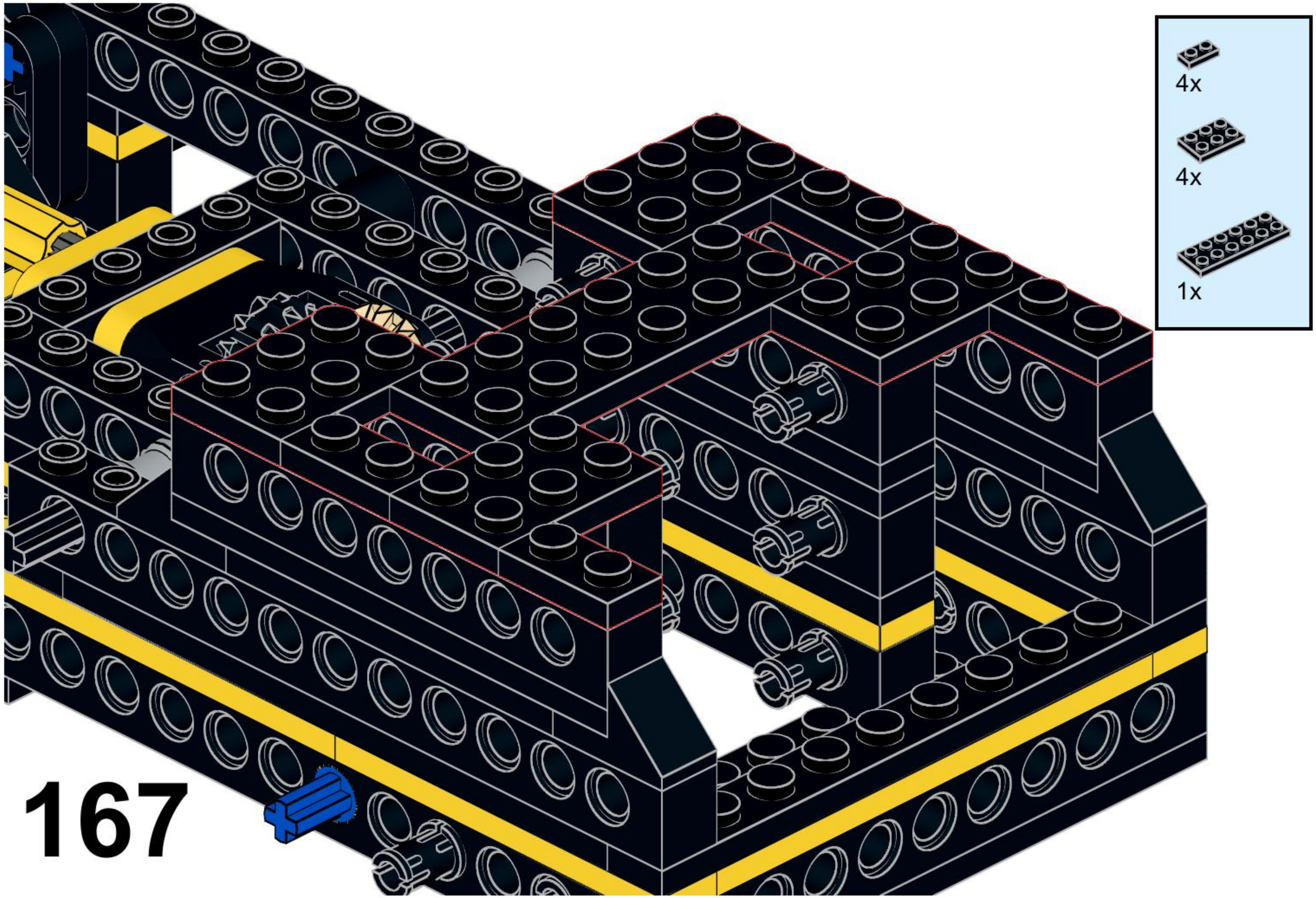
4x
4x
1x

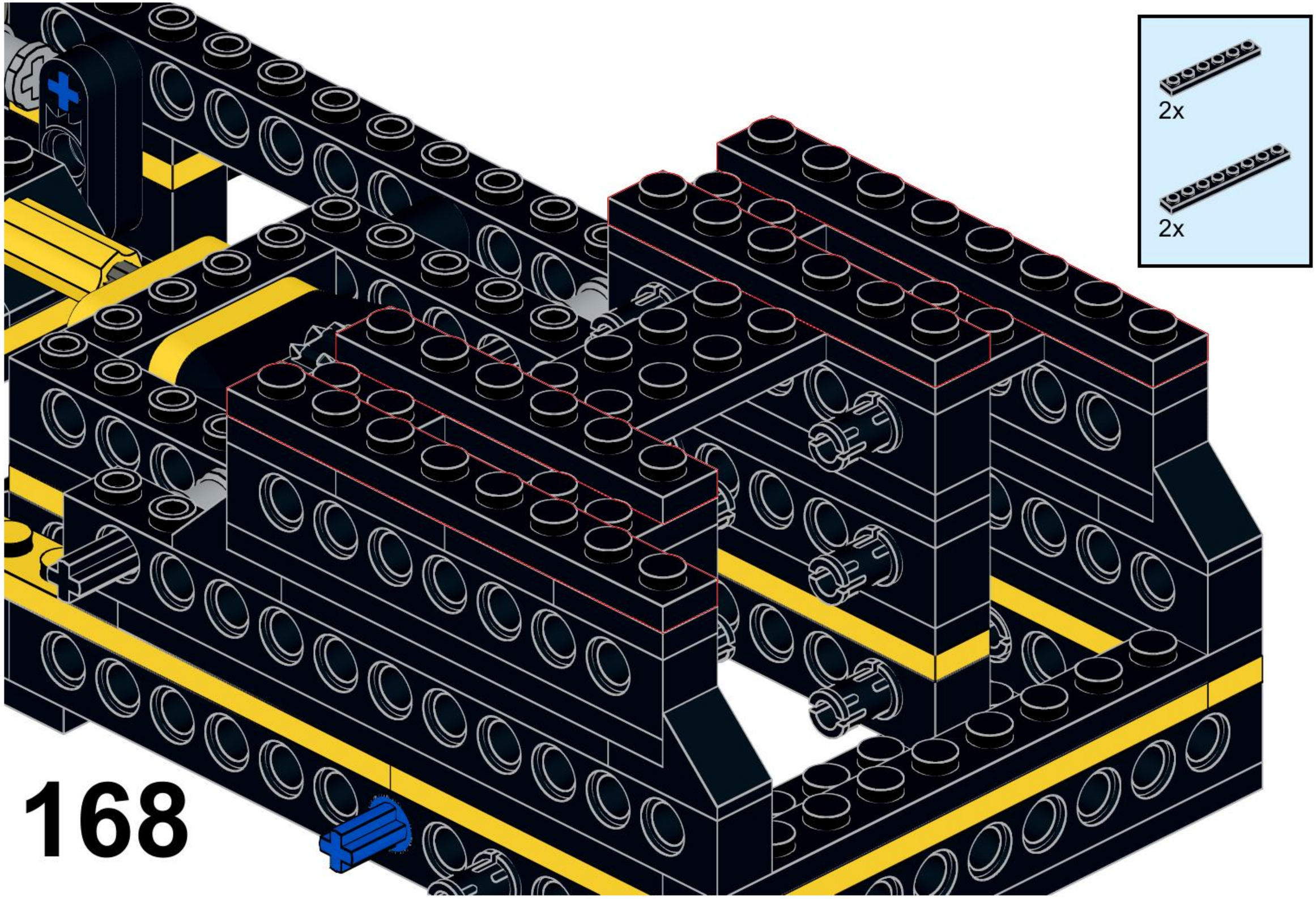
2x
2x
168

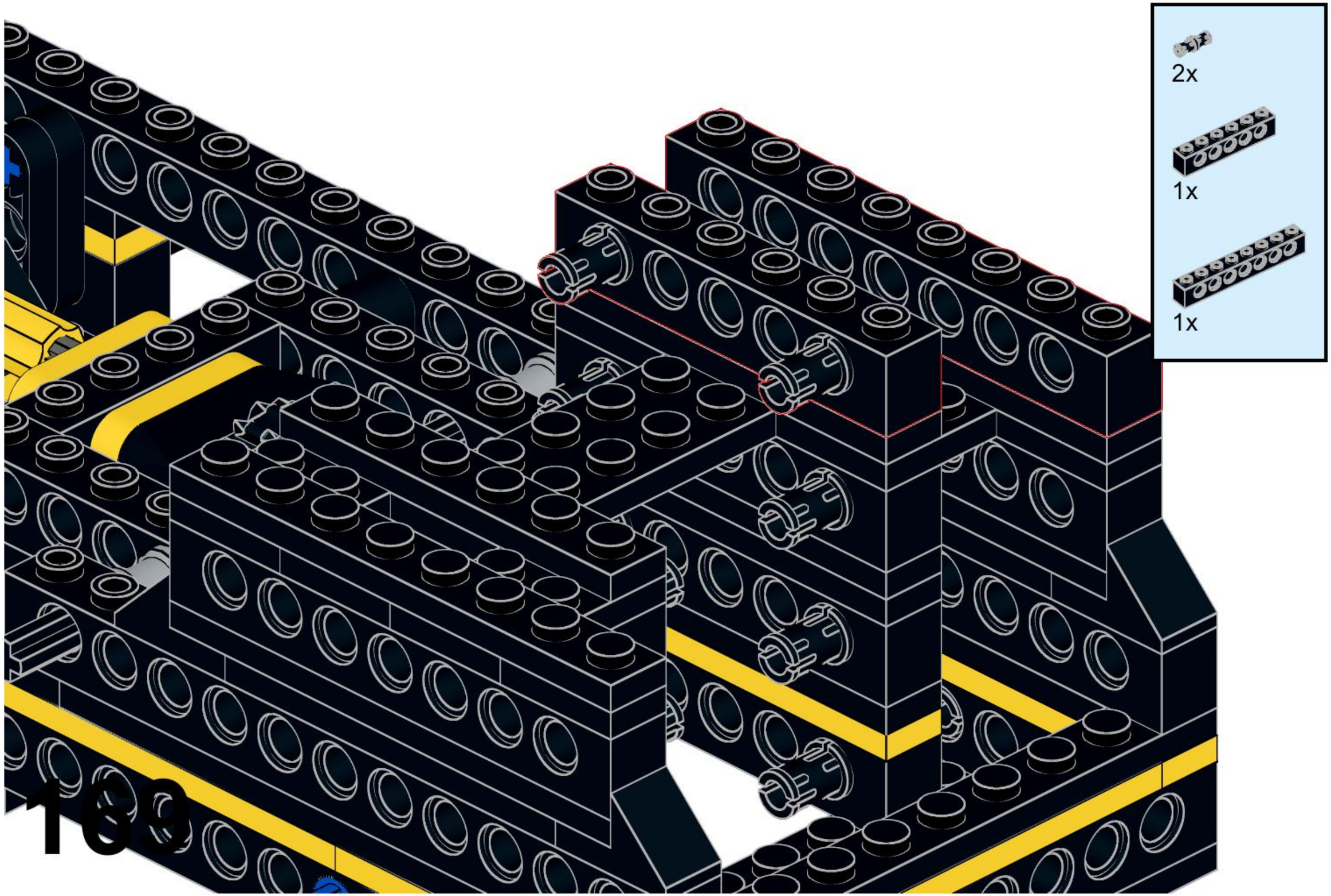
2x
1x
1x

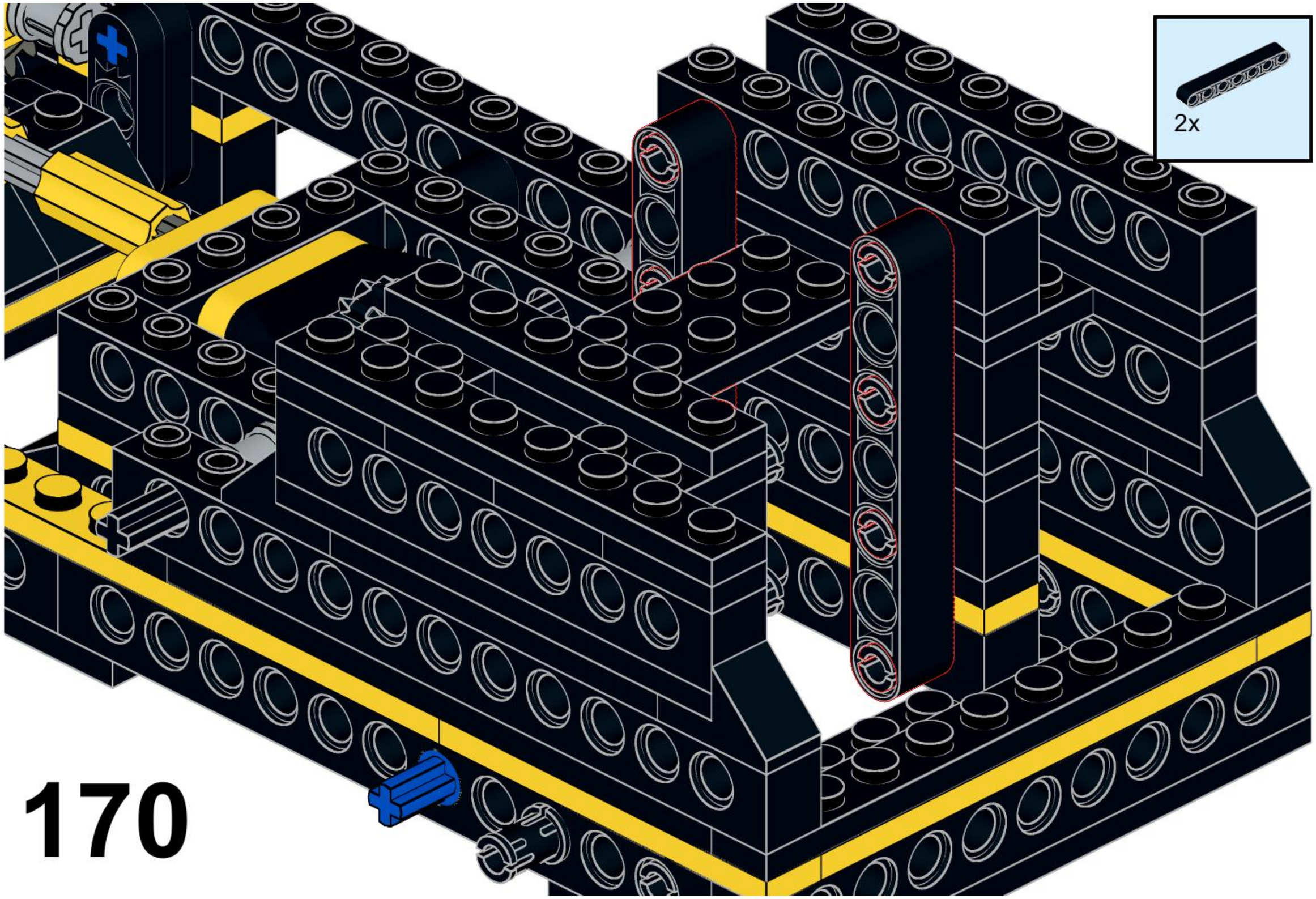

170

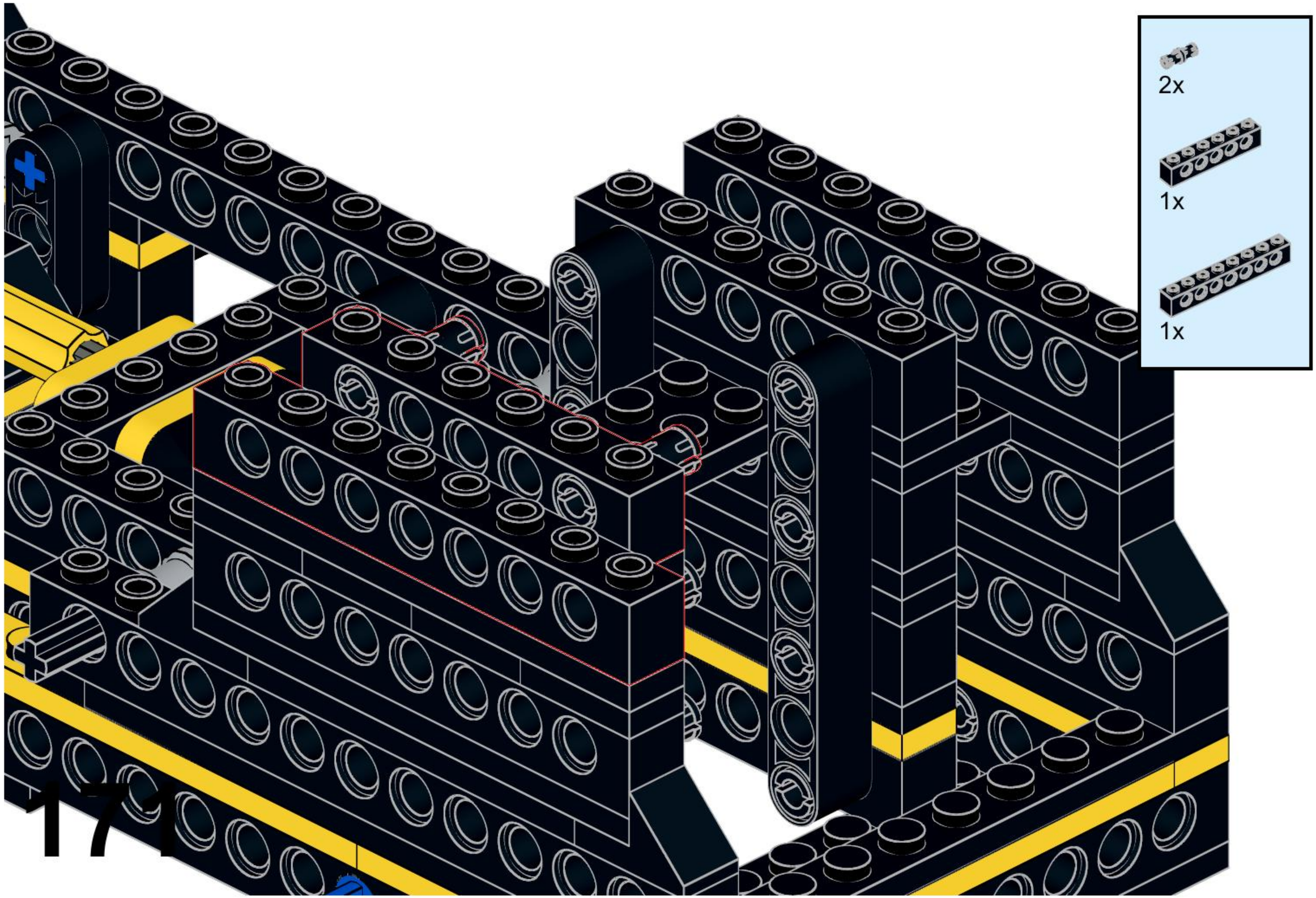
2x
1x
1x
179

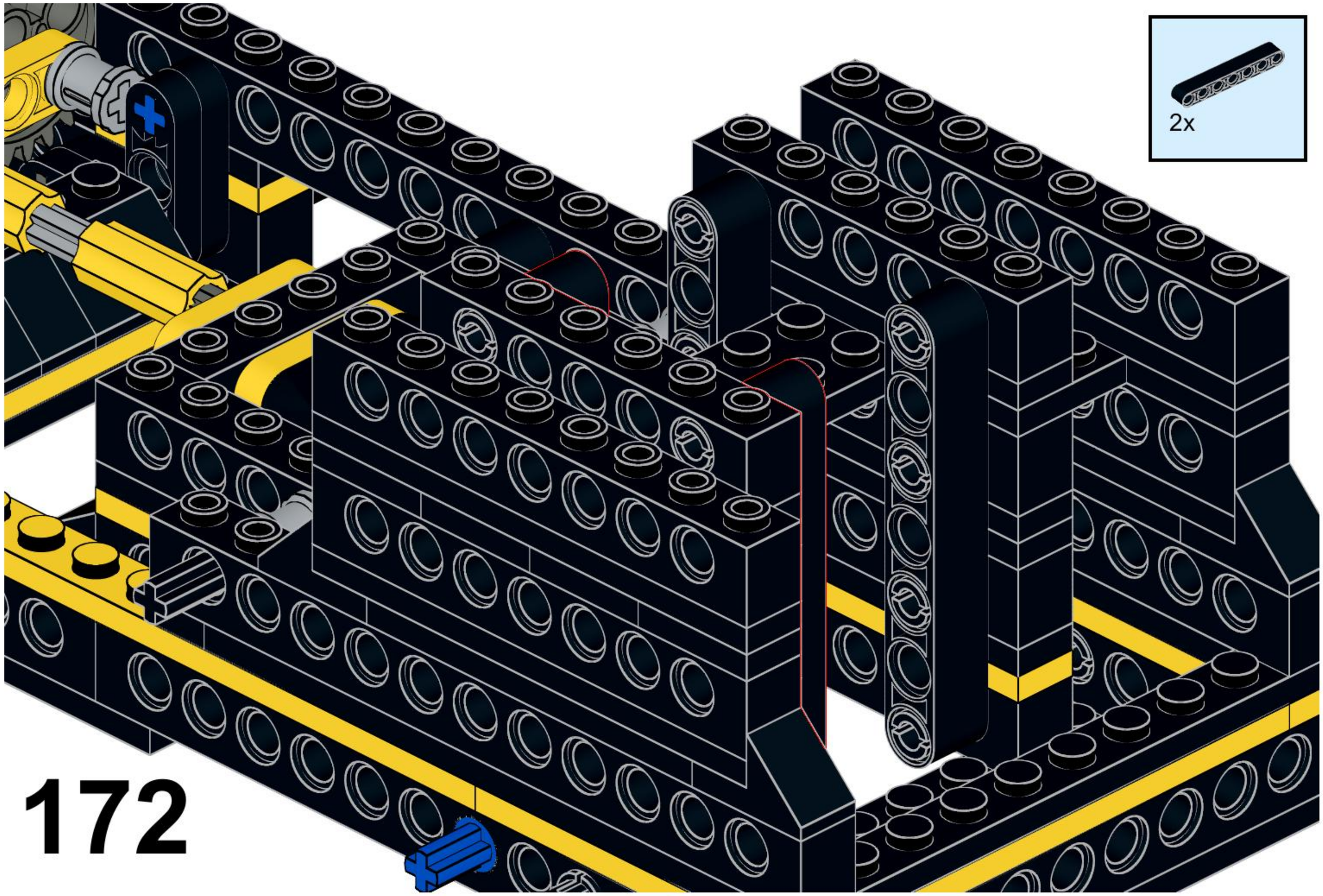
2x
172

173

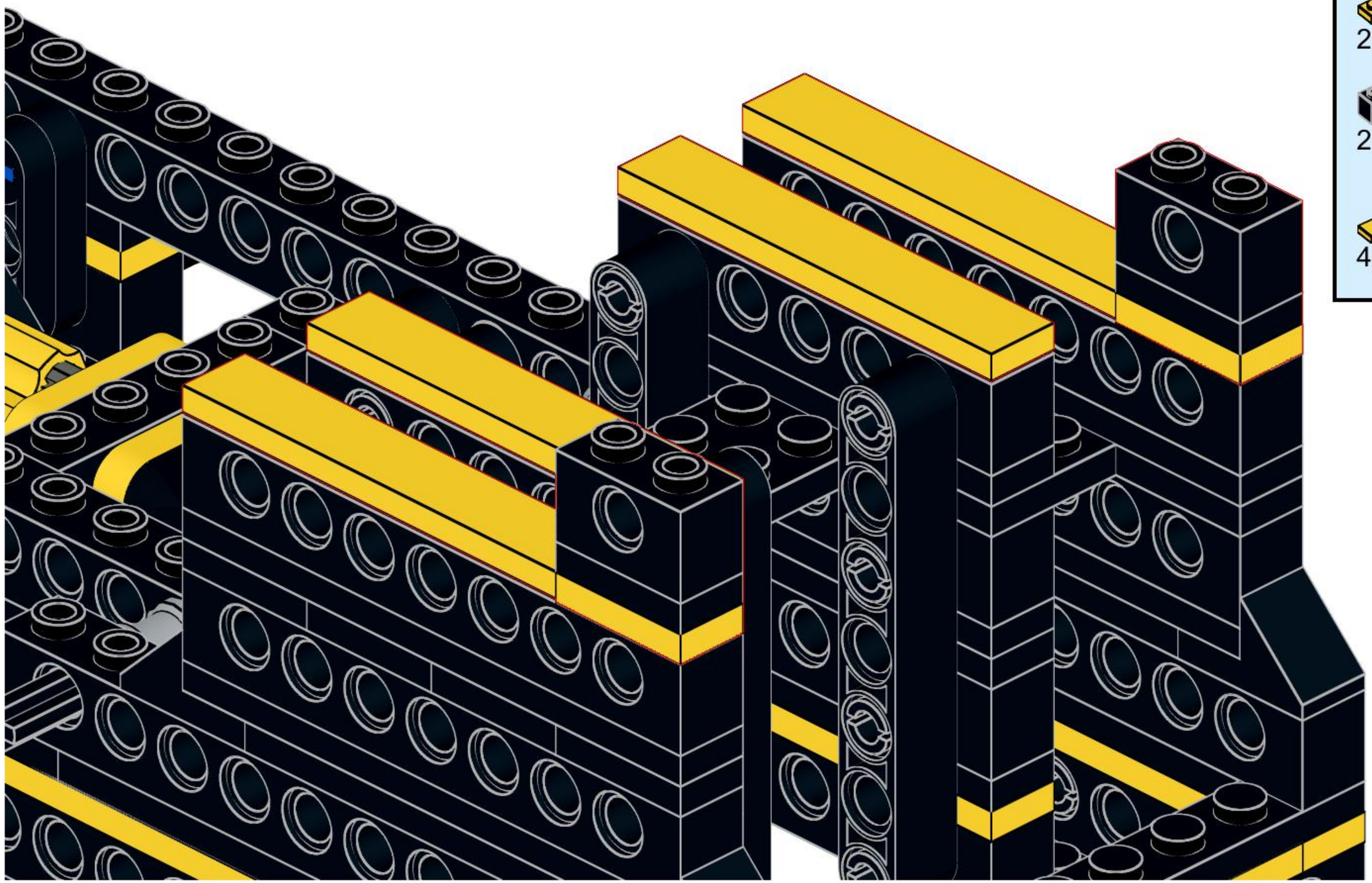

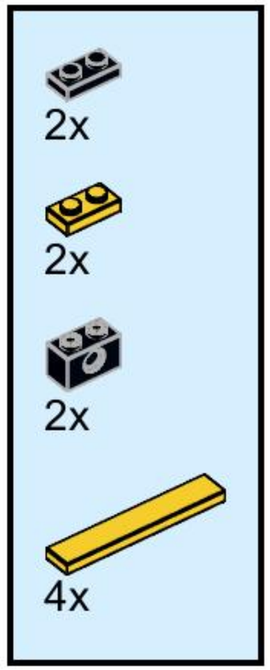

174

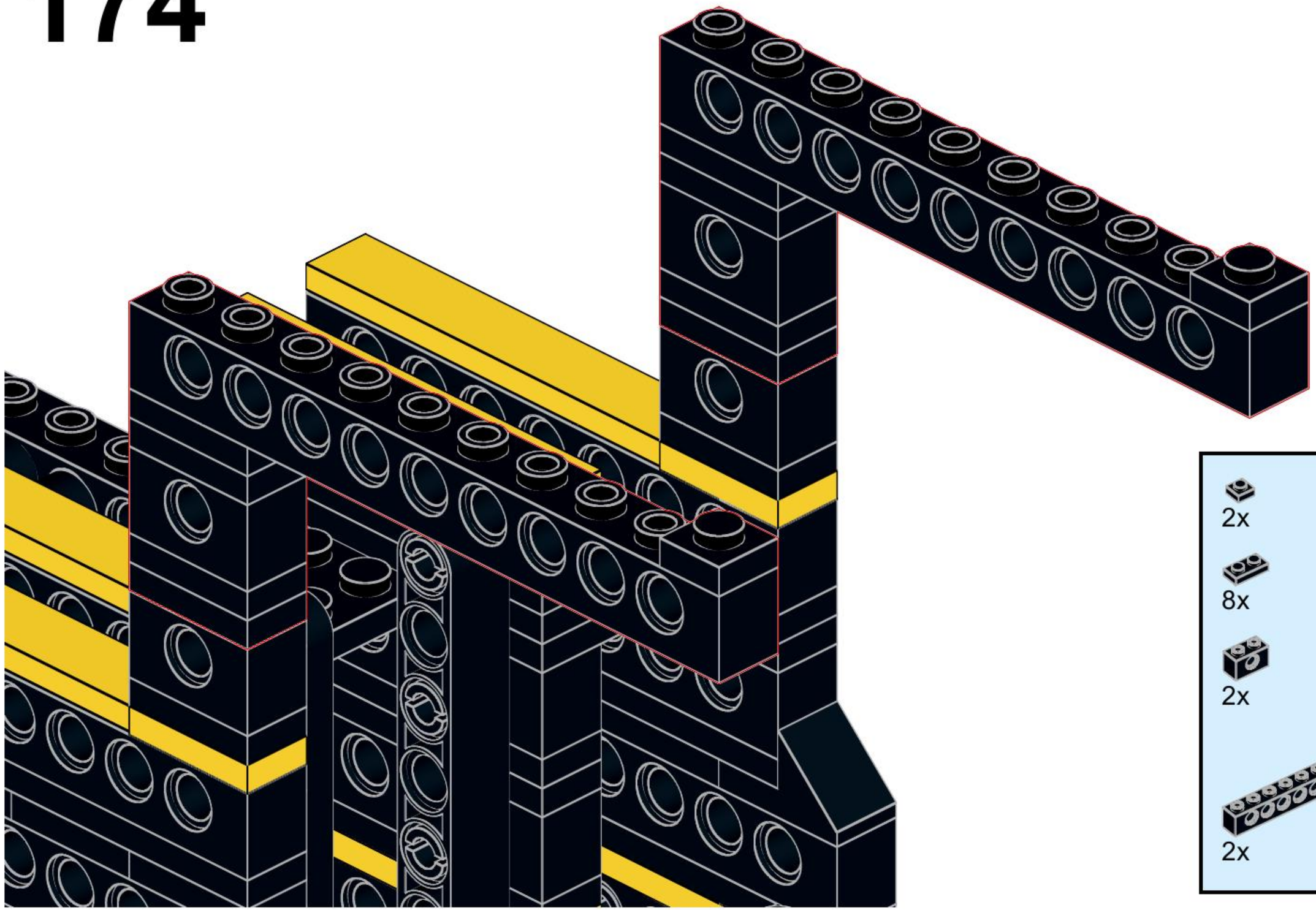

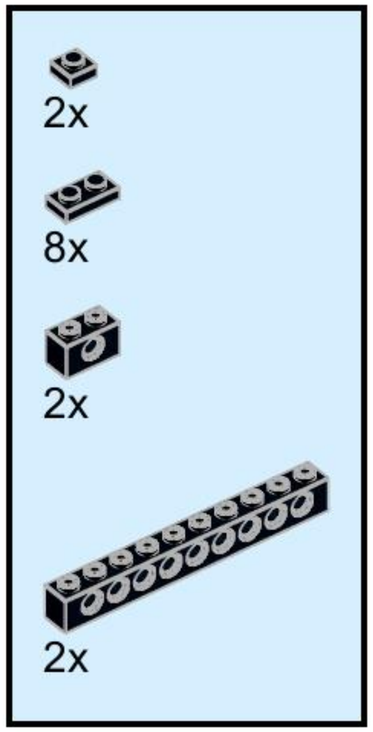

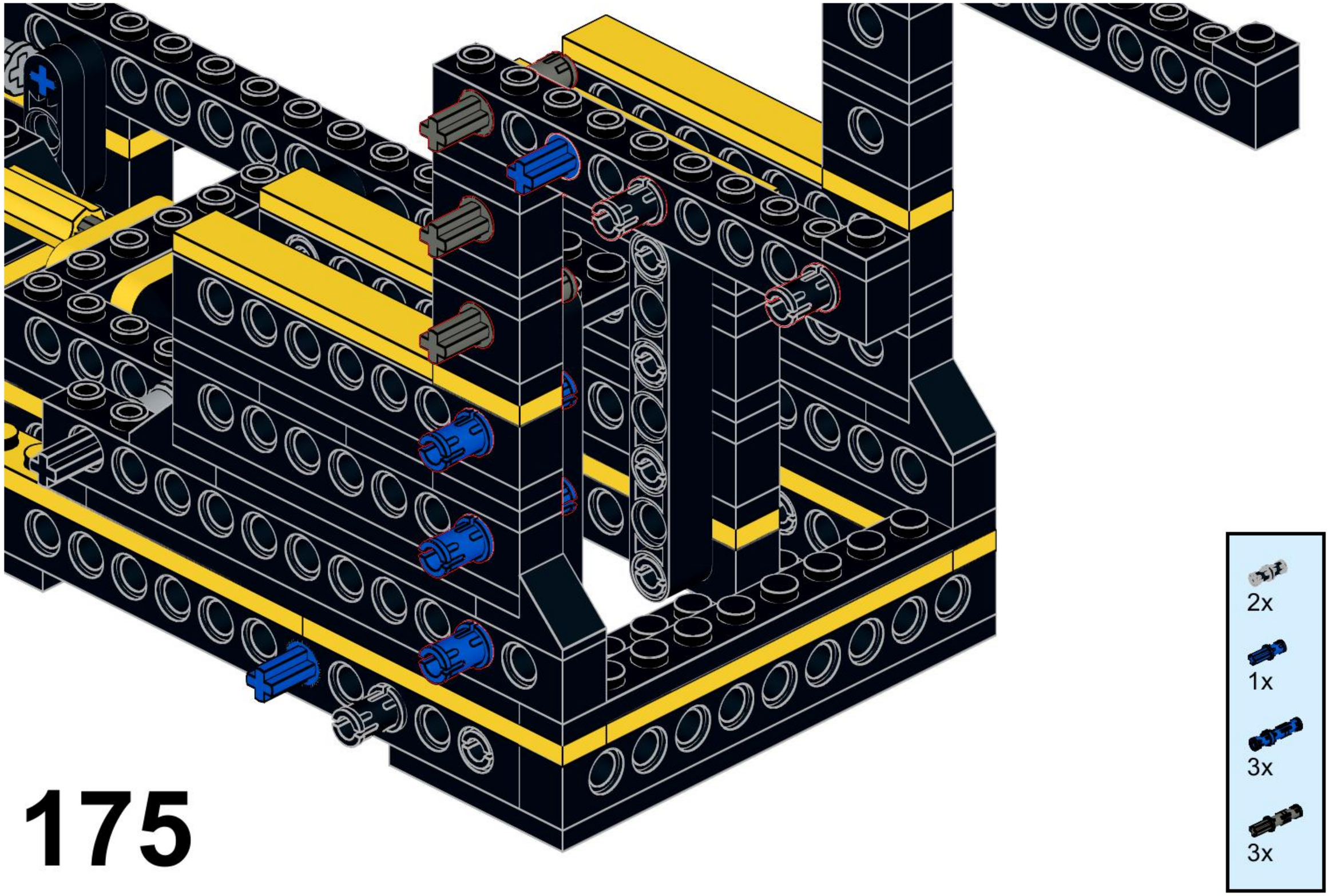
2x
1x
3x
3x

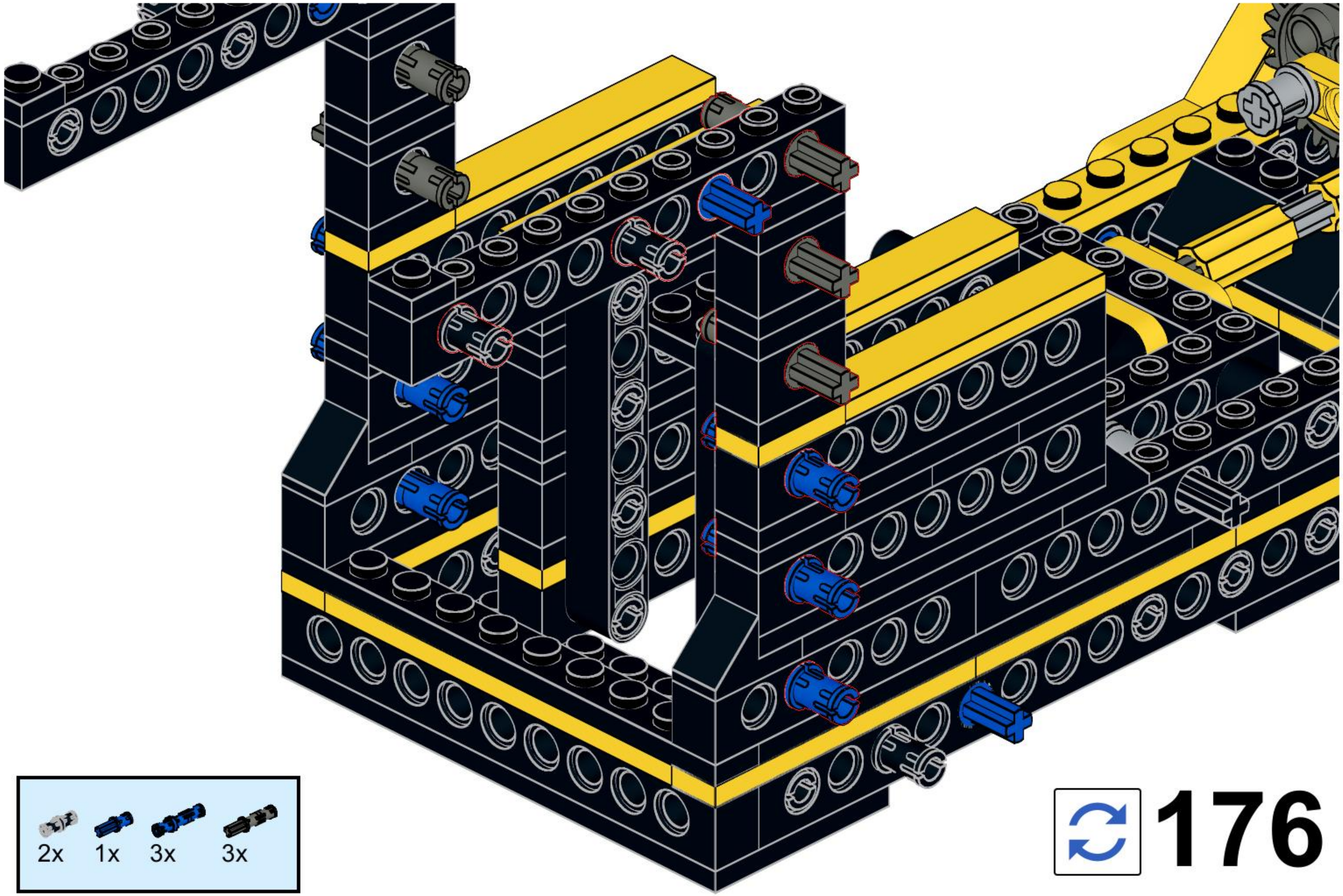
2x
1x
3x
3x
176

177

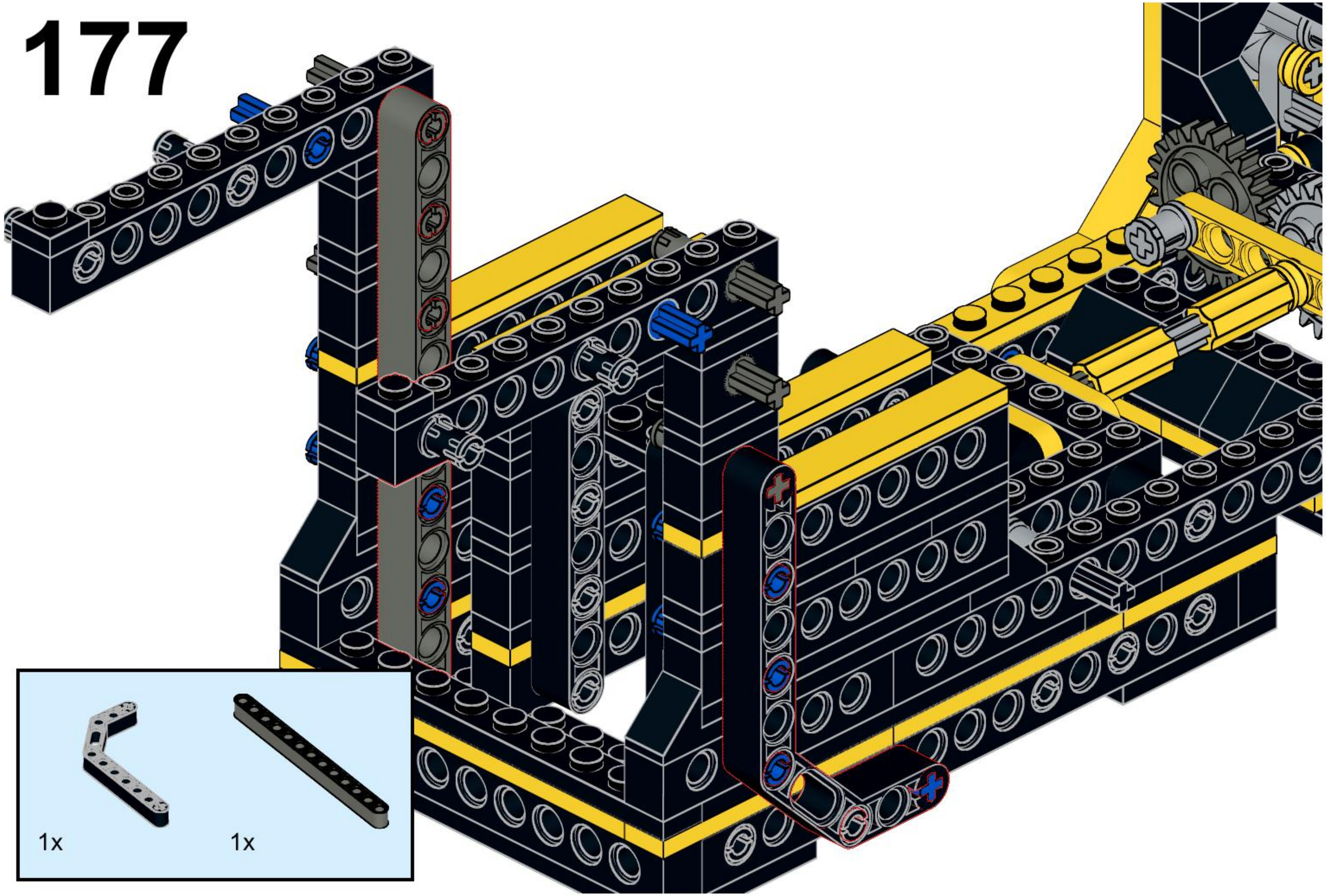

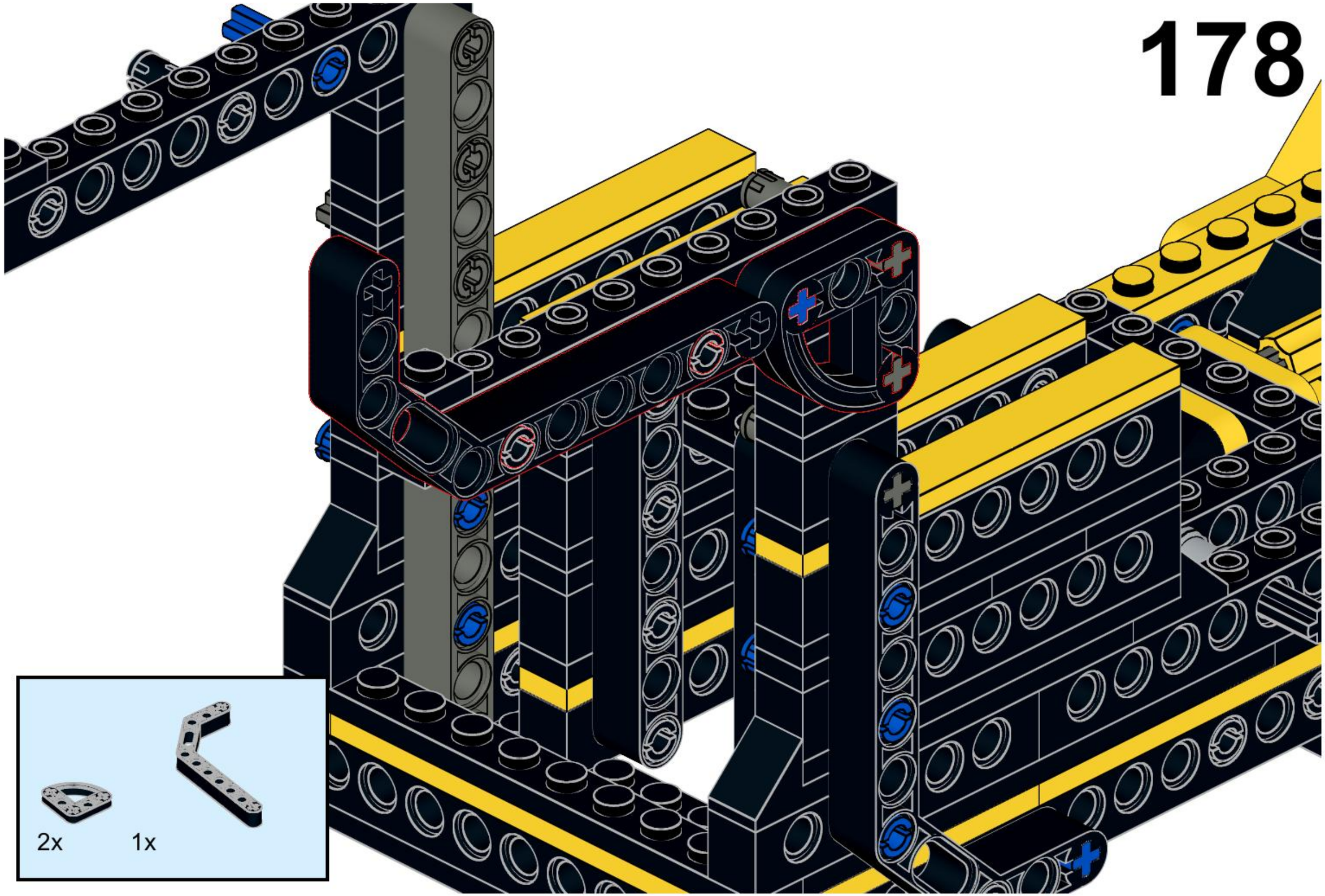
2x
1x

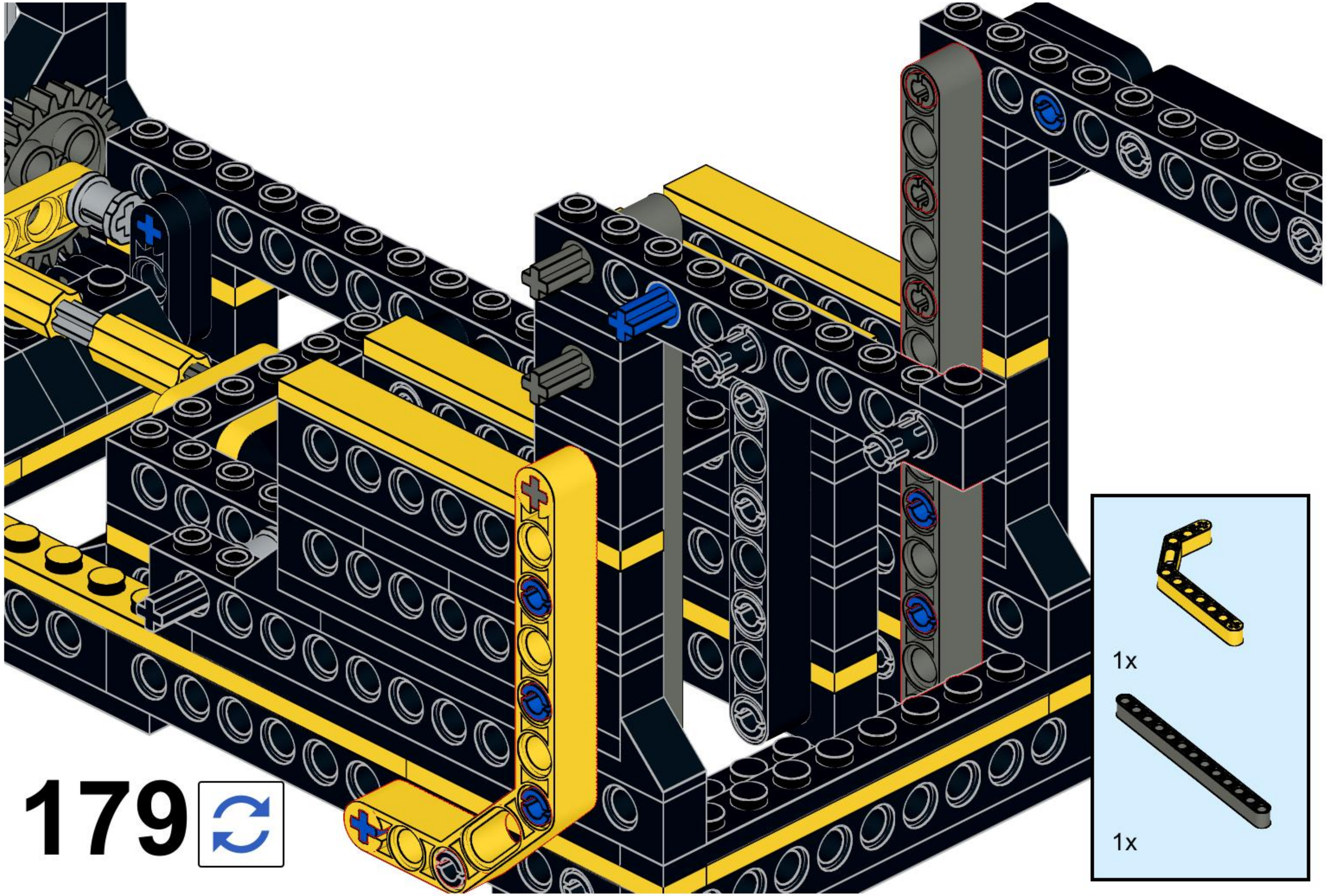
179
1x
1x

180

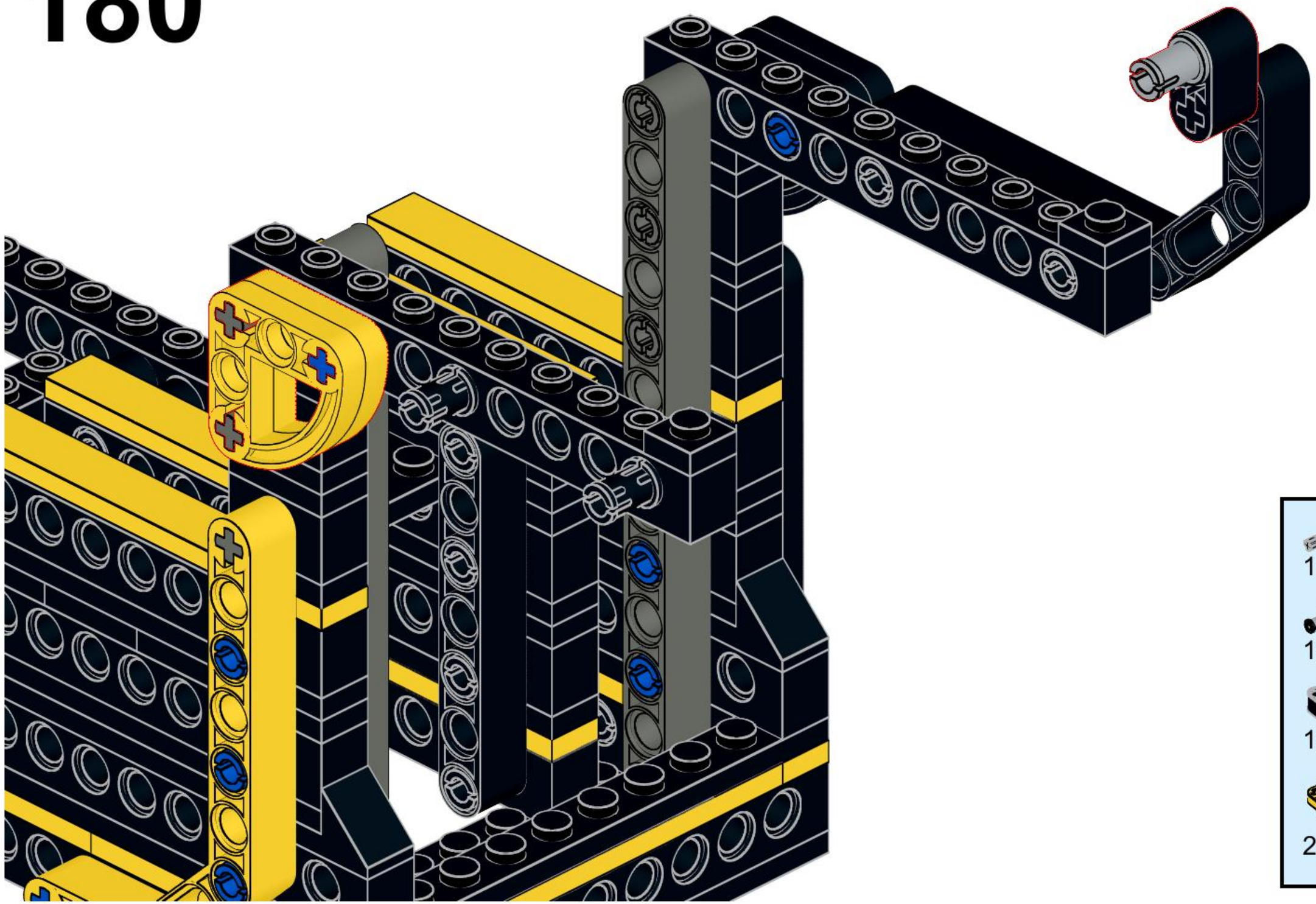

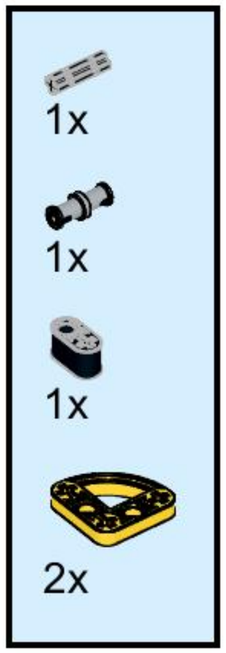

181

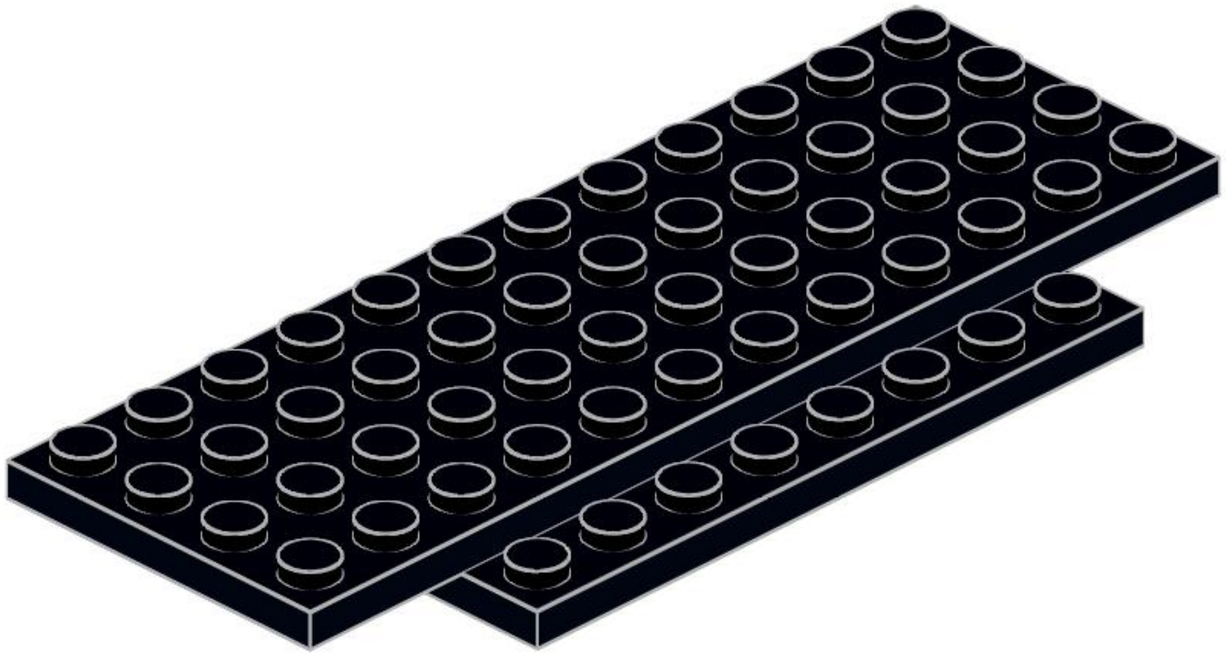

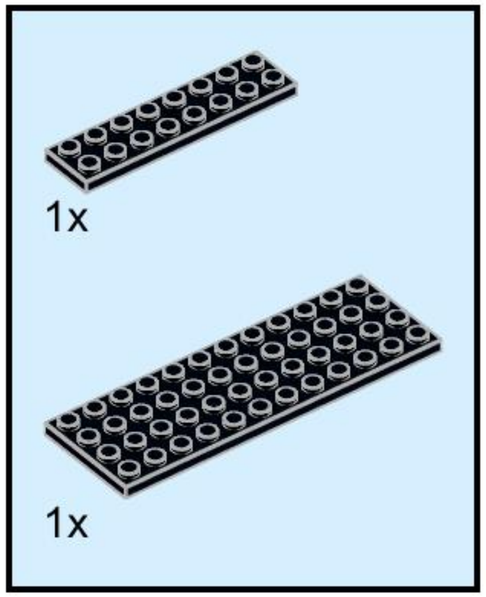

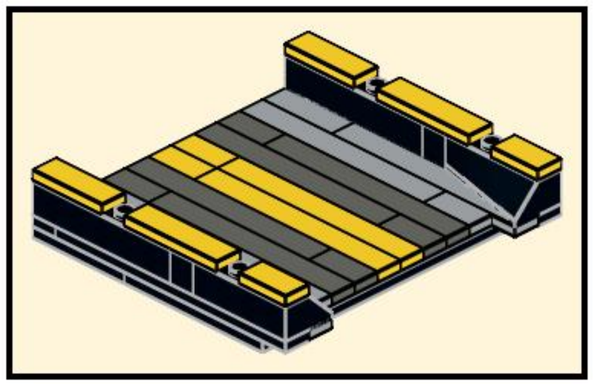

182

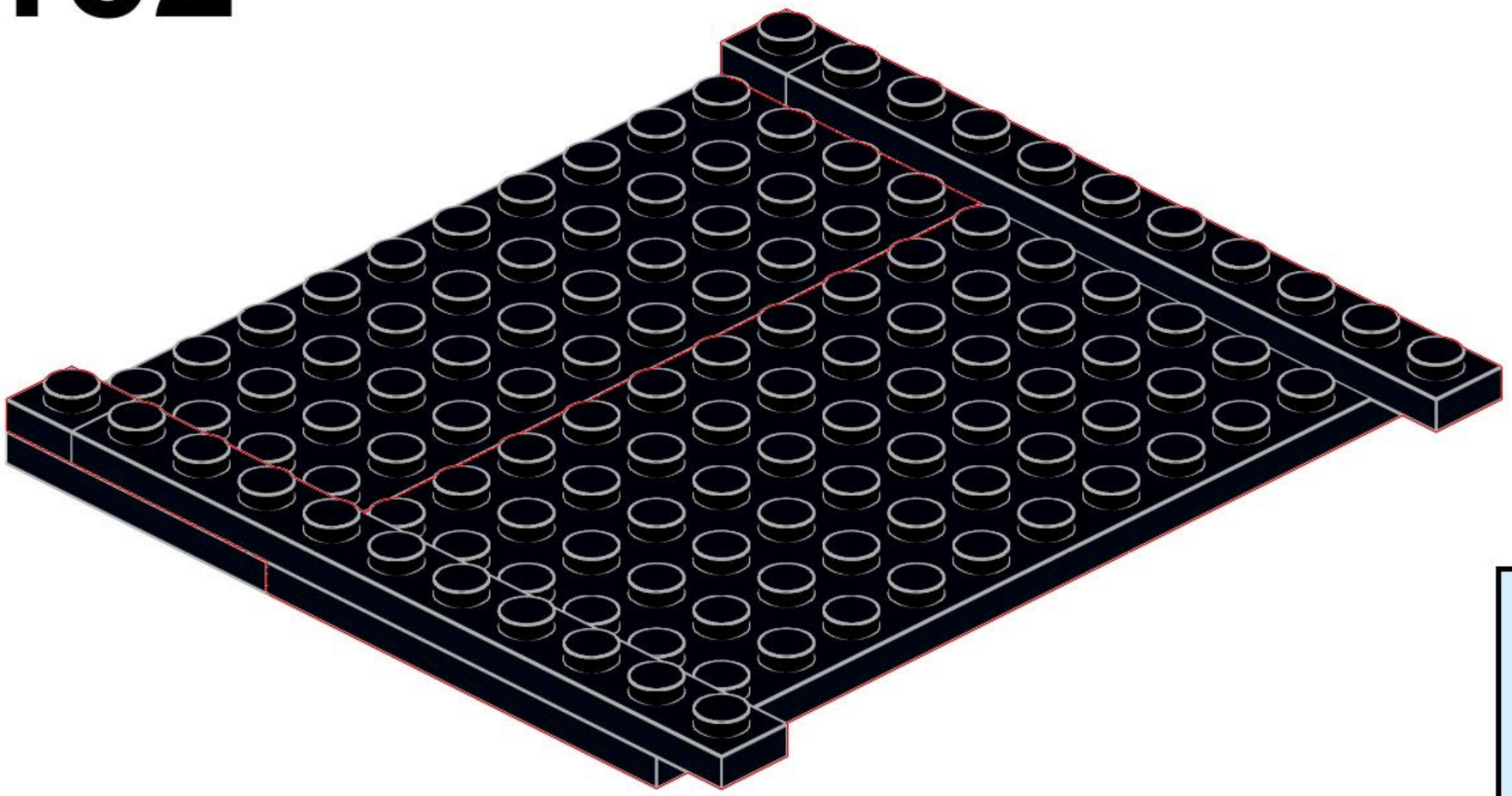

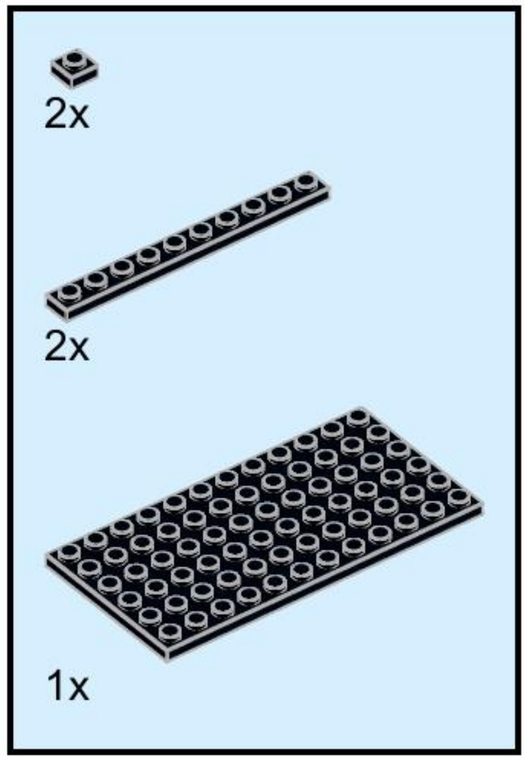

183

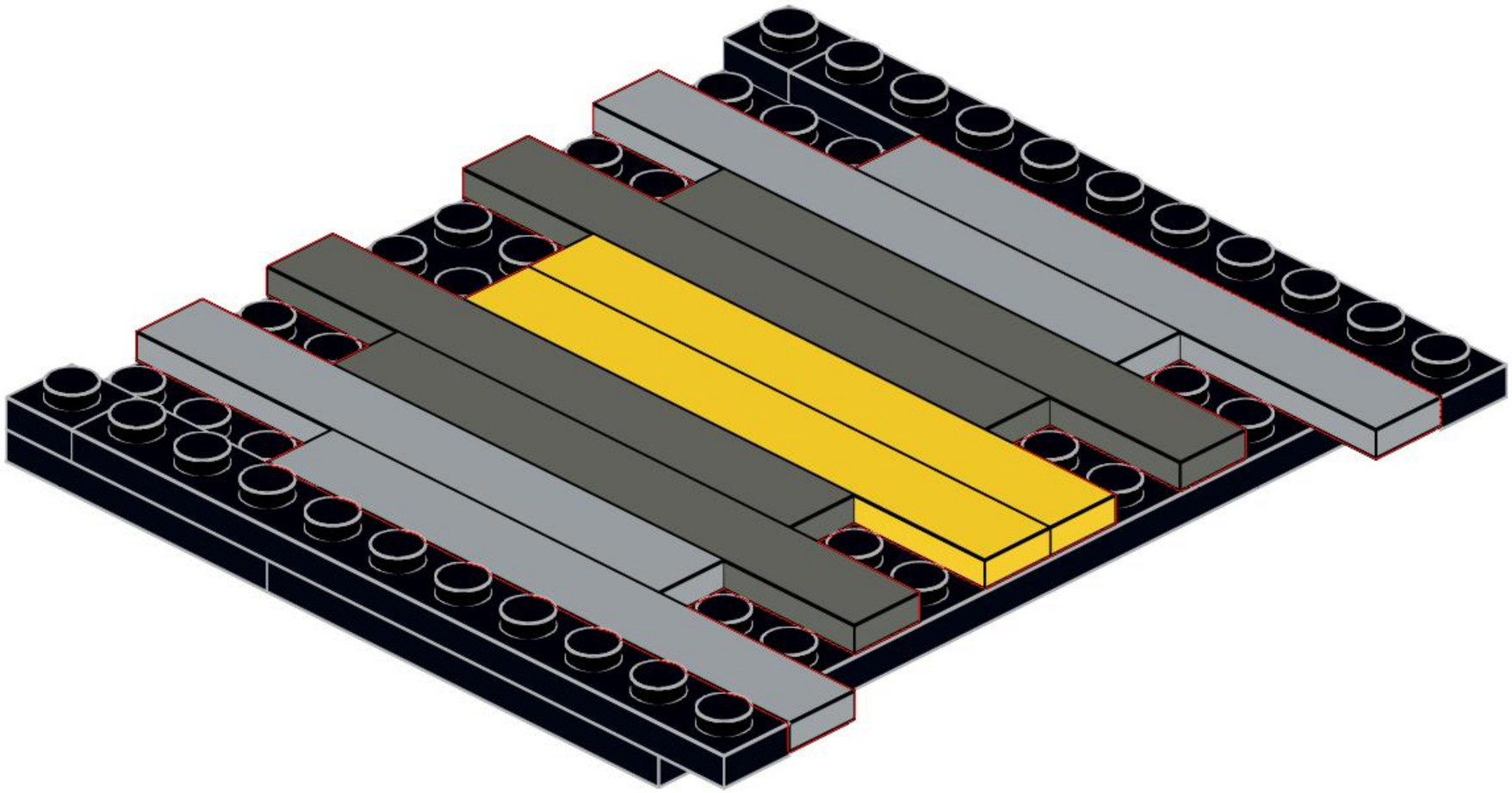

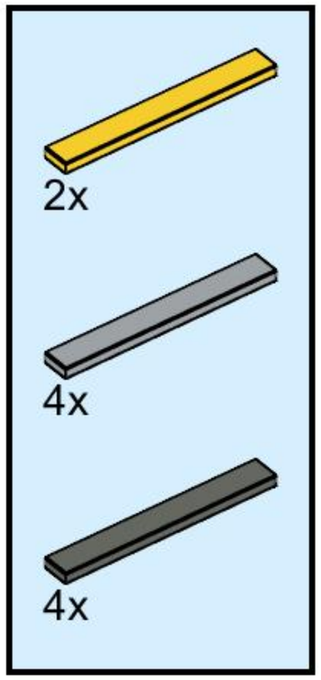

184

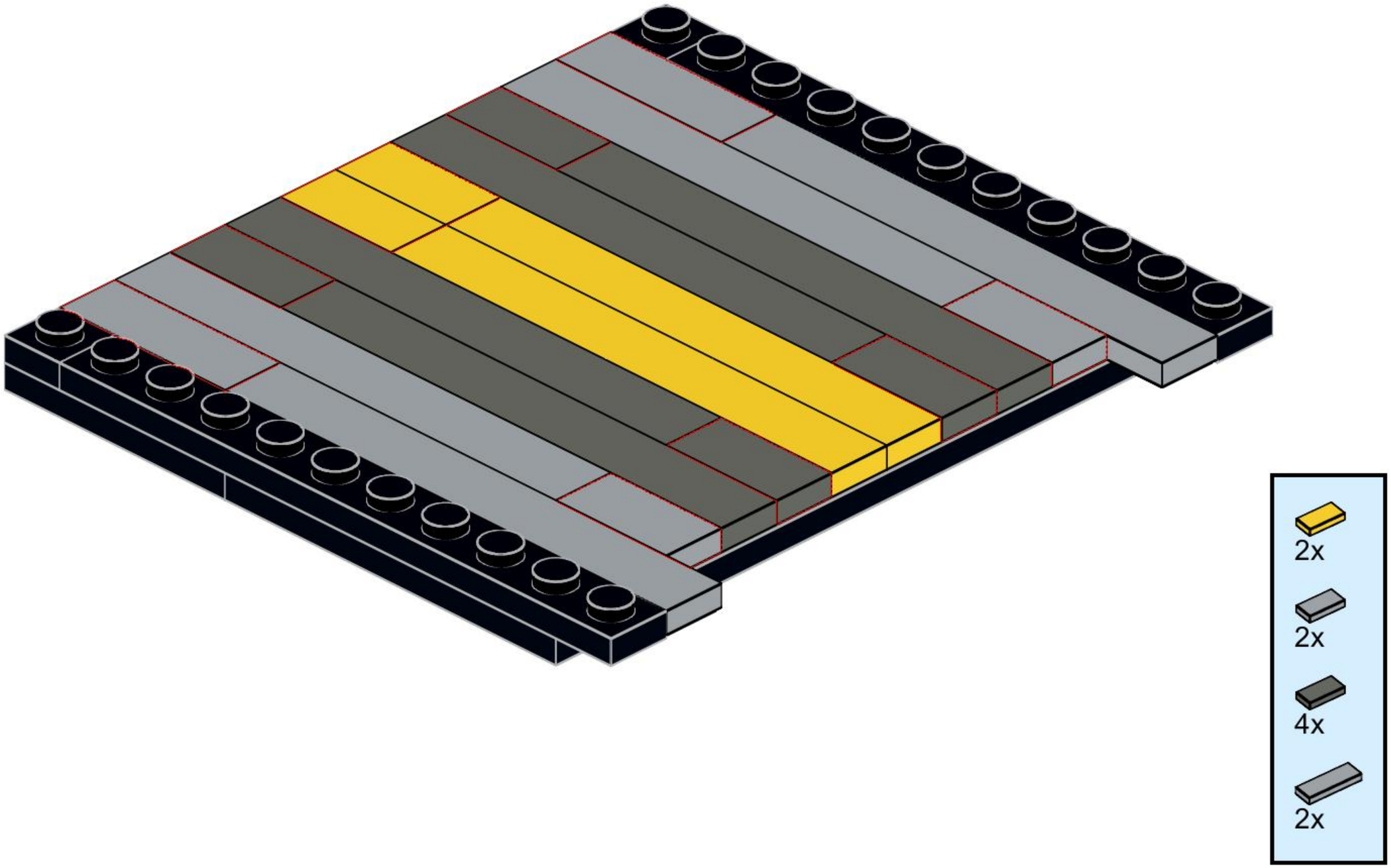

185

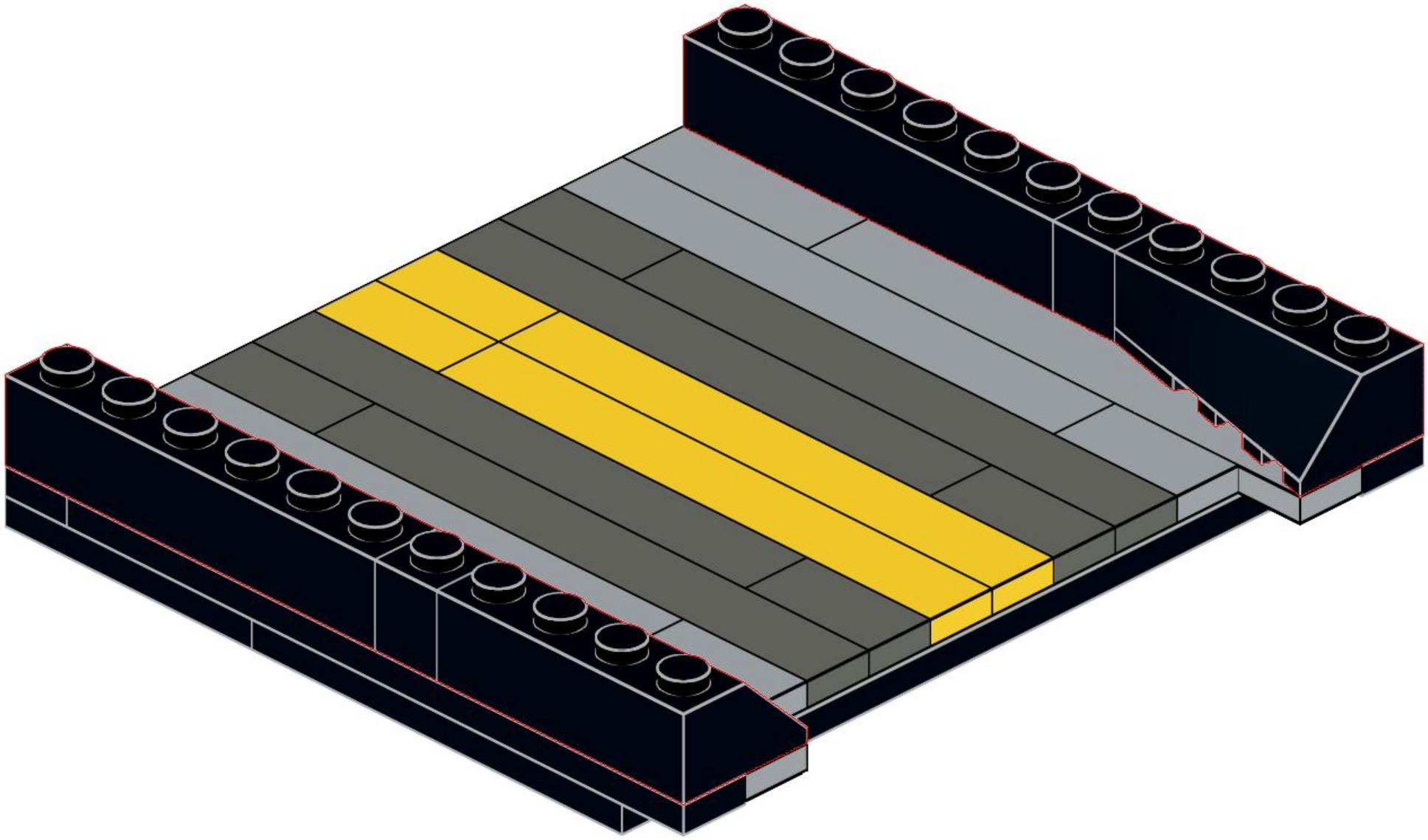

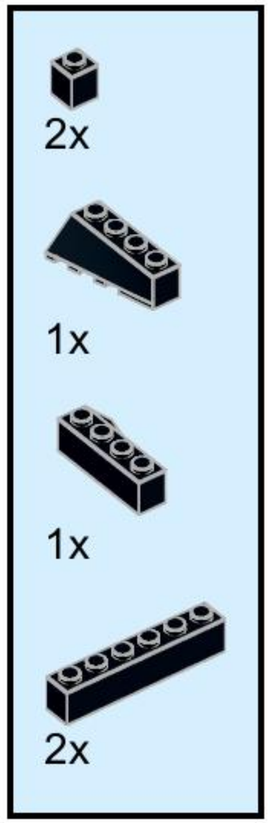

186

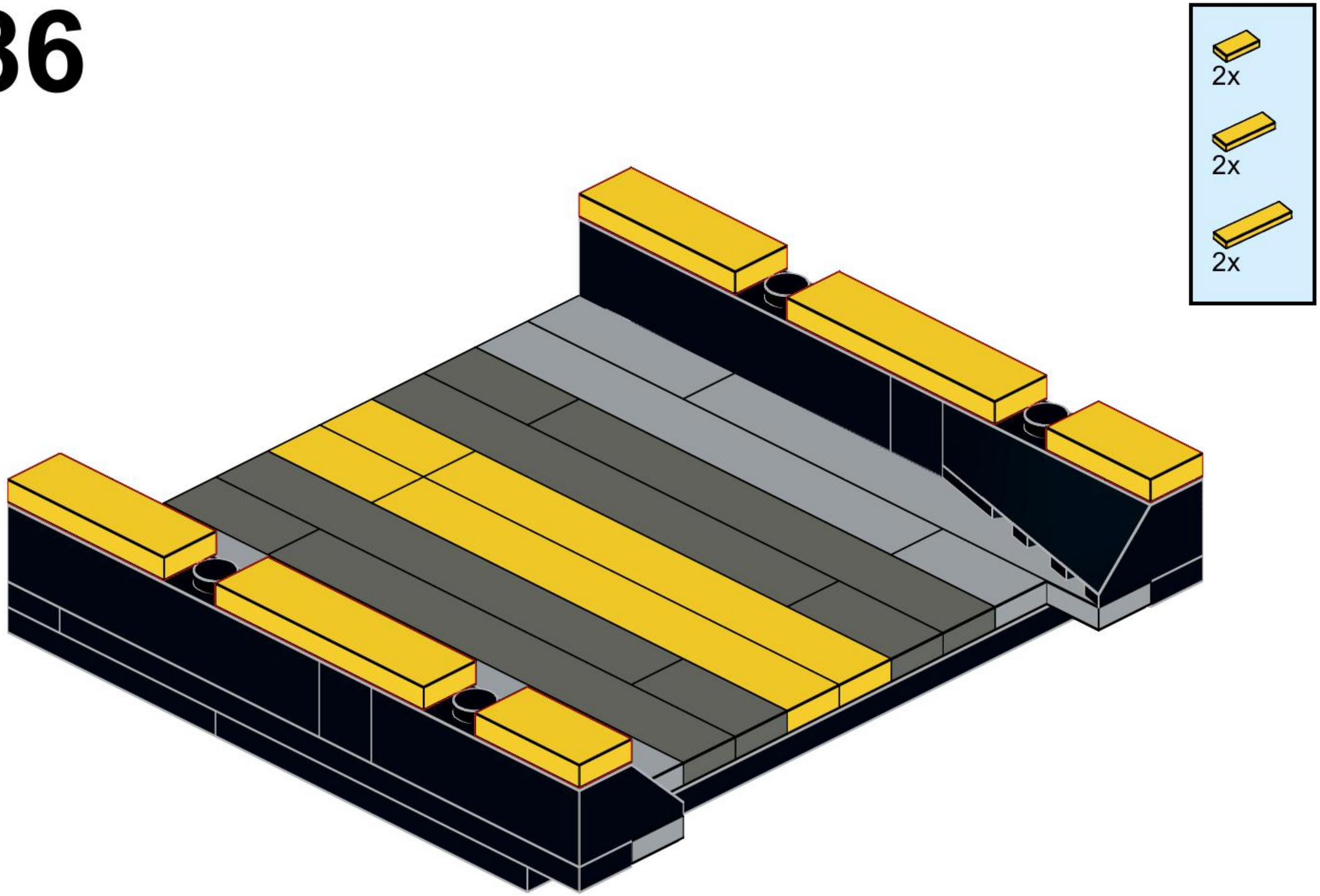

187

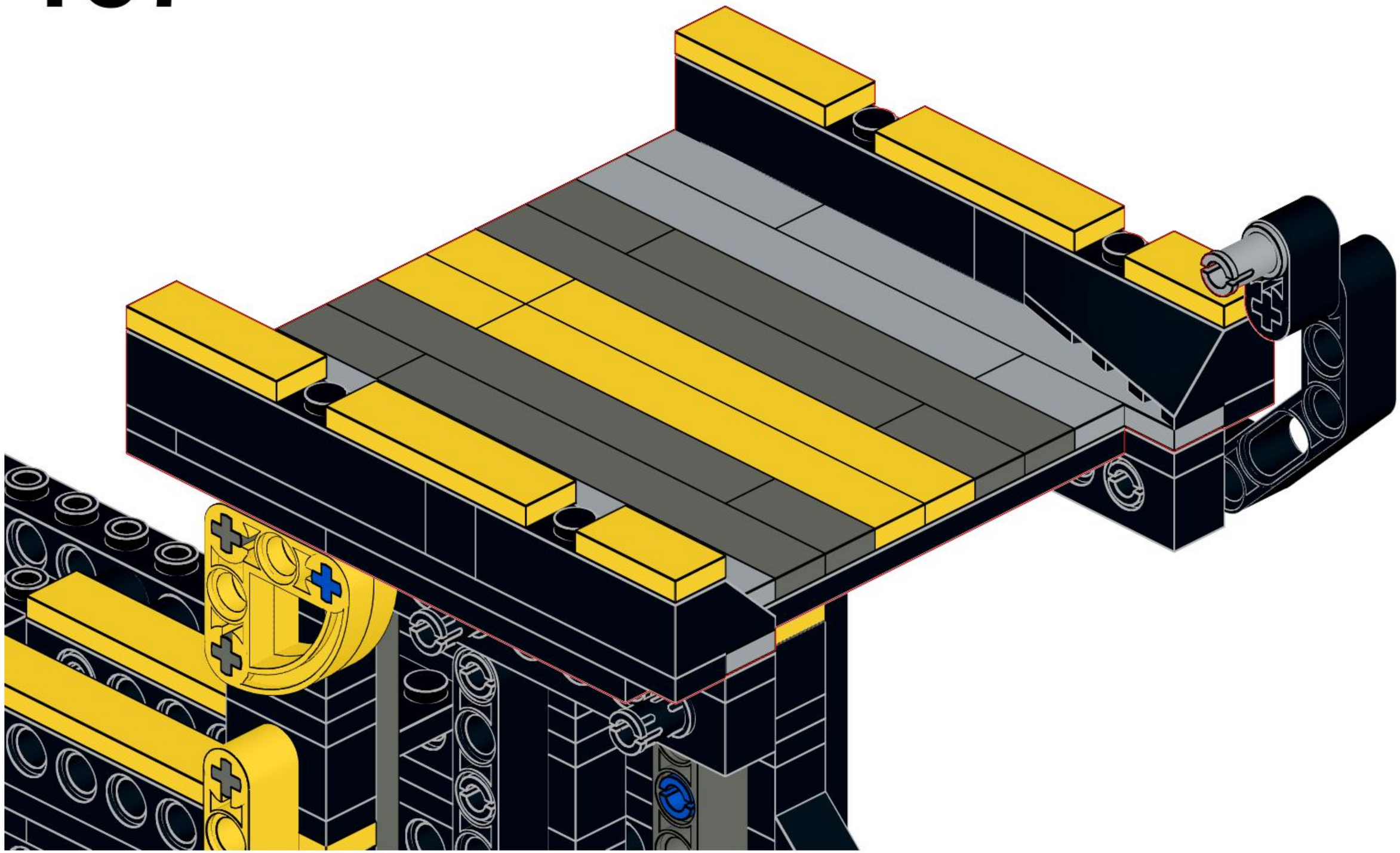

188

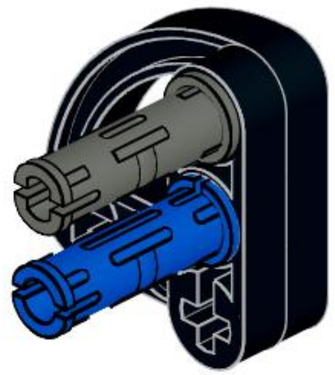

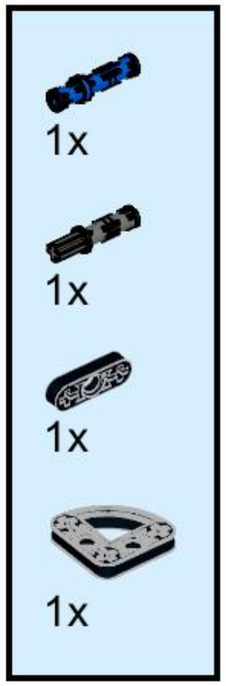

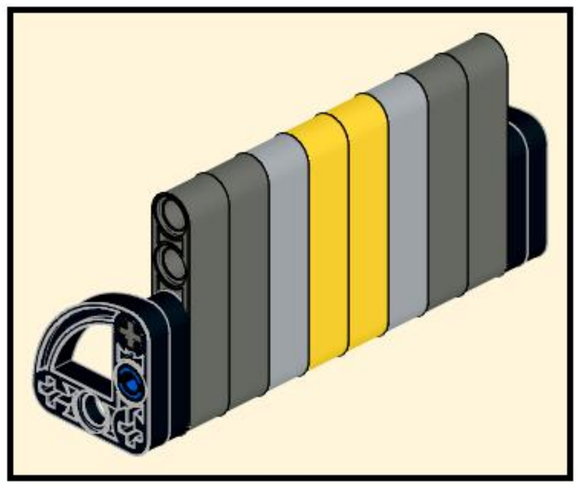

189

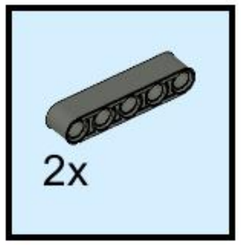

190

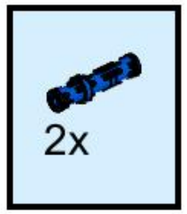

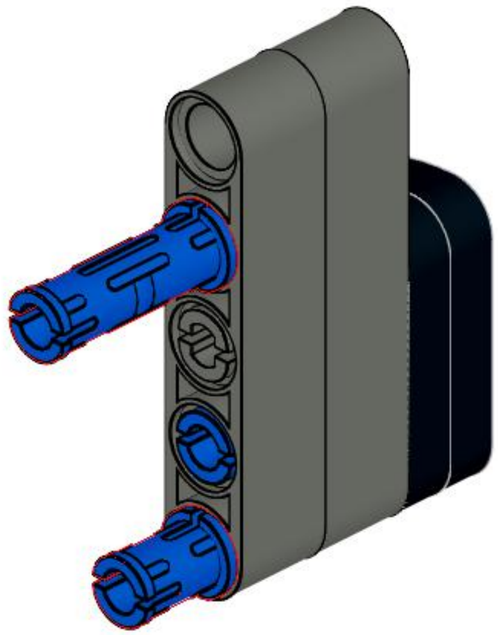

191

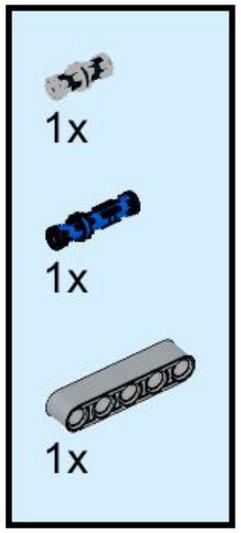

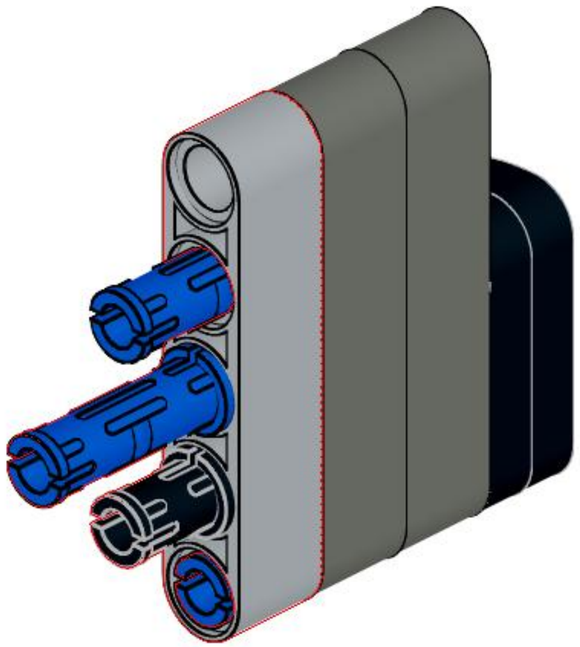

192

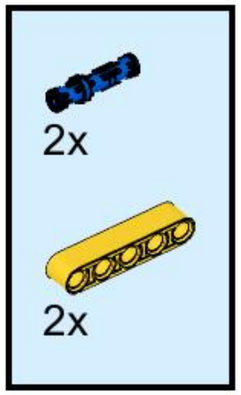

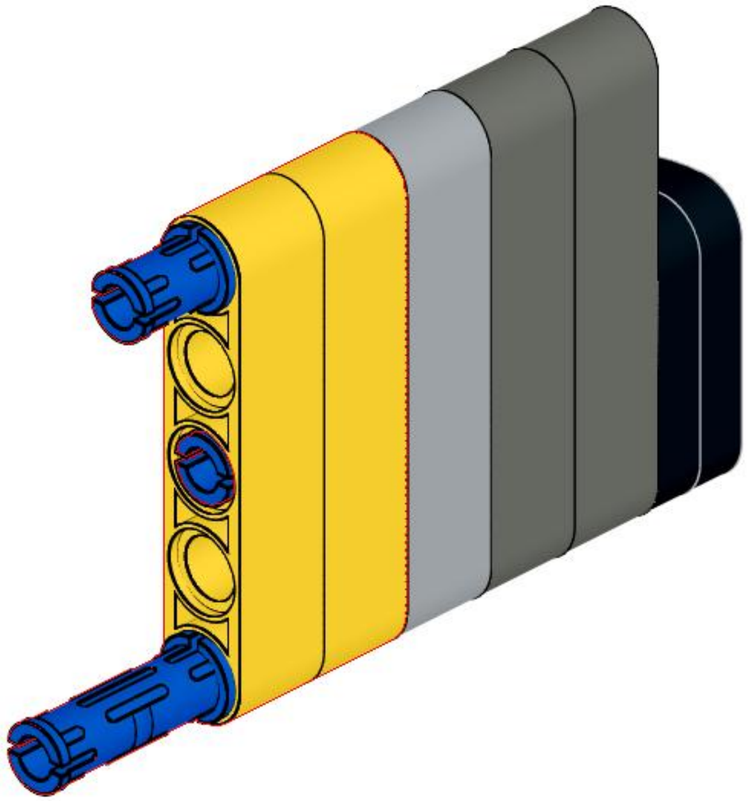

193

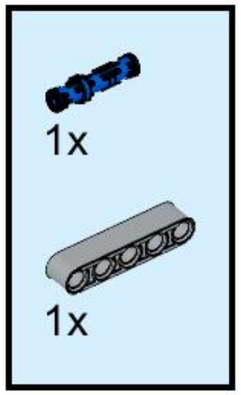

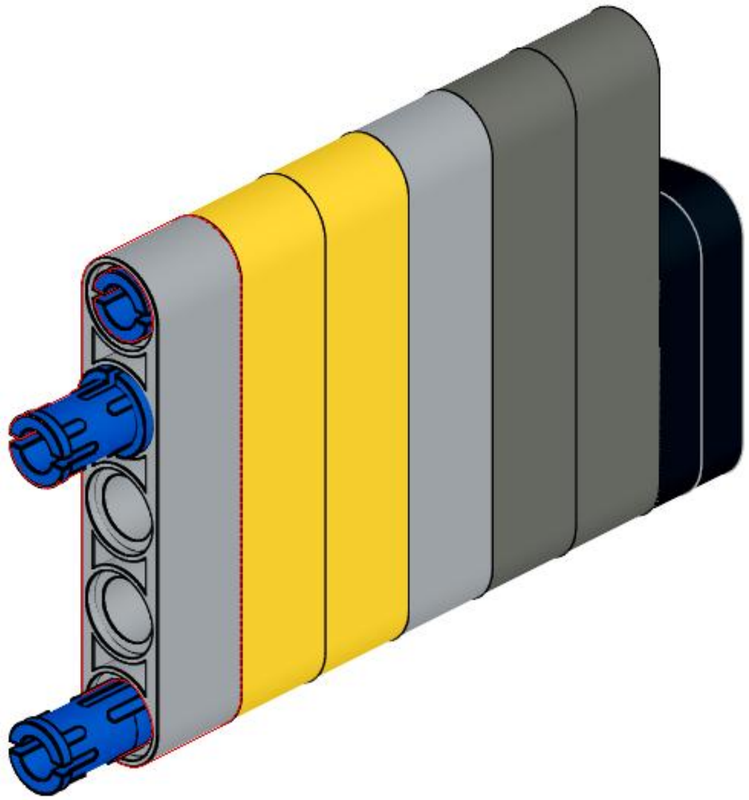

194

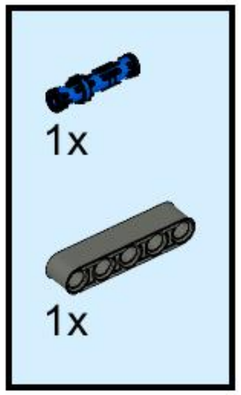

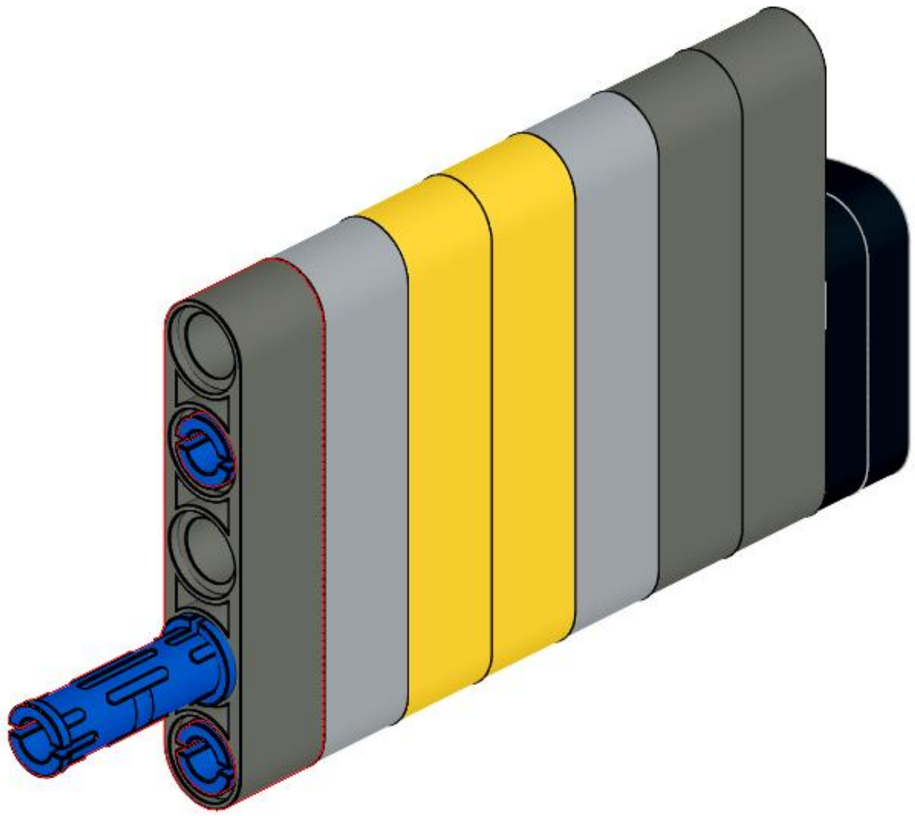

195

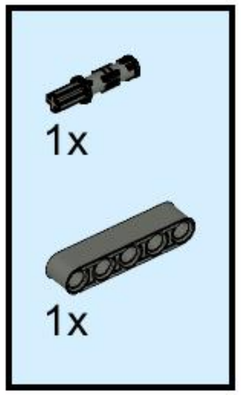

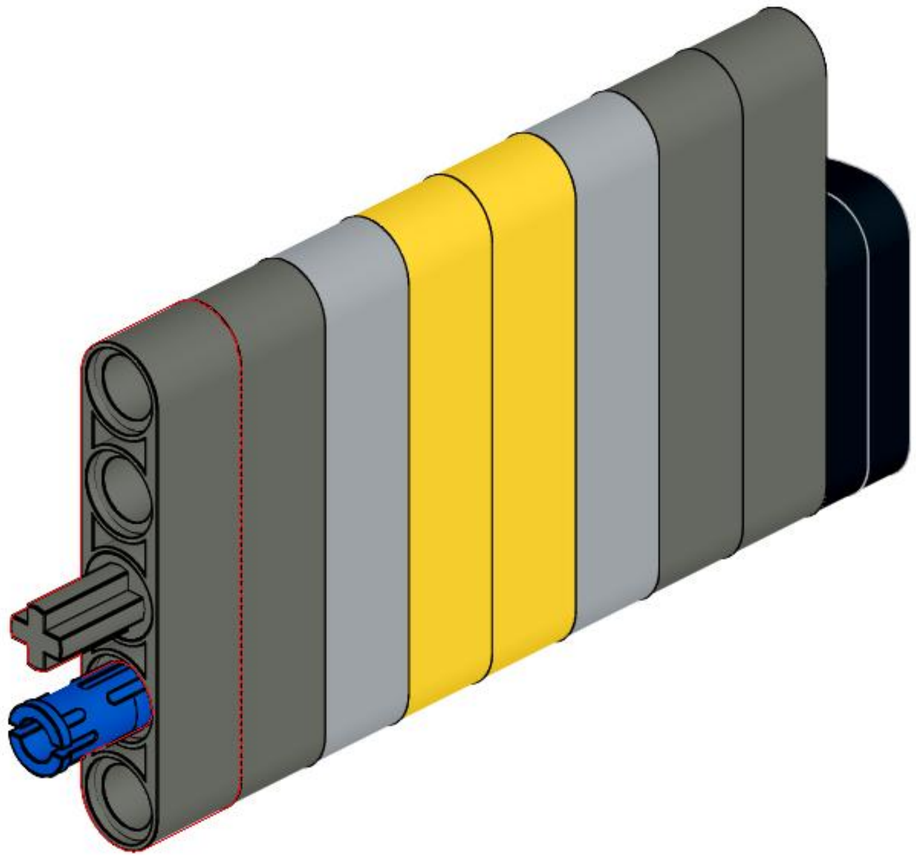

196

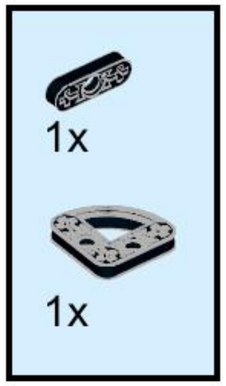

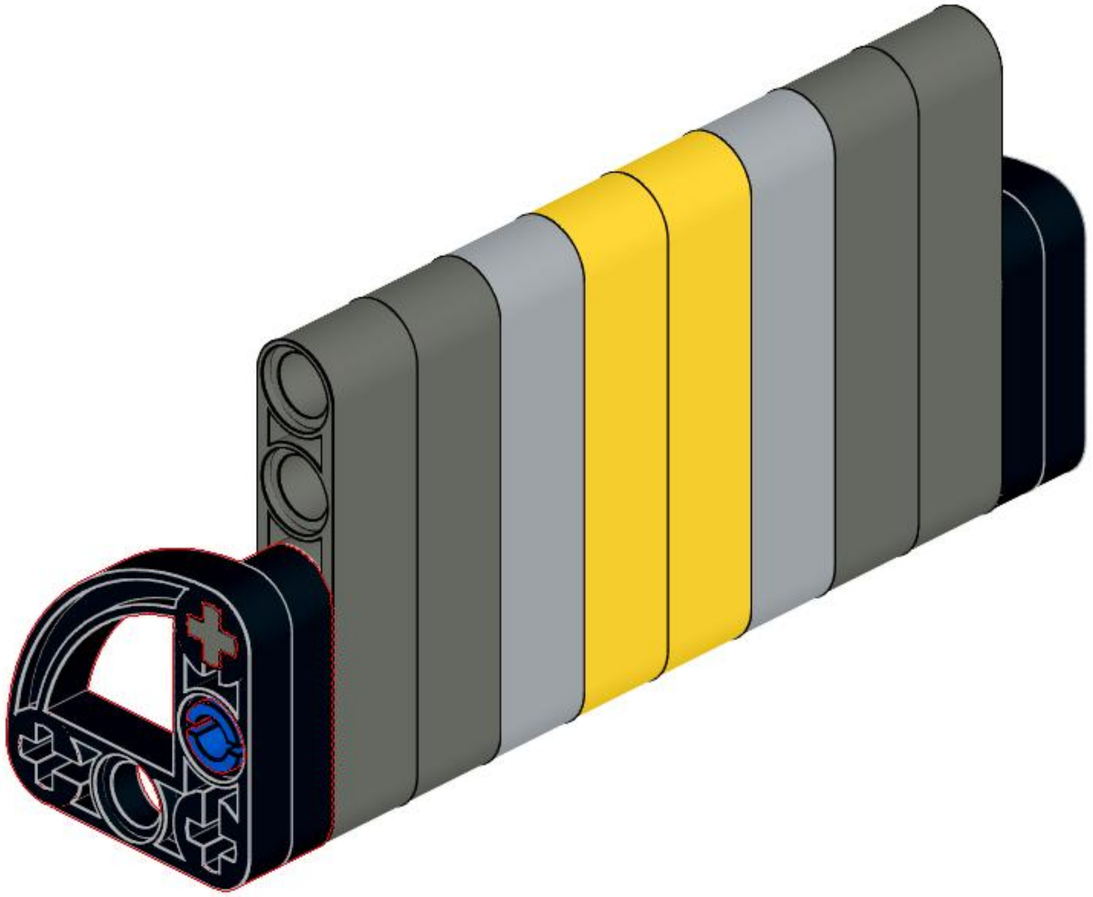

197

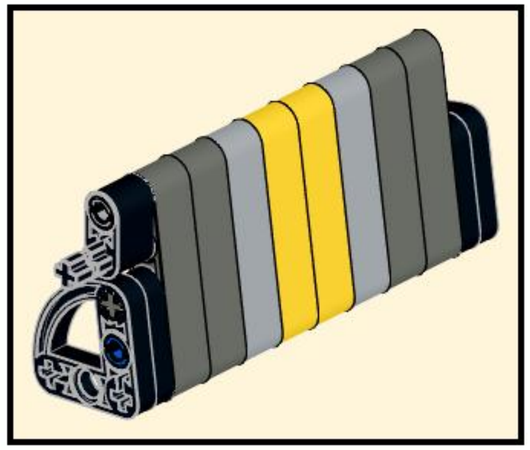

198

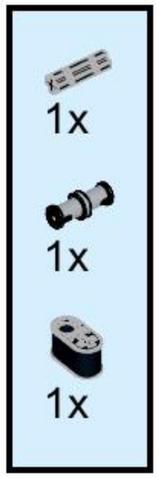

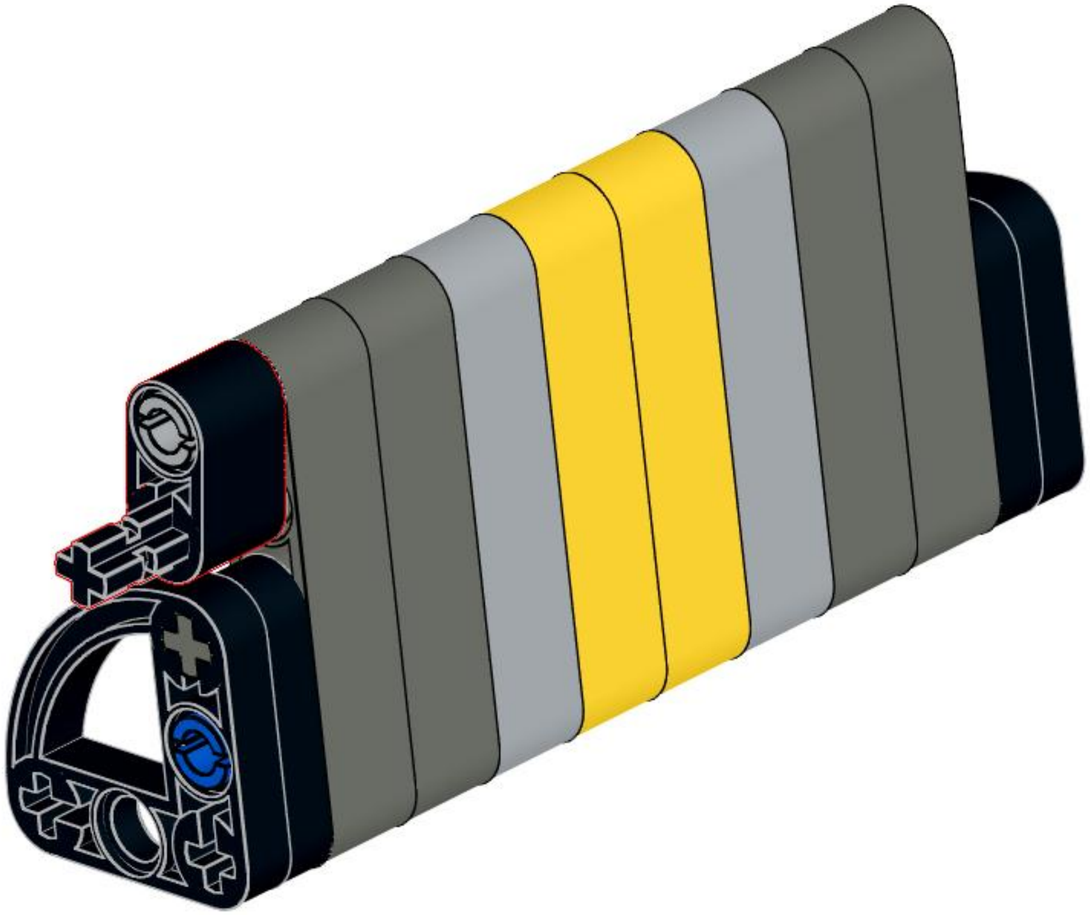

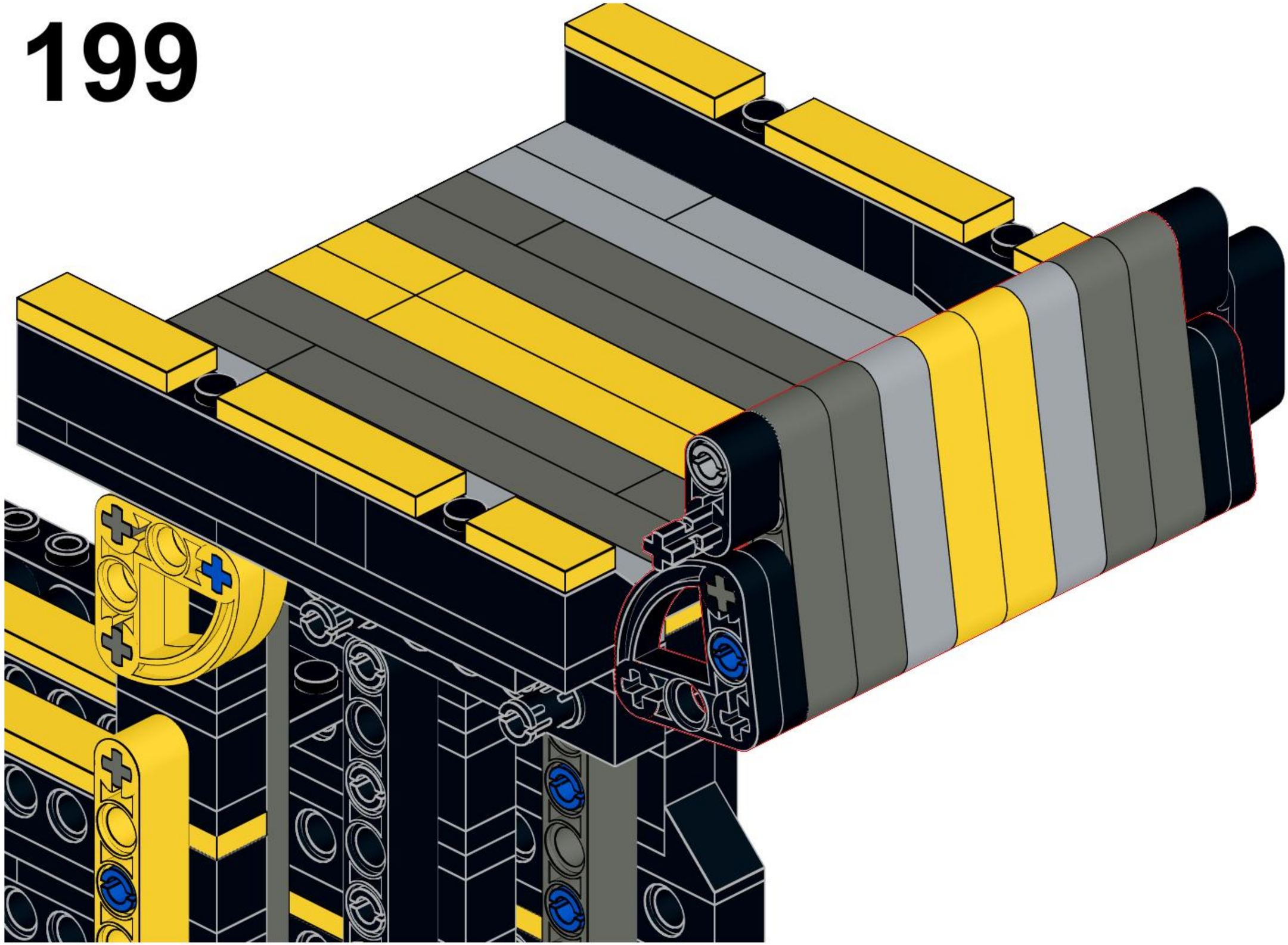

200

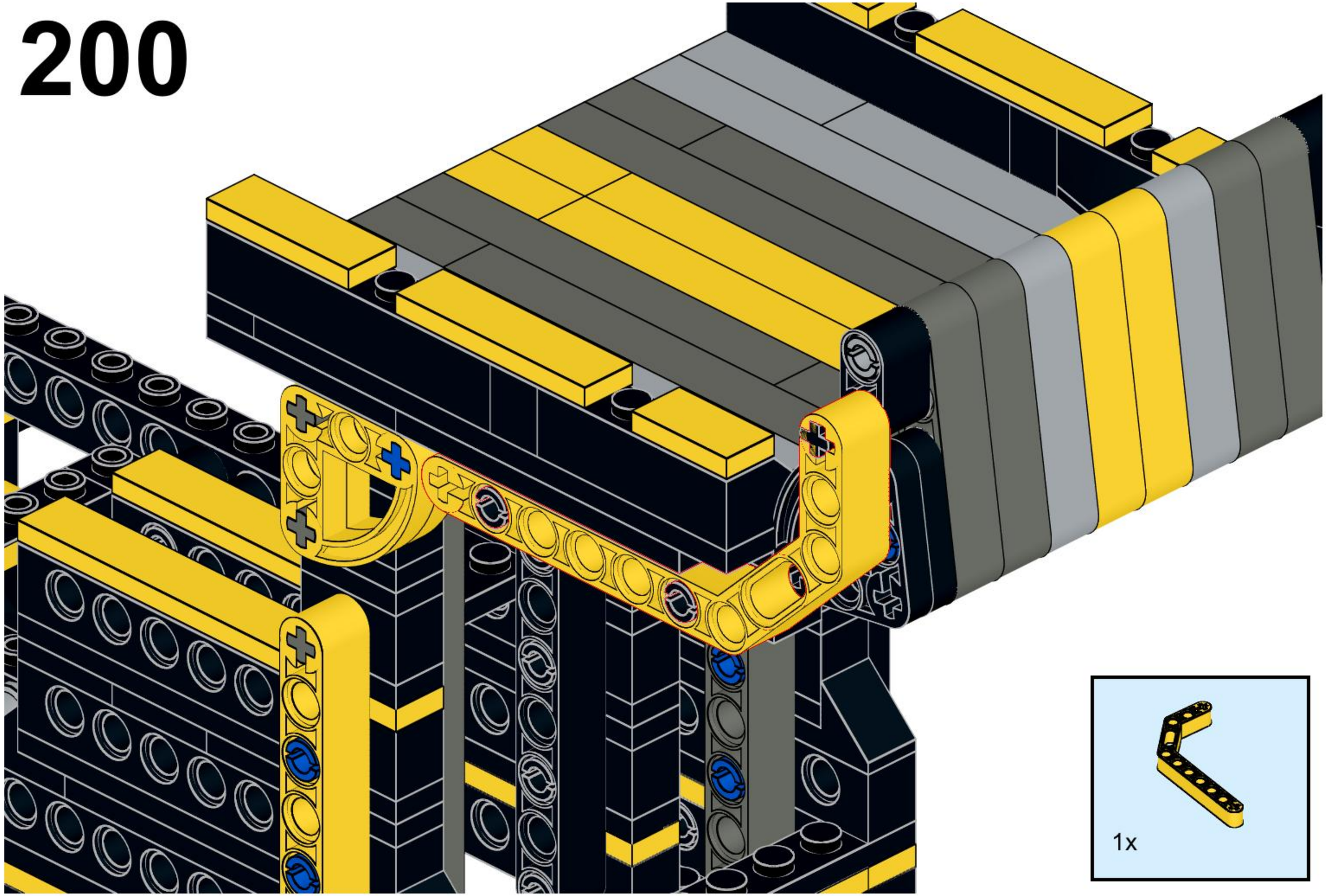

201

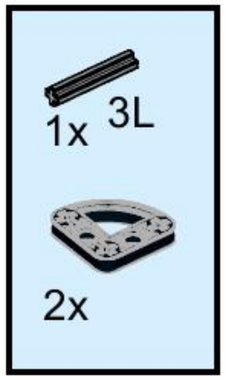

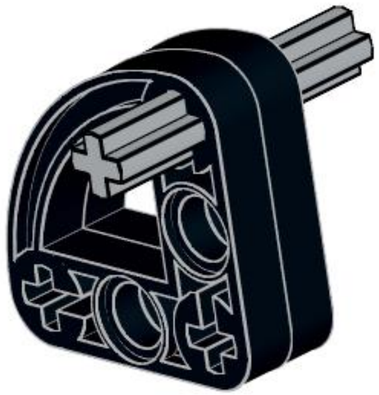

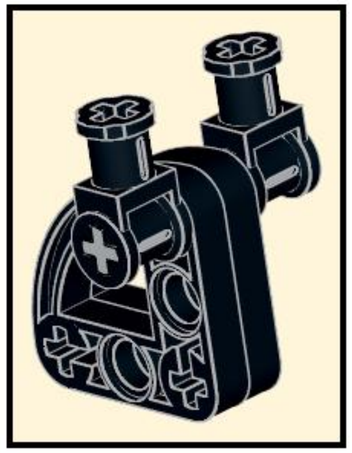

202

203

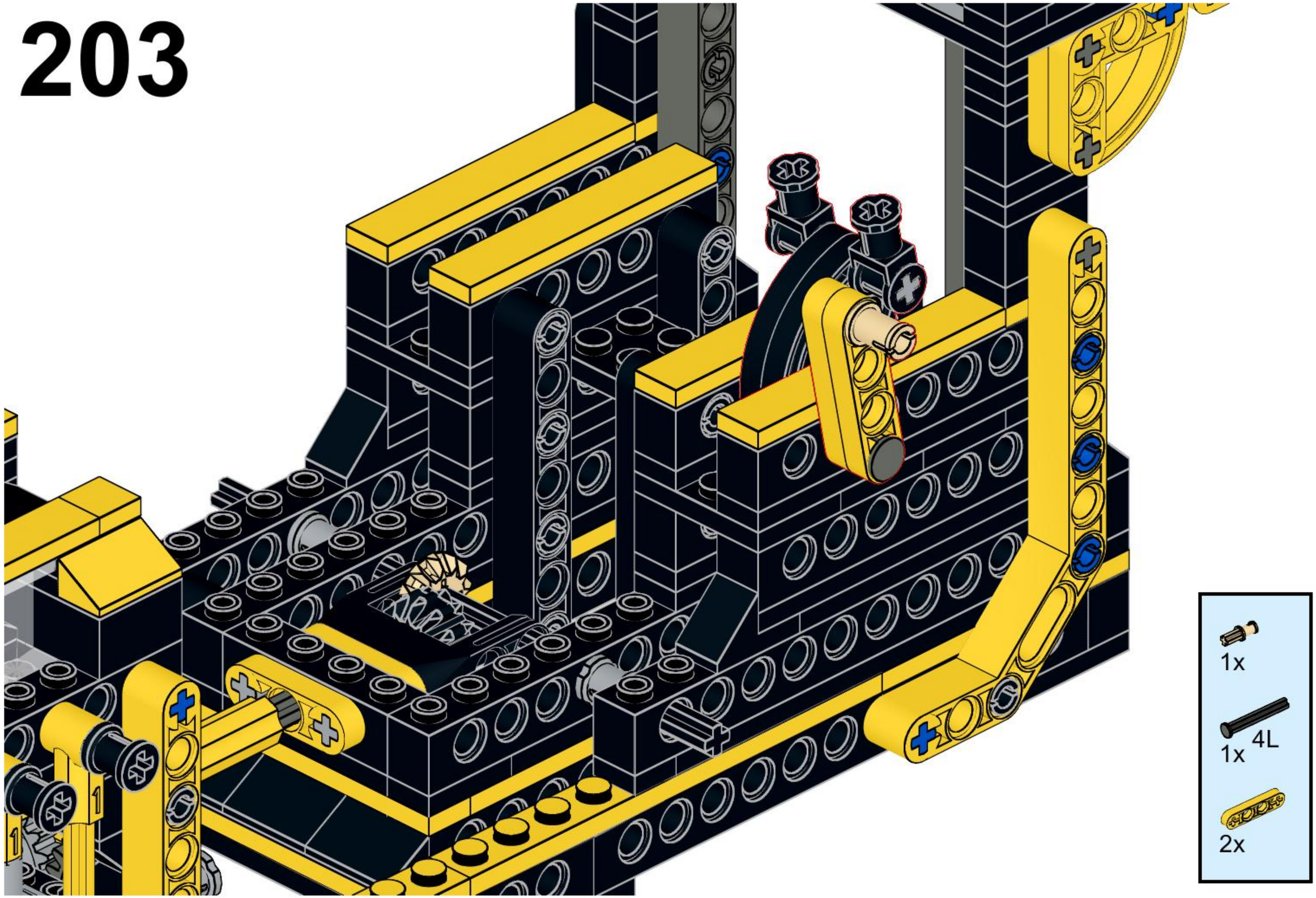

204

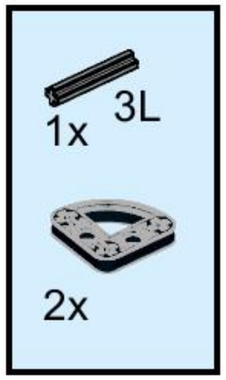

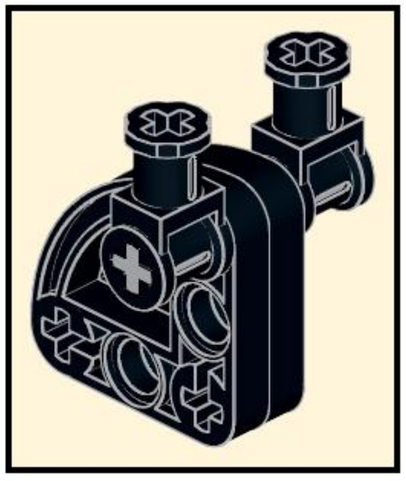

205

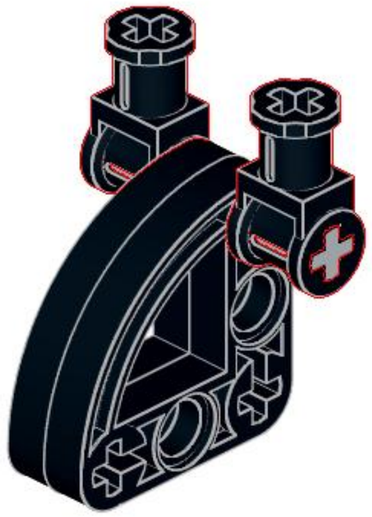

206

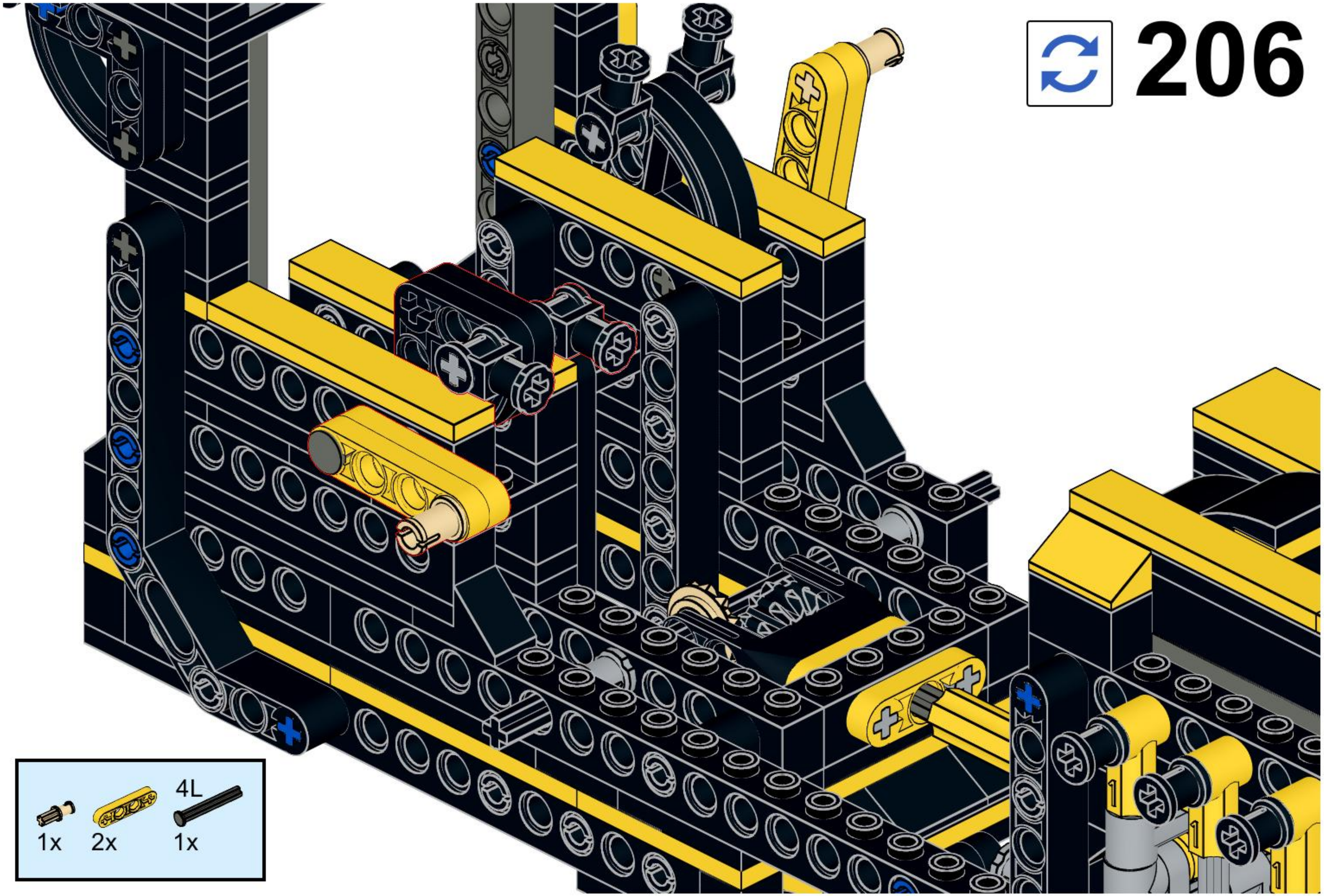

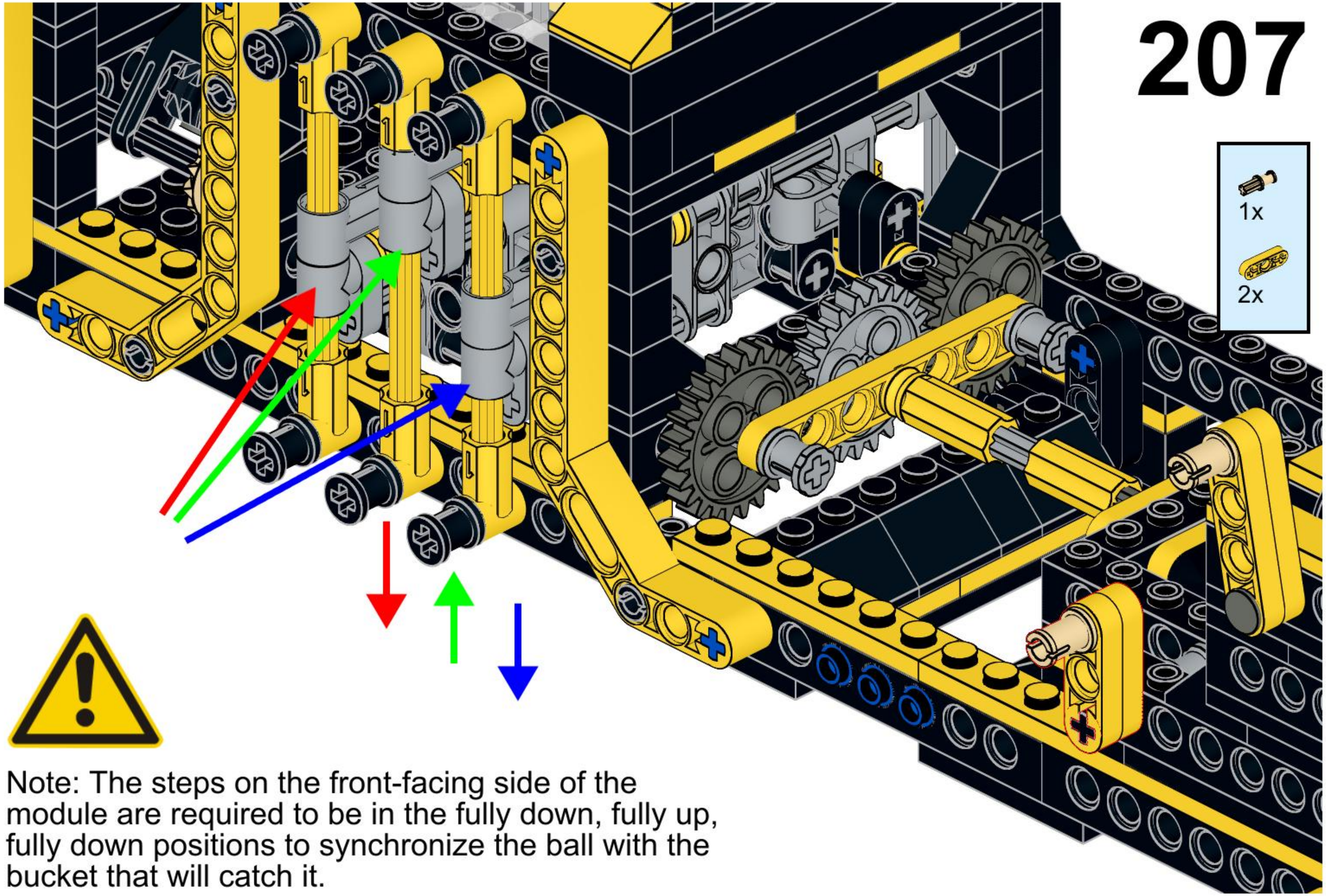

Note: The steps on the front-facing side of the module are required to be in the fully down, fully up, fully down positions to synchronize the ball with the bucket that will catch it.

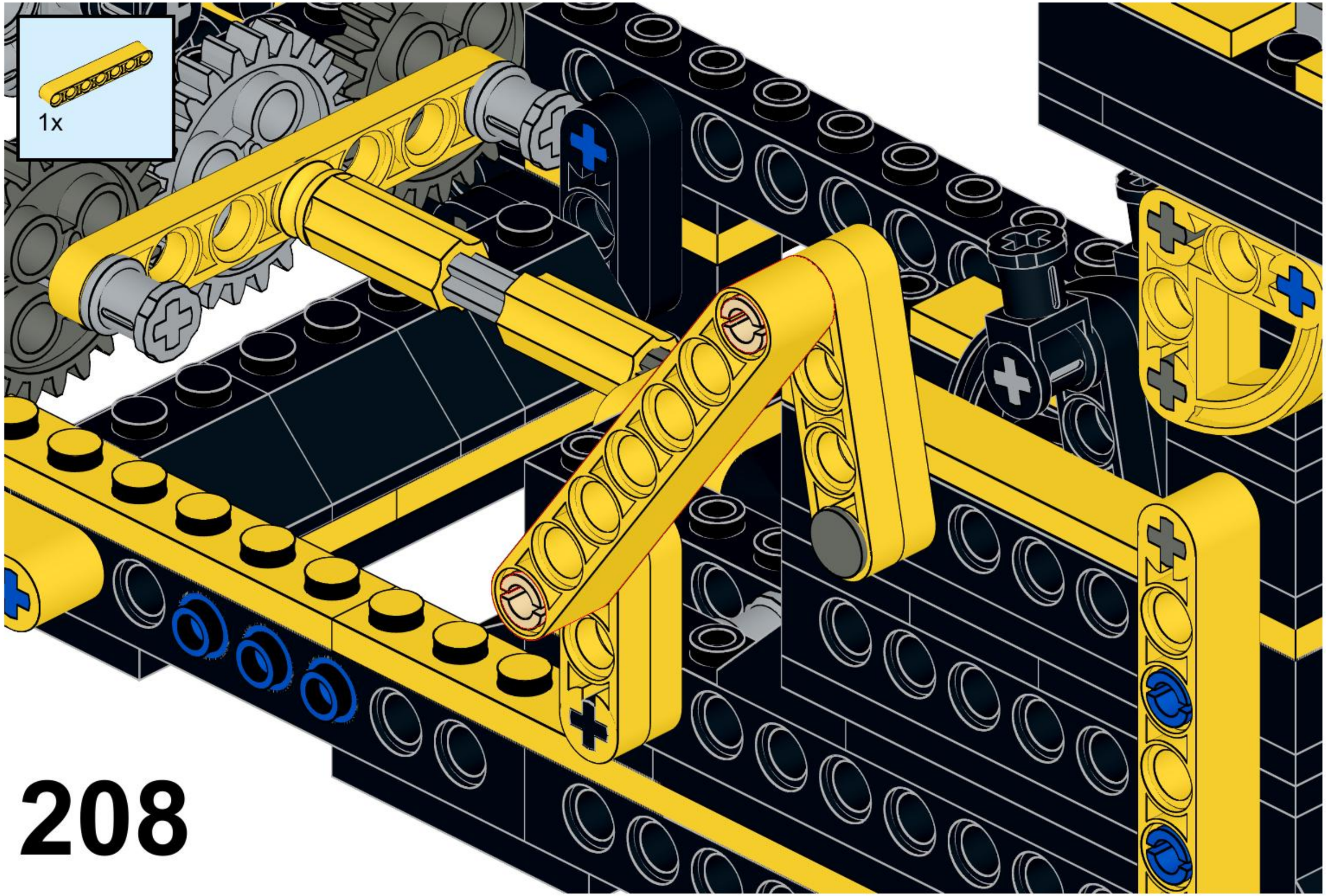

208

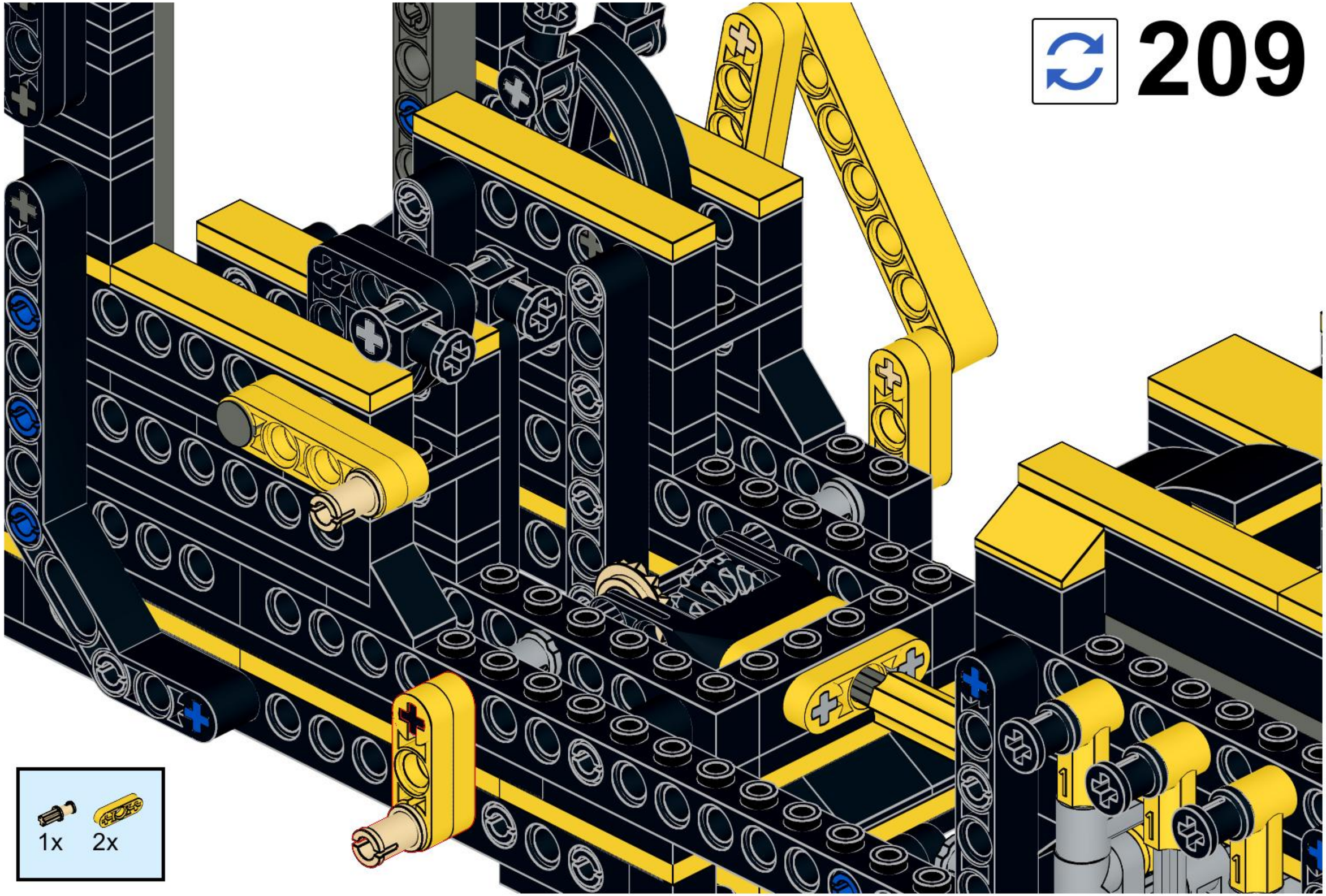
1x
2x

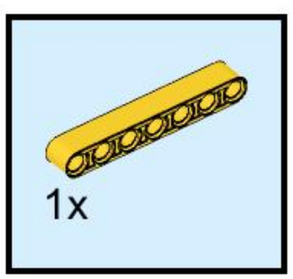
1x

211

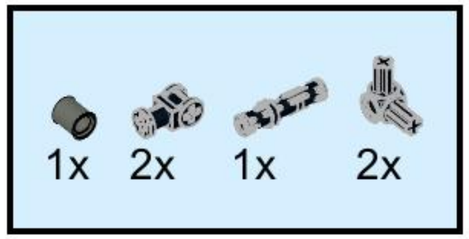

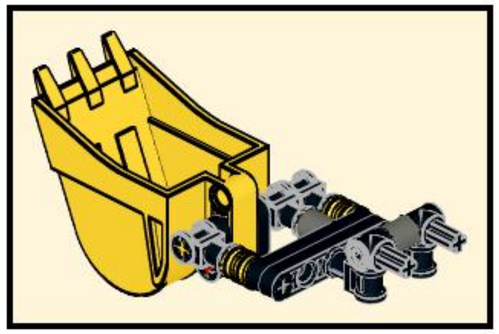

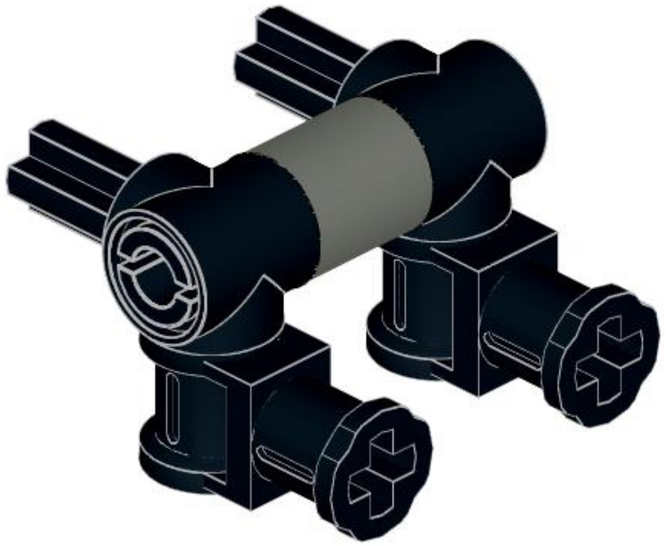

212

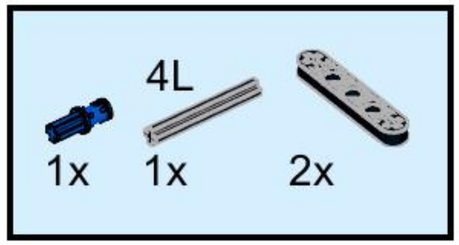

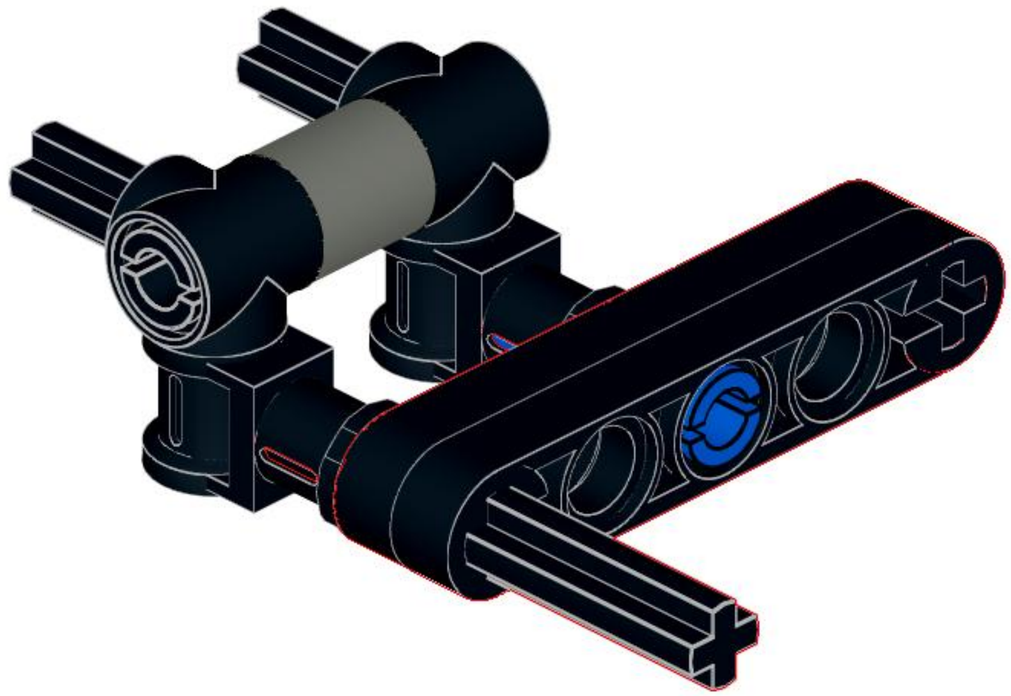

213

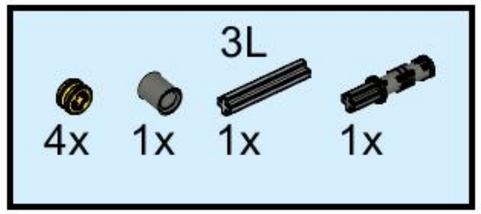

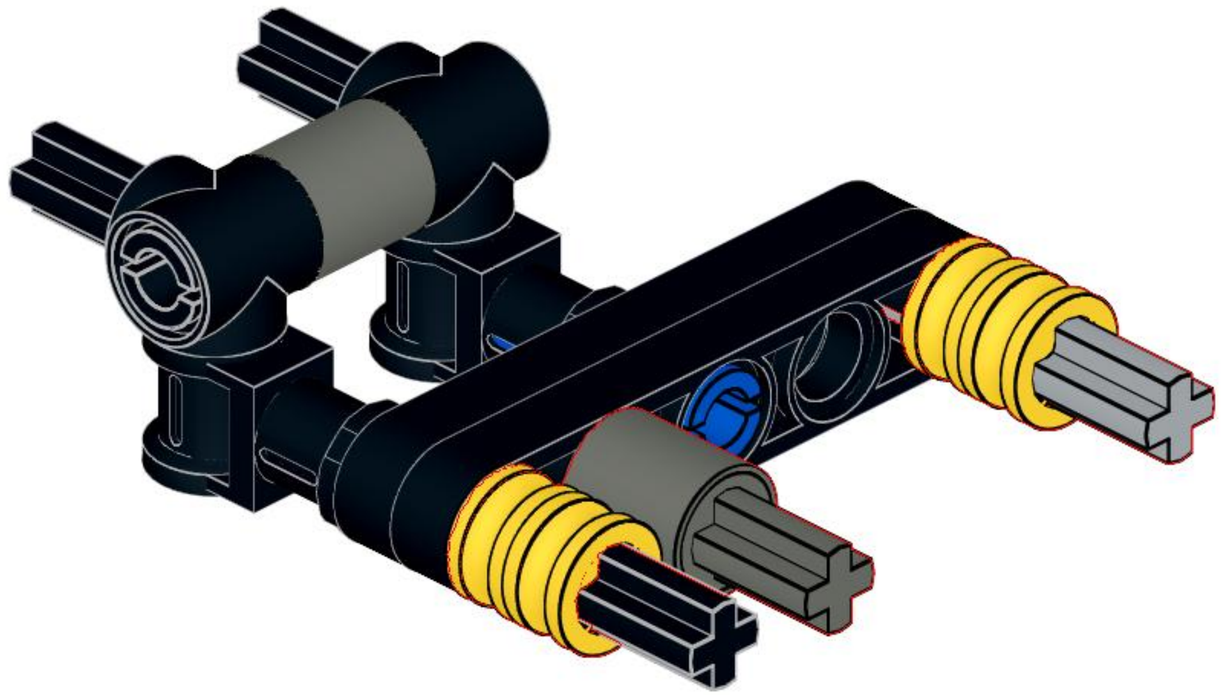

214

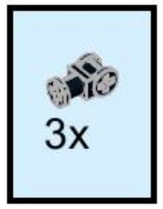

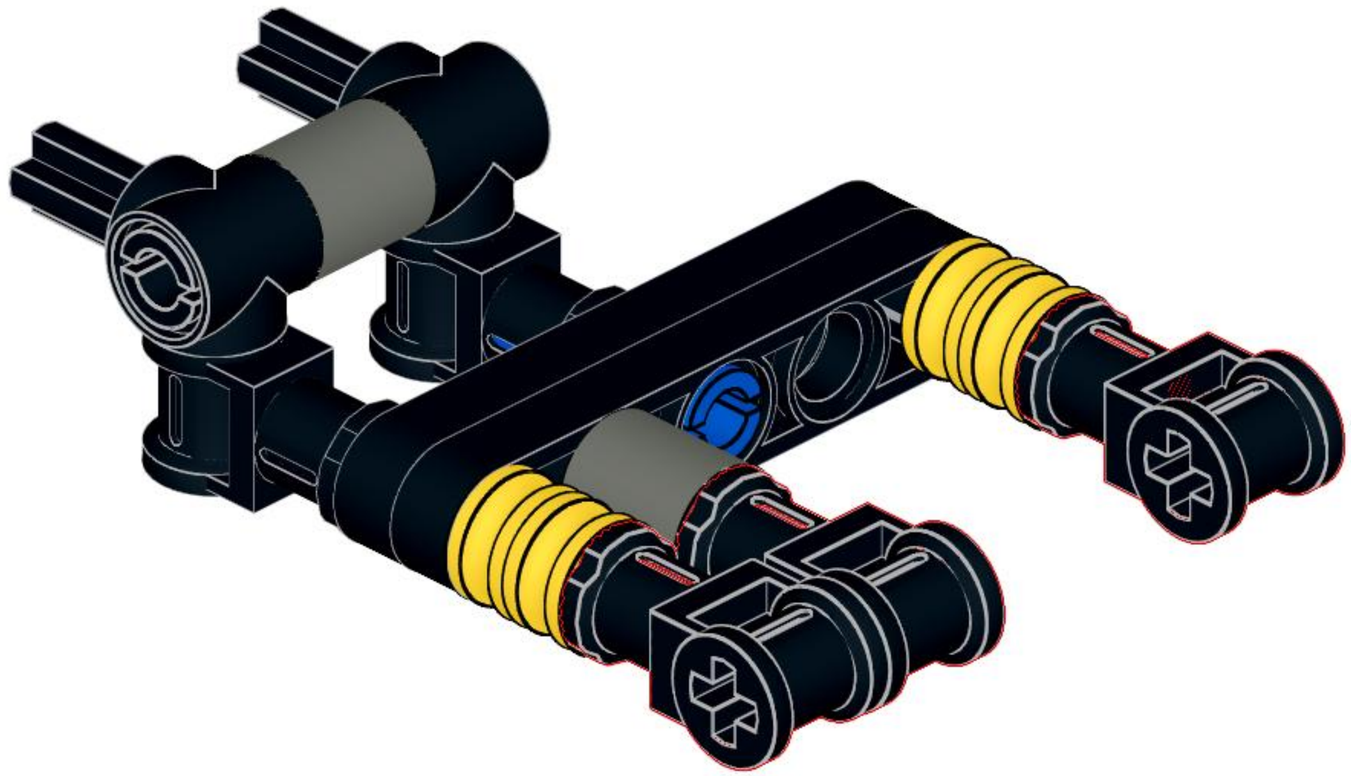

215

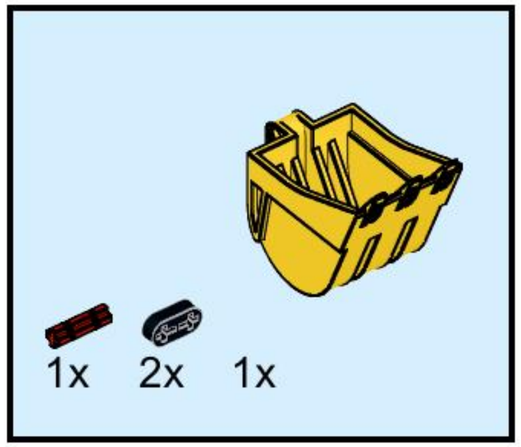

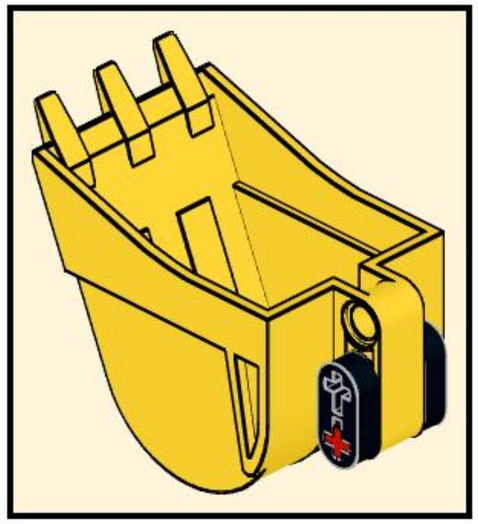

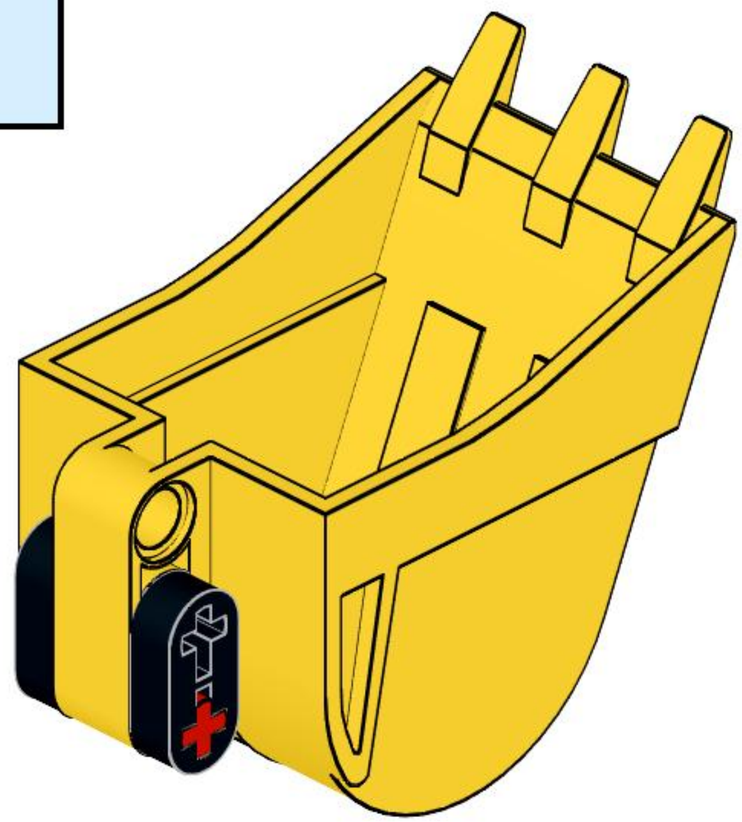

216

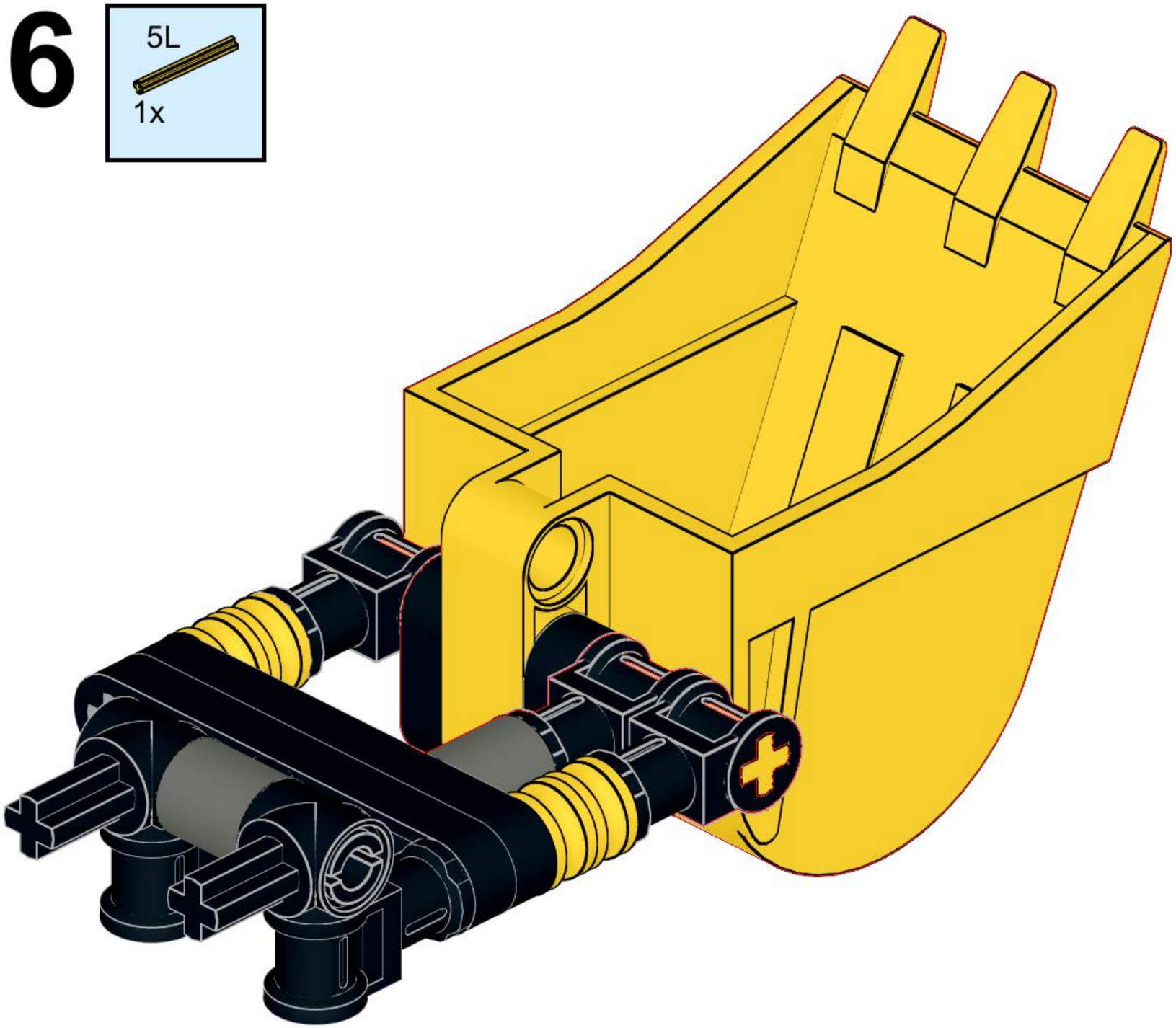

217

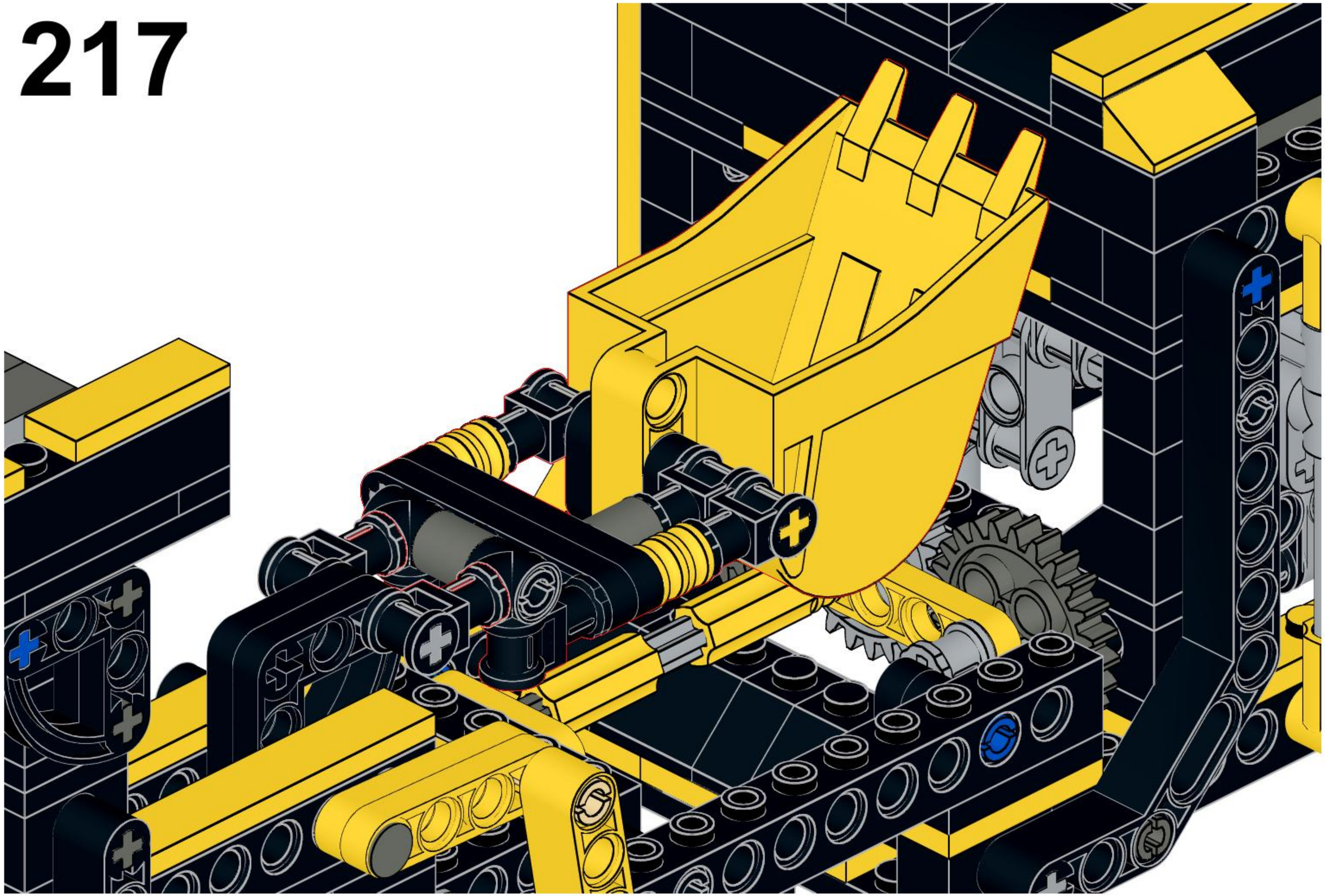

218

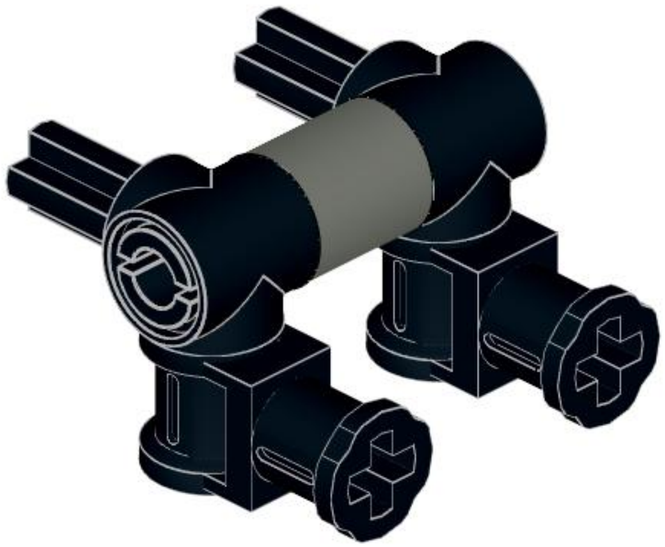

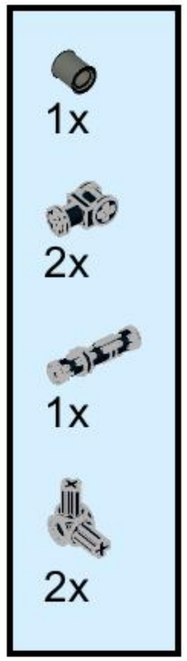

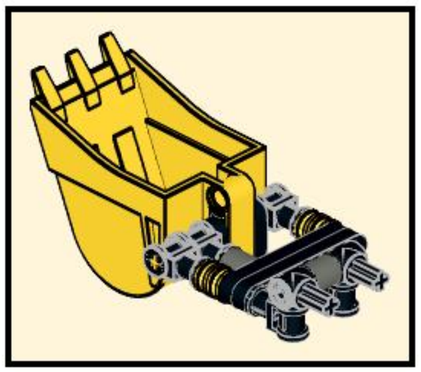

219

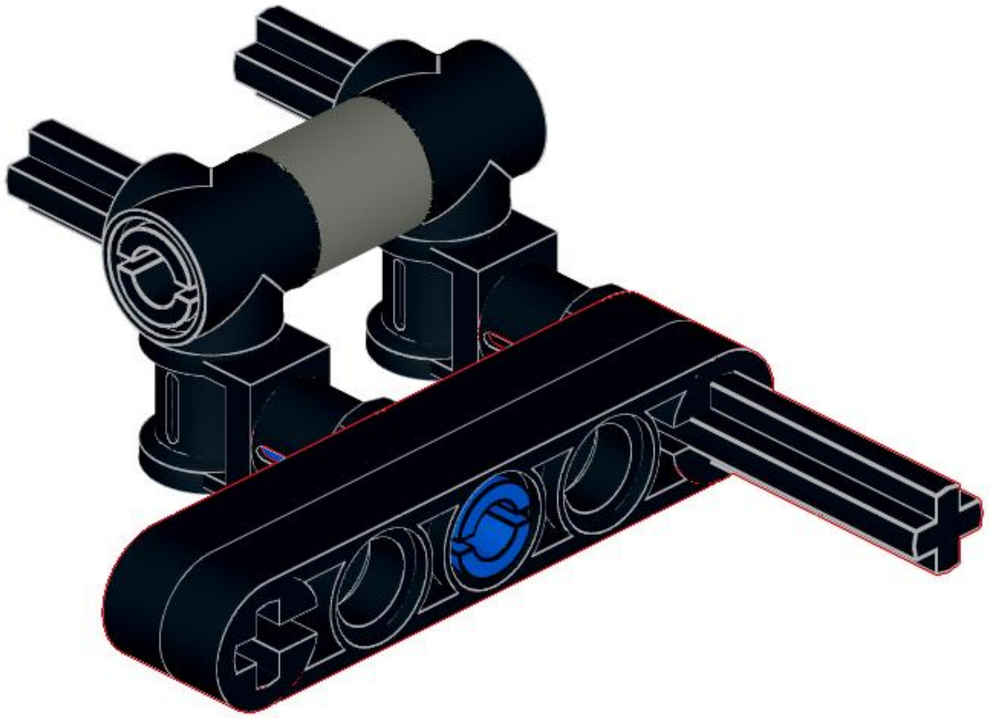

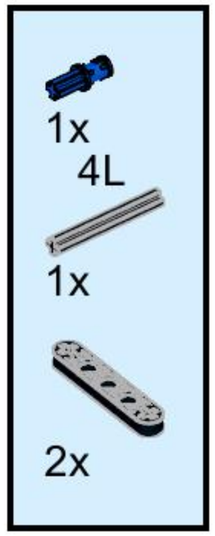

220

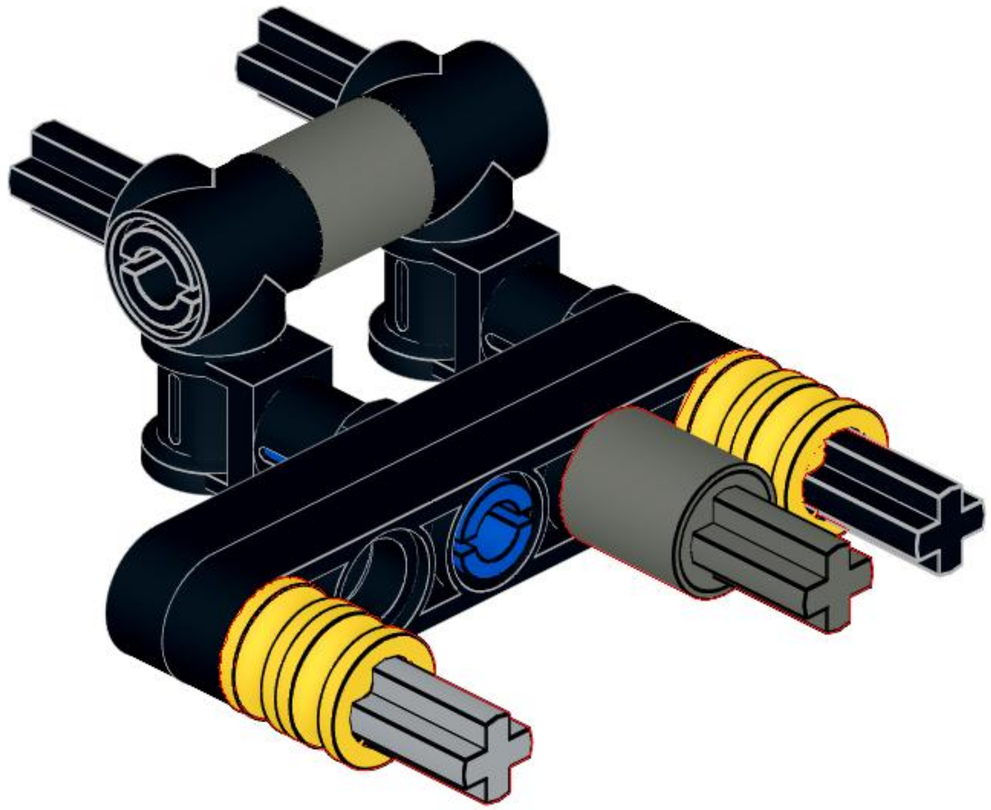

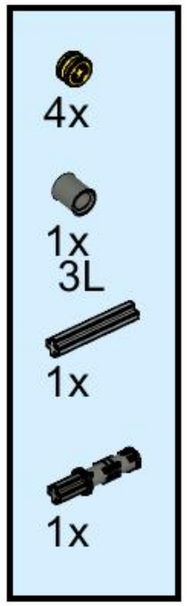

221

3x

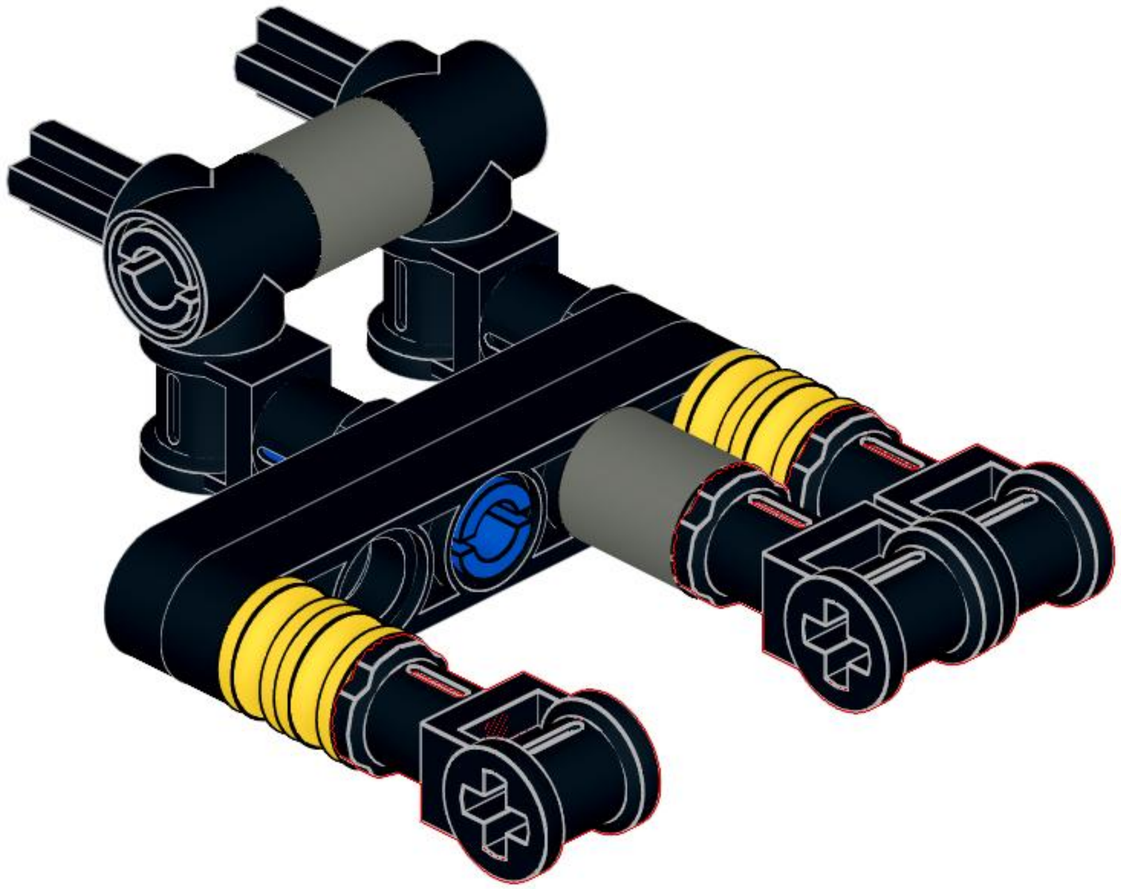

222

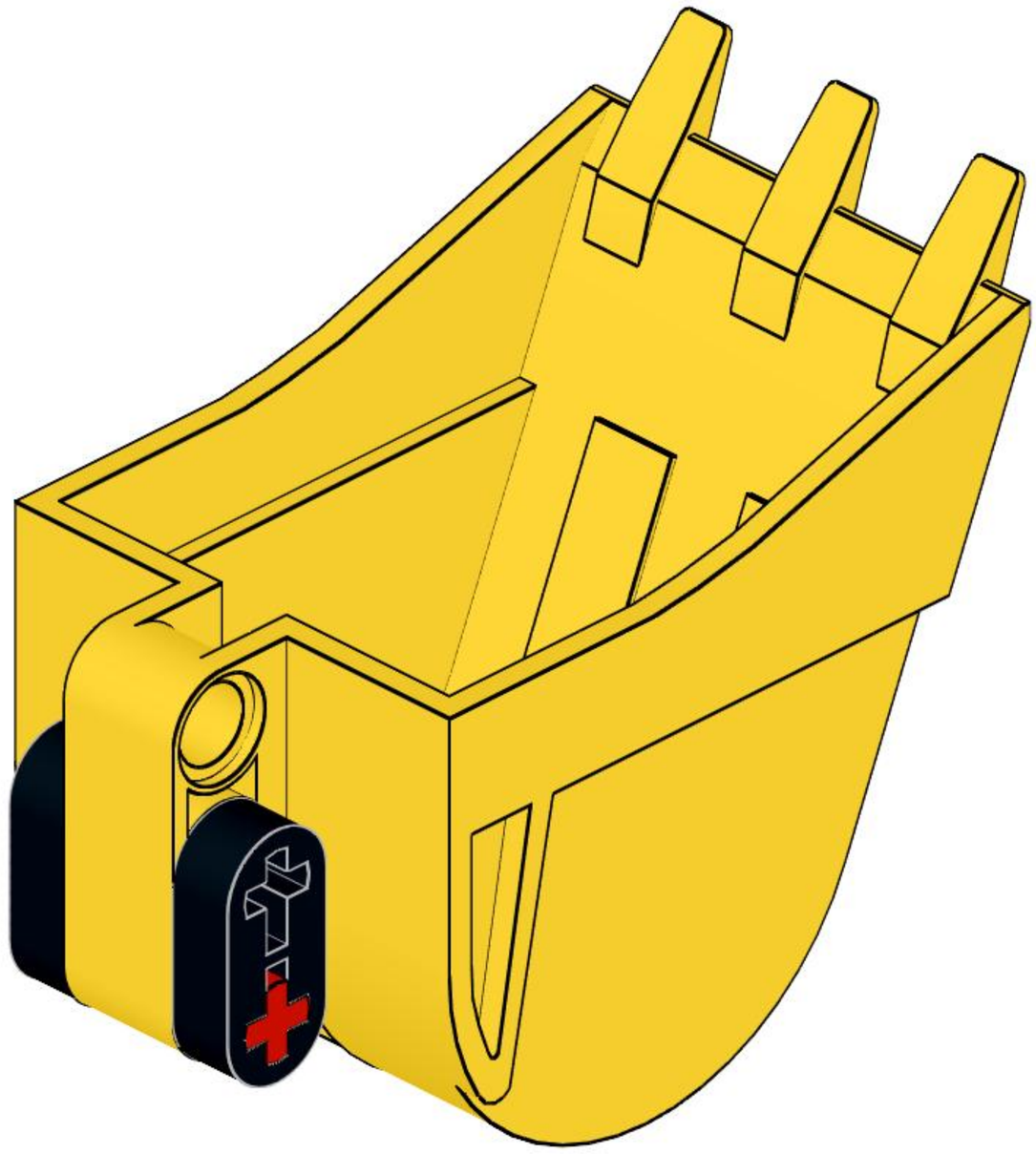

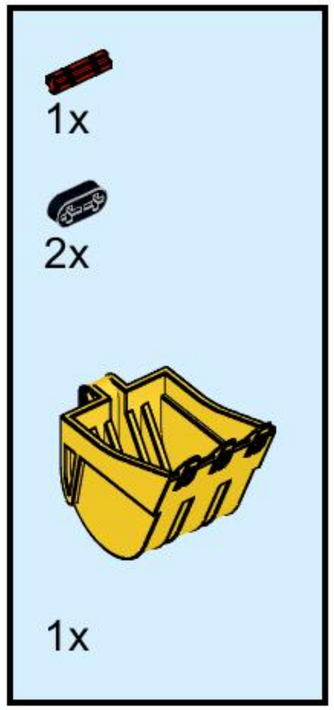

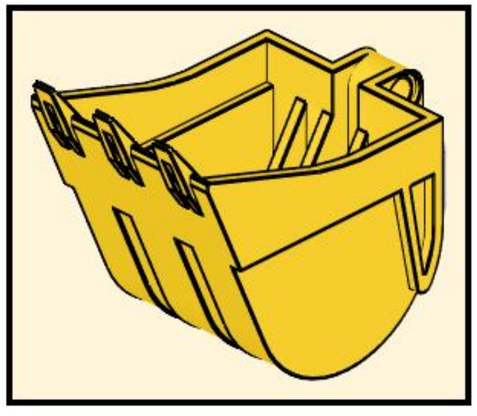

223

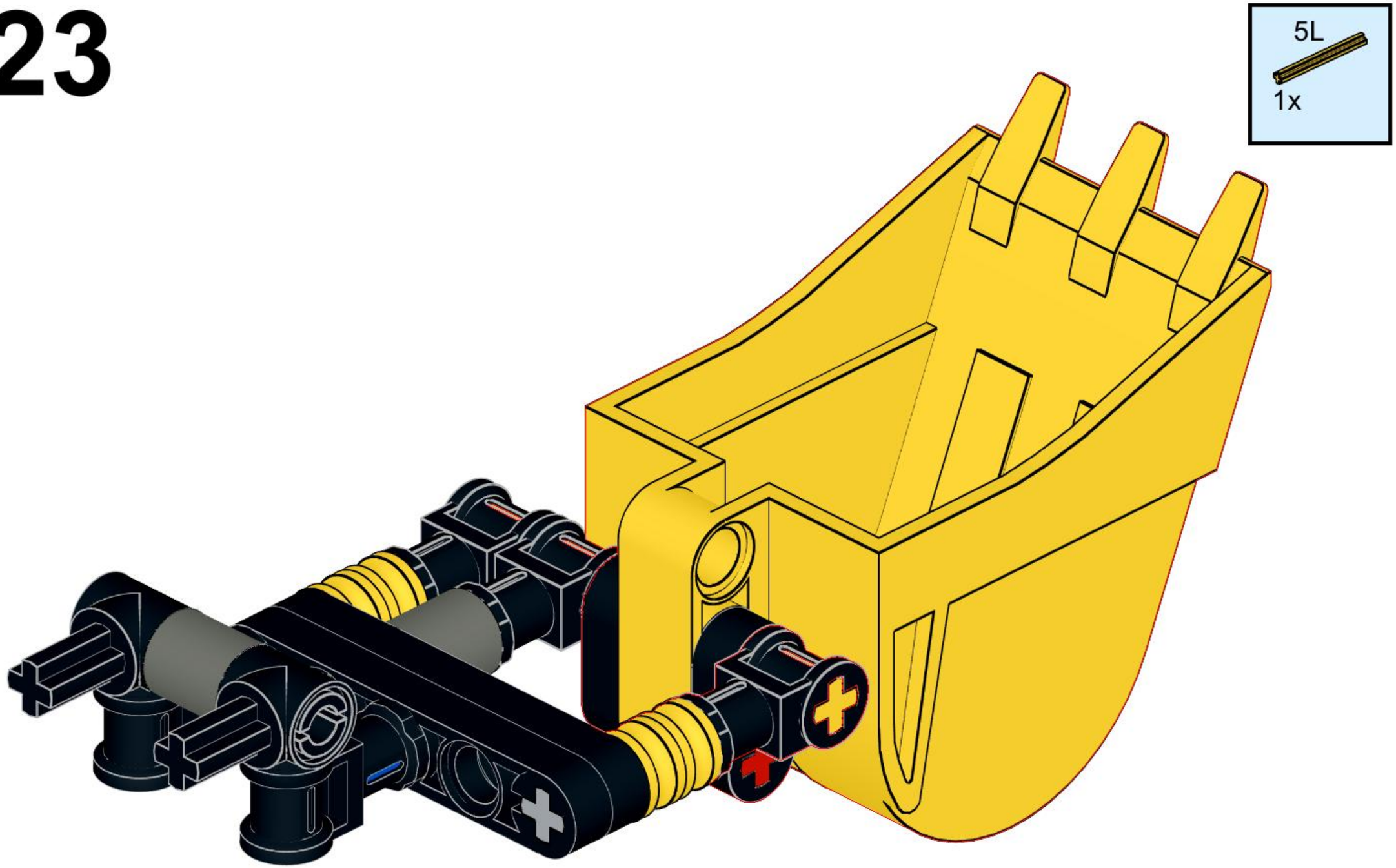

224

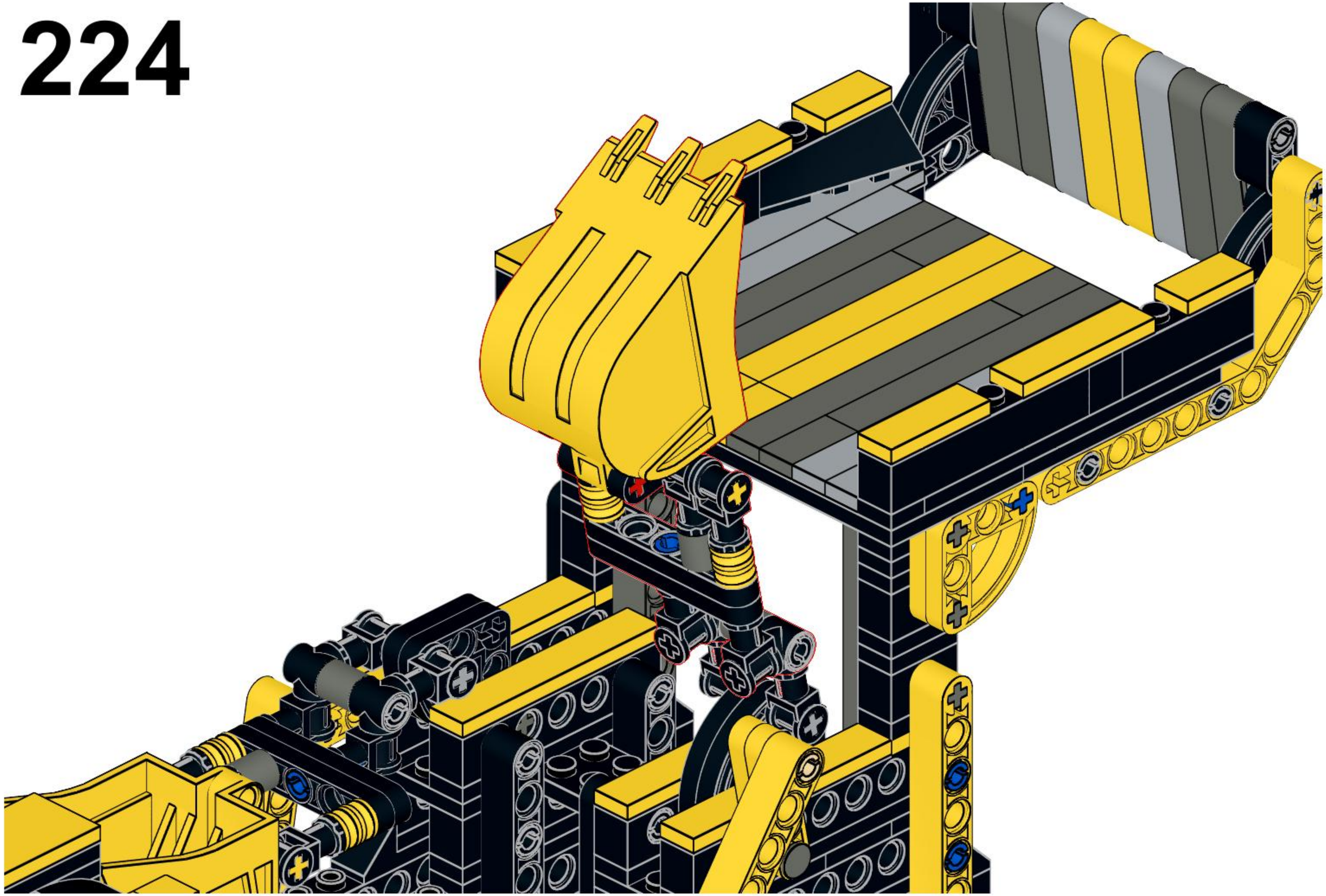

225

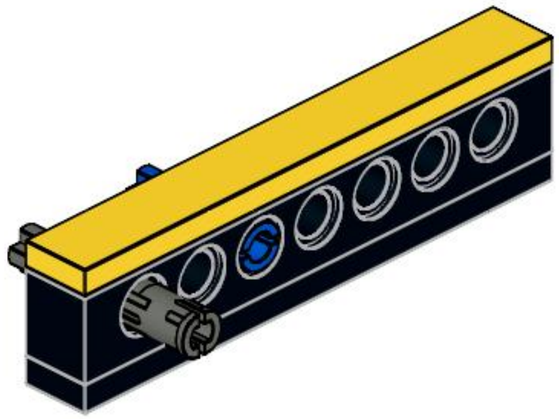

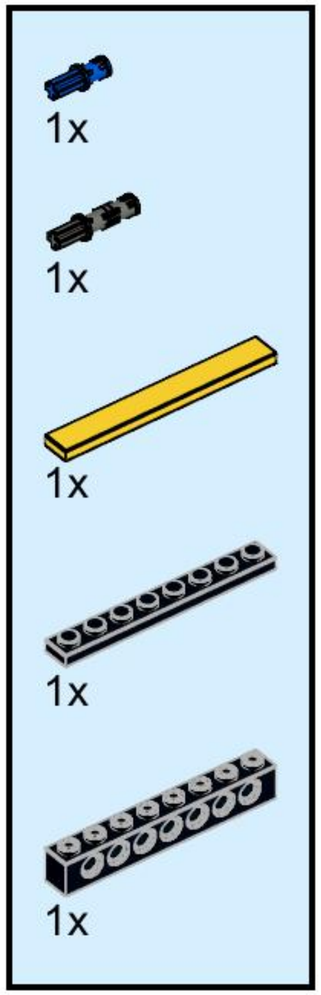

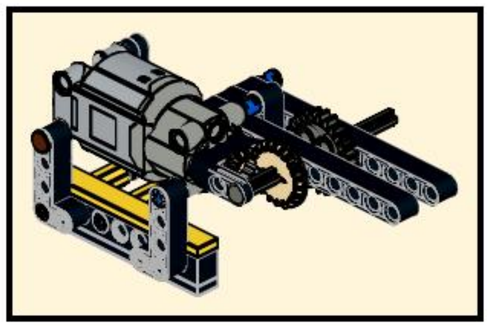

226

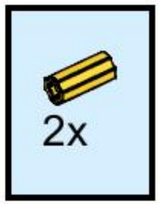

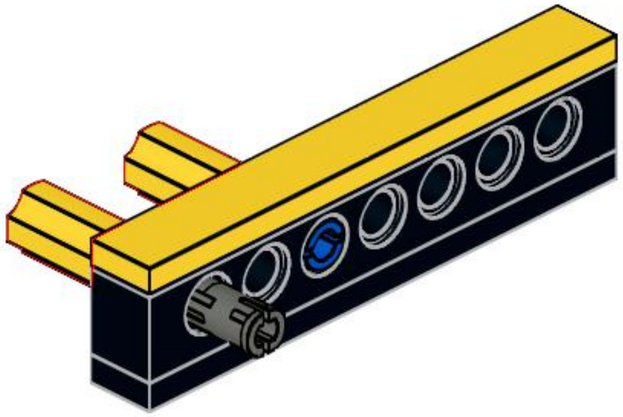

227

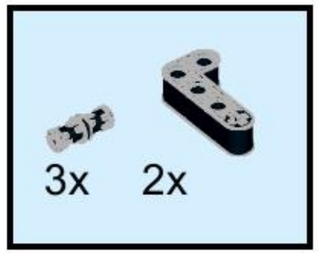

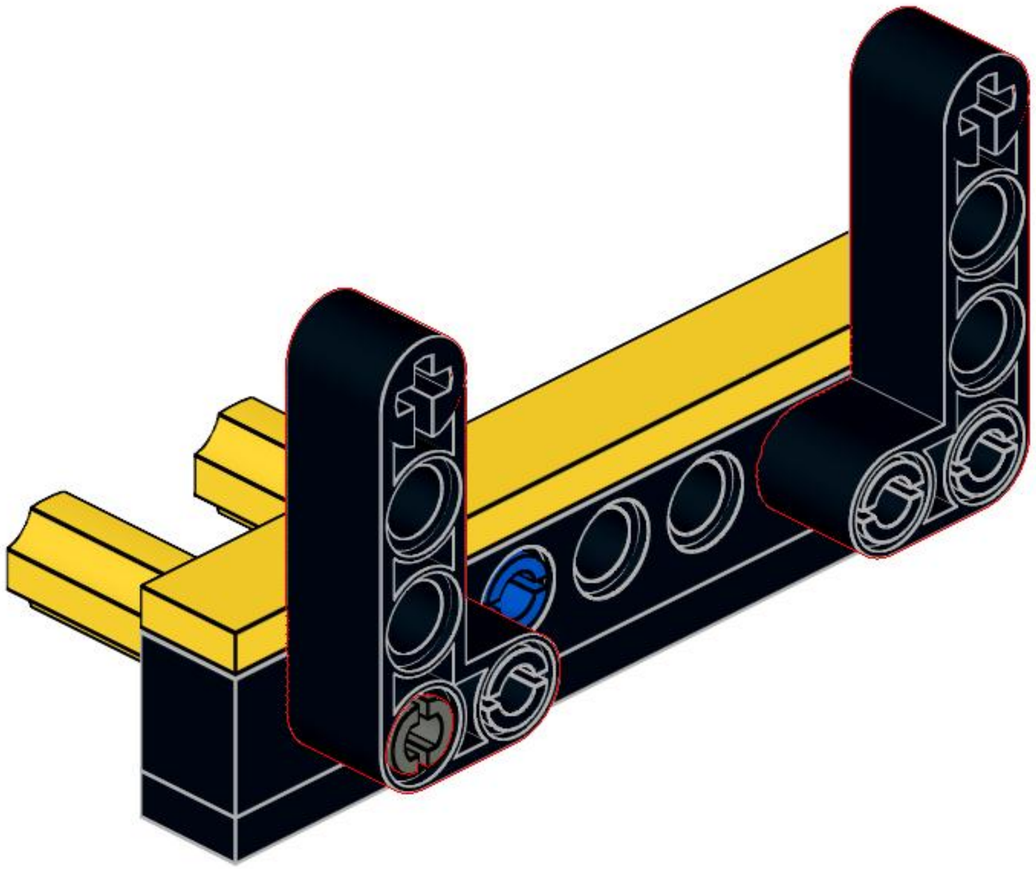

228

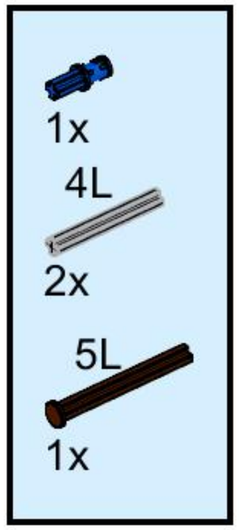

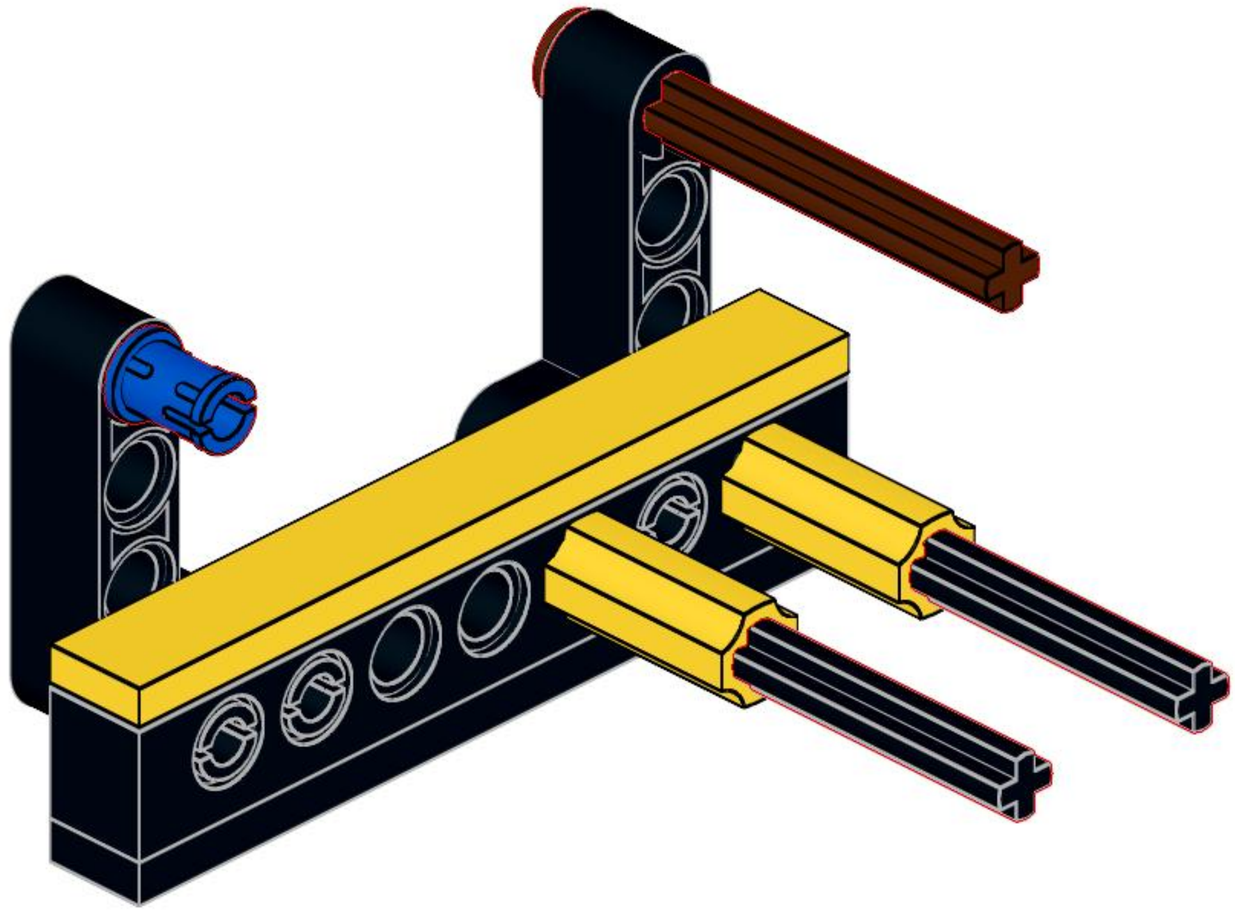

229

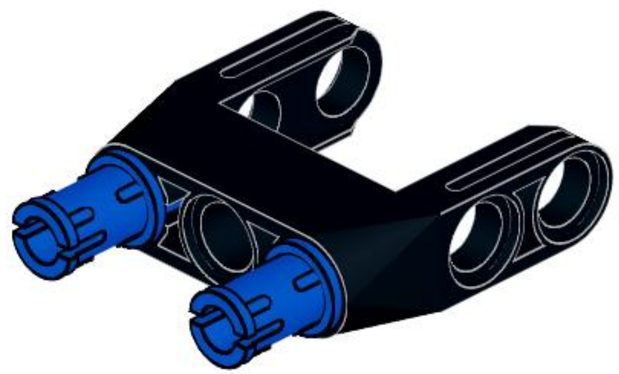

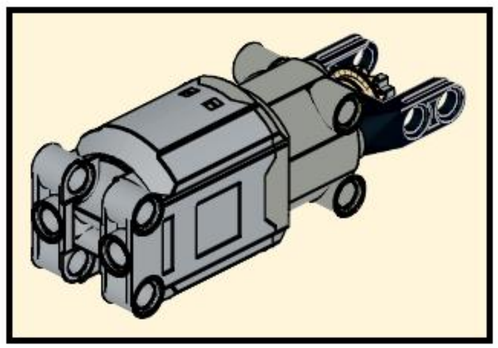

230

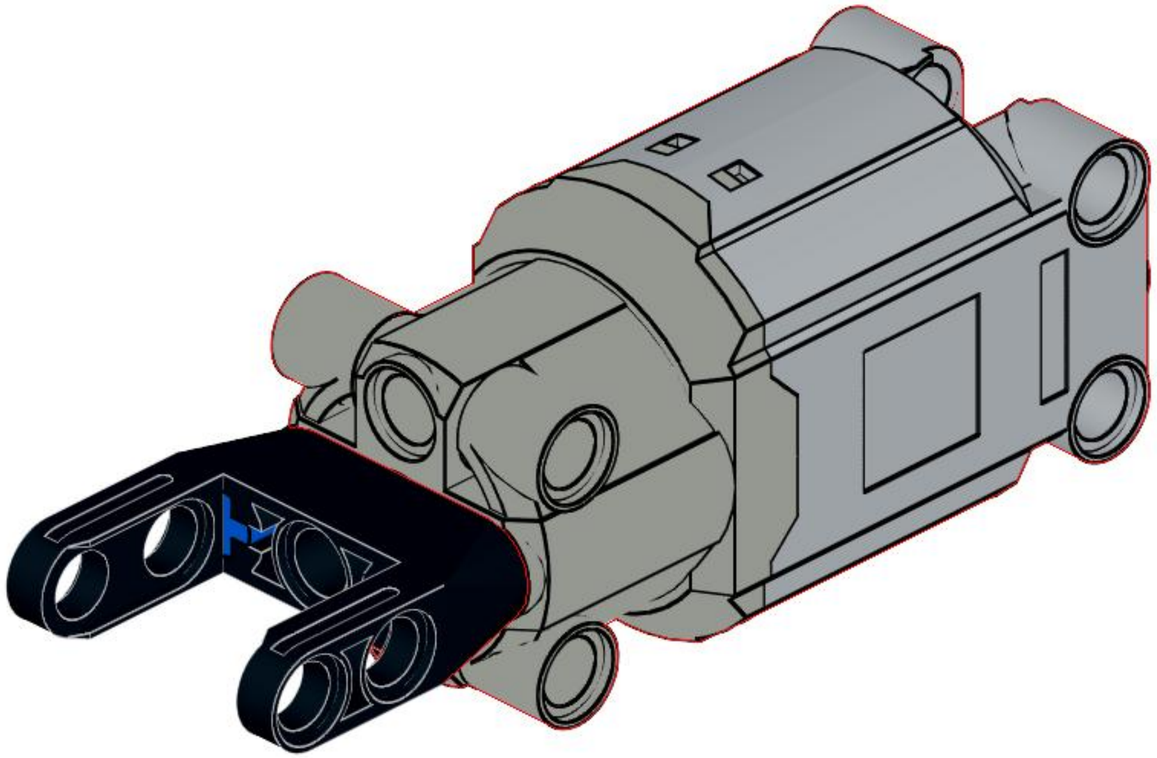

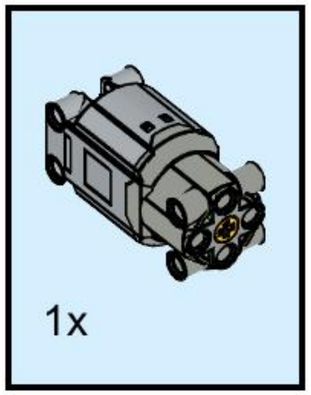

231

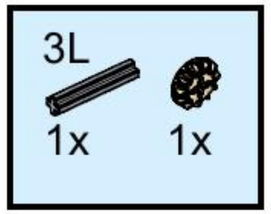

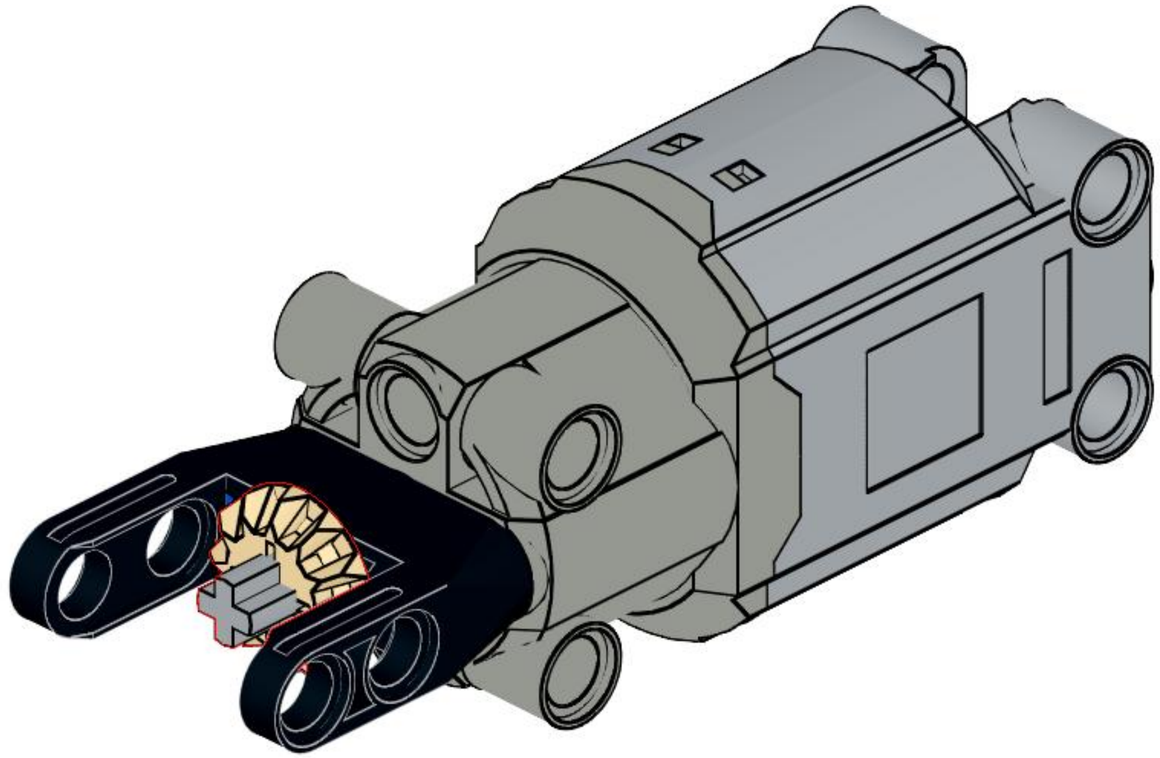

232

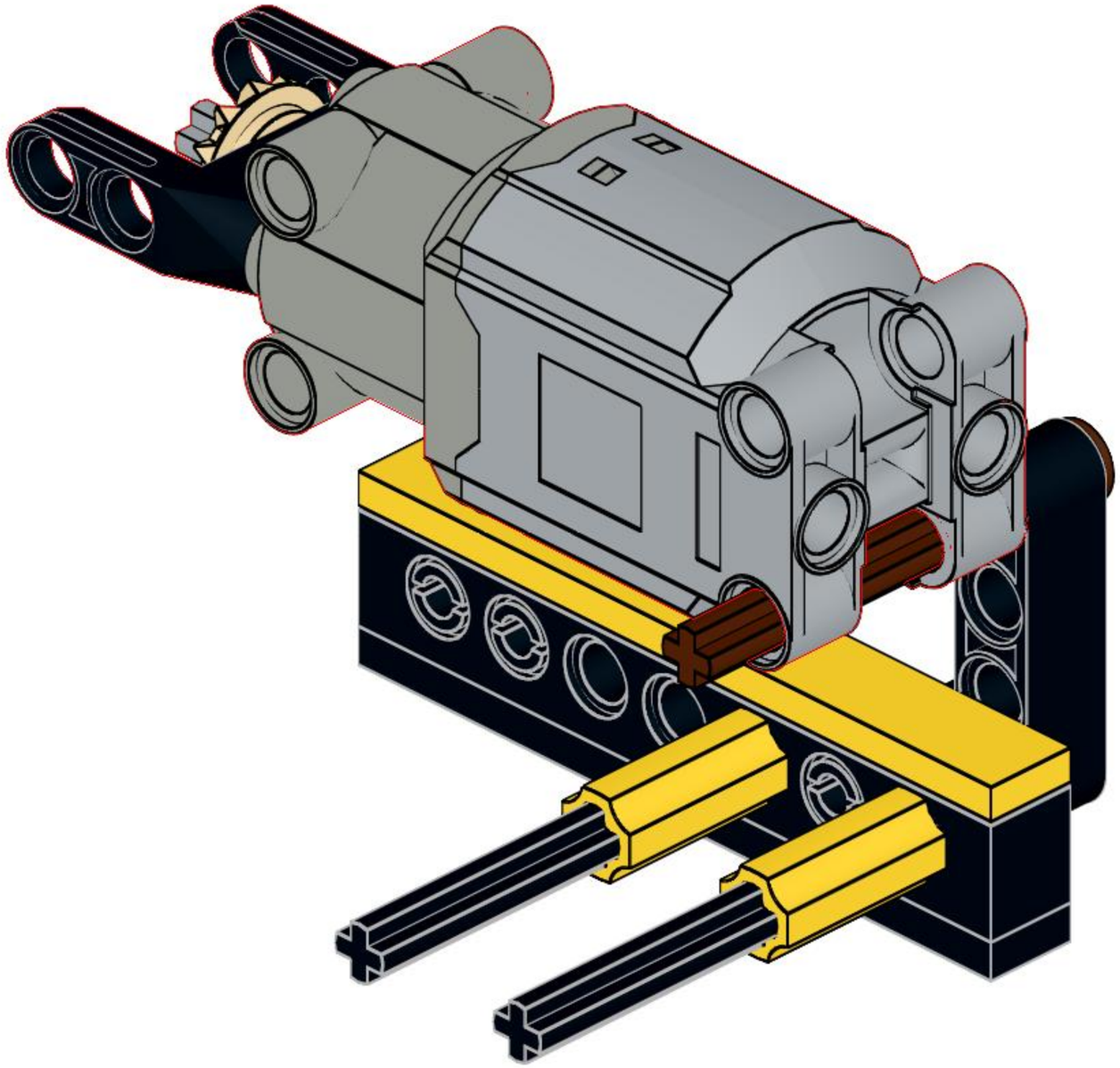

233

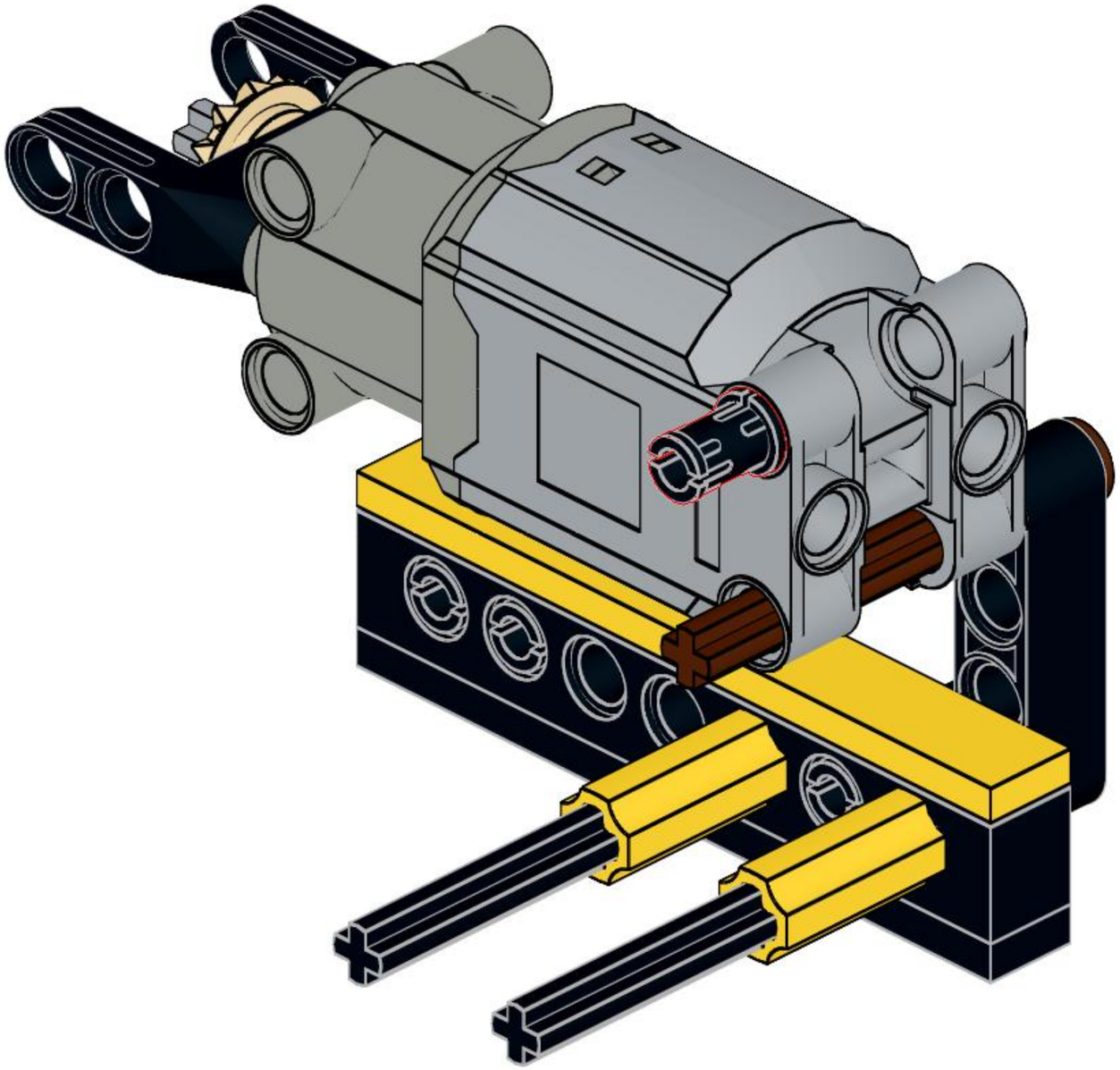

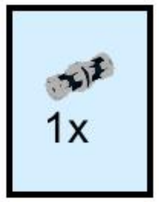

234

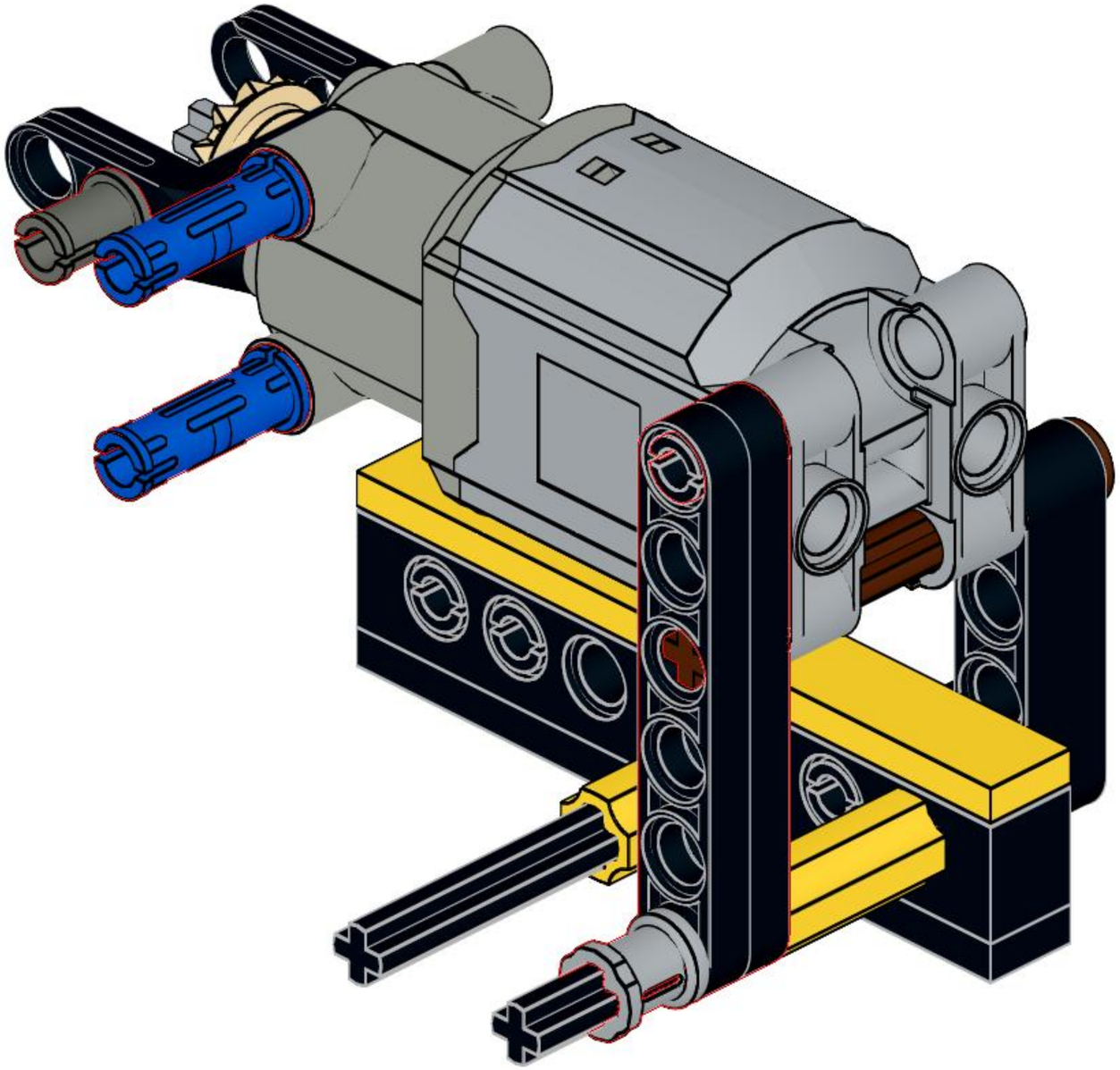

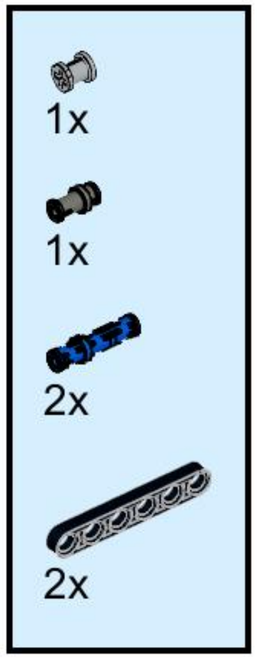

235

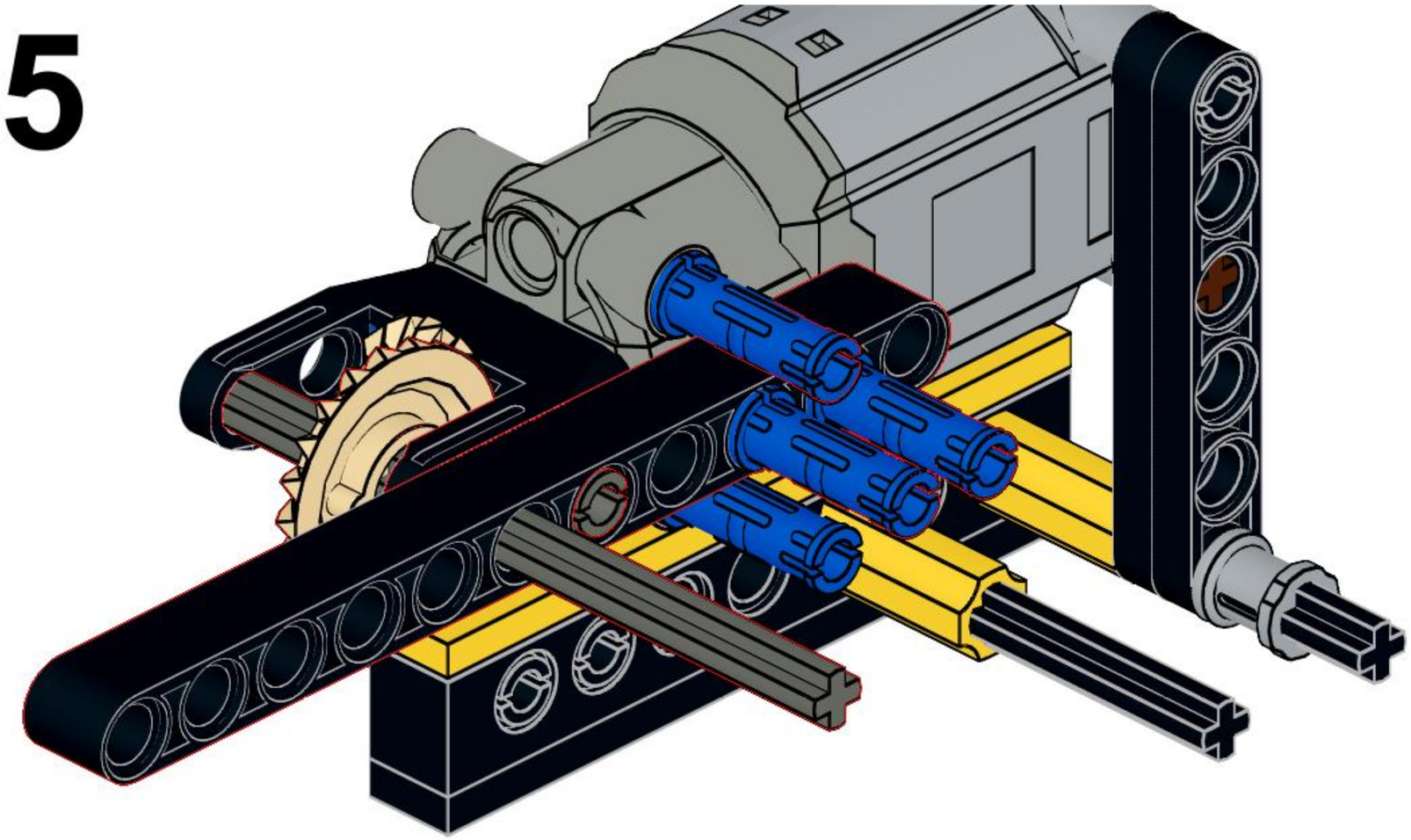

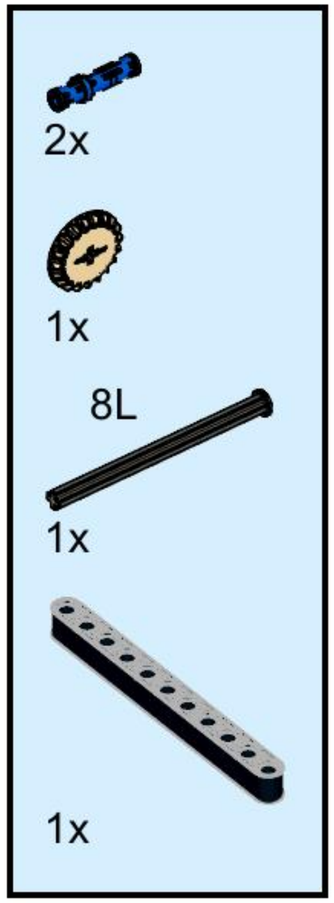

236

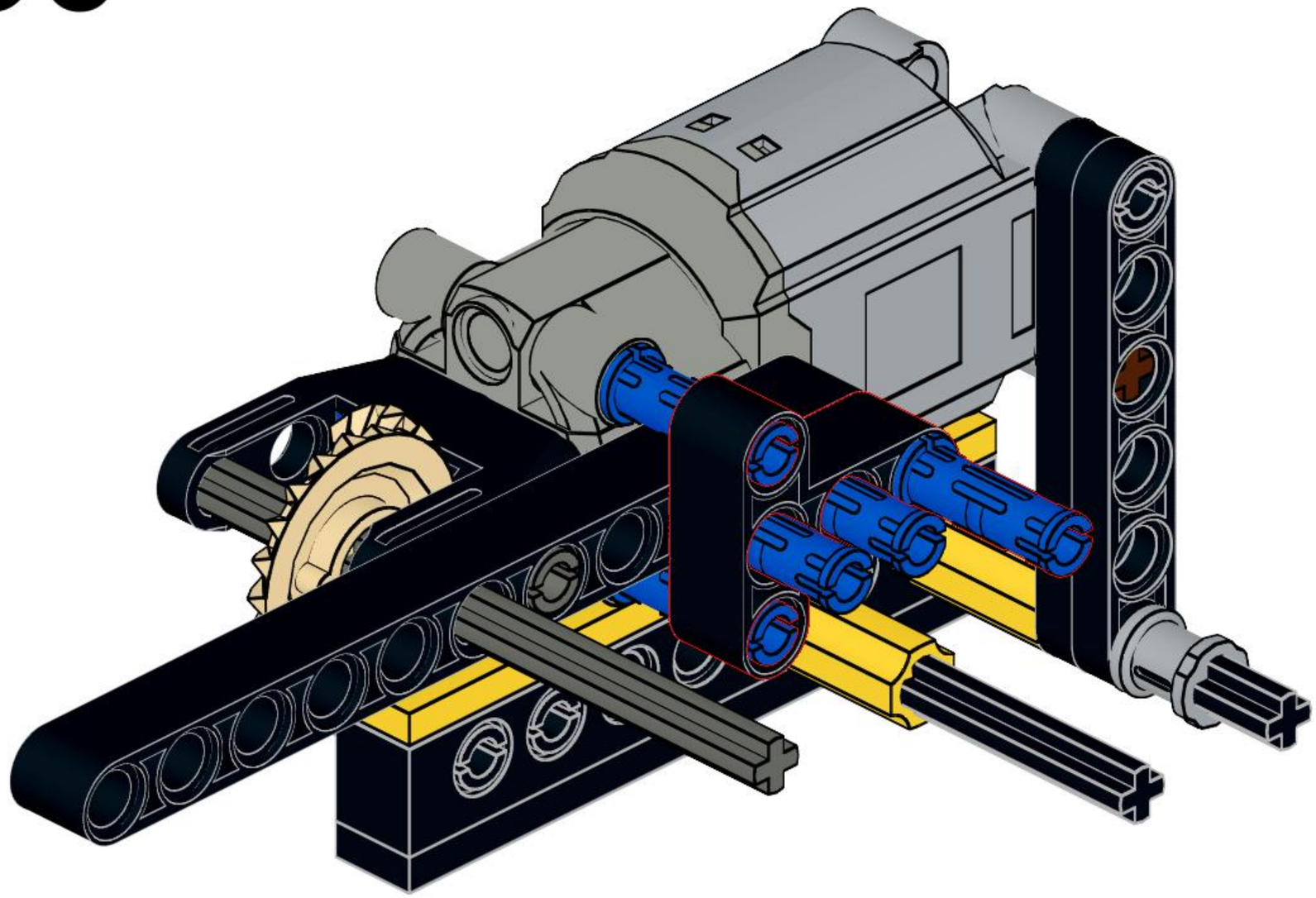

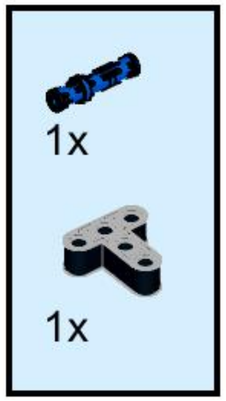

237

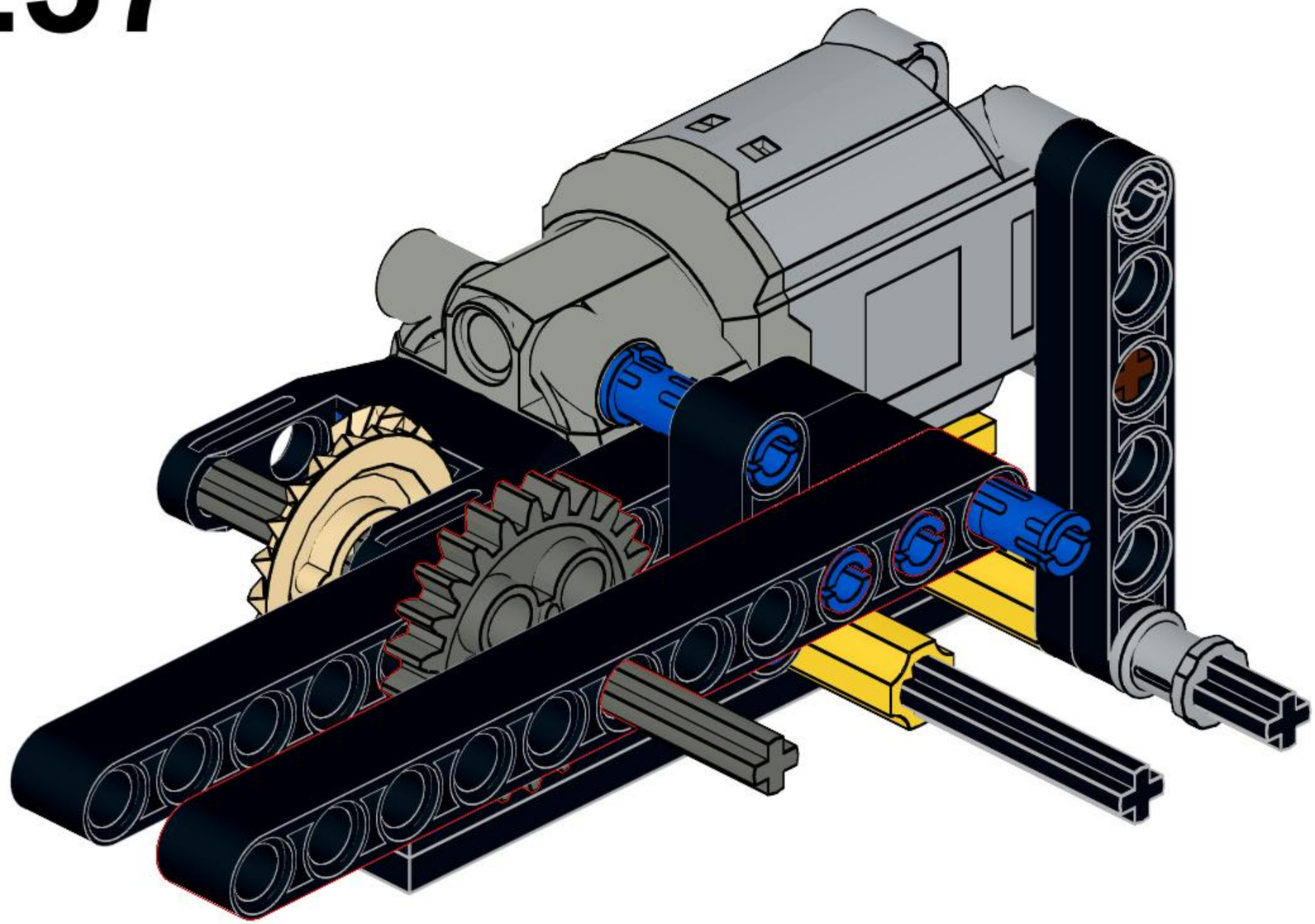

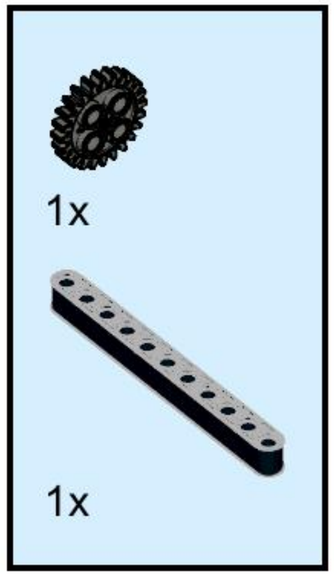

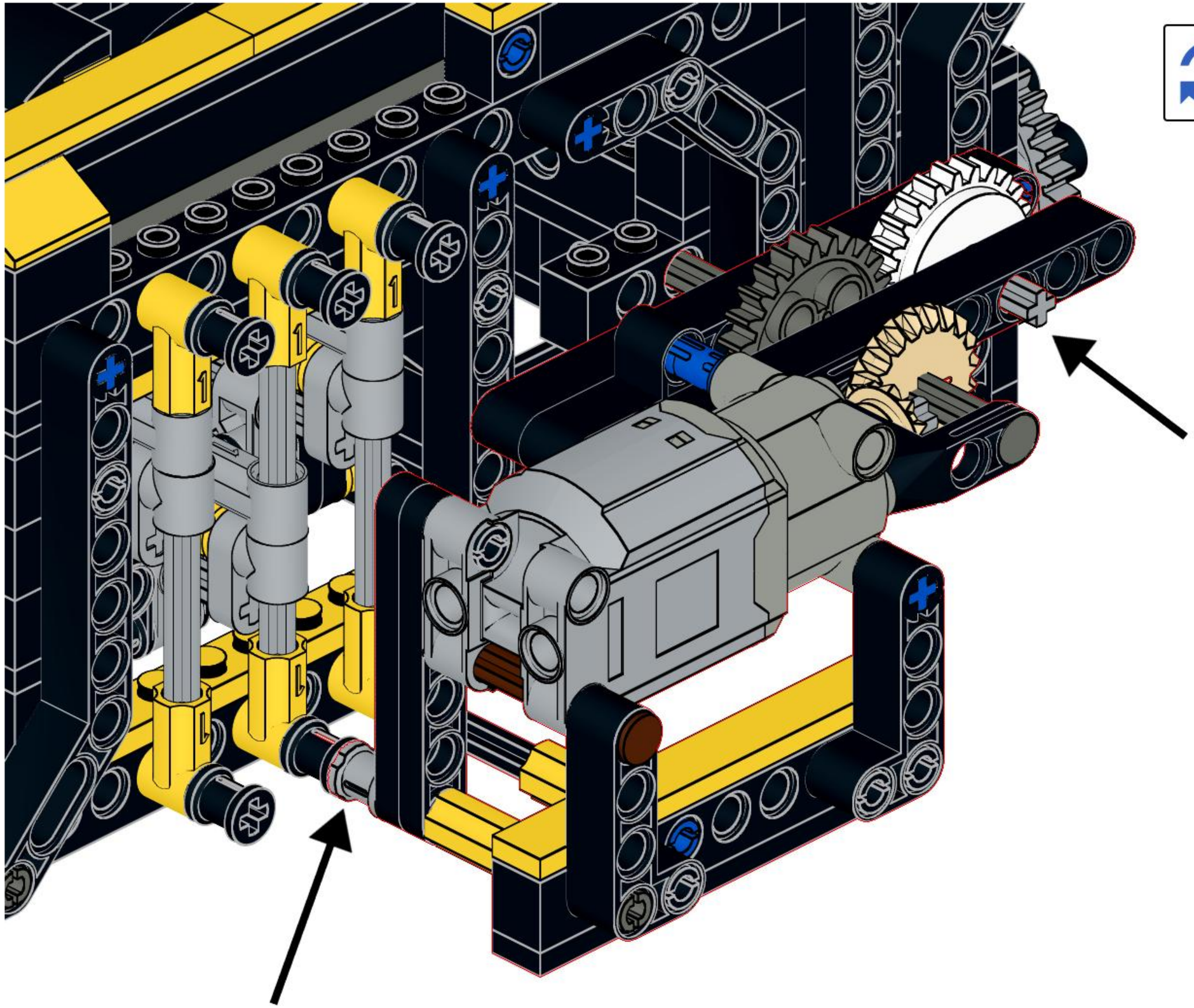

238

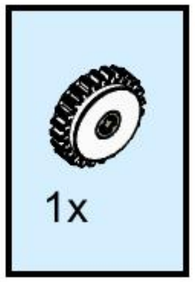

239

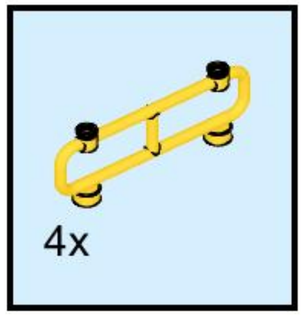

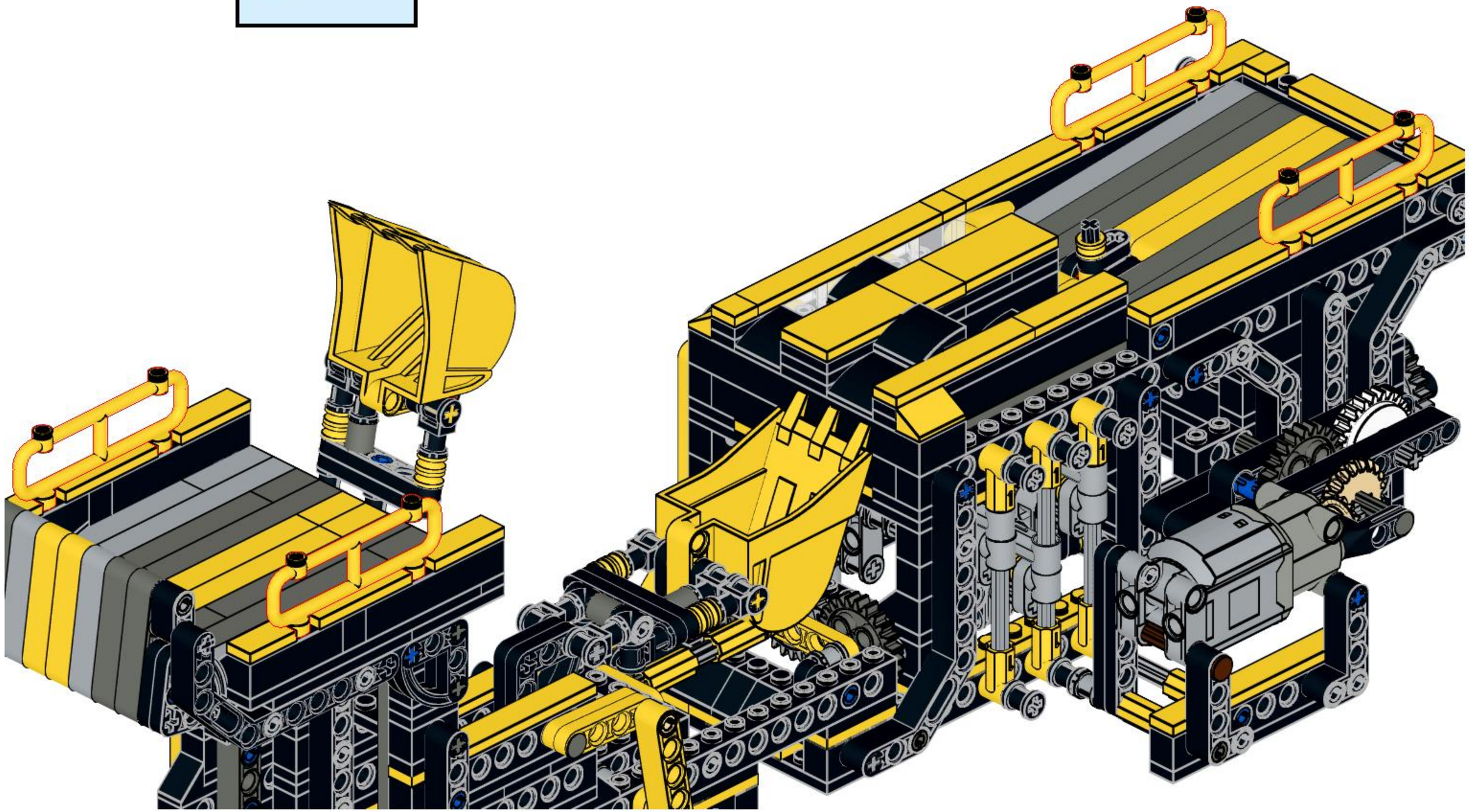

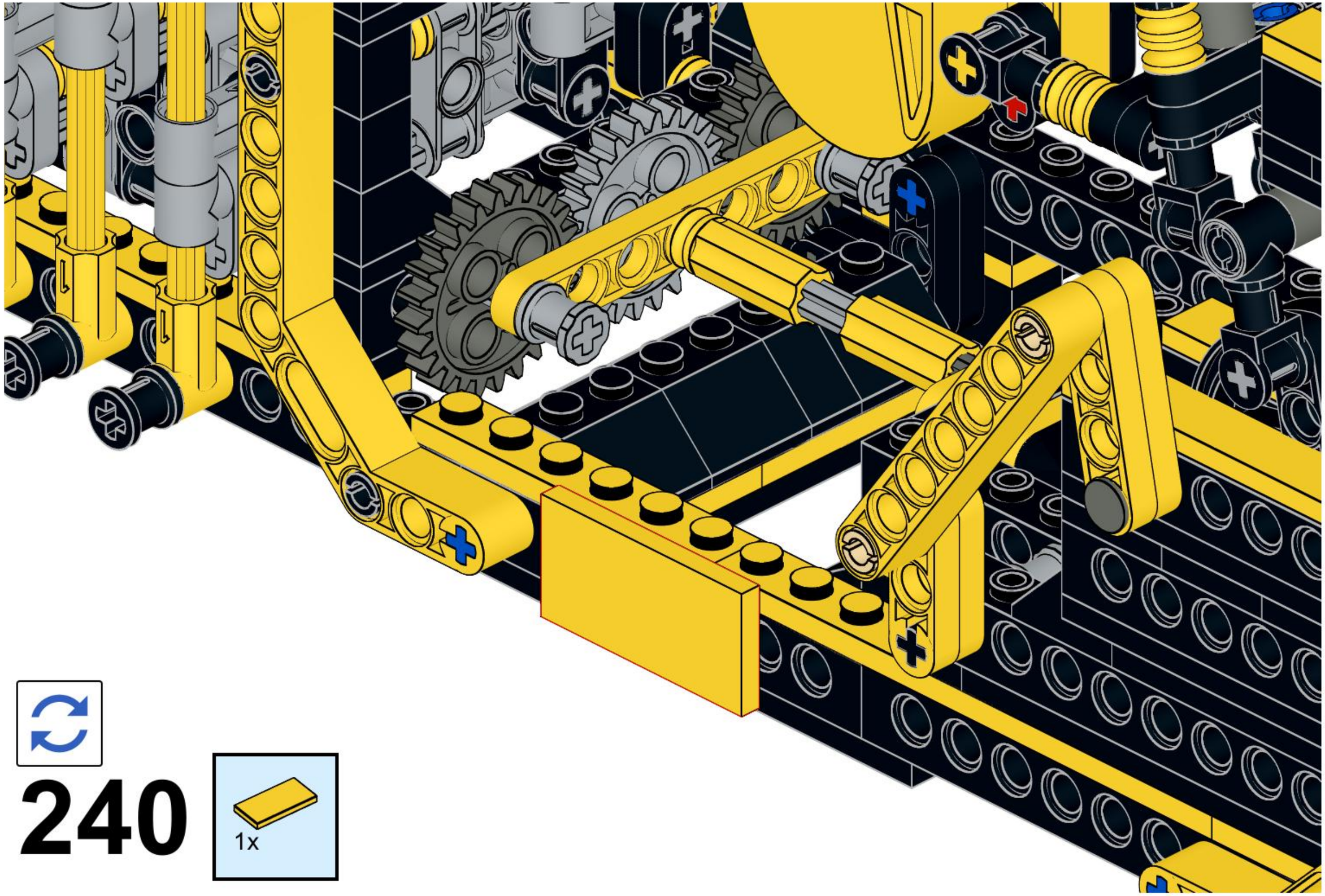

240

241

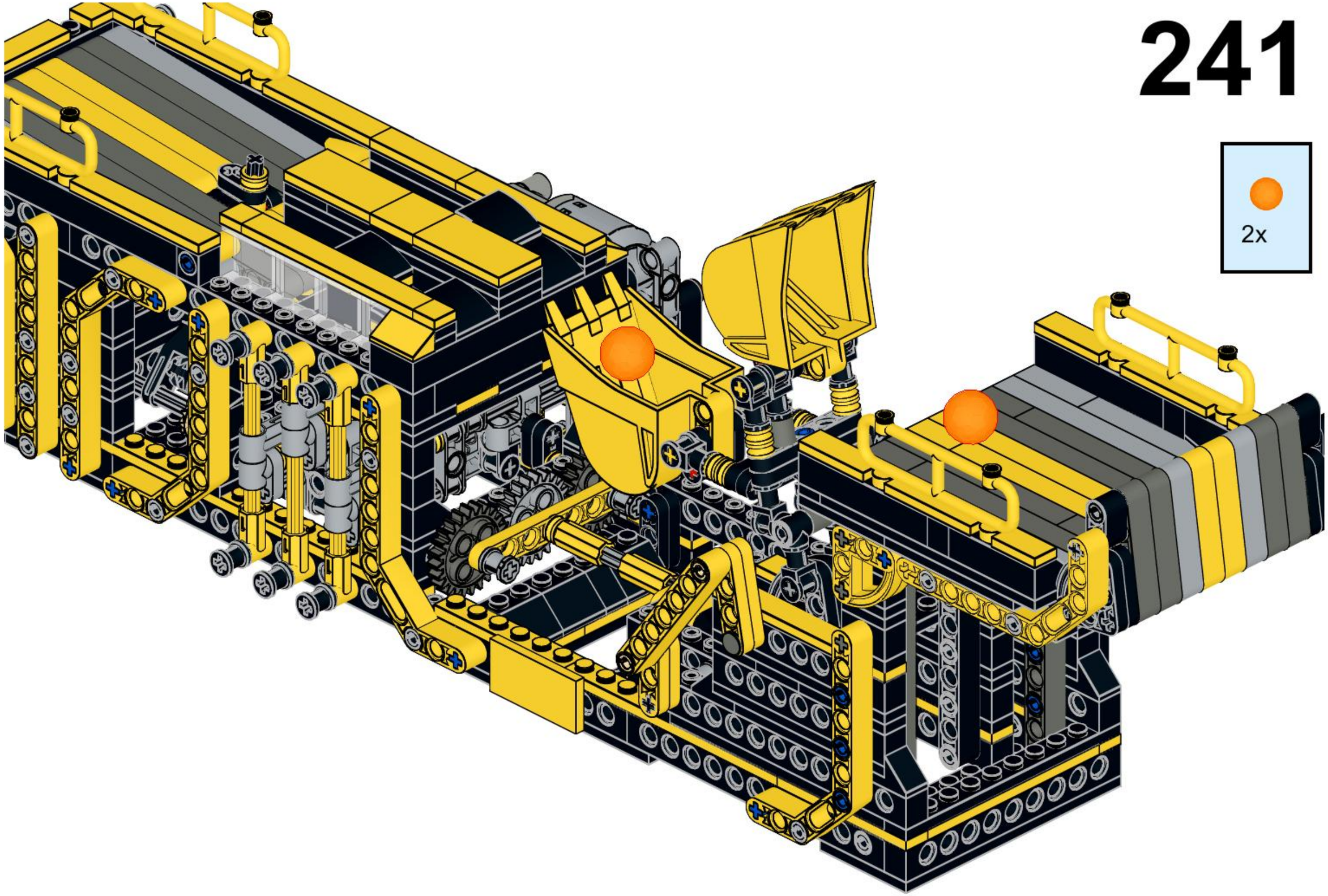

Module Revision Notes

Version 1.0 - Initial Release. March 2019

11x
3024, 11

14x
32039, 11

9x
3700, 11

4x
10197, 11

8x
3003, 11

4x
3623, 11

8x
3705, 11

4x
3701, 11

3x
3005, 11

3x
85984, 11

5x
3040, 11

6x
3022, 11

2x
63864, 11

4x
3021, 11

1x
60484, 11

2x
32140, 11

2x
6541, 11

2x
60483, 11

3x
32270, 11

2x
6632, 11

2x
2357, 11

7x
3710, 11

3x
87408, 11

1x
3020, 11

4x
32062, 11

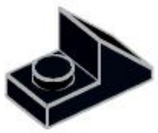
4x
92946, 11

2x
32000, 11

6x
6558, 11

4x
32184, 11

8x
32249, 11

15x
41677, 11

4x
3665, 11

8x
15068, 11

3x
3039, 11

15x
32054, 11

2x
32056, 11

4x
3010, 11

1x
43721, 11

28x
3023, 11

2x
3004, 11

1x
43720, 11

2x
32063, 11

2x
3009, 11

9x
3460, 11

4x
11478, 11

2x
3706, 11

2x
3795, 11

1x
4162, 11

2x
99773, 11

8x
3666, 11

4x
32524, 11

2x
3008, 11

1x
32526, 11

10x
3894, 11

1x
40344, 11

9x
3702, 11

2x
3034, 11

2x
3737, 11

3x
6111, 11

3x
3007, 11

12x
4477, 11

5x
3832, 11

2x
40490, 11

7x
2730, 11

6x
32009, 11

1x
3006, 11

1x
3708, 11

4x
3030, 11

6x
3895, 11

2x
32525, 11

1x
3029, 11

1x
3028, 11

1x
32018, 11

5x
3703, 11

5x
18654, 85

1x
32002, 85

1x
10928, 85

4x
3069b, 85

6x
90258, 85

12x
11214, 85

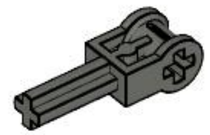

6x
6553, 85

5x
87083, 85

3x
3648, 85

4x
32316, 85

1x
32209, 85

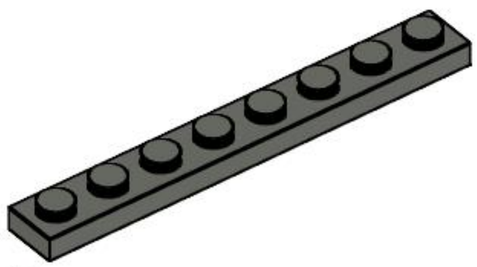

1x
3460, 85

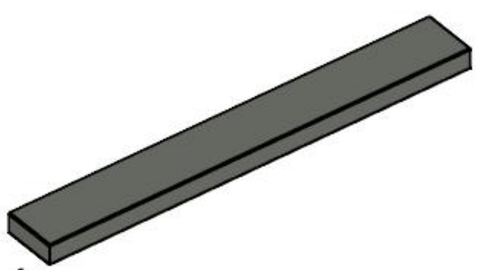

4x
4162, 85

1x
55013, 85

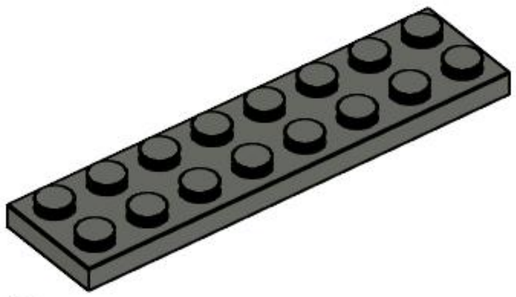

1x
3034, 85

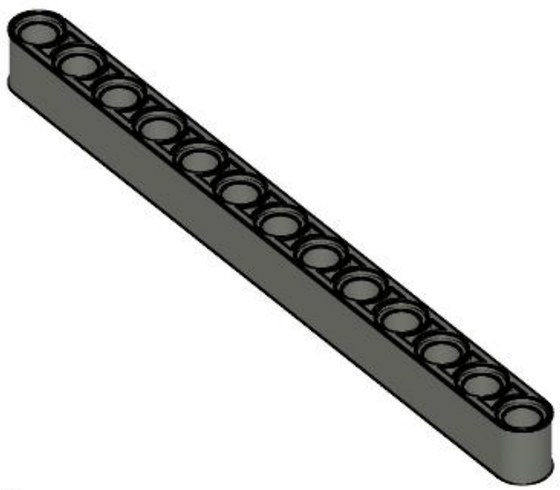

2x
41239, 85

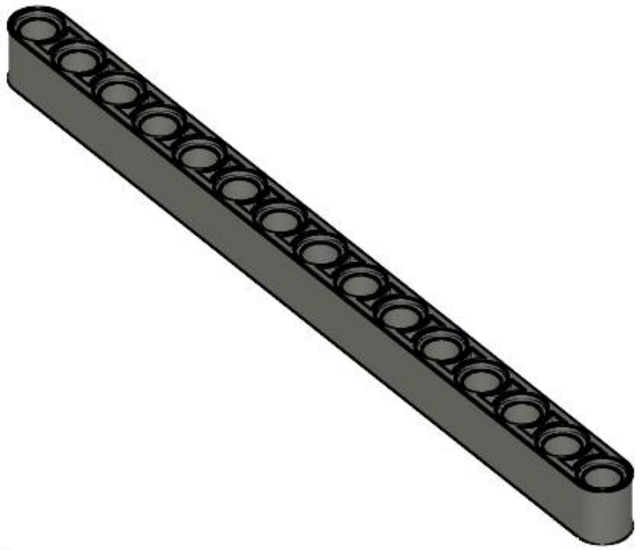

4x
32278, 85

1x
62519, 86

9x
3713, 86

14x
41677, 86

2x
62520, 86

2x
3069b, 86

2x
3673, 86

6x
32013, 86

6x
22961, 86

6x
44809, 86

15x
4519, 86

4x
32184, 86

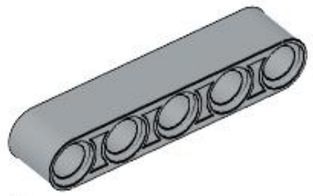

2x
32316, 86

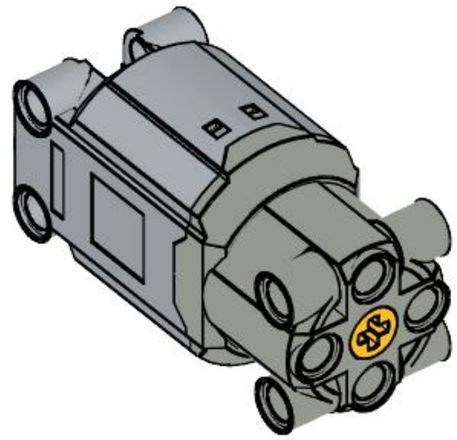

1x
99499c01, 86

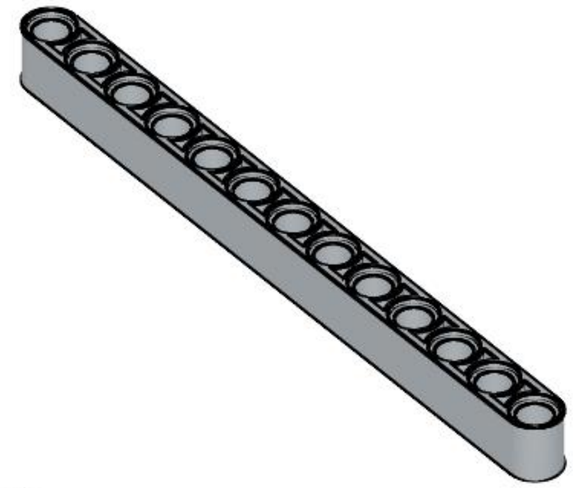

2x
41239, 86

2x
x45, 4

2x
94925, 86

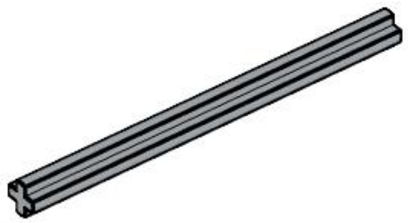

3x
44294, 86

4x
3749, 2

4x
6589, 2

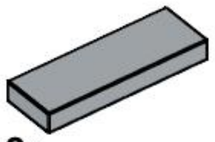

2x
63864, 86

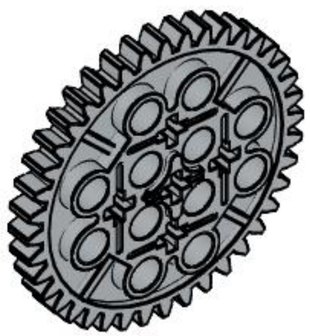

2x
3649, 86

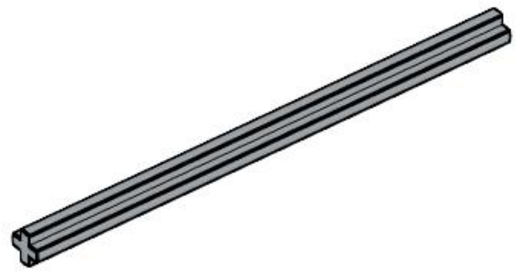

1x
60485, 86

1x
60c01, 1

1x
32198, 2

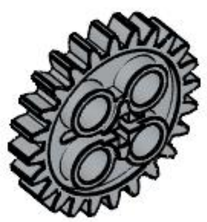

1x
3648, 86

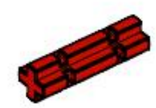

4x
32062, 5

36x
4265c, 3

12x
32073, 86

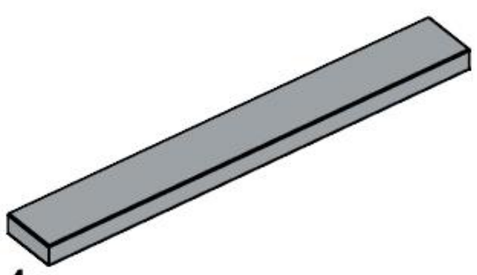

4x
4162, 86

2x
15462, 88

4x
3070b, 3

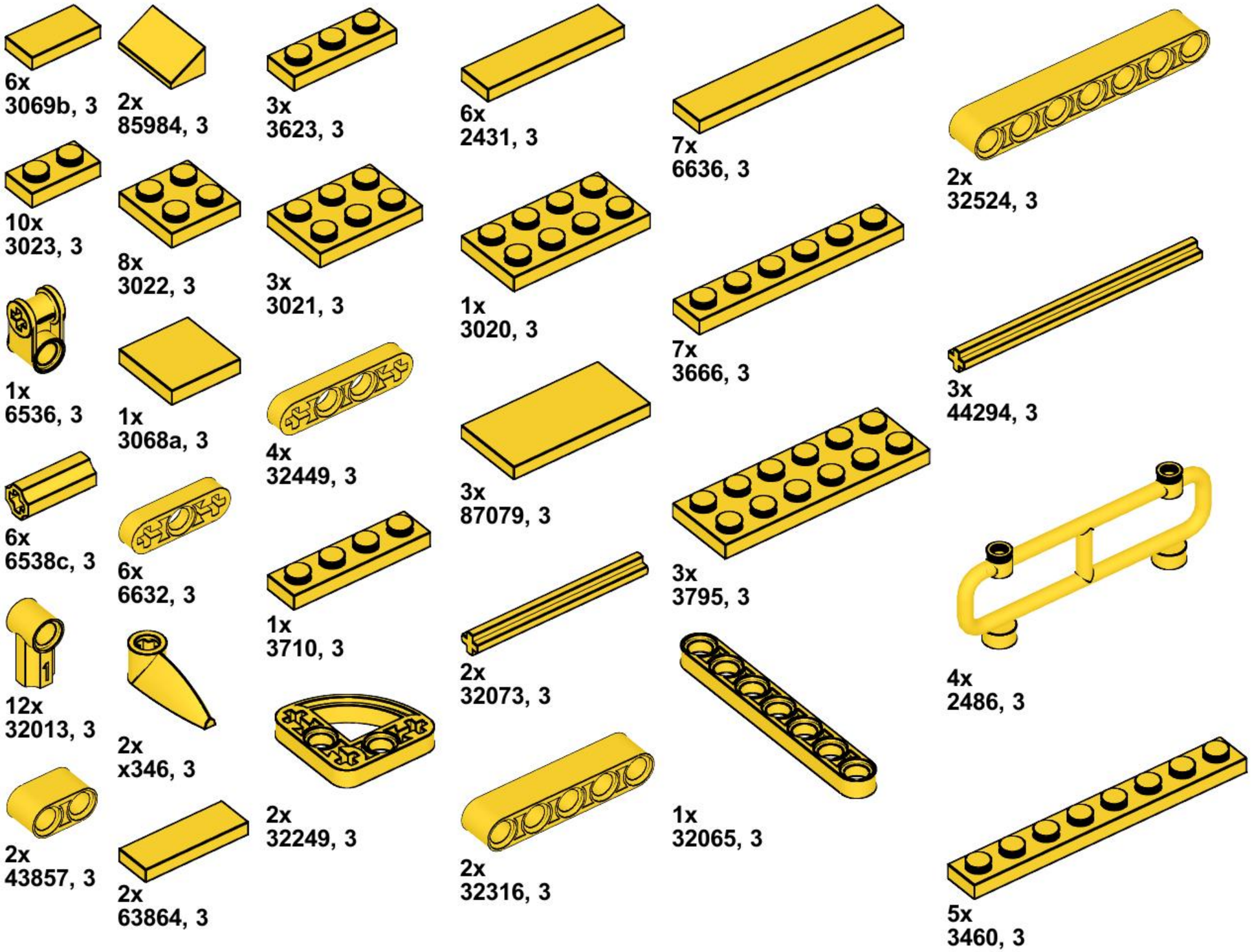
6x
3069b, 3
2x
85984, 3
3x
3623, 3
6x
2431, 3
7x
6636, 3
2x
32524, 3
10x
3023, 3
8x
3022, 3
3x
3021, 3
1x
3020, 3
7x
3666, 3
3x
44294, 3
1x
6536, 3
1x
3068a, 3
4x
32449, 3
3x
87079, 3
6x
6538c, 3
6x
6632, 3
1x
3710, 3
3x
3795, 3
4x
2486, 3
12x
32013, 3
2x
x346, 3
2x
32073, 3
2x
32249, 3
1x
32065, 3
2x
43857, 3
2x
63864, 3
2x
32316, 3
5x
3460, 3

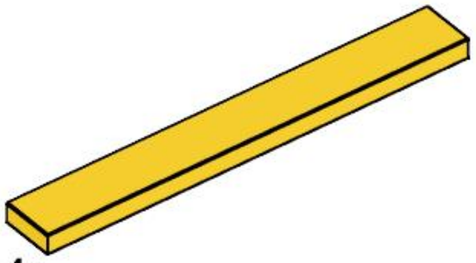

4x
4162, 3

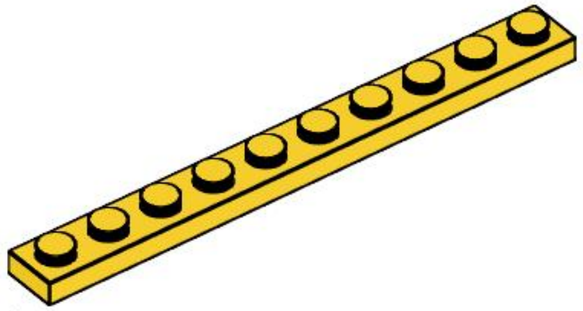

3x
4477, 3

22x
6558, 7

4x
87552, 12

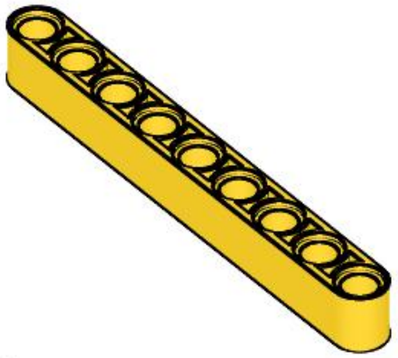

3x
40490, 3

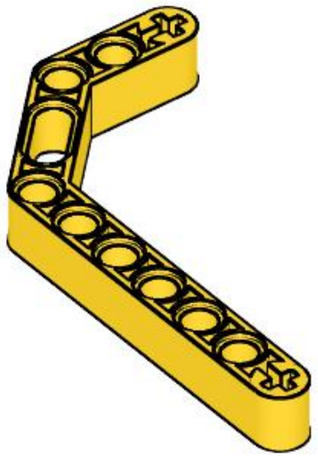

6x
32009, 3

3x
4274, 7

31x
43093, 7

2x
24120, 3