Version 1.1

# INDUSTRIAL BUCKET

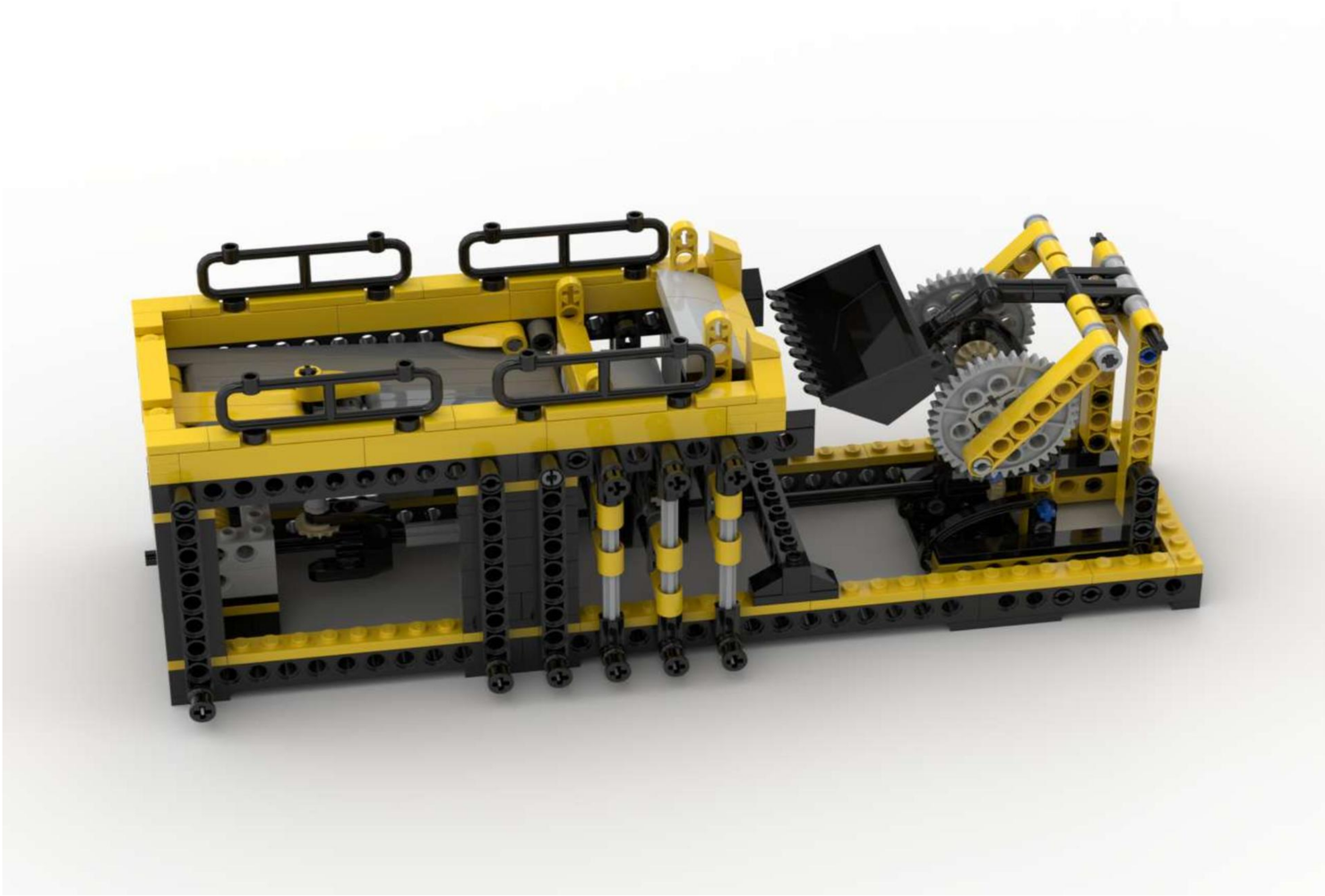

Copyright 2018 Ryk Field,
Attribution-NonCommercial 4.0 International (CC BY-NC 4.0)
https://creativecommons.org/licenses/by-nc/4.0/

REF01

The "Industrial Bucket" GBC is heavily influenced by the designs of two other GBC builders.

The input stepping mechanism is - i'm told - originally an Akiyuki design.

The bucket mechanism is derived from a Philippe "Philo" Hurbain design from 2005, known as the "Shovel."

Wanting to make a bucket GBC, but not having either the motor or shovel used in Philo's design, I built this new design to suit the parts I had available.

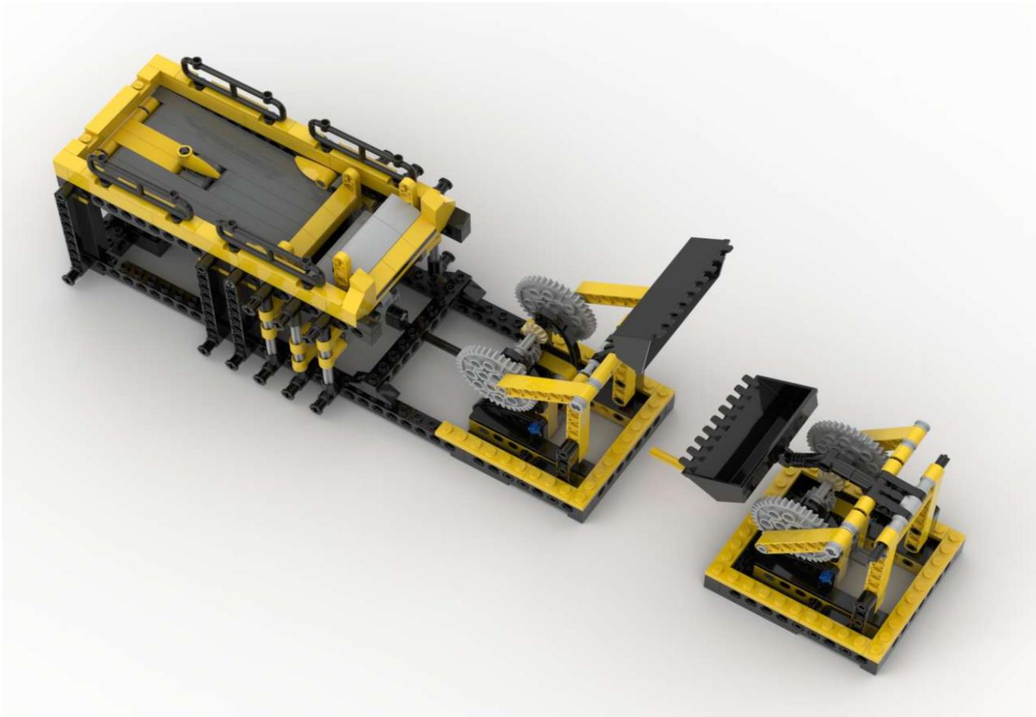

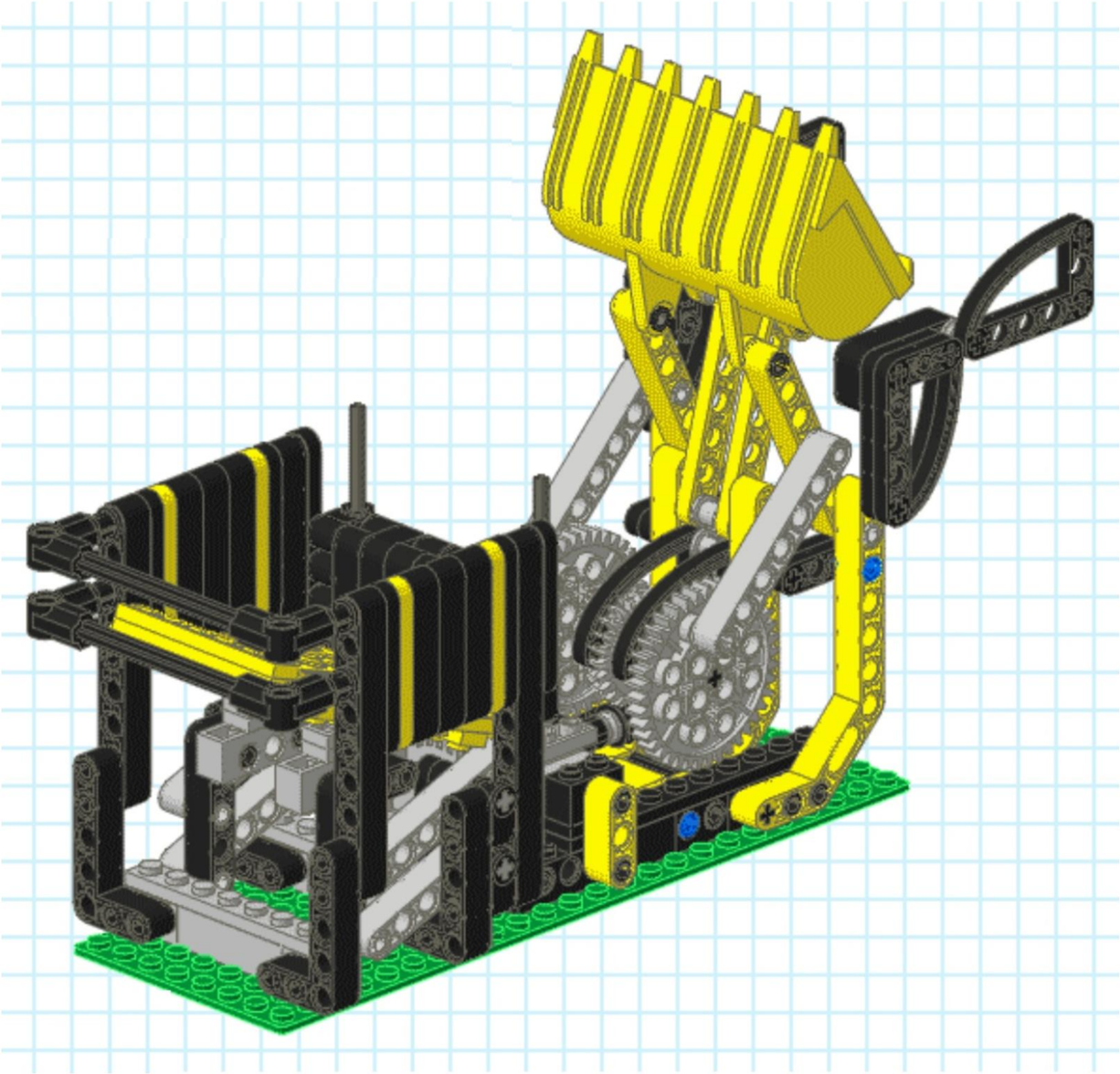

Philo "Shovel" (2005)

Design Notes

This GBC has been designed to operate as a stand-alone module, driven by an "M" motor.

The use of a central drive shaft enables the module to be configured and used with a few variations.  Additional "Extension Buckets" (shown previous page) can be attached to allow bucket-to-bucket passing of balls.

The "M" motor and drive assembly can be removed and replaced by an "XL" motor and drive assembly.  The XL motor provides sufficient power to drive multiple "Extension Buckets" or unpowered modules, all connected by axles.  In personal testing I have had one "XL" module comfortably driving four unpowered modules (two before, two after.)

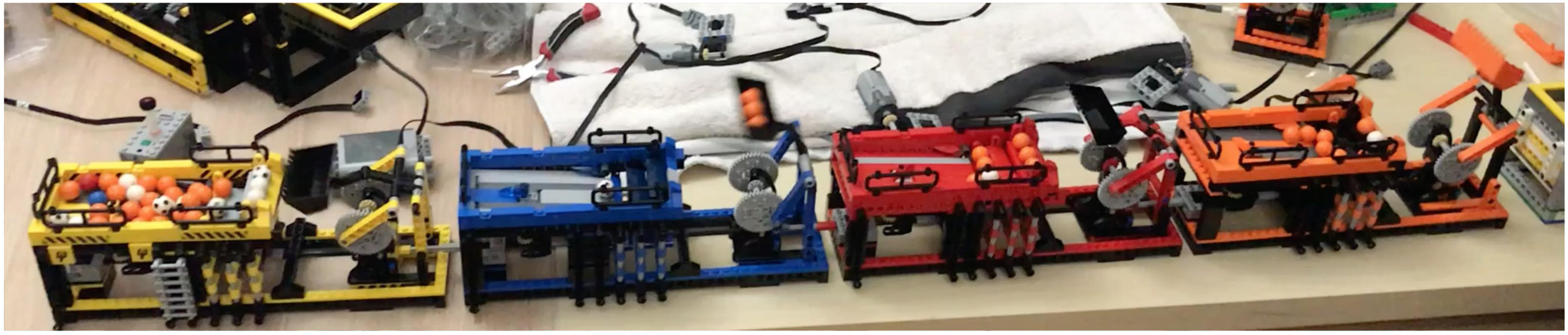

Three unpowered GBC modules (yellow, red, orange) being driven by the "XL" drive unit fitted to the blue GBC module.

# 1

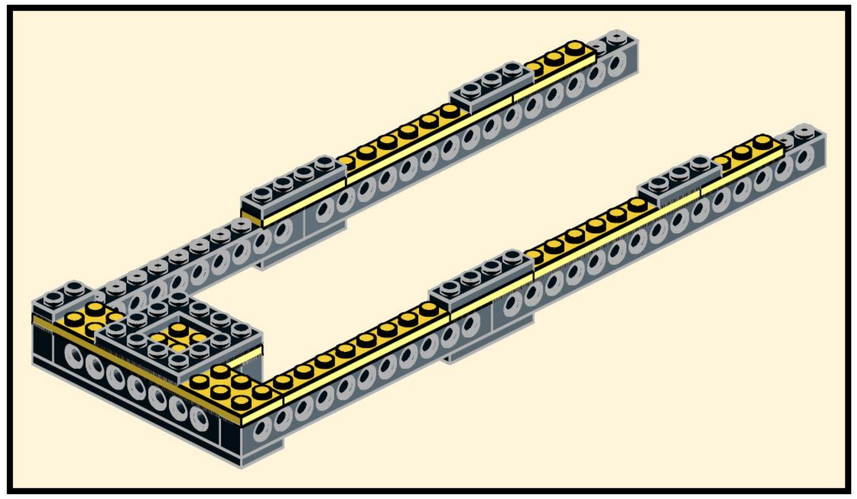

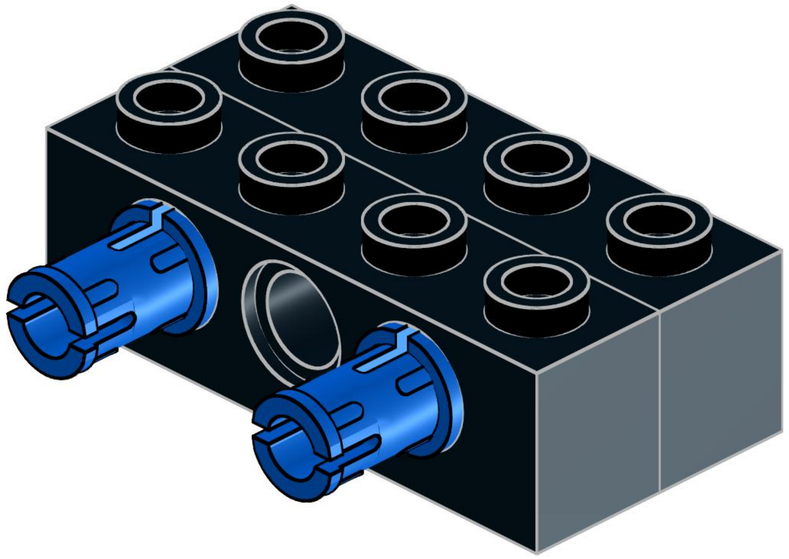

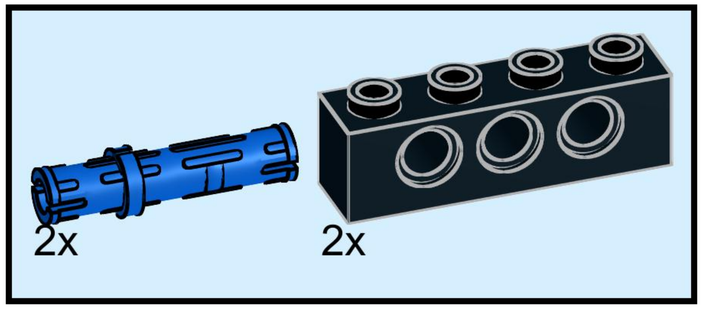

# 2

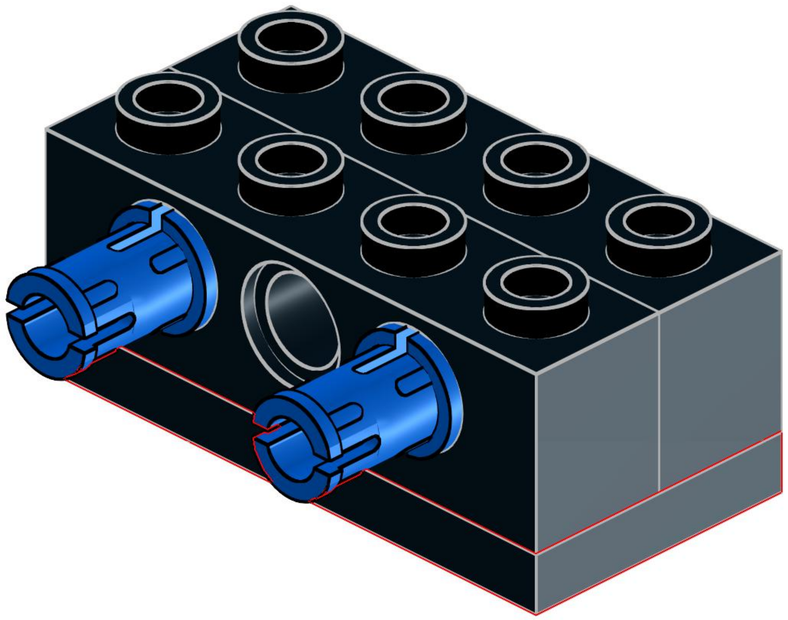

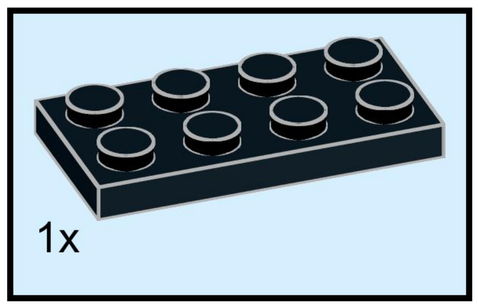

# 3

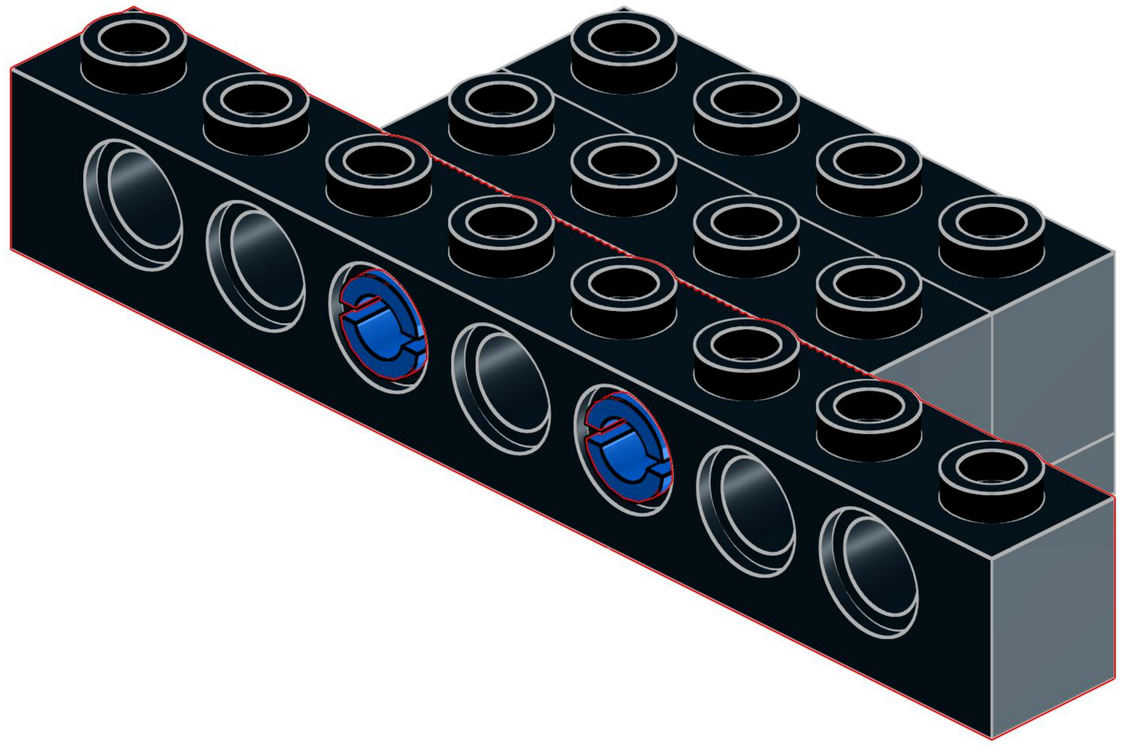

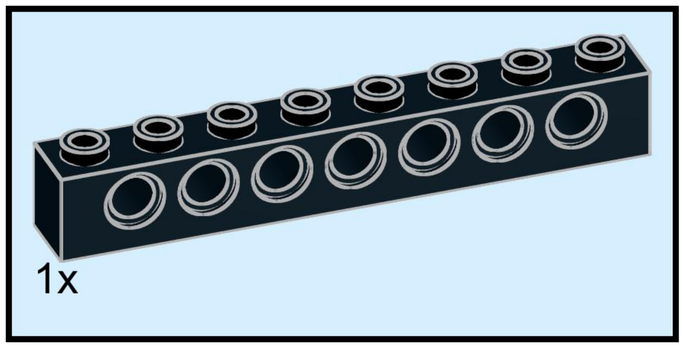

# 4

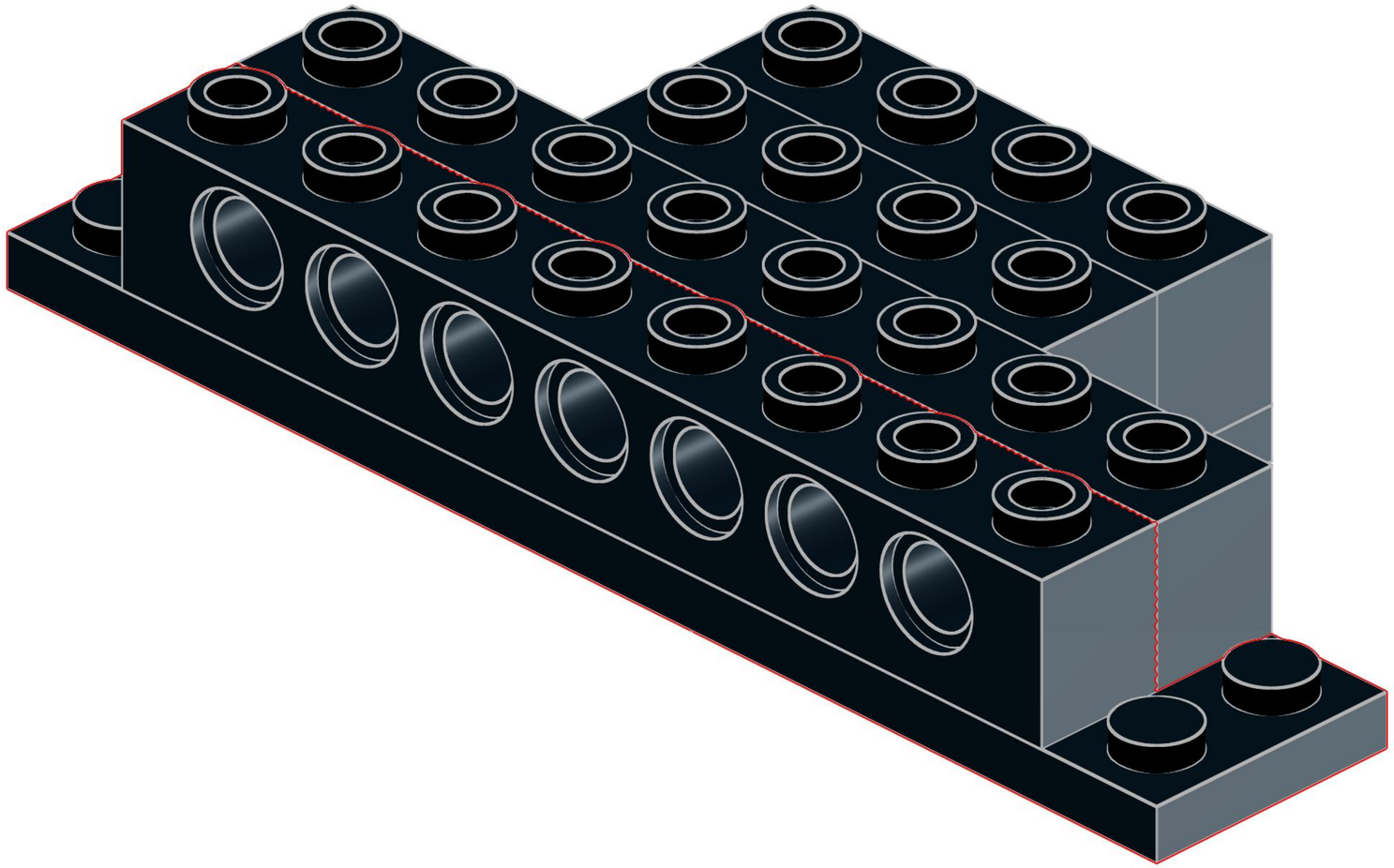

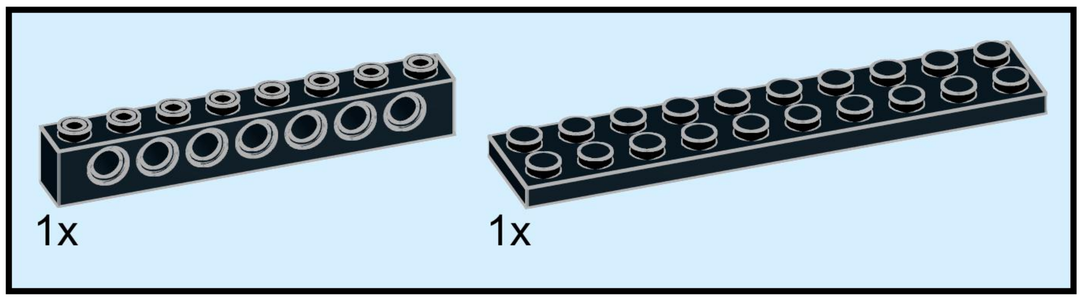

# 5

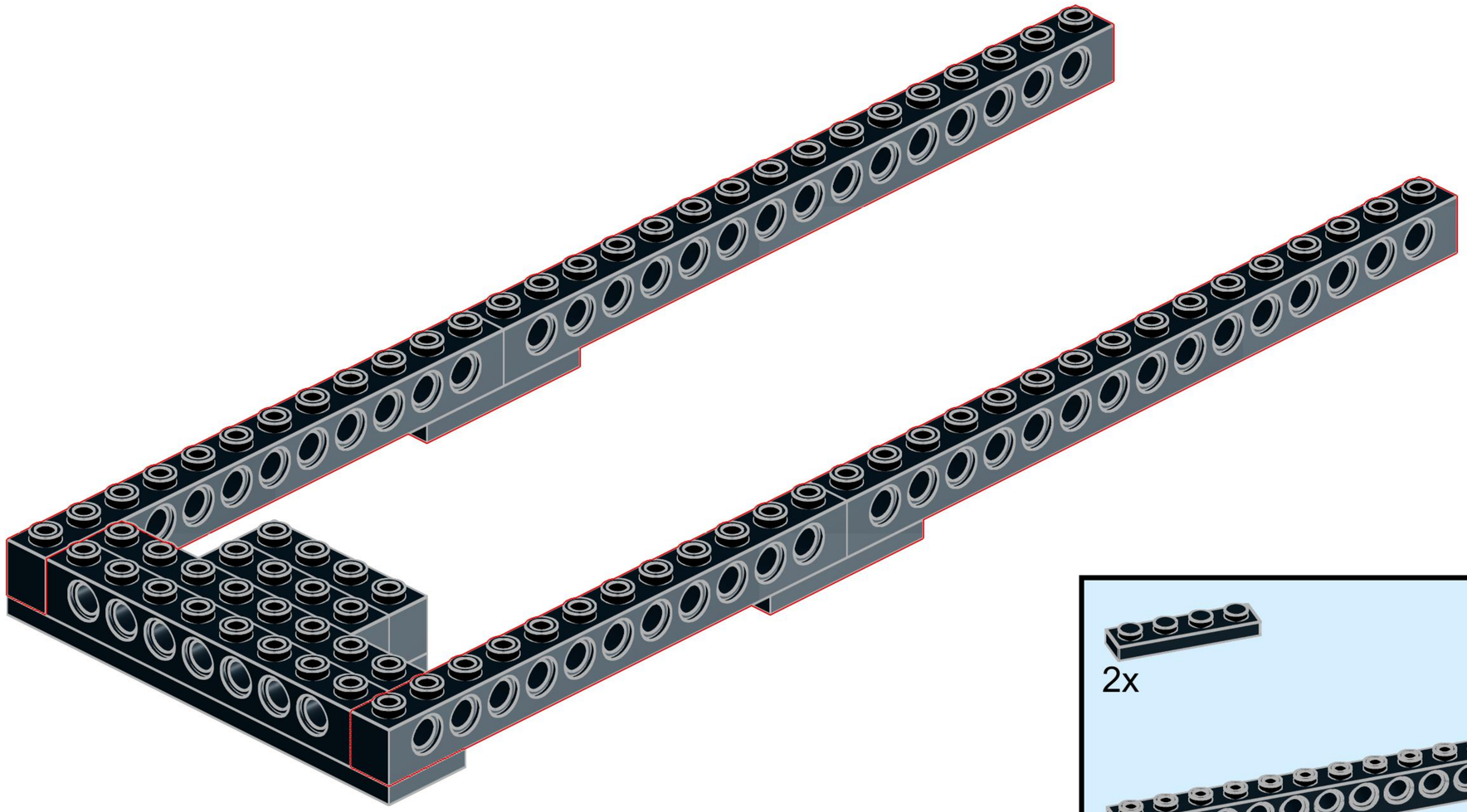

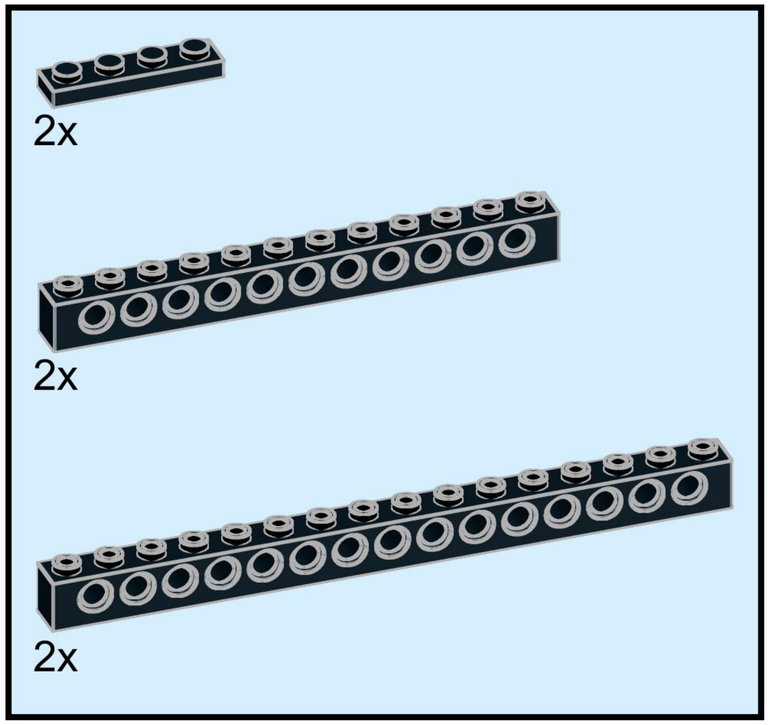

# 6

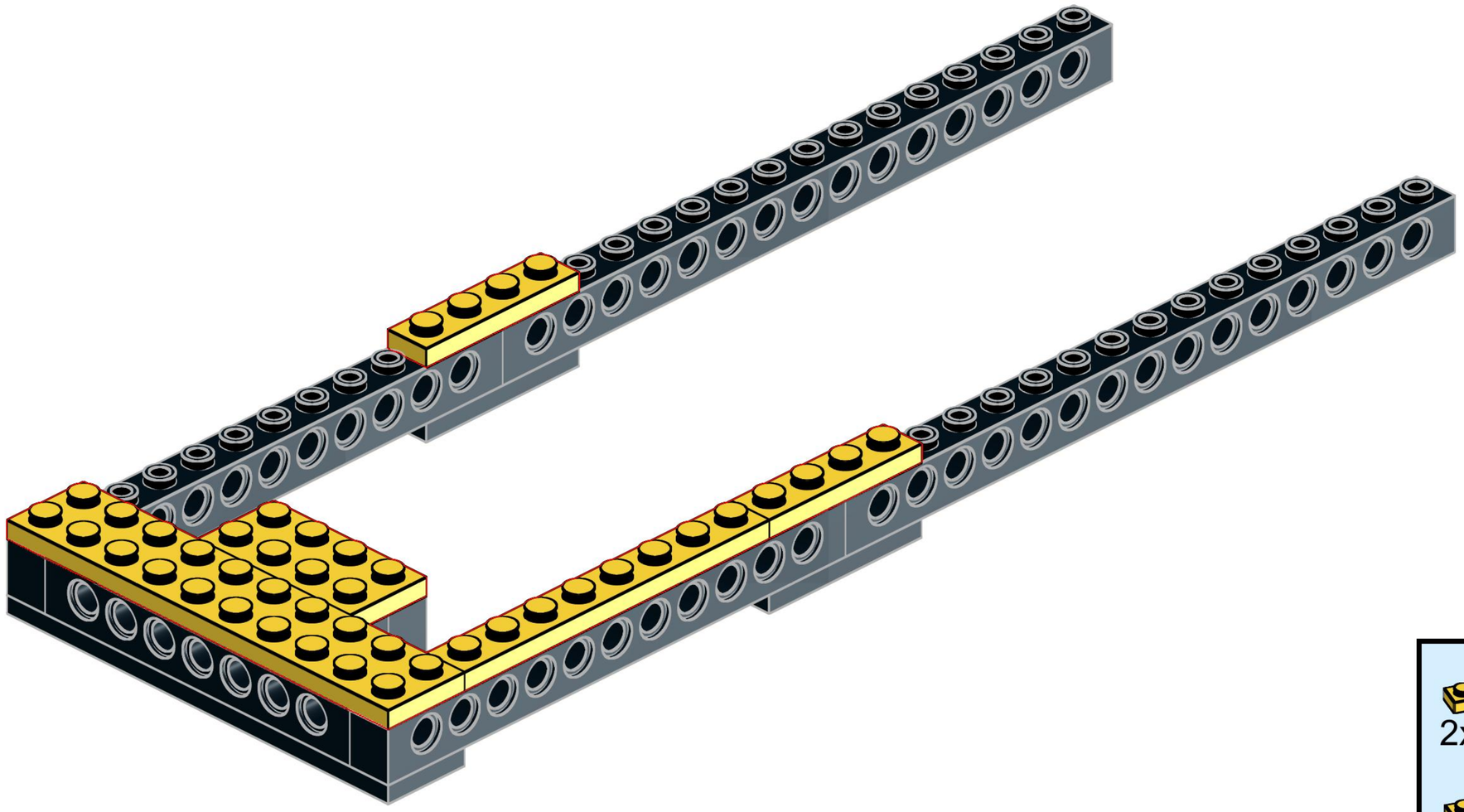

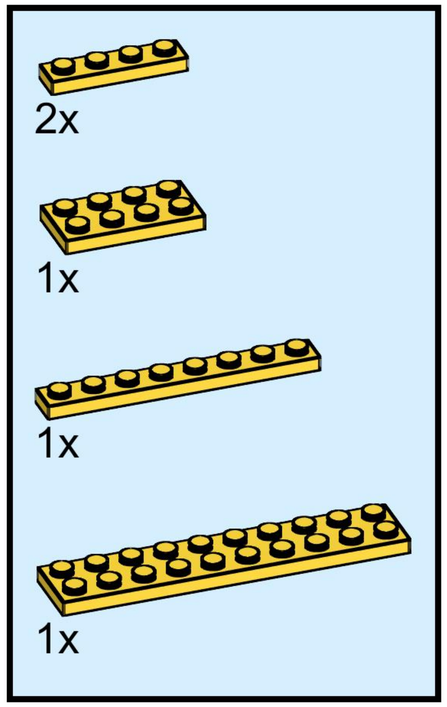

# 7

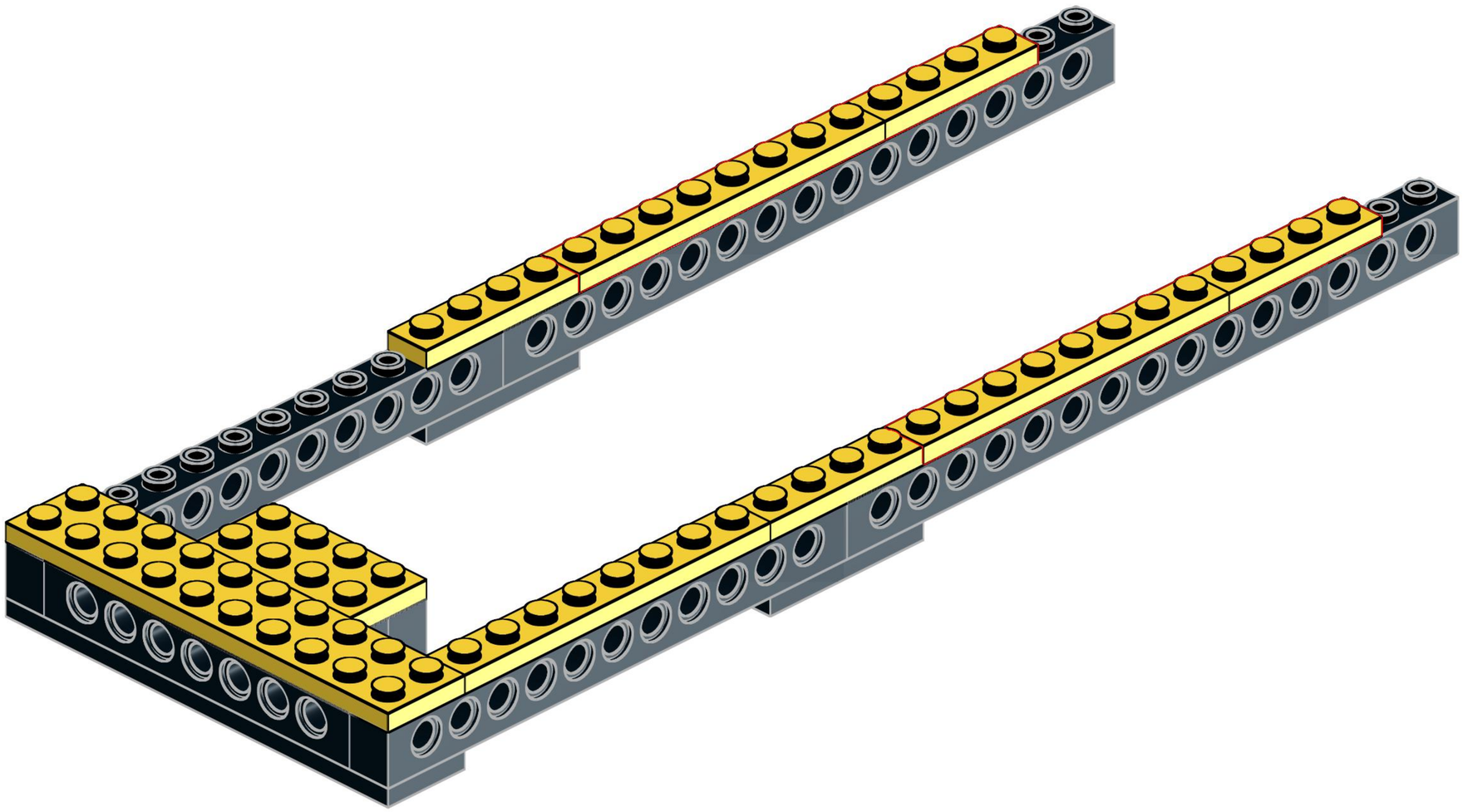

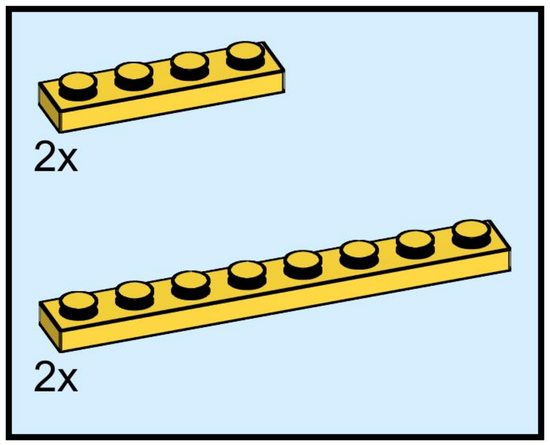

# 8

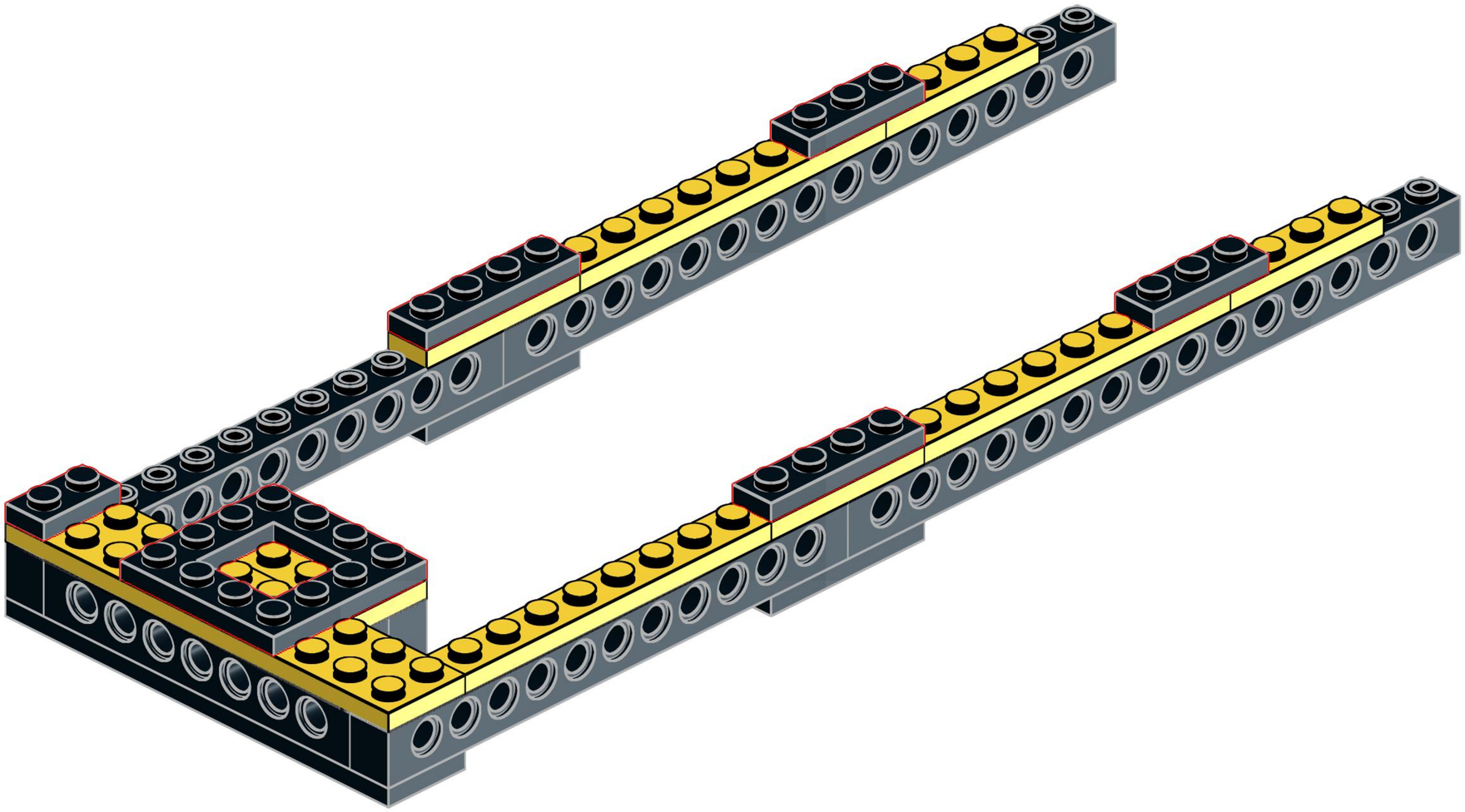

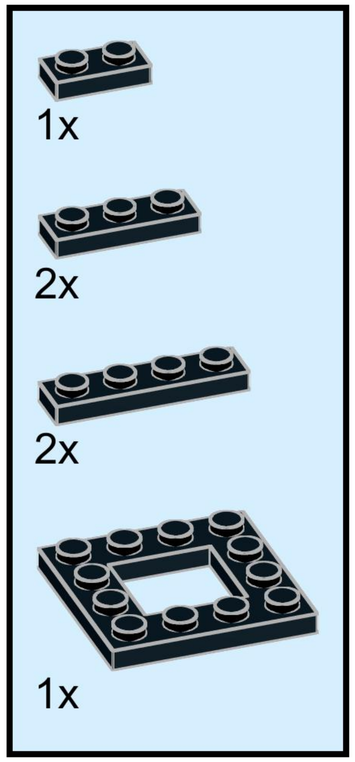

# 9

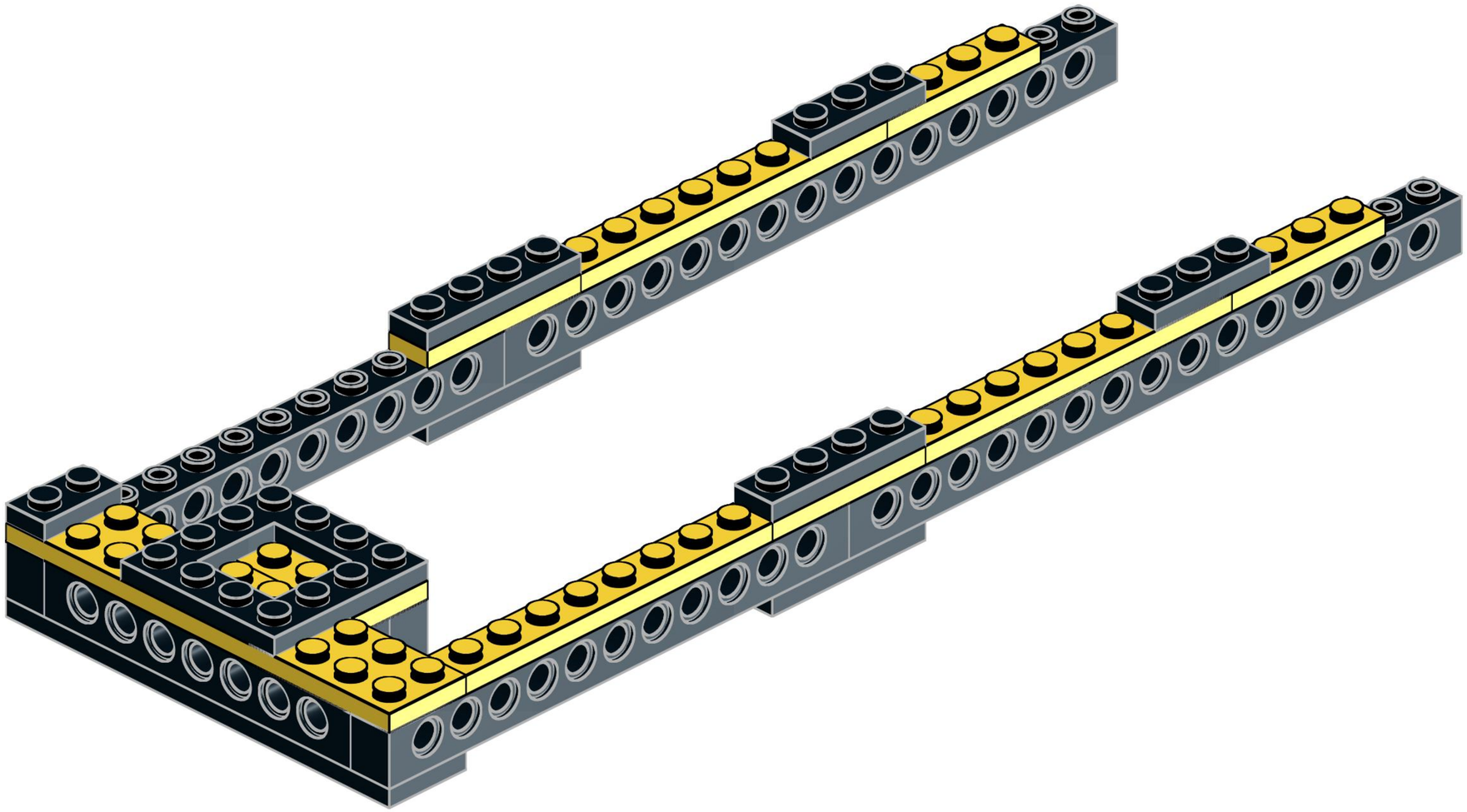

# 10

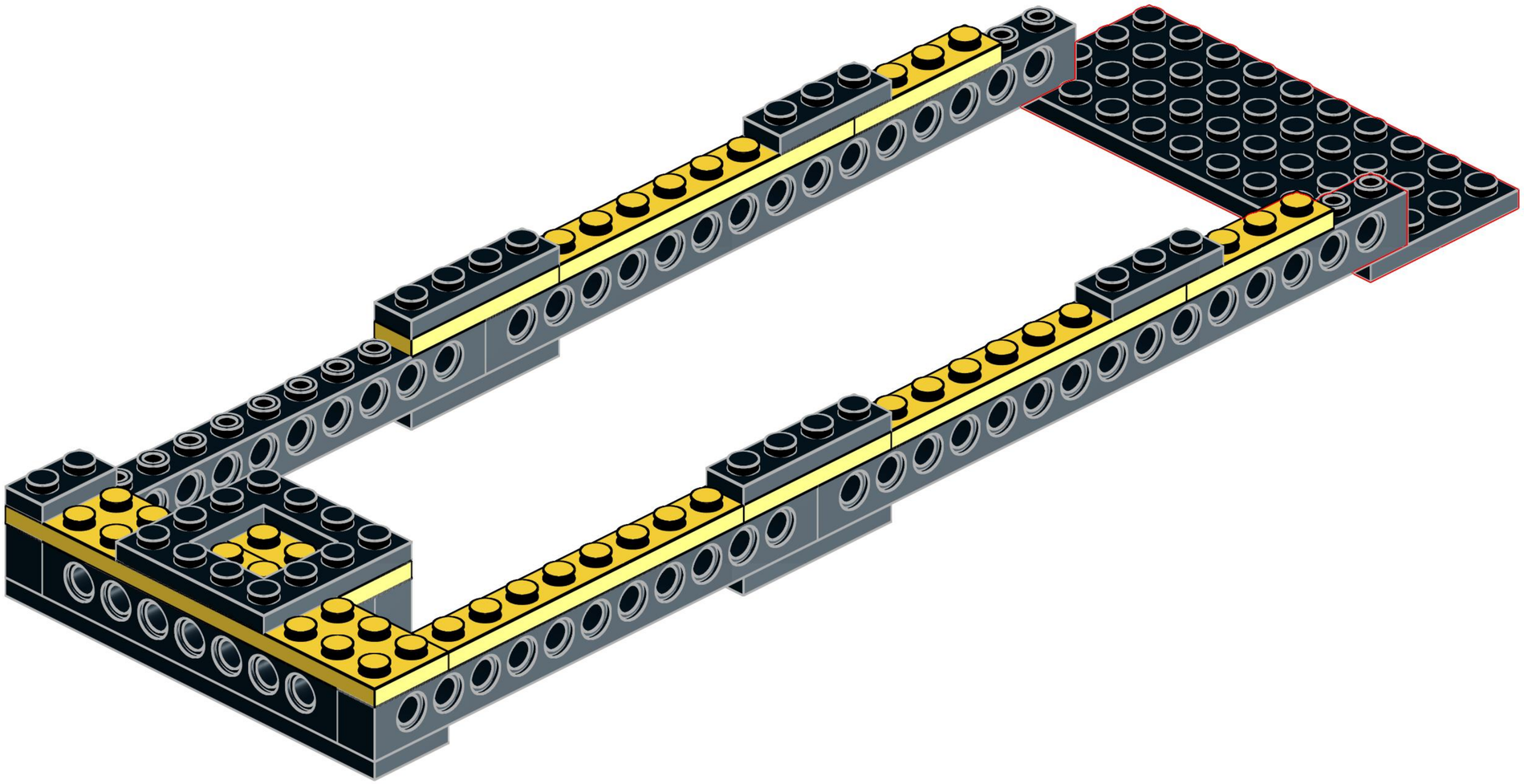

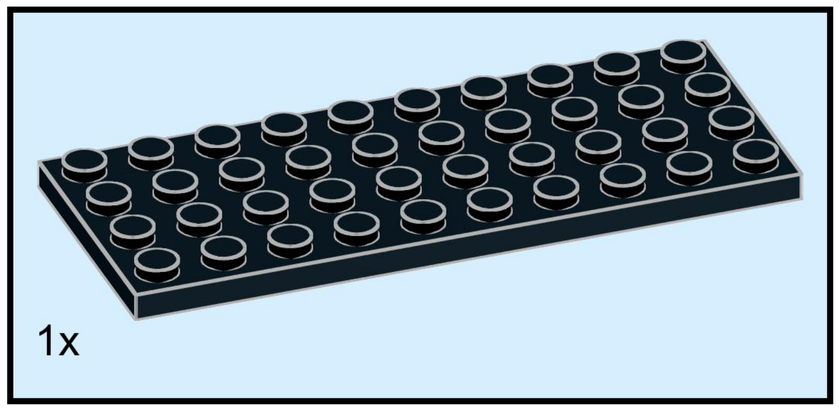

# 11

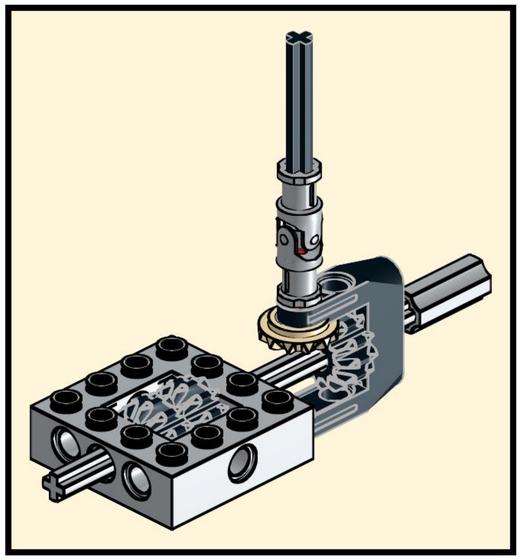

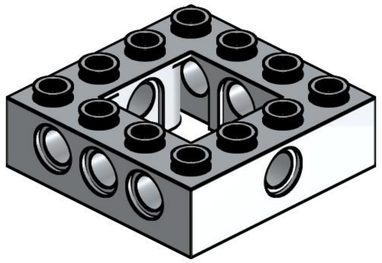

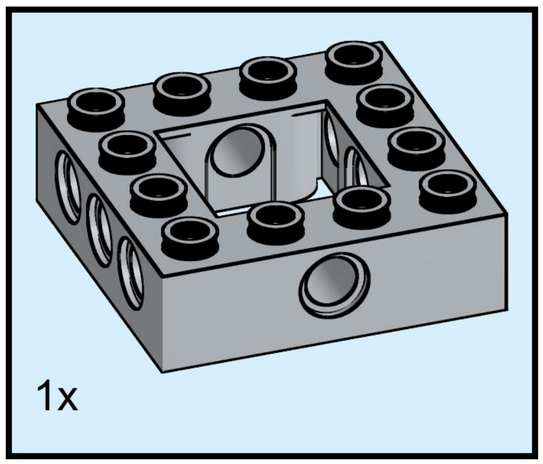

# 12

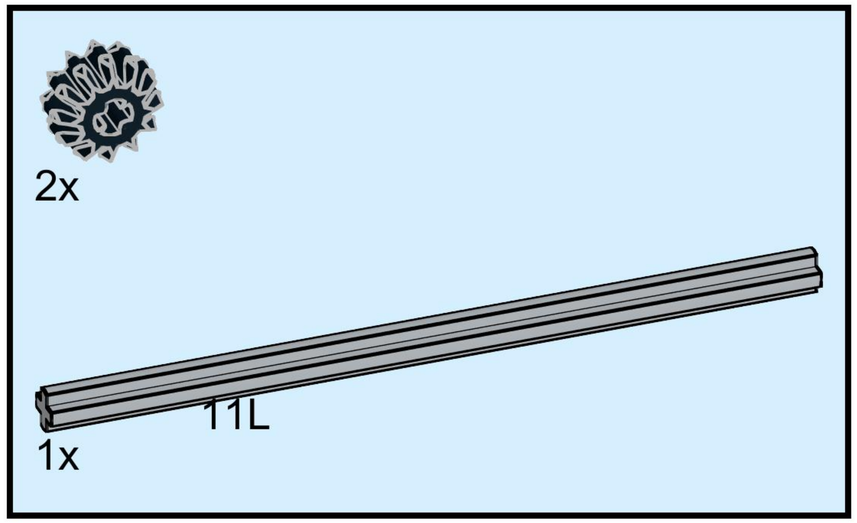


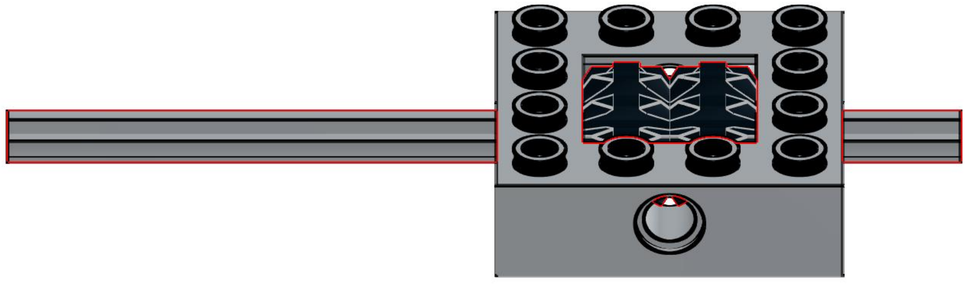

Axle should protrude by 1L to 1.5L
for (optional) connection to
additional modules.

# 13

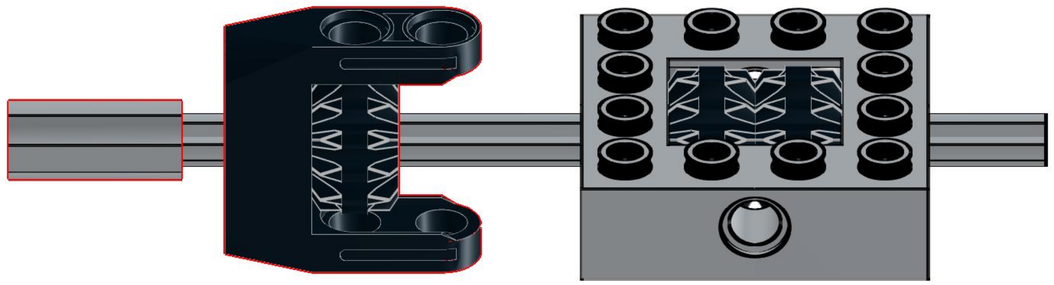

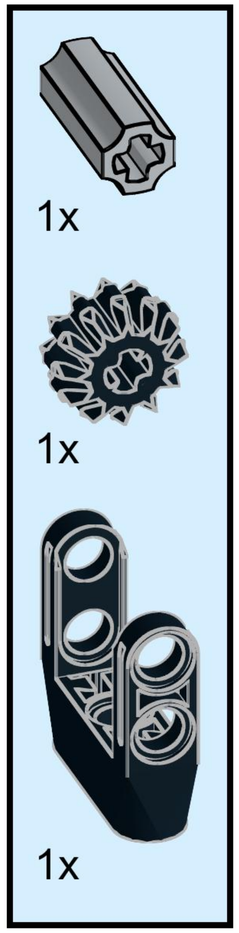

# 14

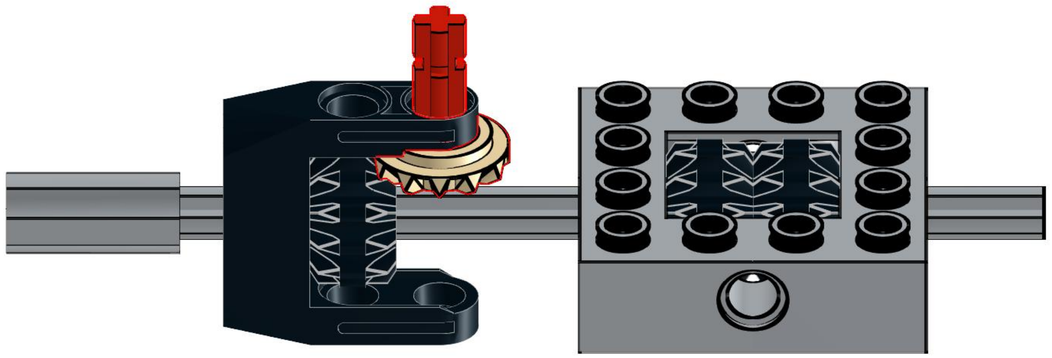

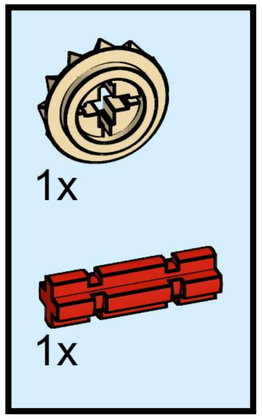

# 15

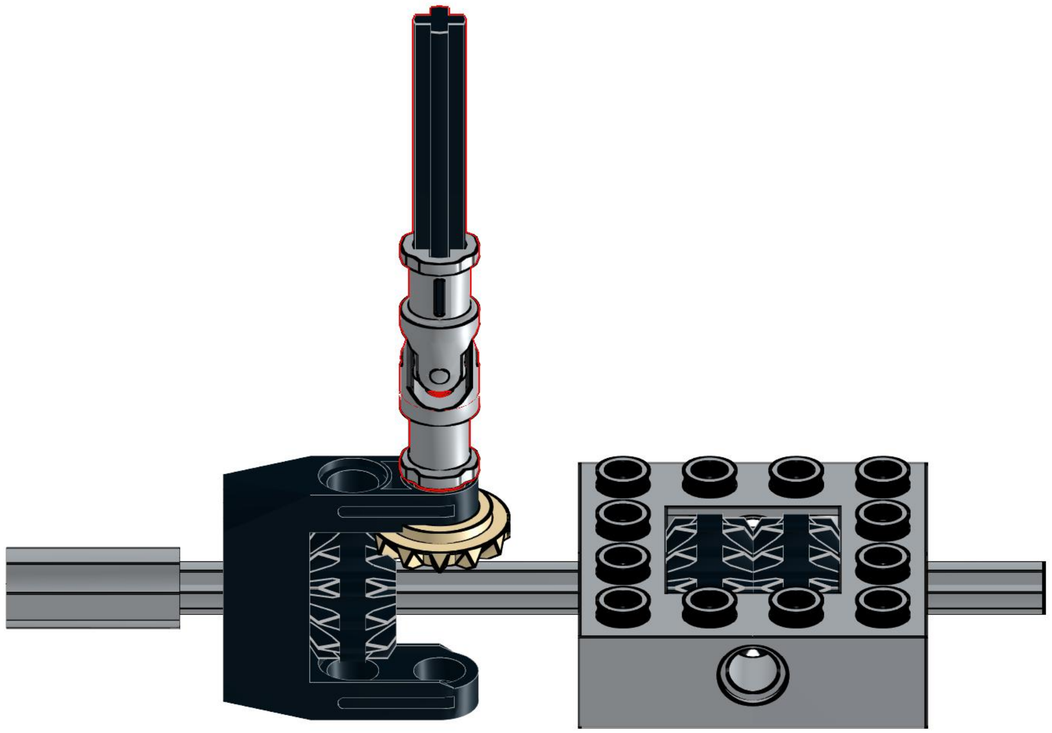

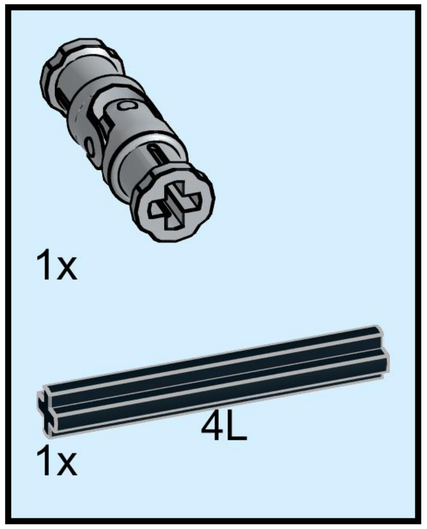

# 16

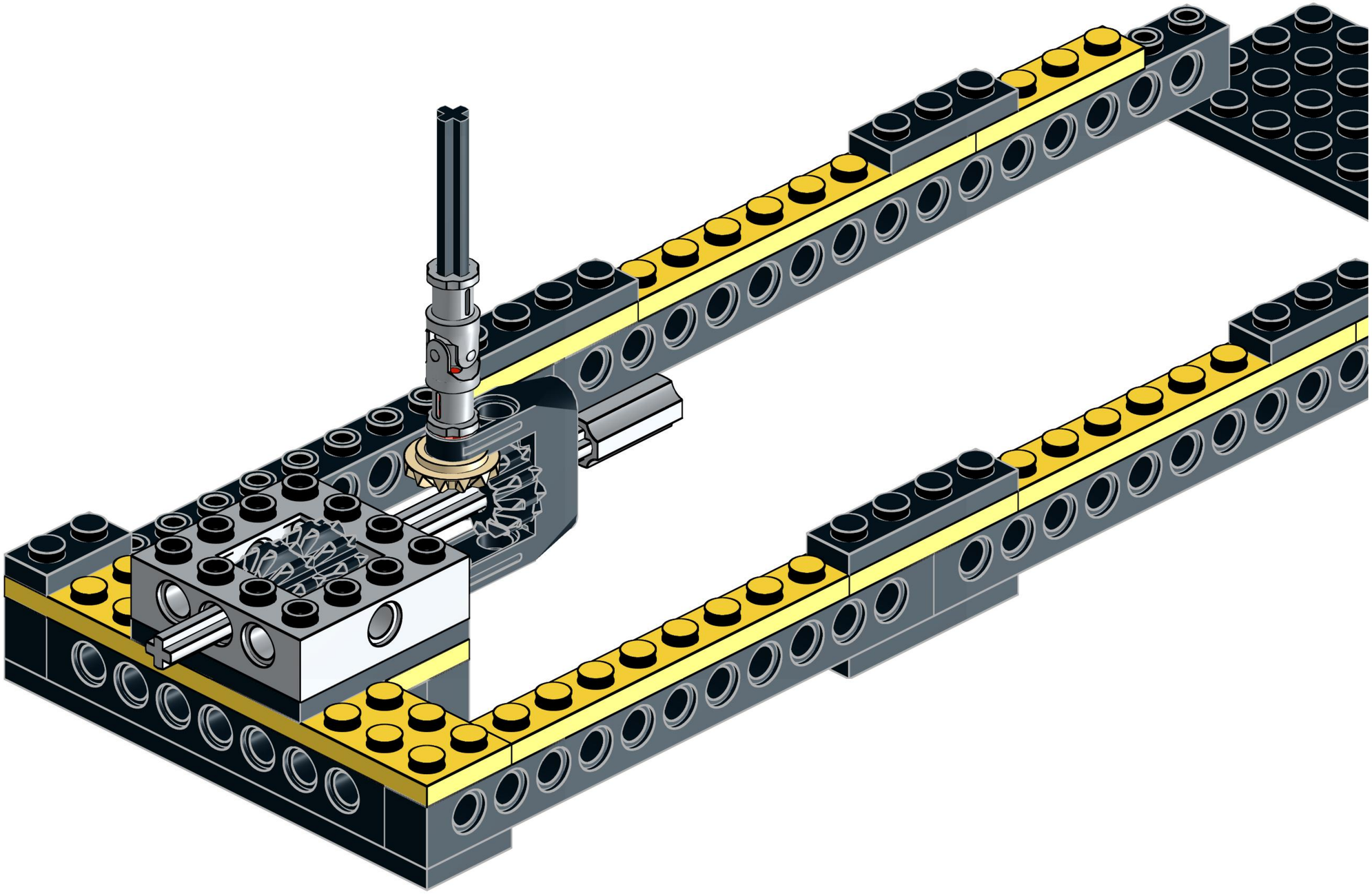

# Building and Installing the correct Motor Drive Unit

The next several pages will provide instructions detailing how to assemble and install the "M" motor drive unit sub-assembly, which is used to power the the normal, stand-alone GBC.  Proceed to the next page to build this drive unit.

If you are building an unpowered module which will be driven by a seperate module fitted with an "XL" motor drive unit, skip over these steps and continue on the page marked "Resume Here."

If you intend to install an "XL" motor drive unit which can be used to drive this GBC as well as several connected, unpowered modules, skip over these steps, continuing on the page marked "Resume Here."  Once you have completed these instructions, you will then need to follow the seperate instructions to build and install the "XL" motor drive unit.

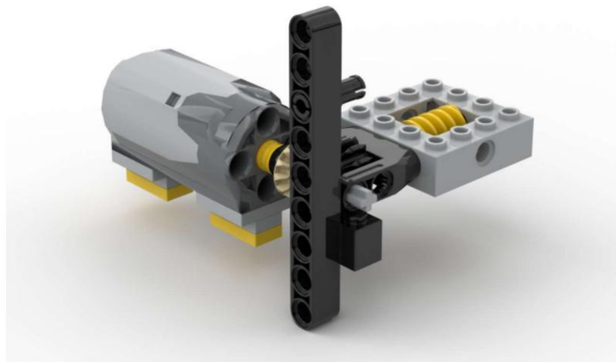

"M" Motor Drive Unit

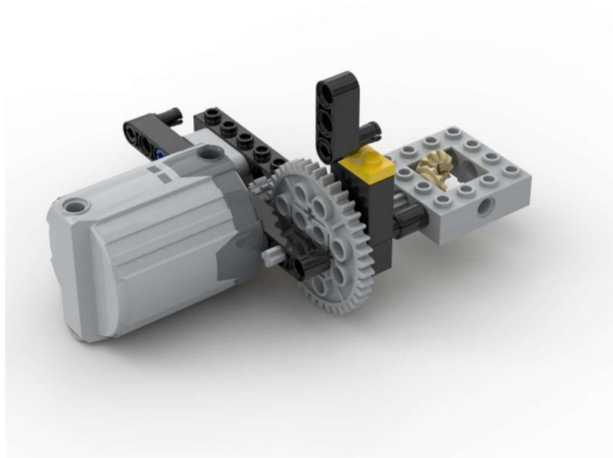

"XL" Motor Drive Unit

# 17

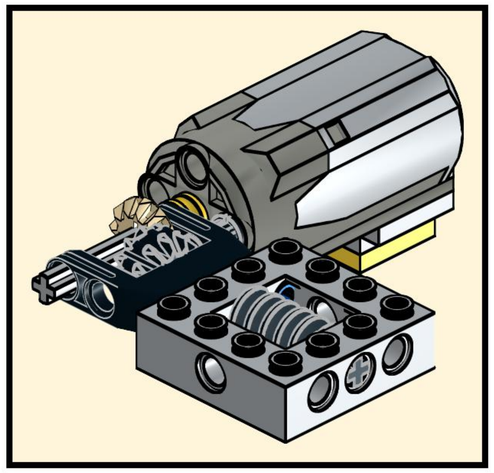

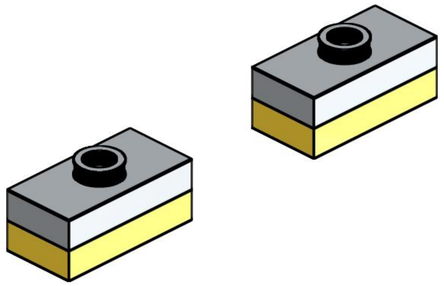

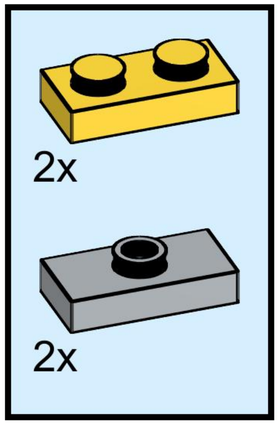

# 18

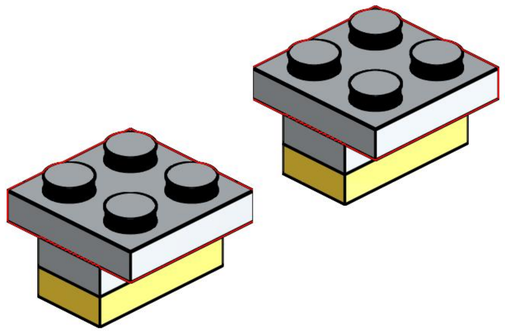

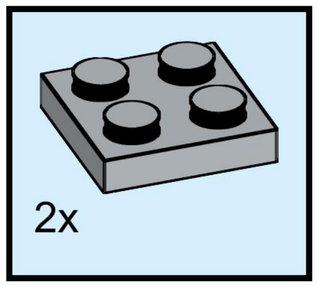

# 19

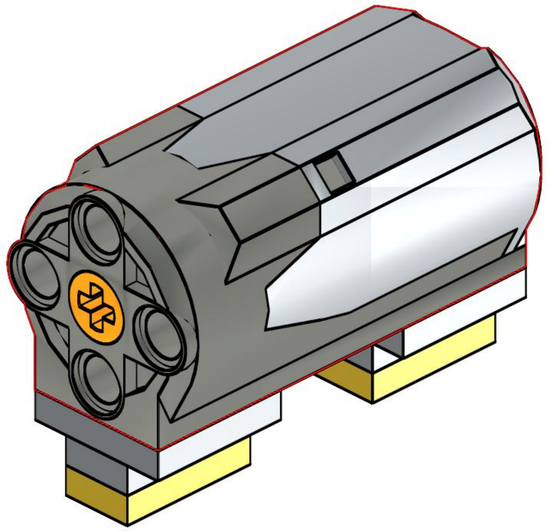

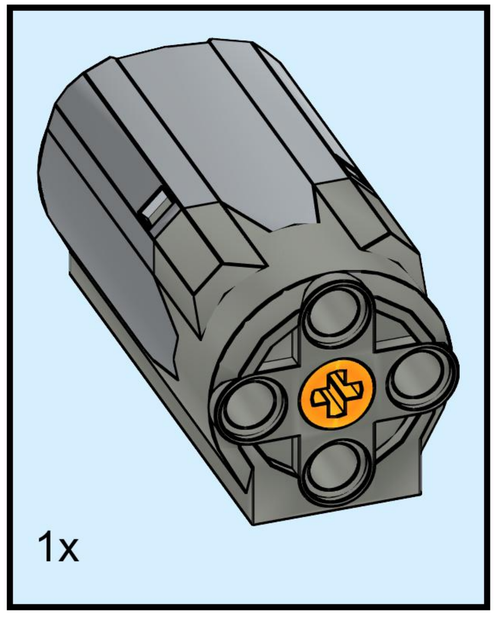

# 20

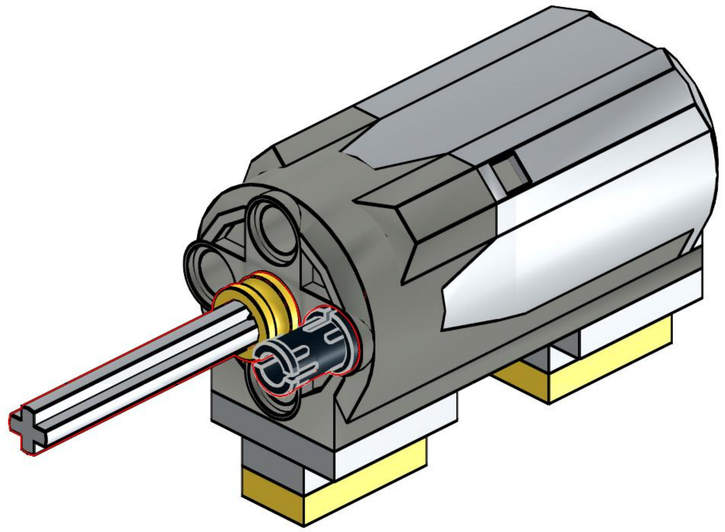

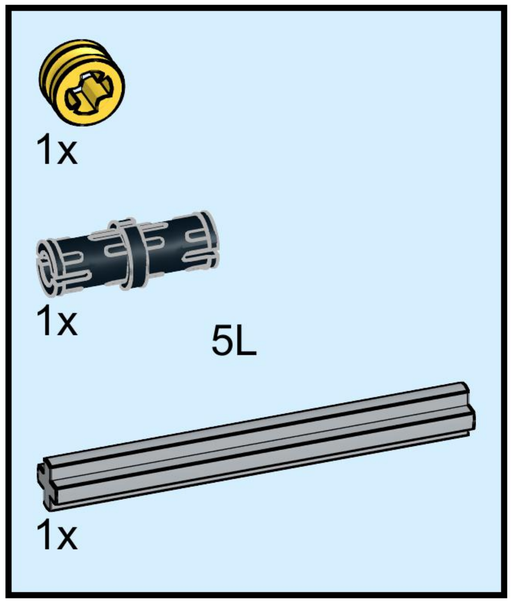

# 21

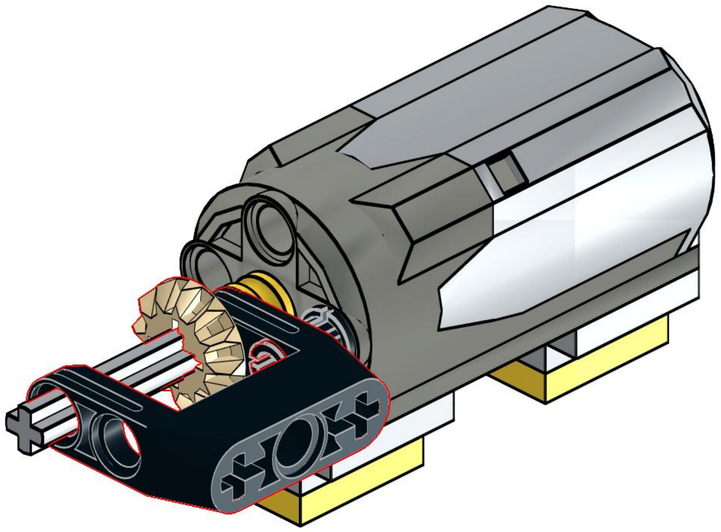

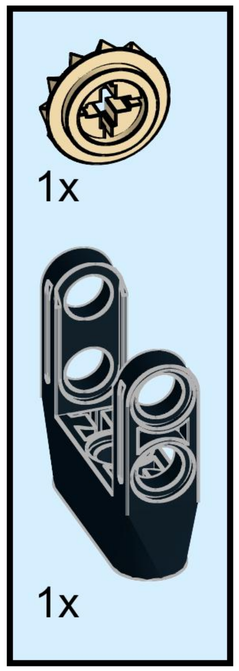

# 22

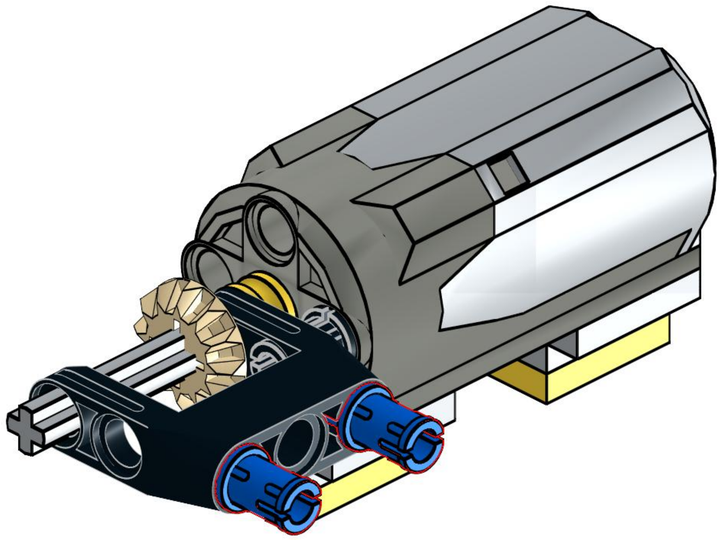

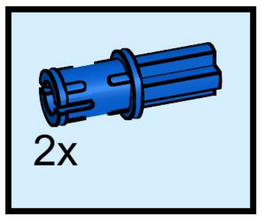

# 23

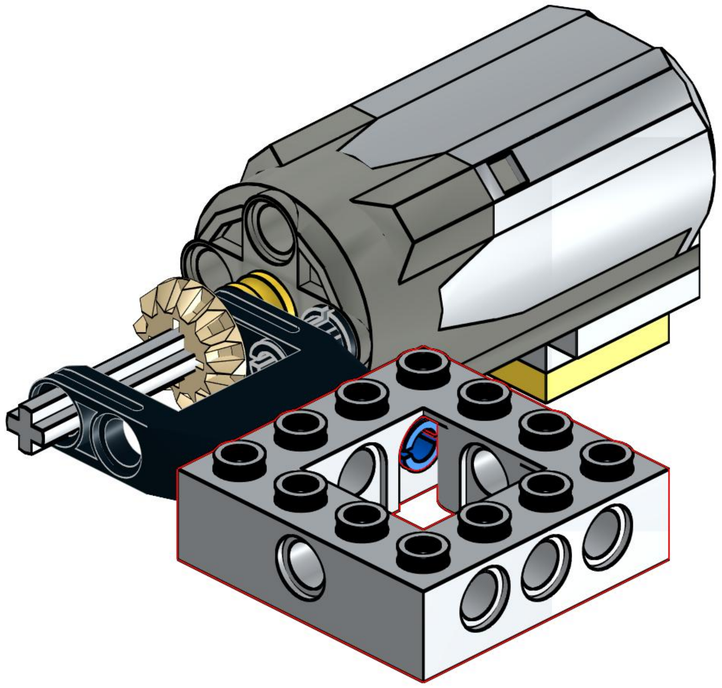

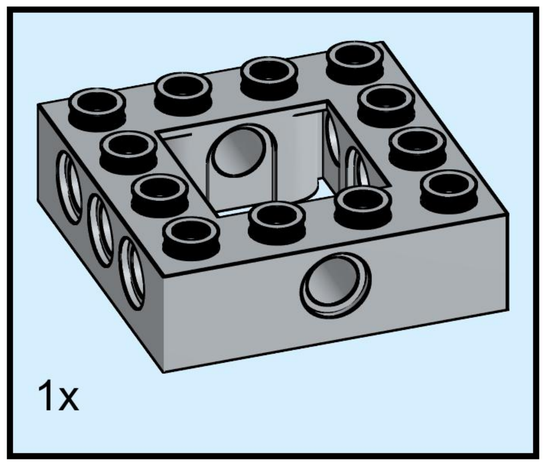

# 24

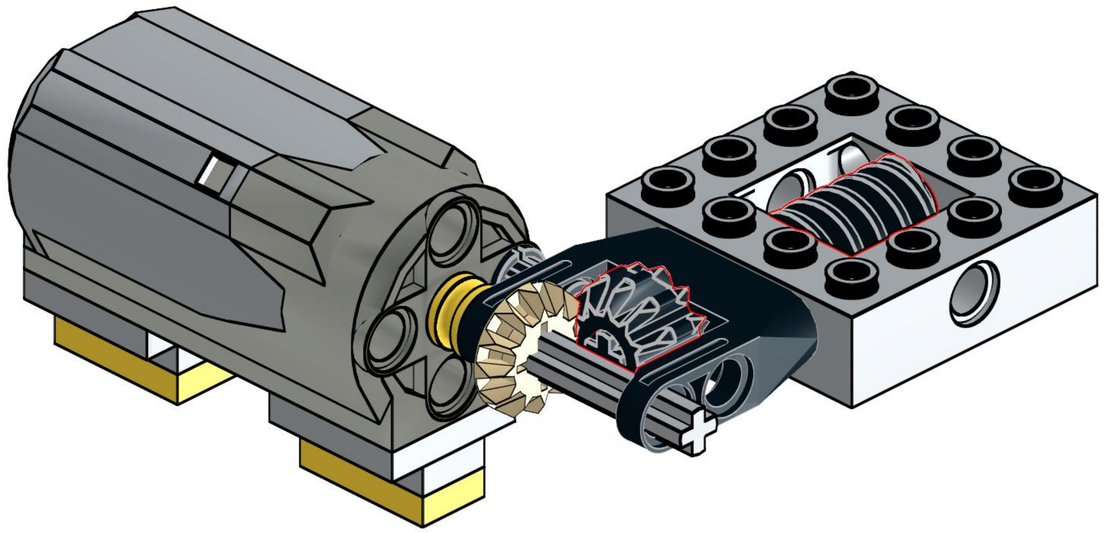

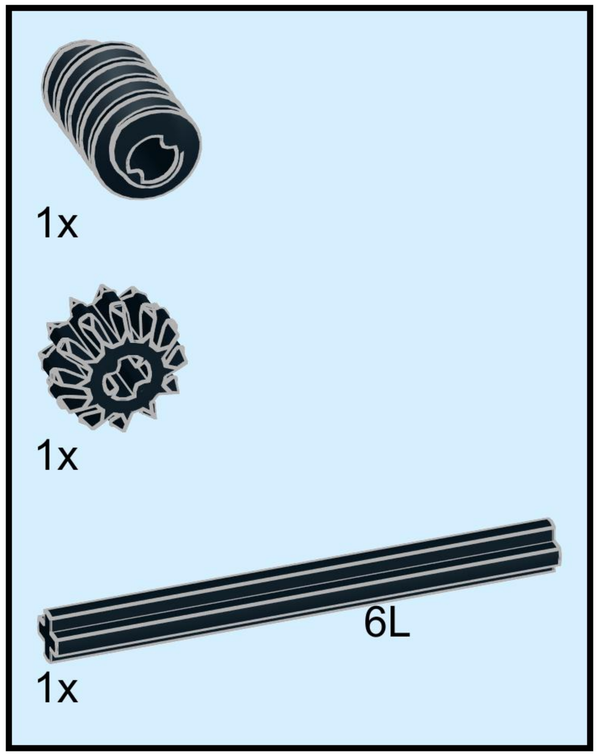

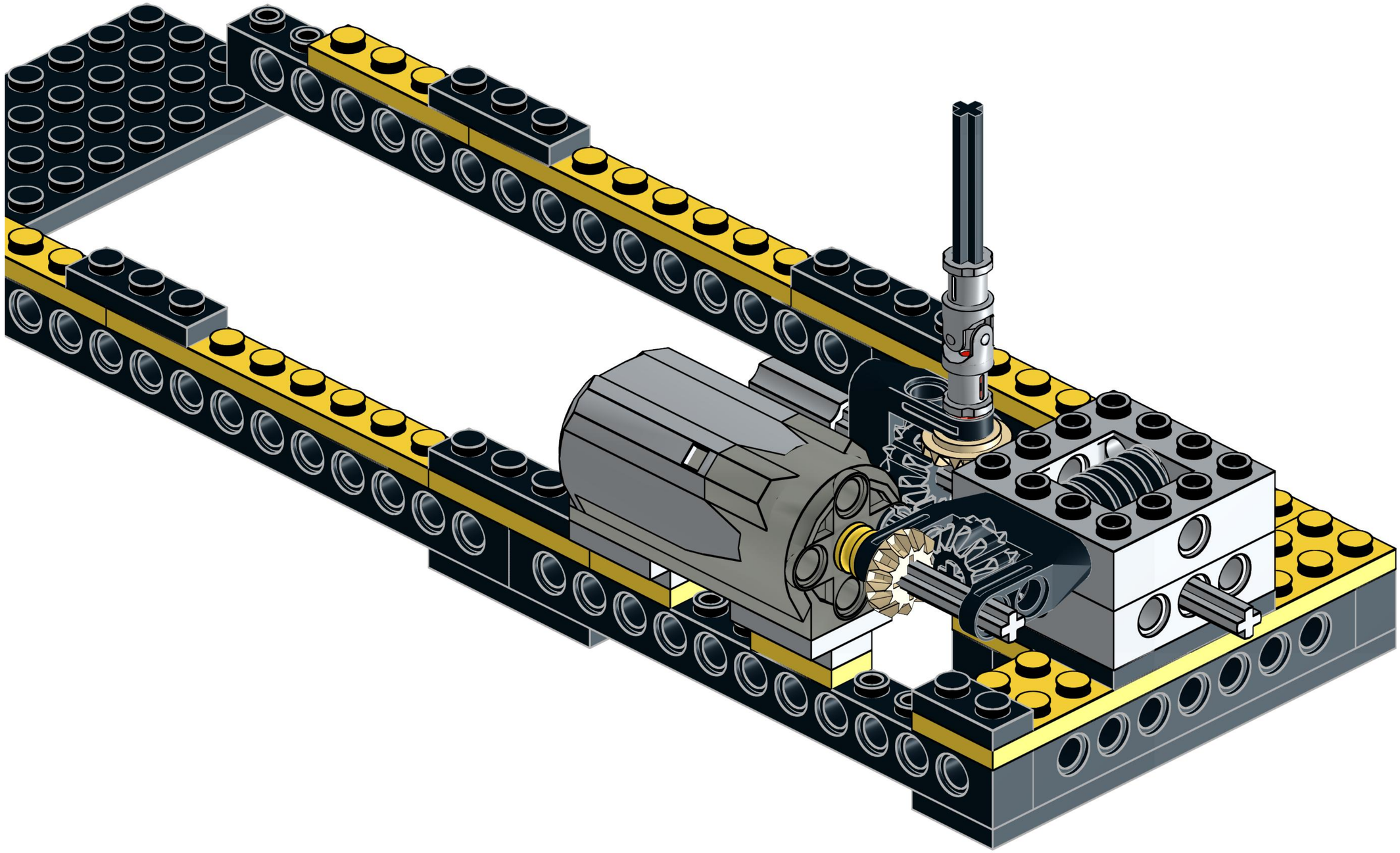

# 26 Resume Here

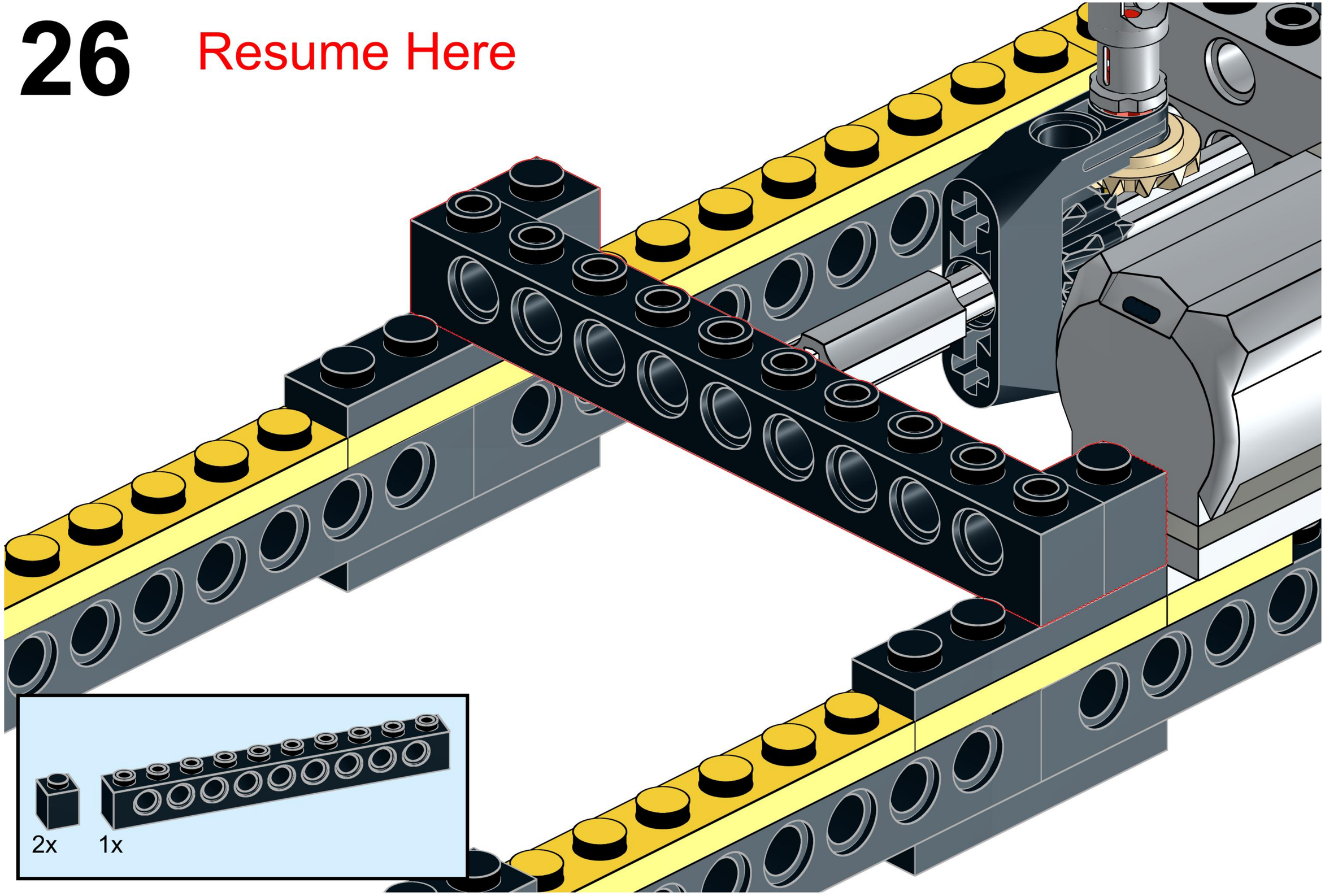

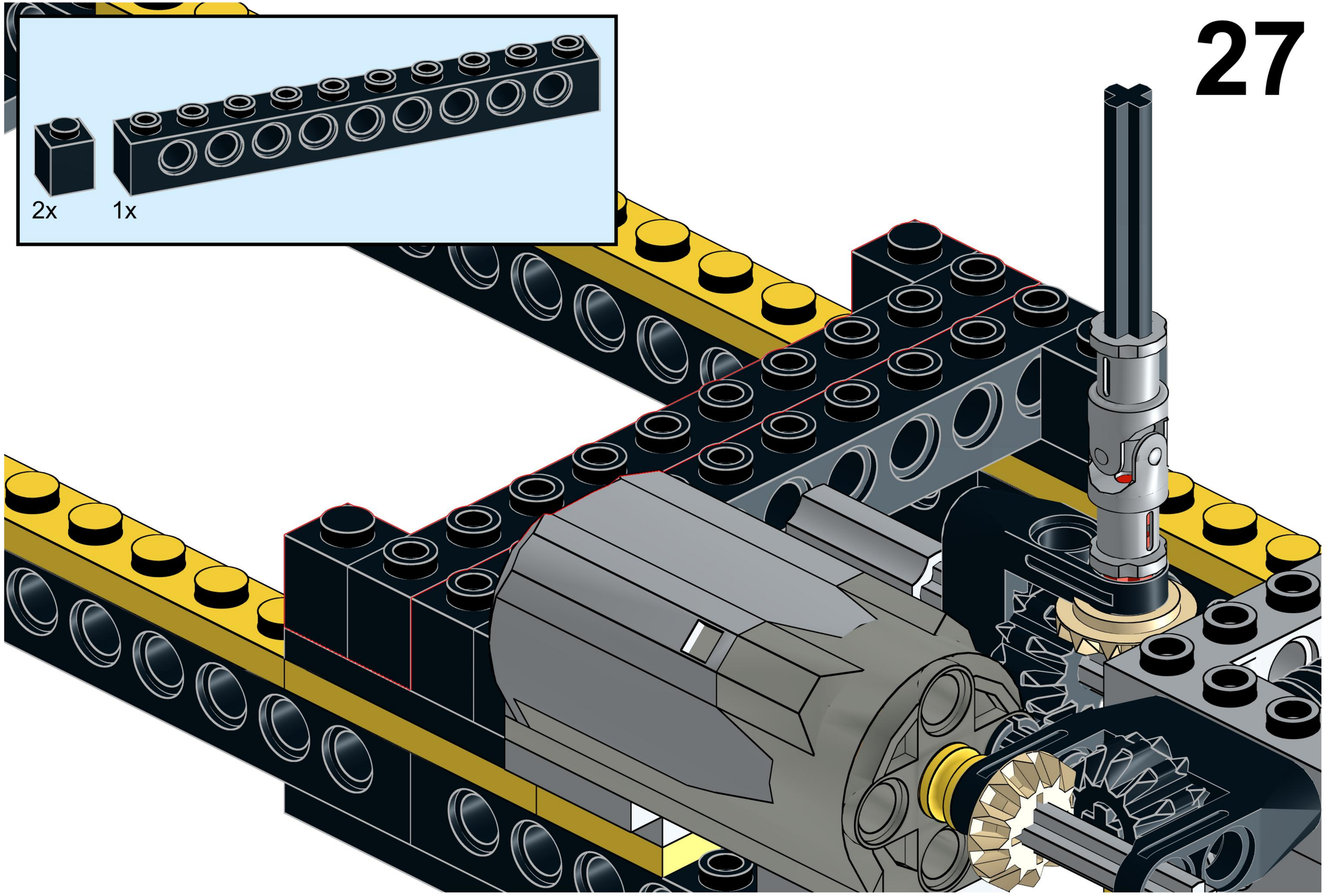
2x
1x

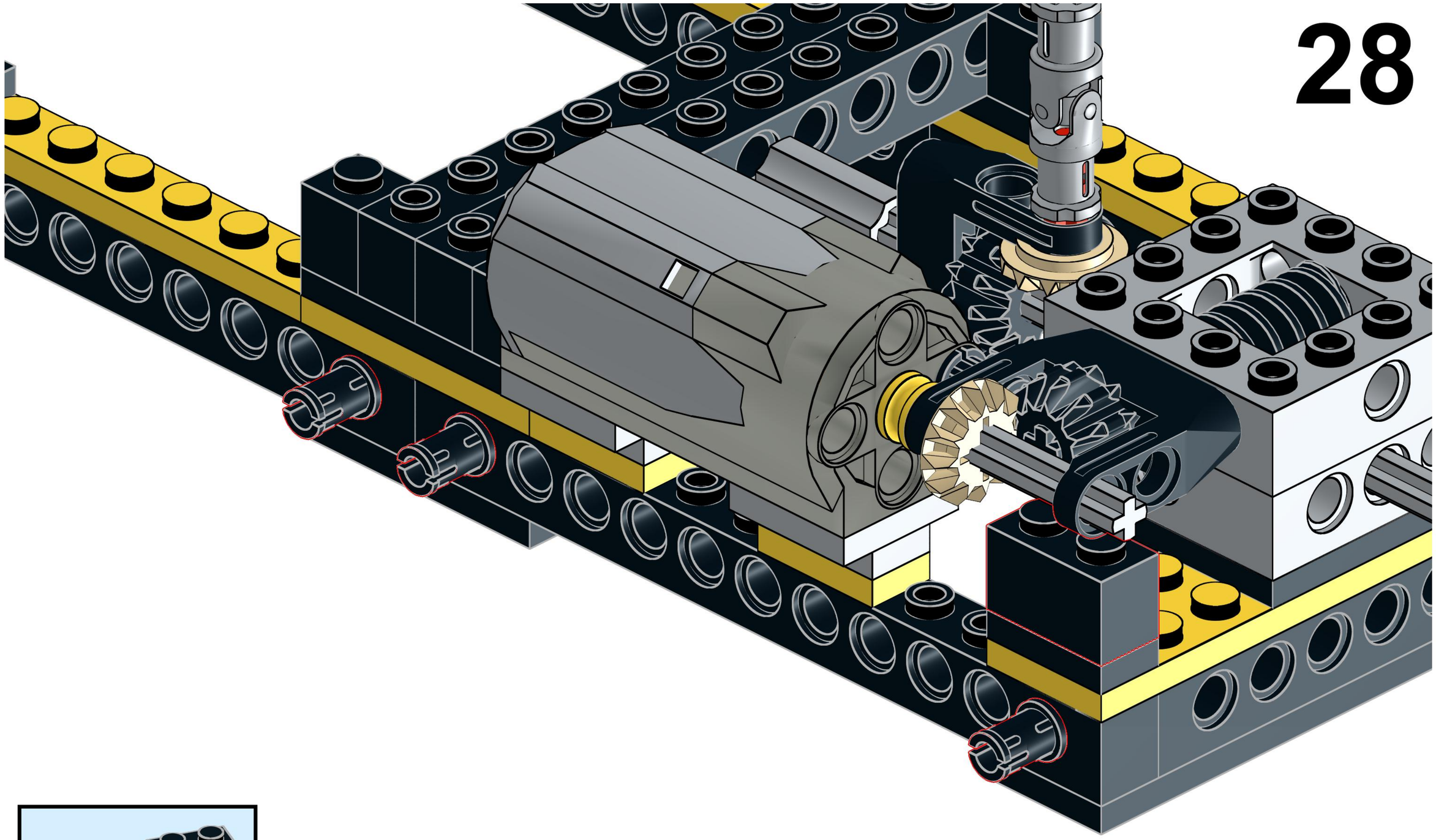

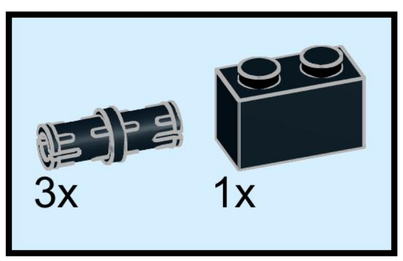
3x
1x

# 29

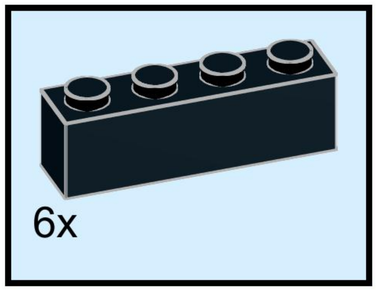


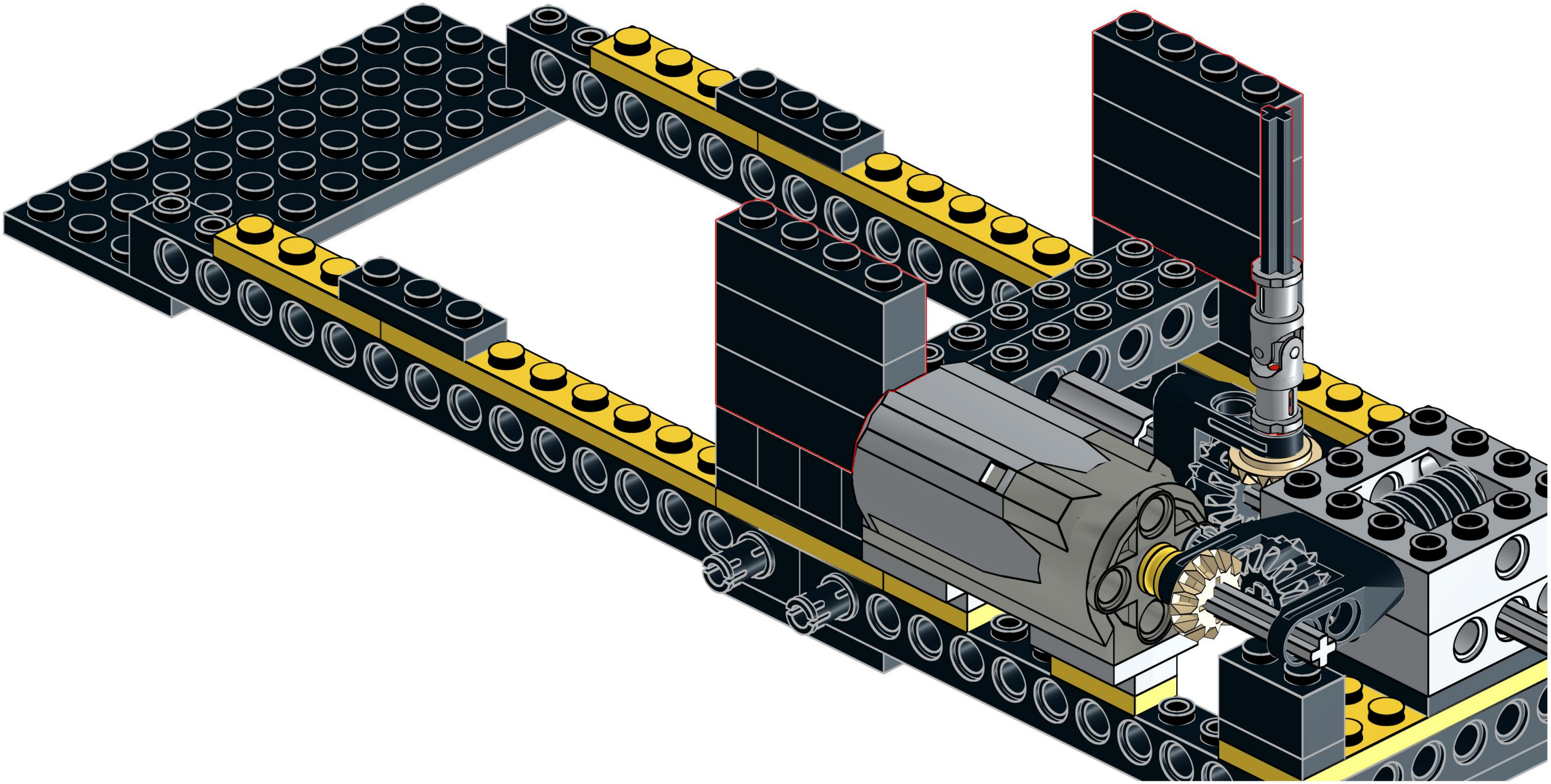

# 30

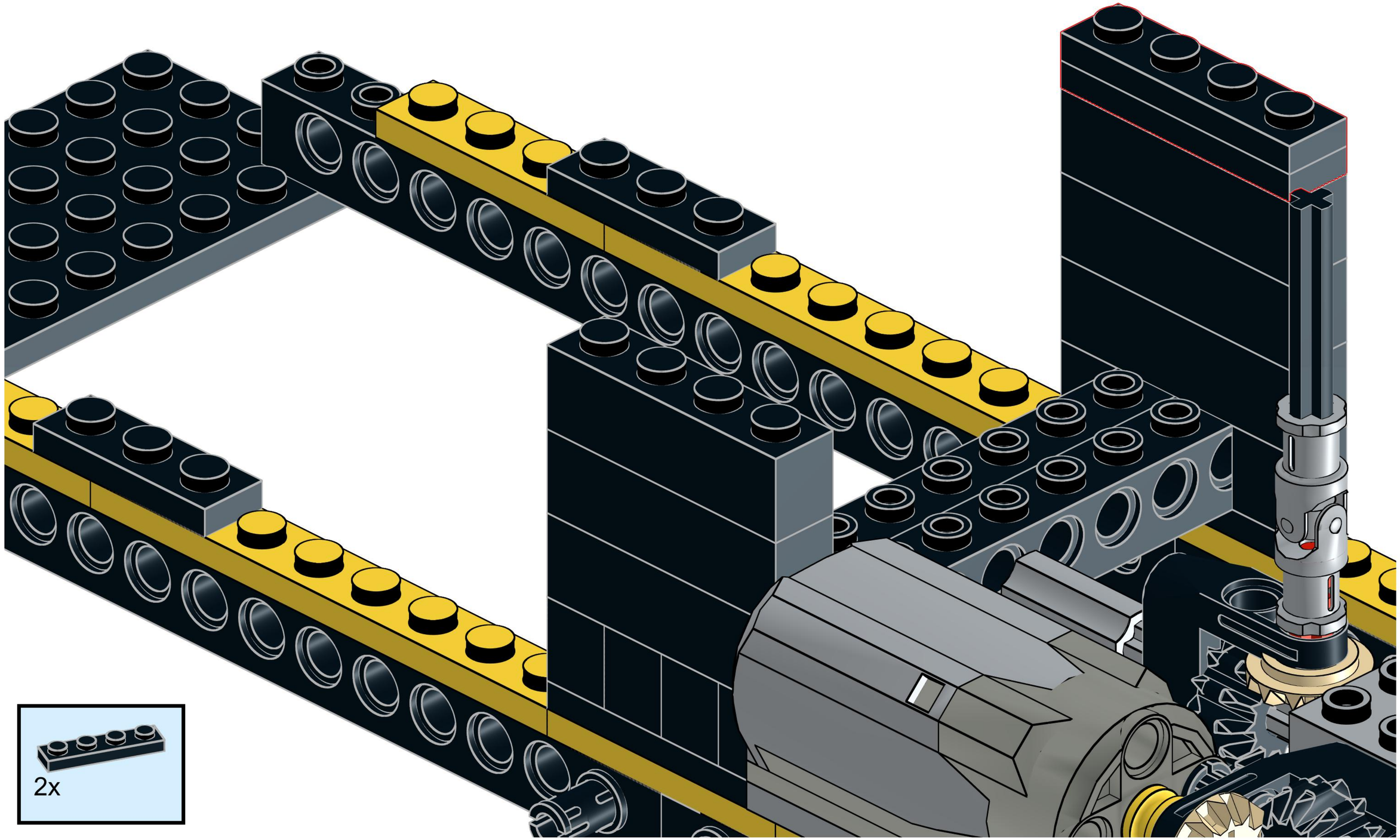

# 31

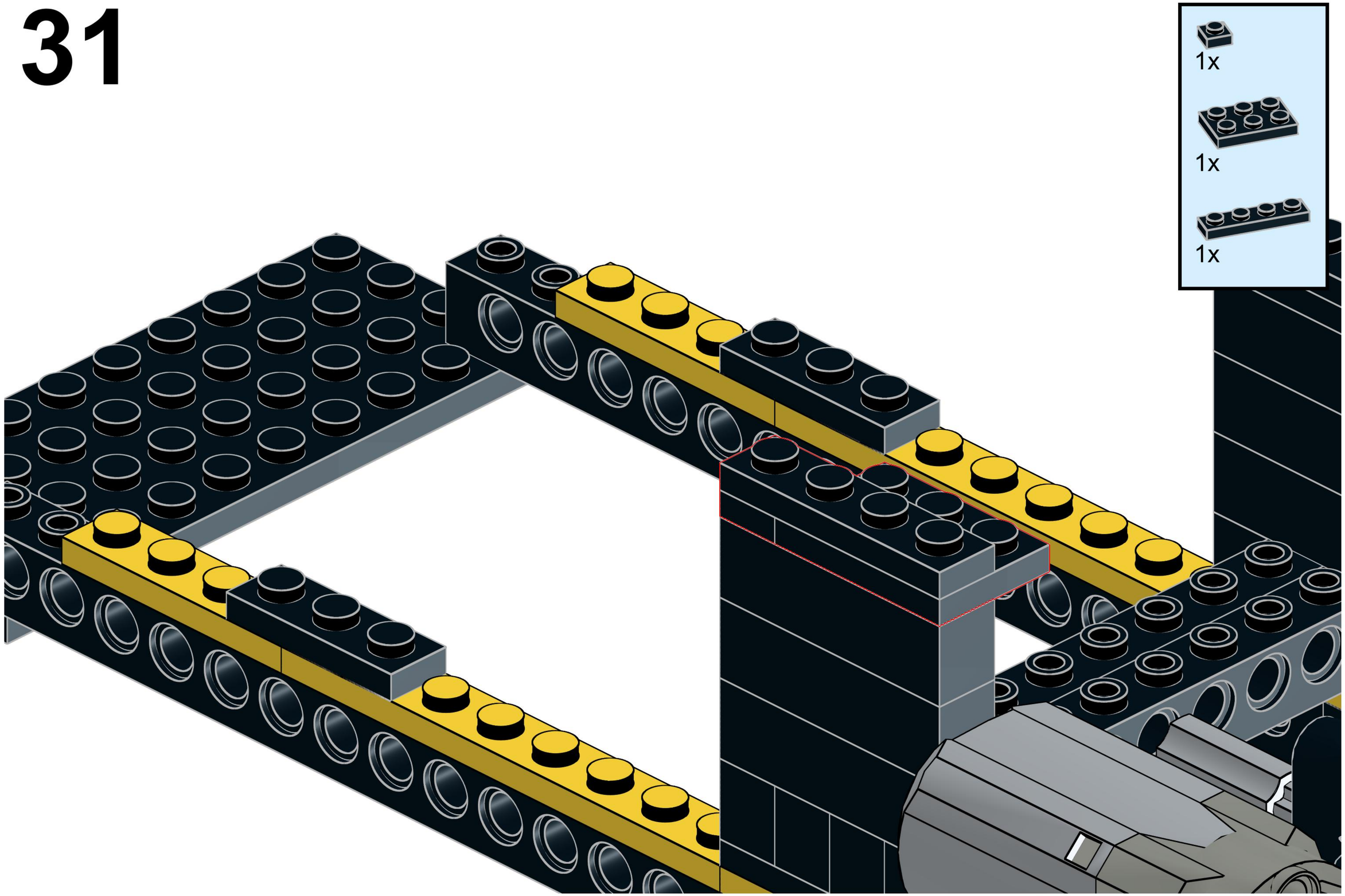

# 32

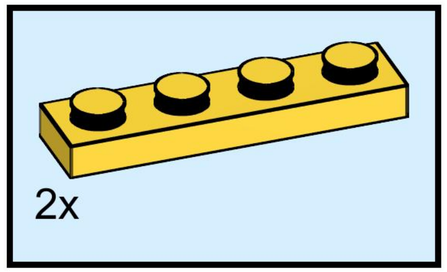


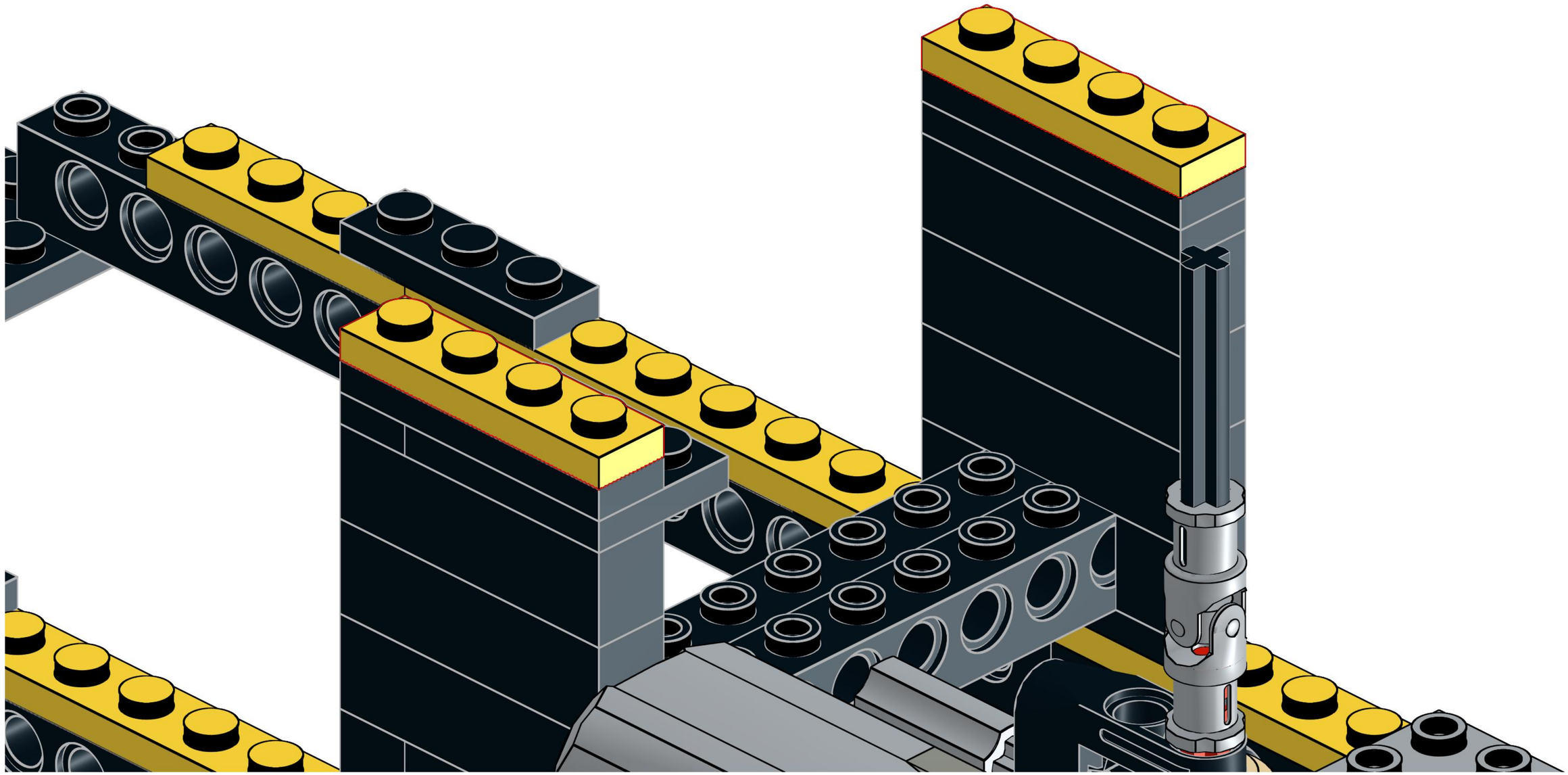

# 33

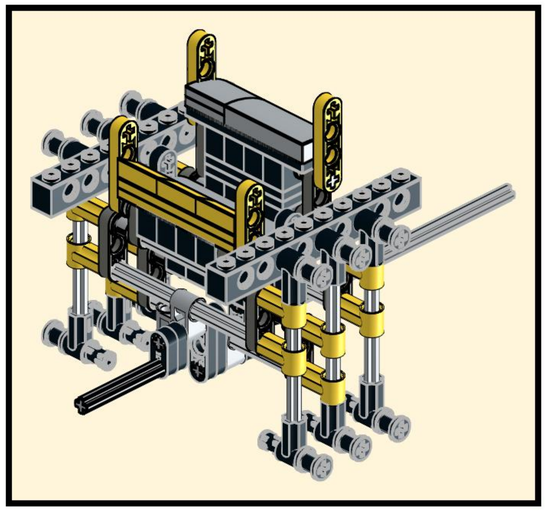

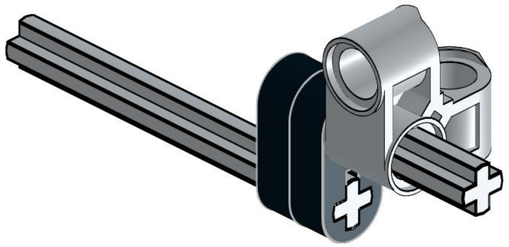

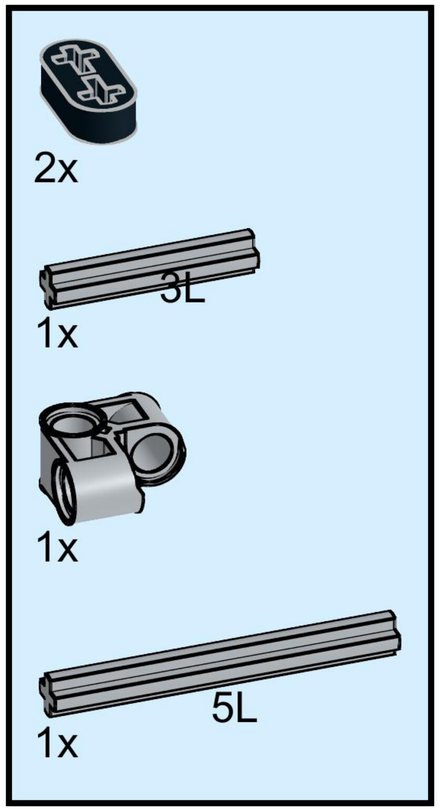

# 34

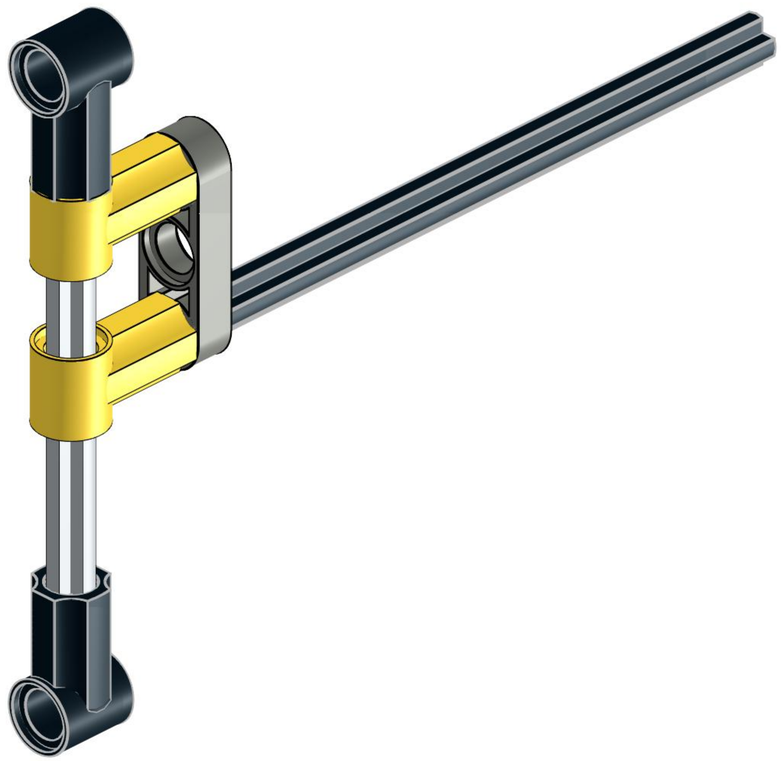

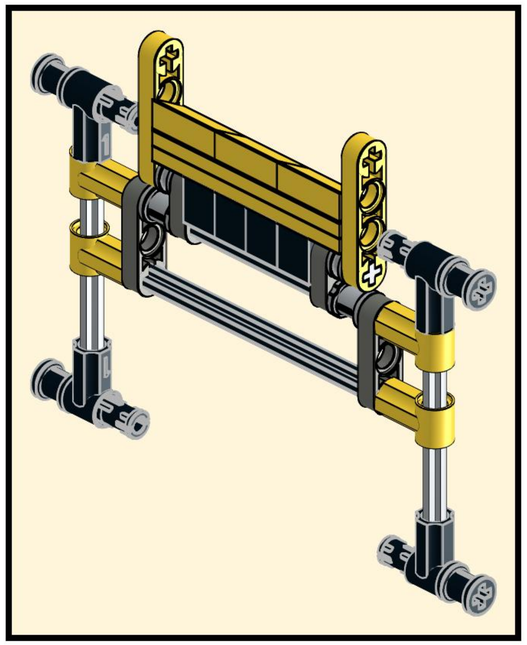

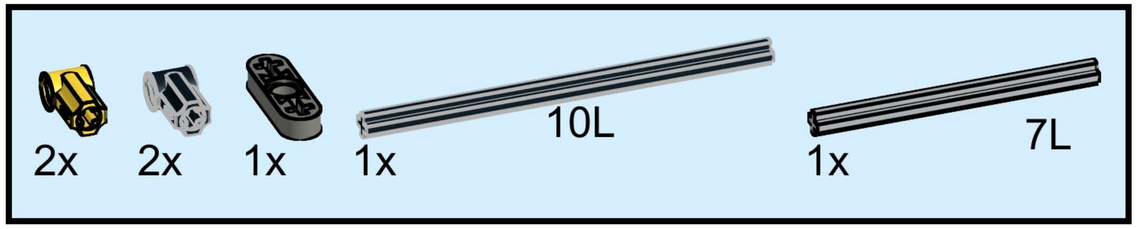


Before building this sub-assembly, view the next several steps to understand how it will be attached to the drive shaft.

# 35

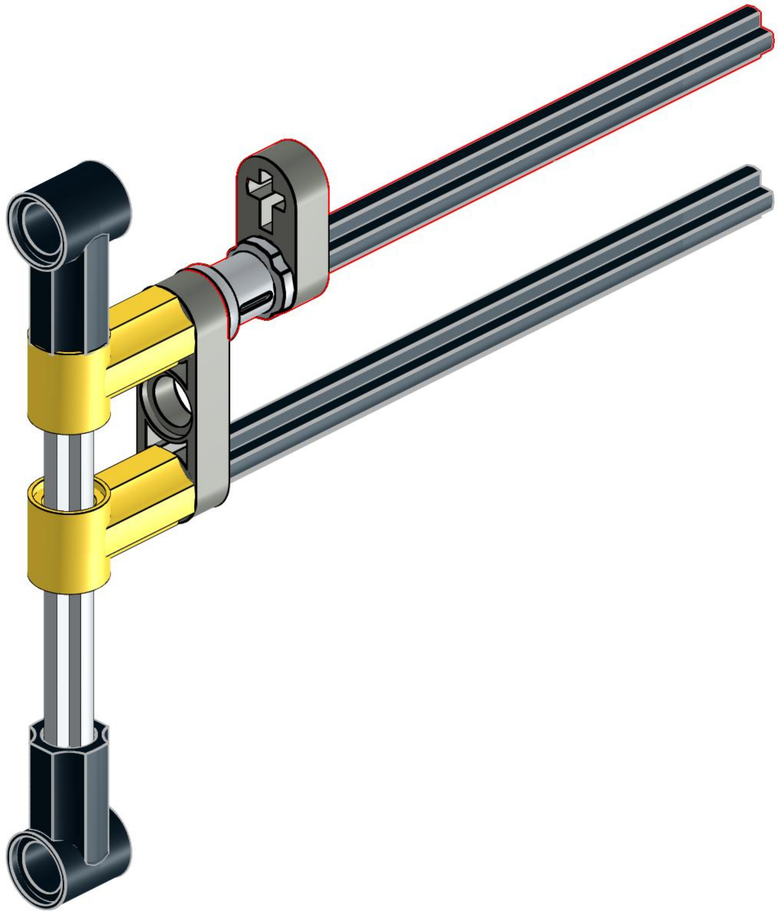

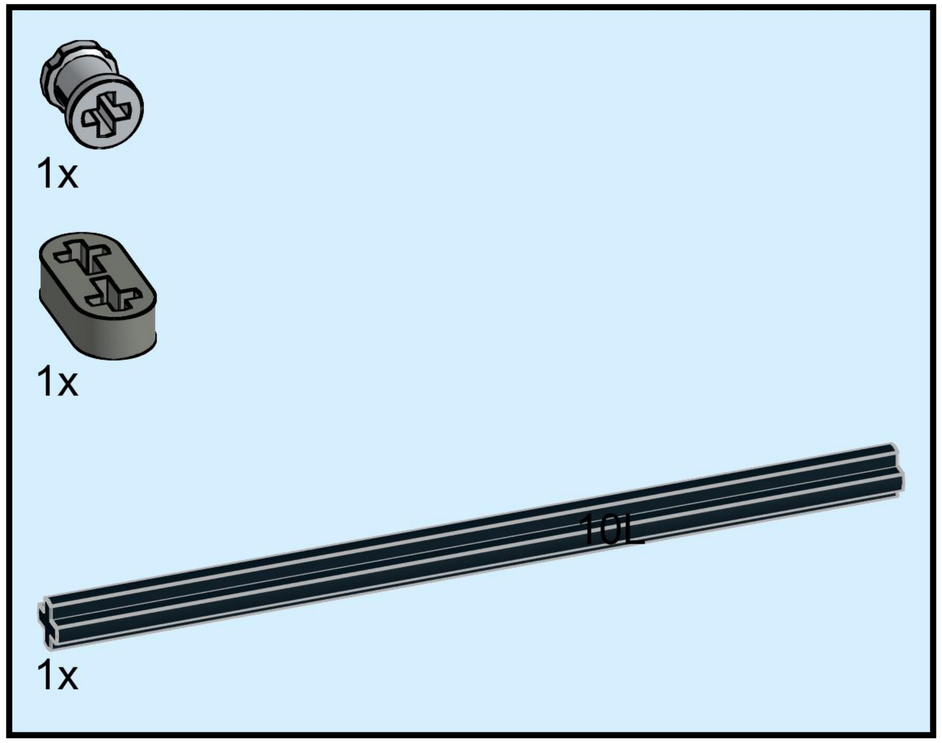

# 36

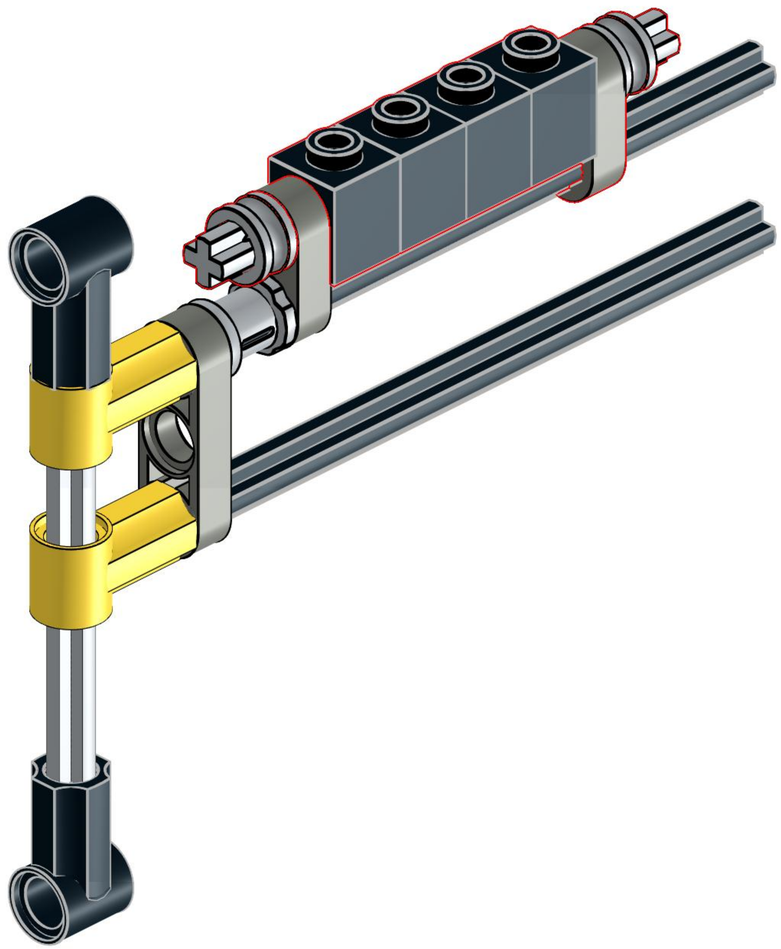

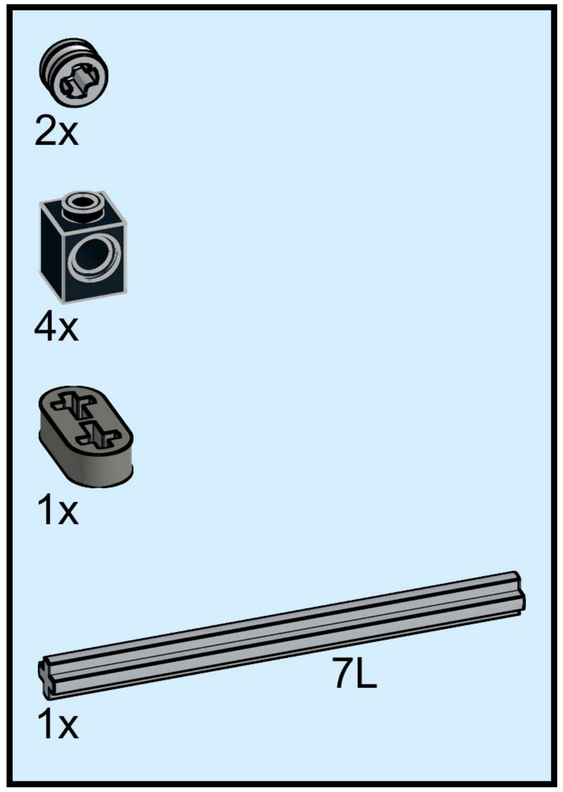

# 37

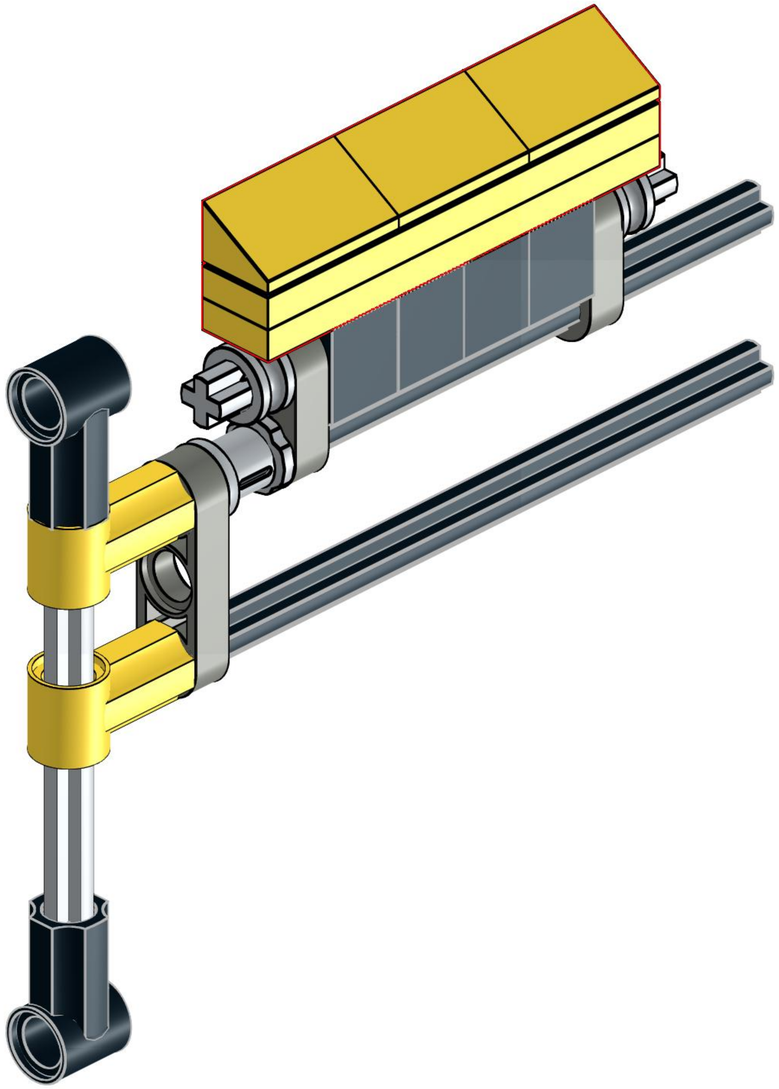

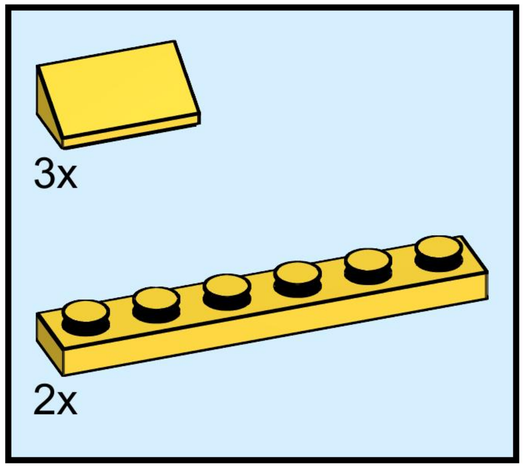

# 38

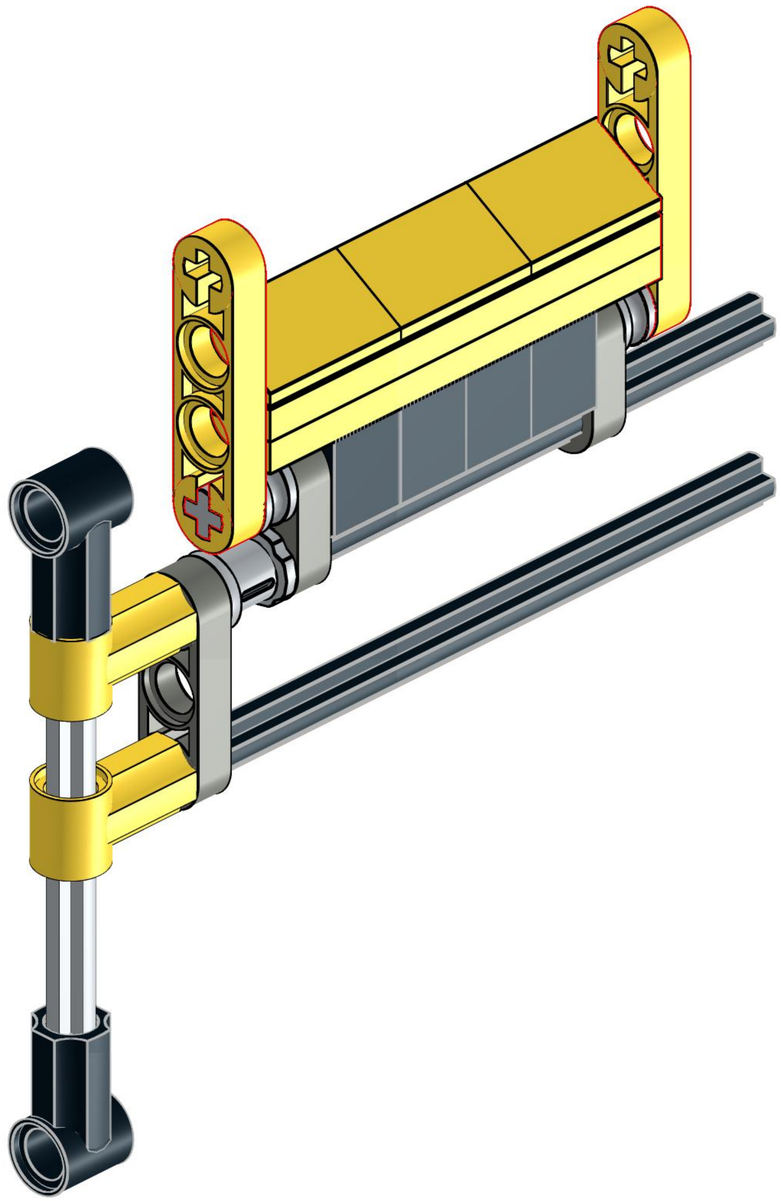

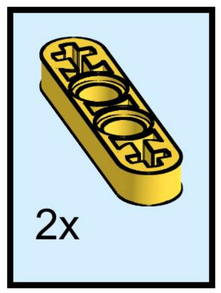

# 39

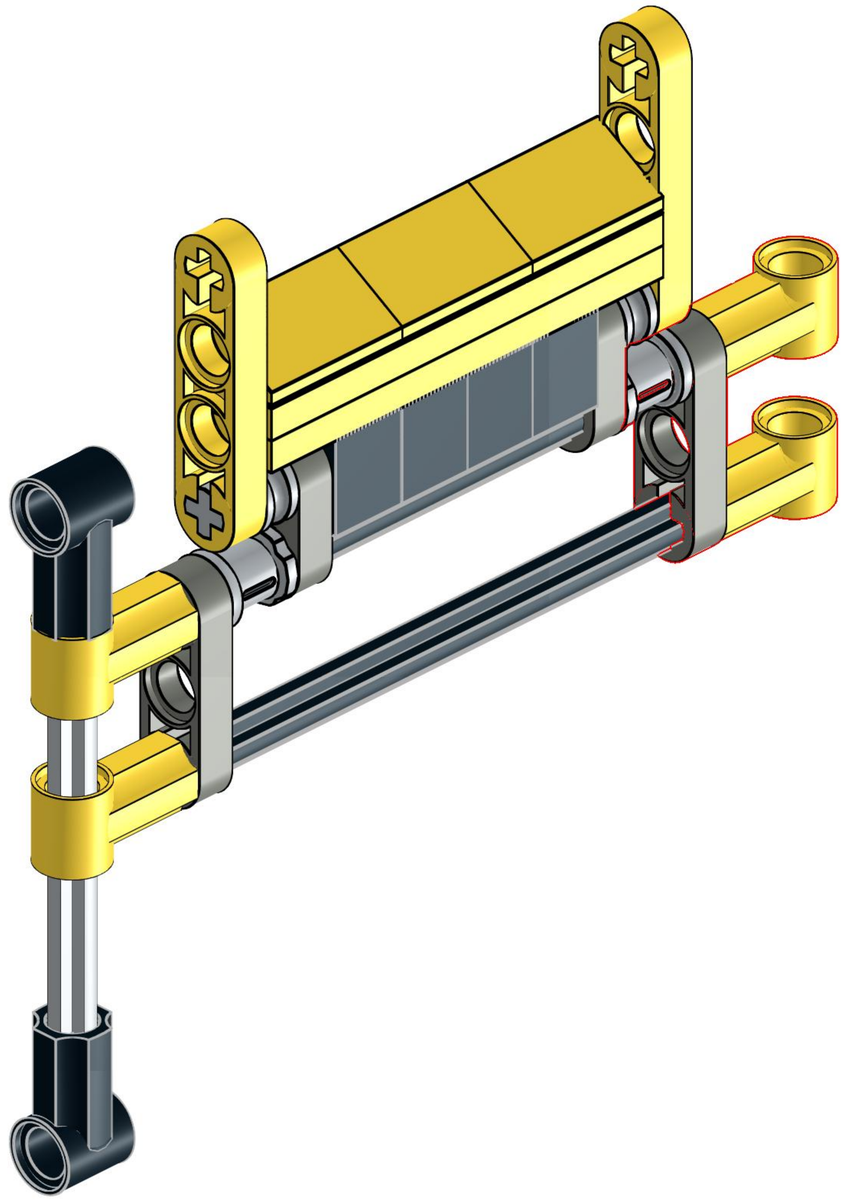

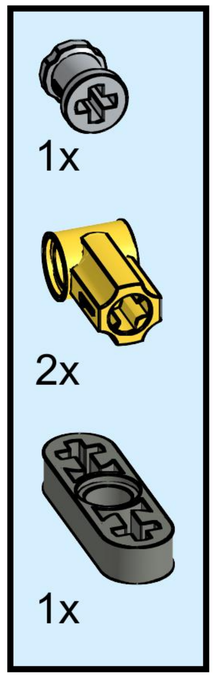

# 40

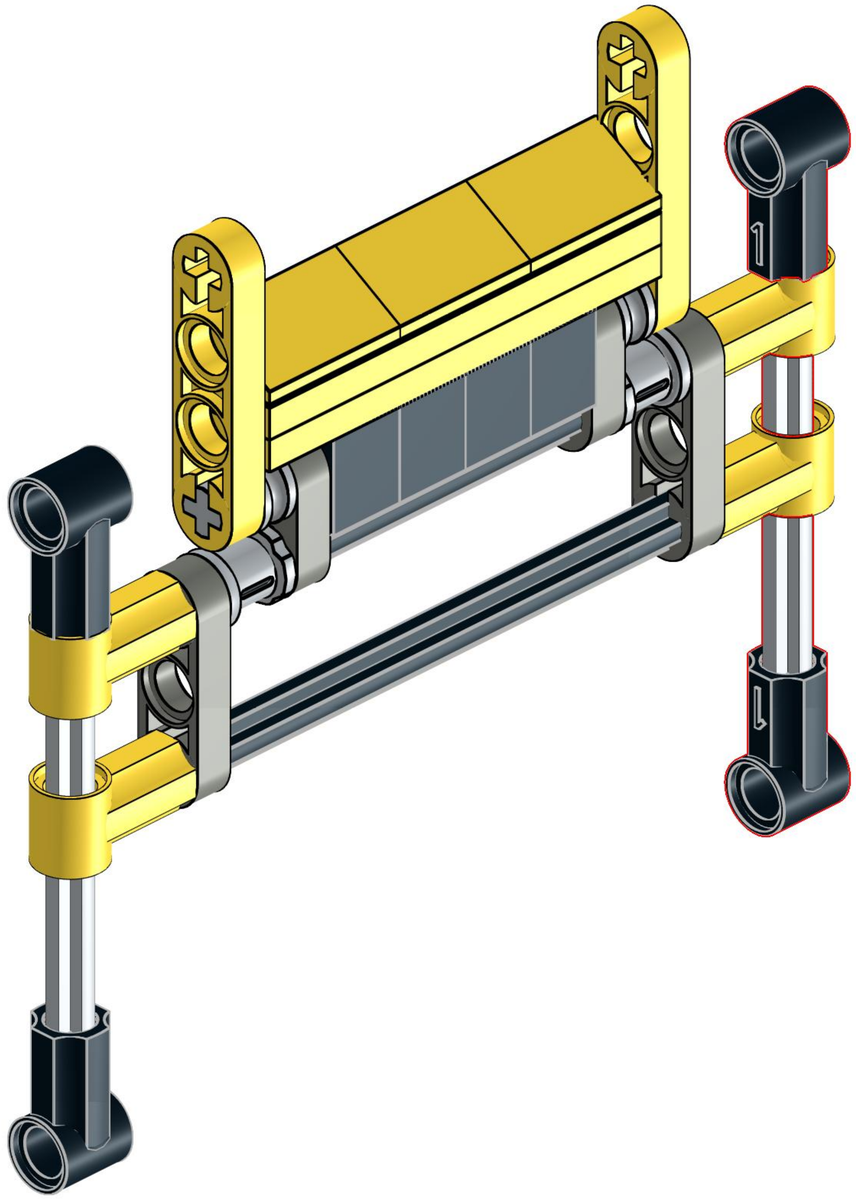

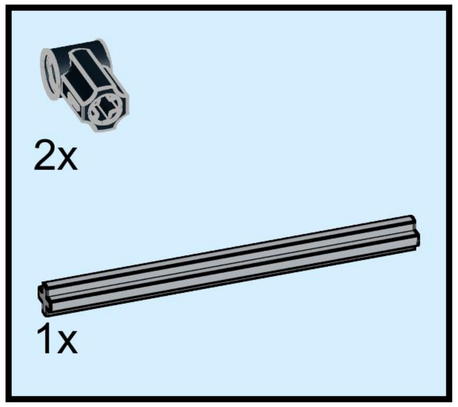

# 41

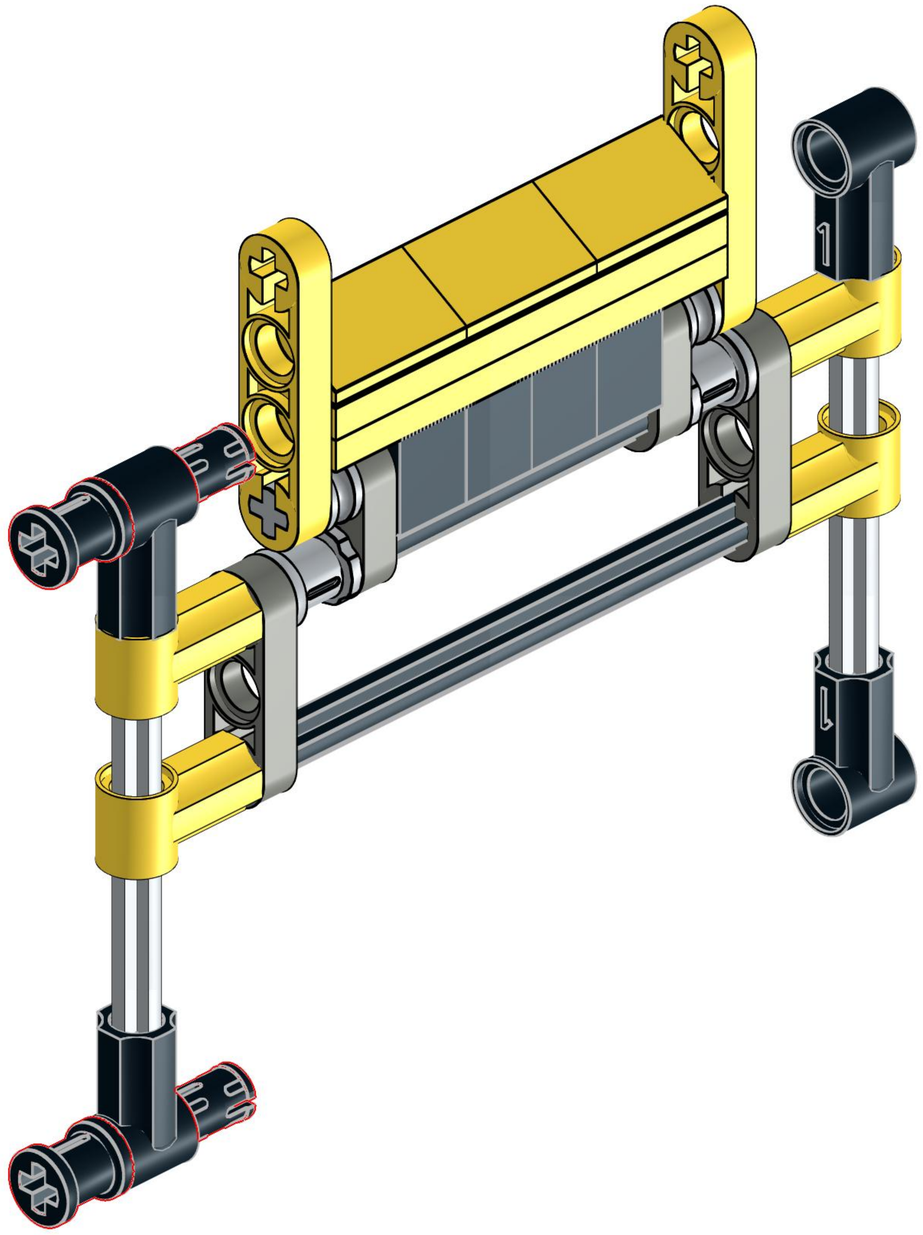

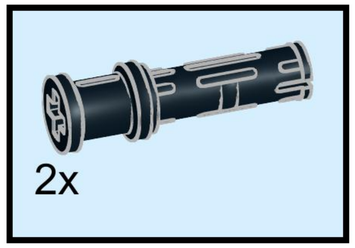

# 42

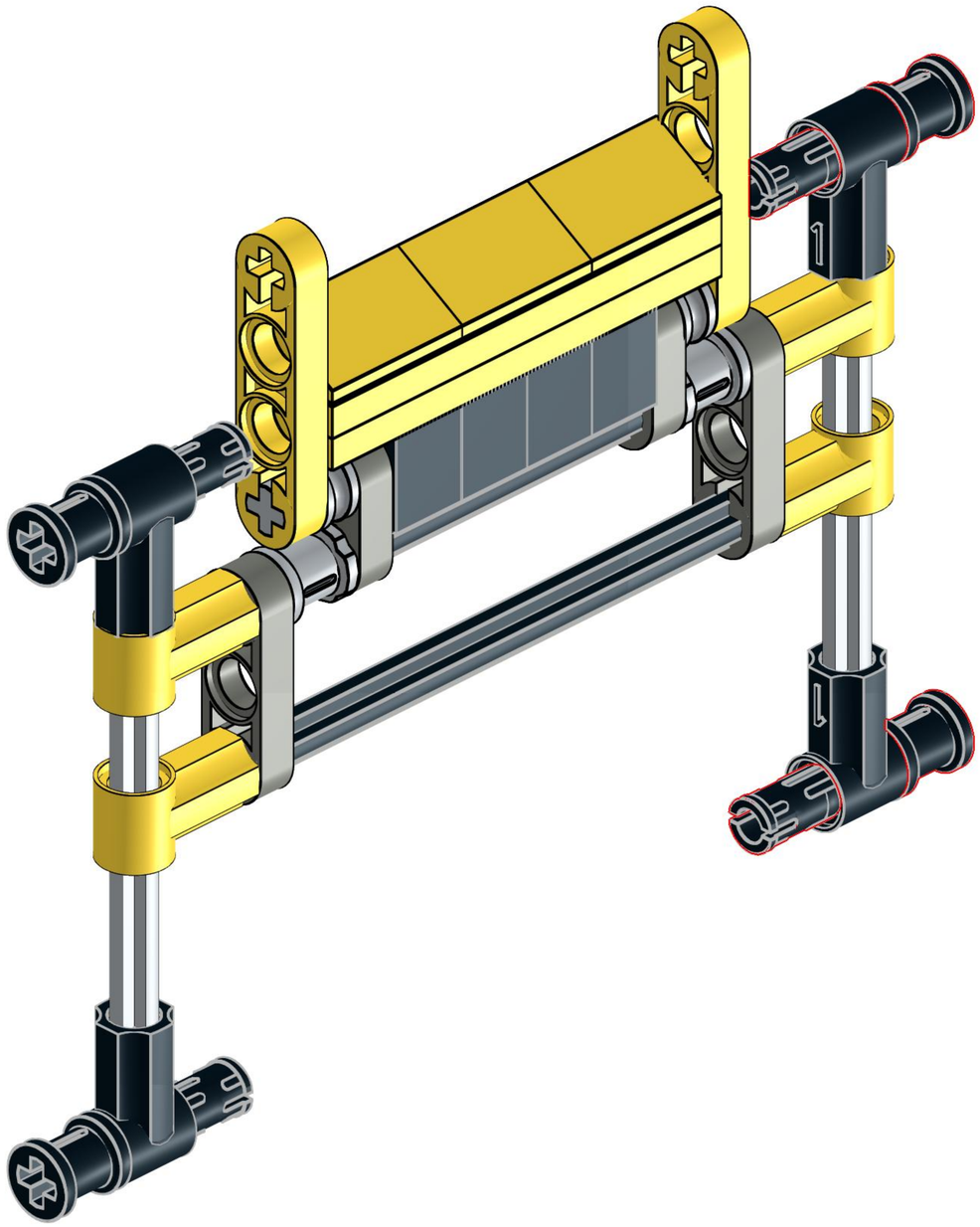

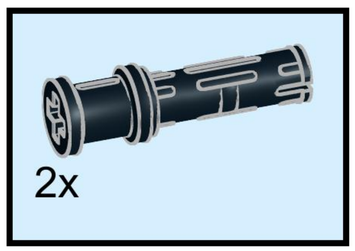

# 43

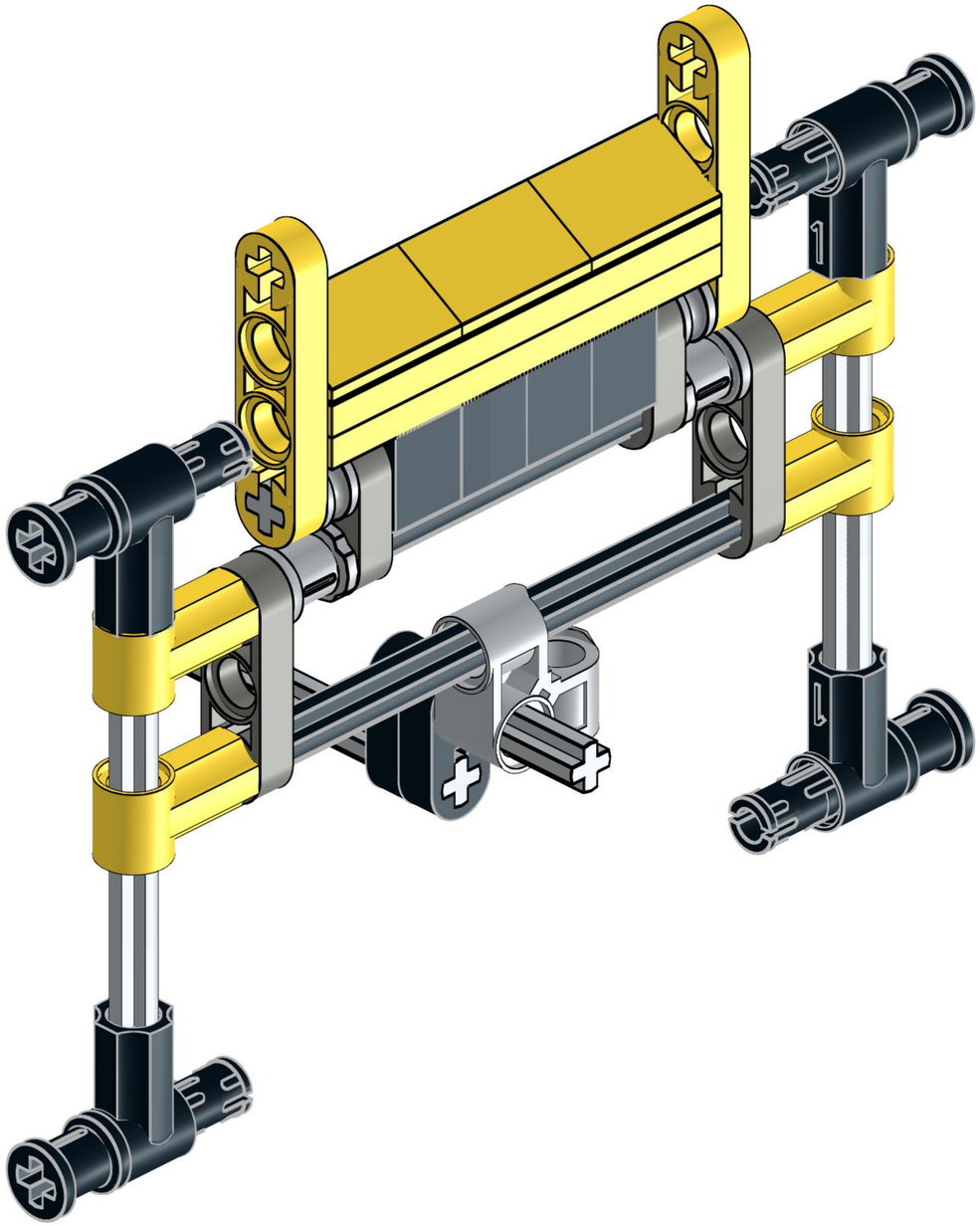

# 44

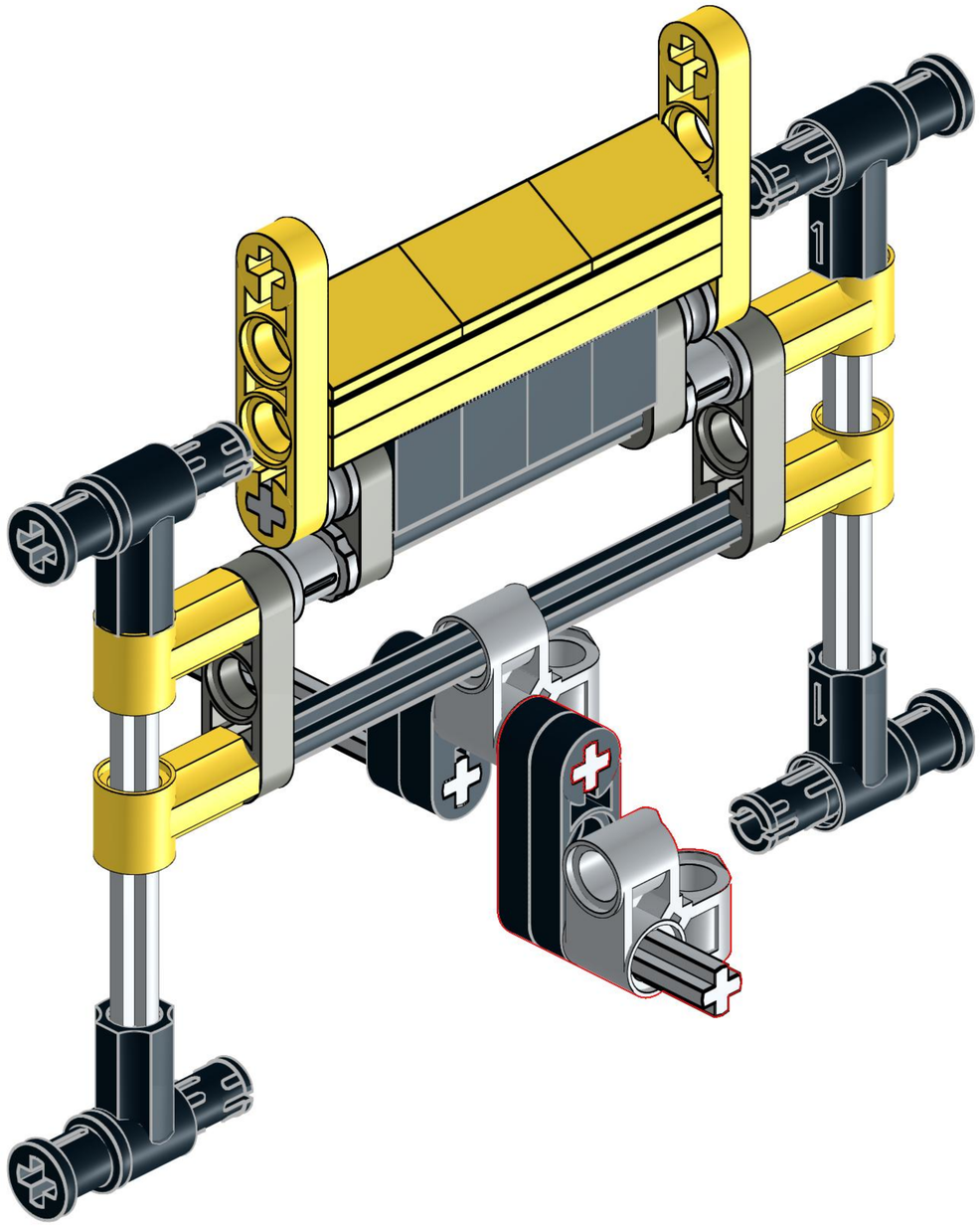

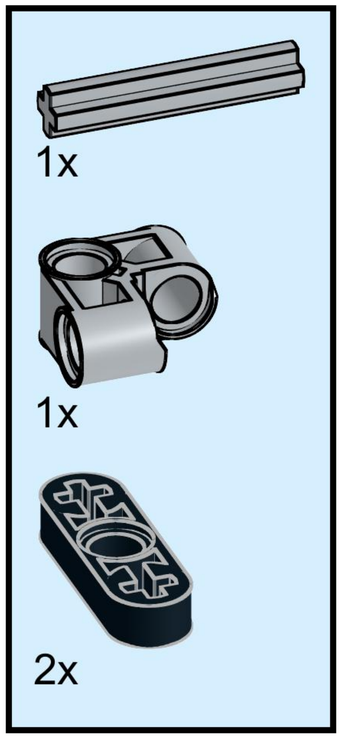

# 45

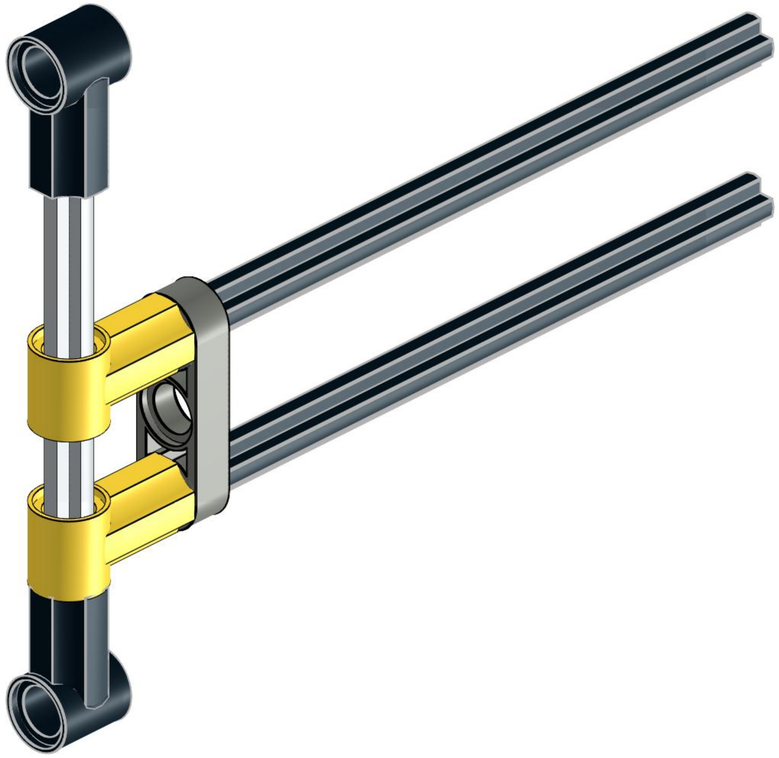

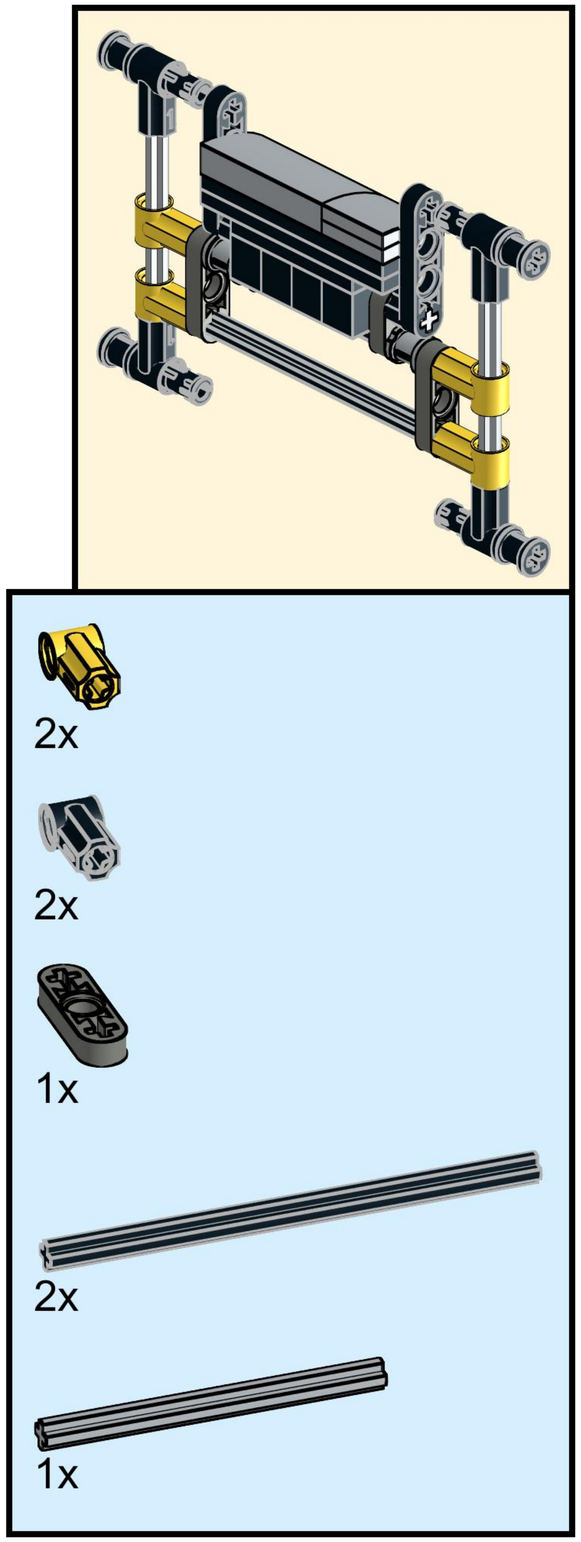

# 46

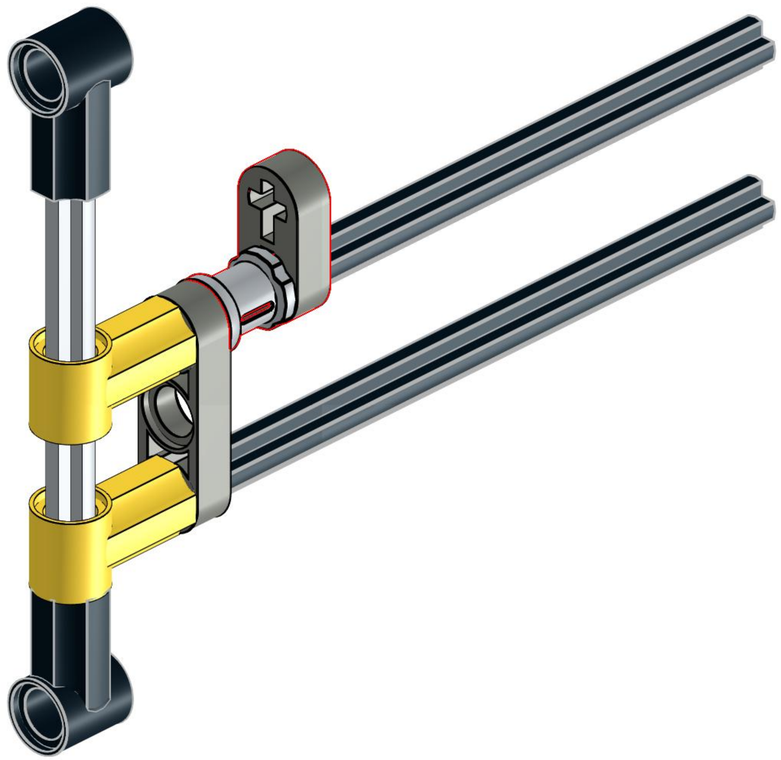

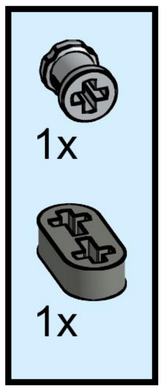

# 47

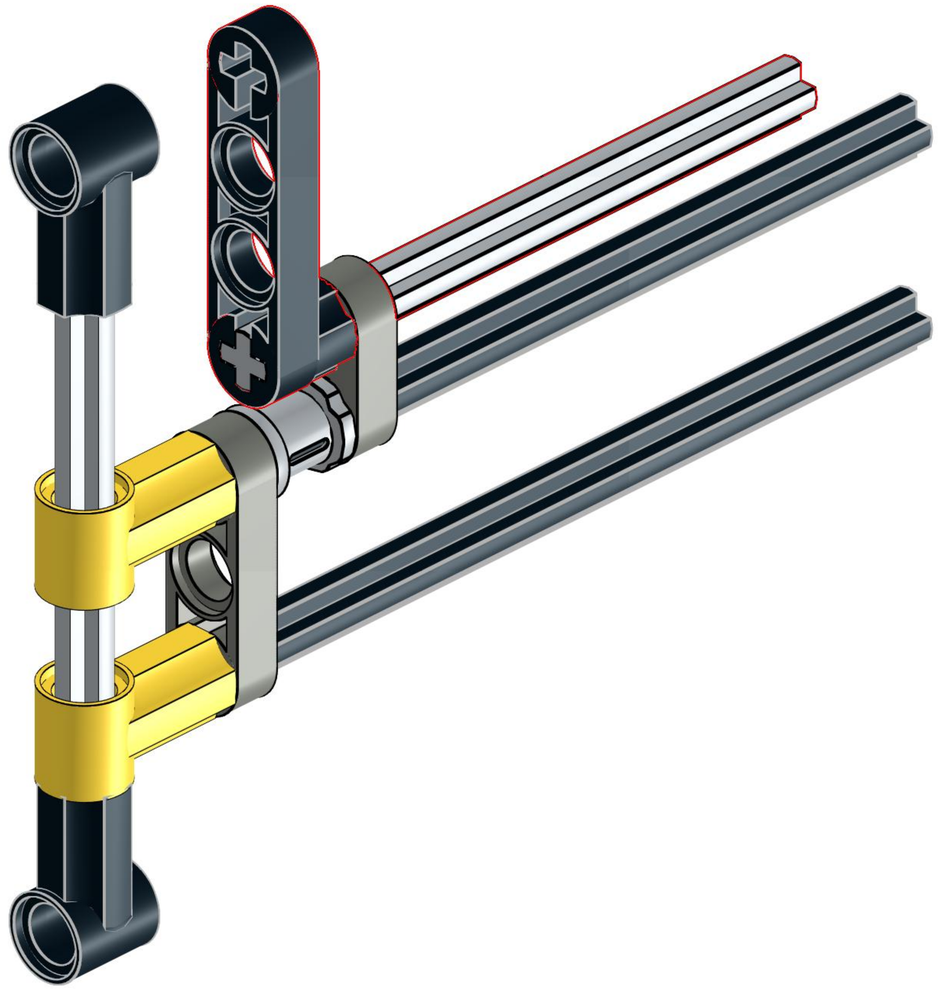

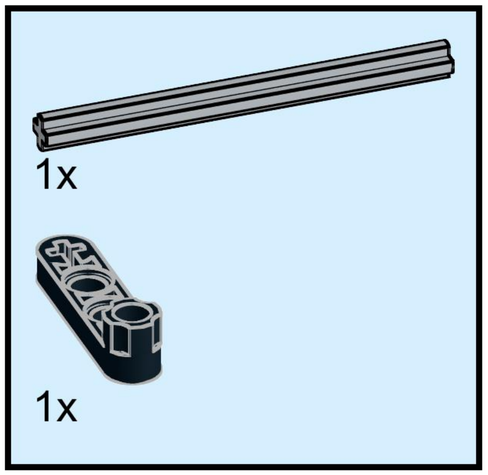

# 48

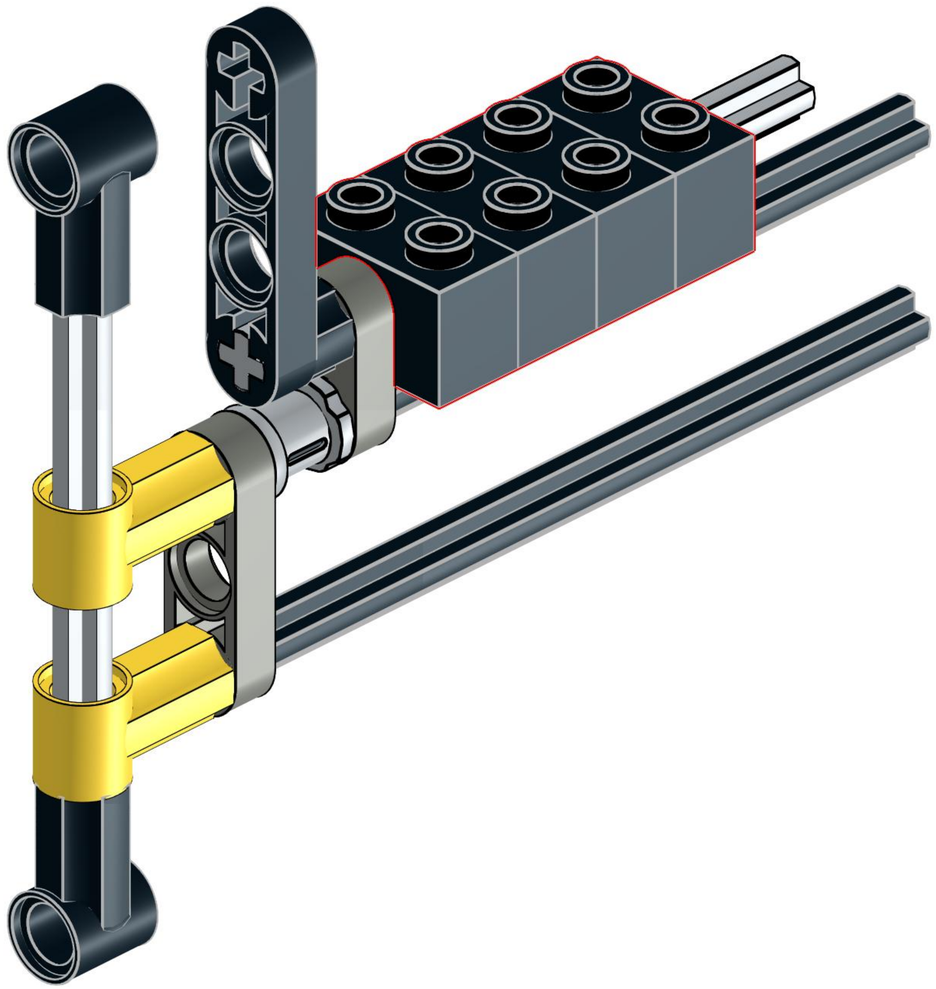

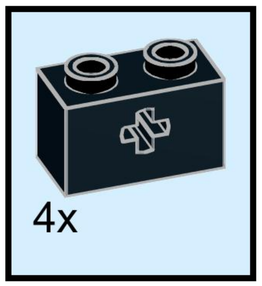

# 49

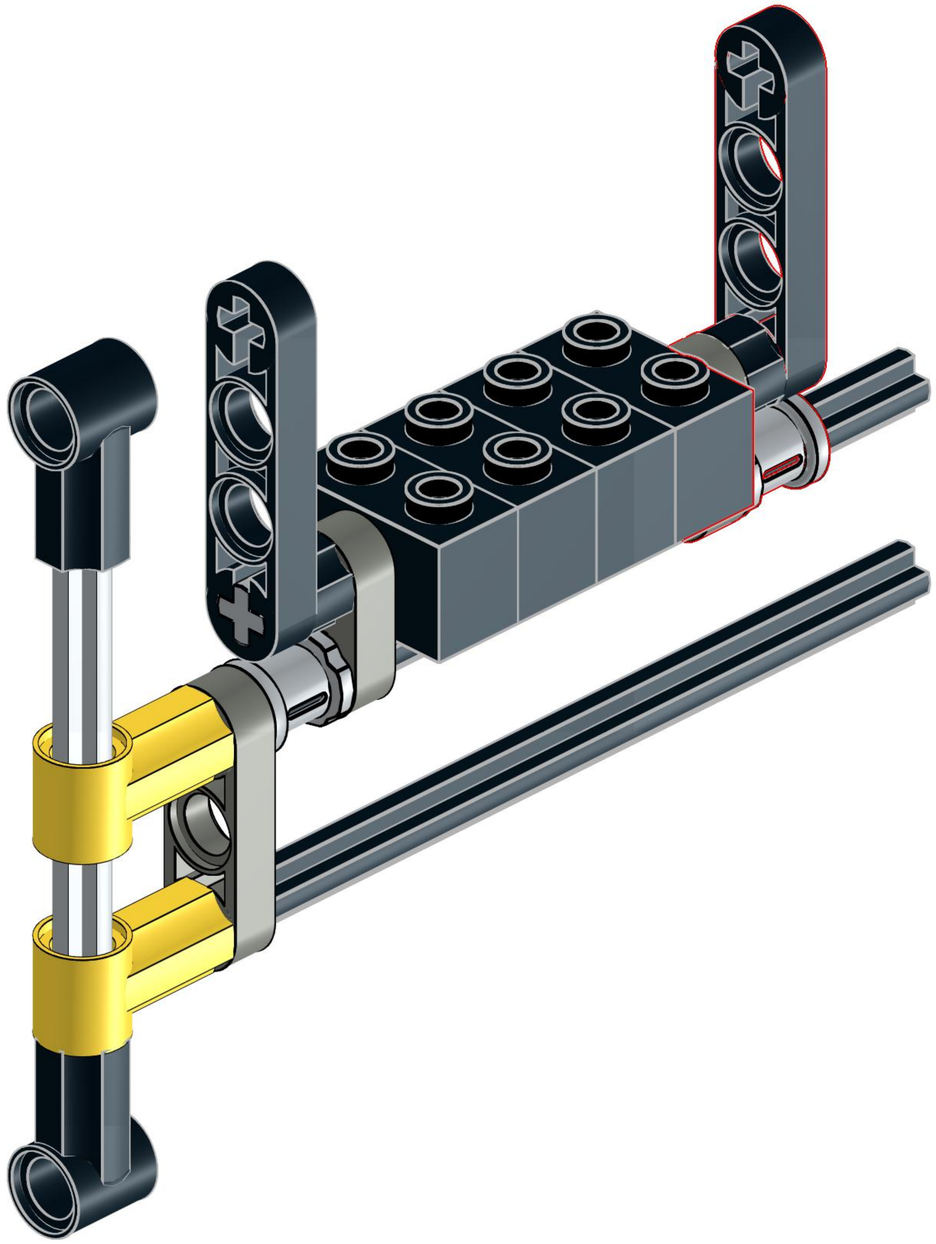

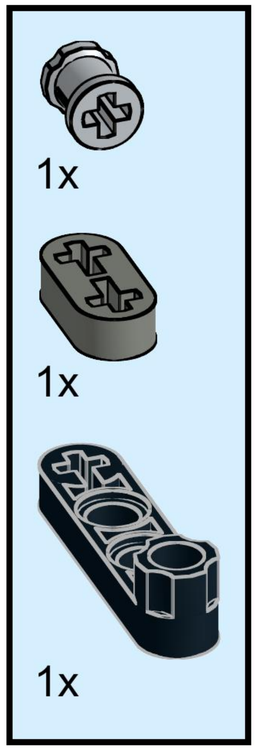

# 50

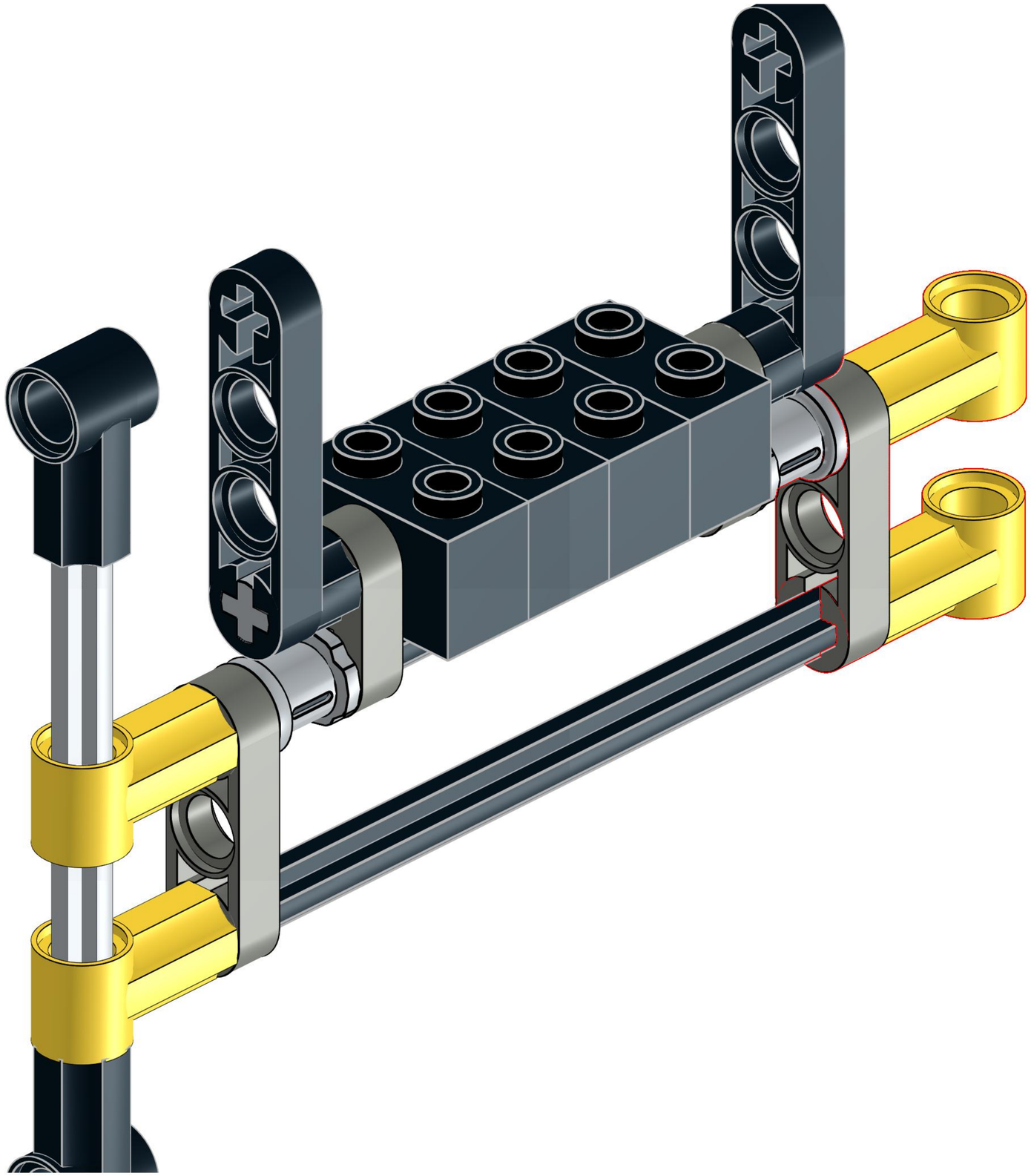

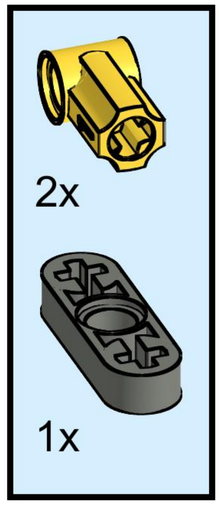

# 51

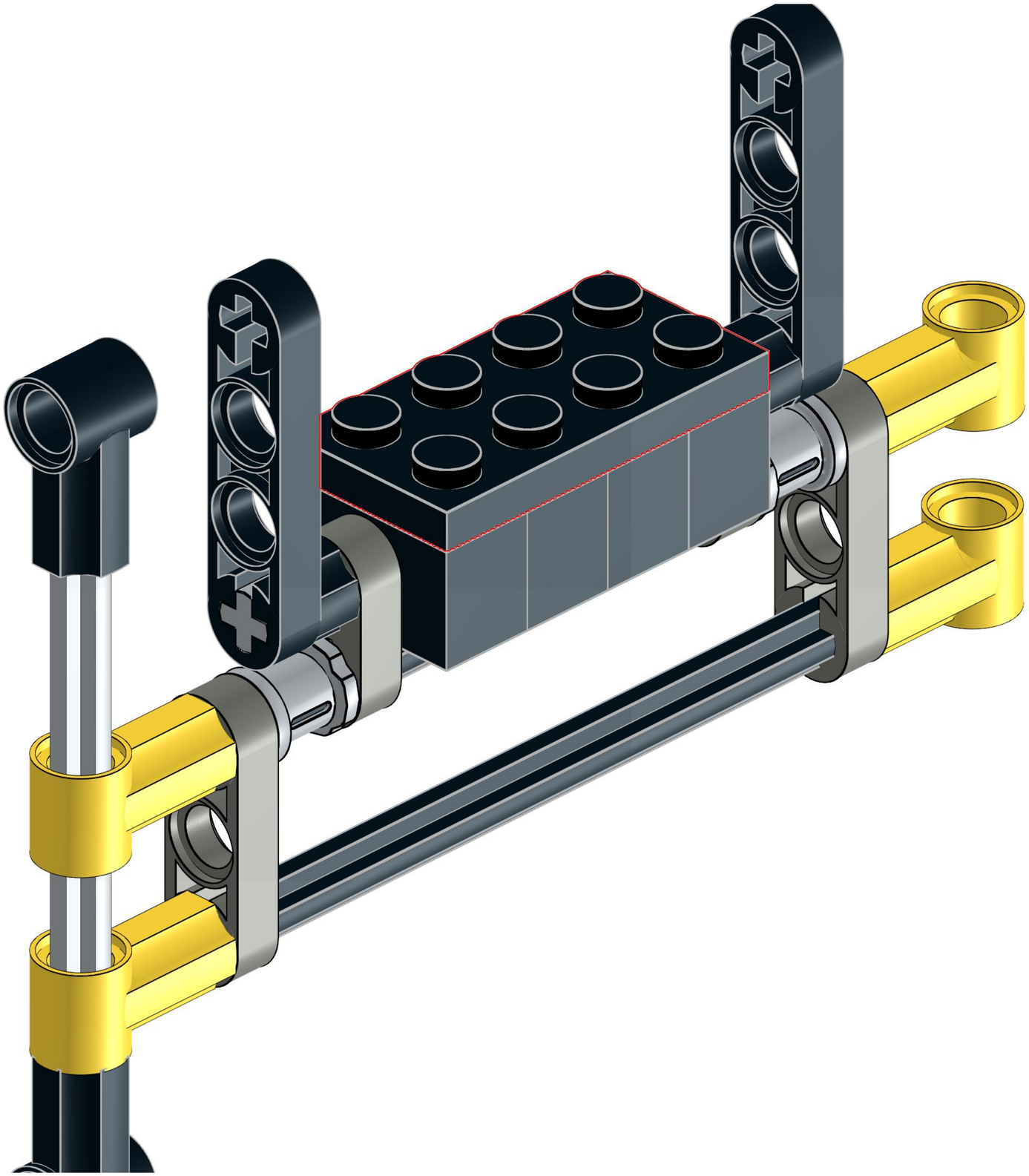

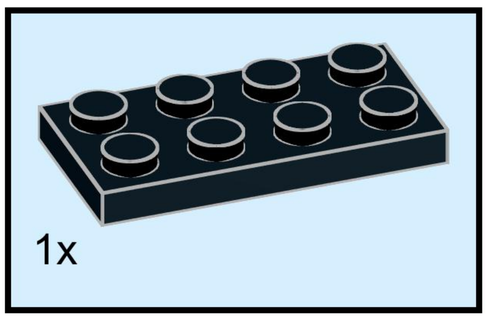

# 52

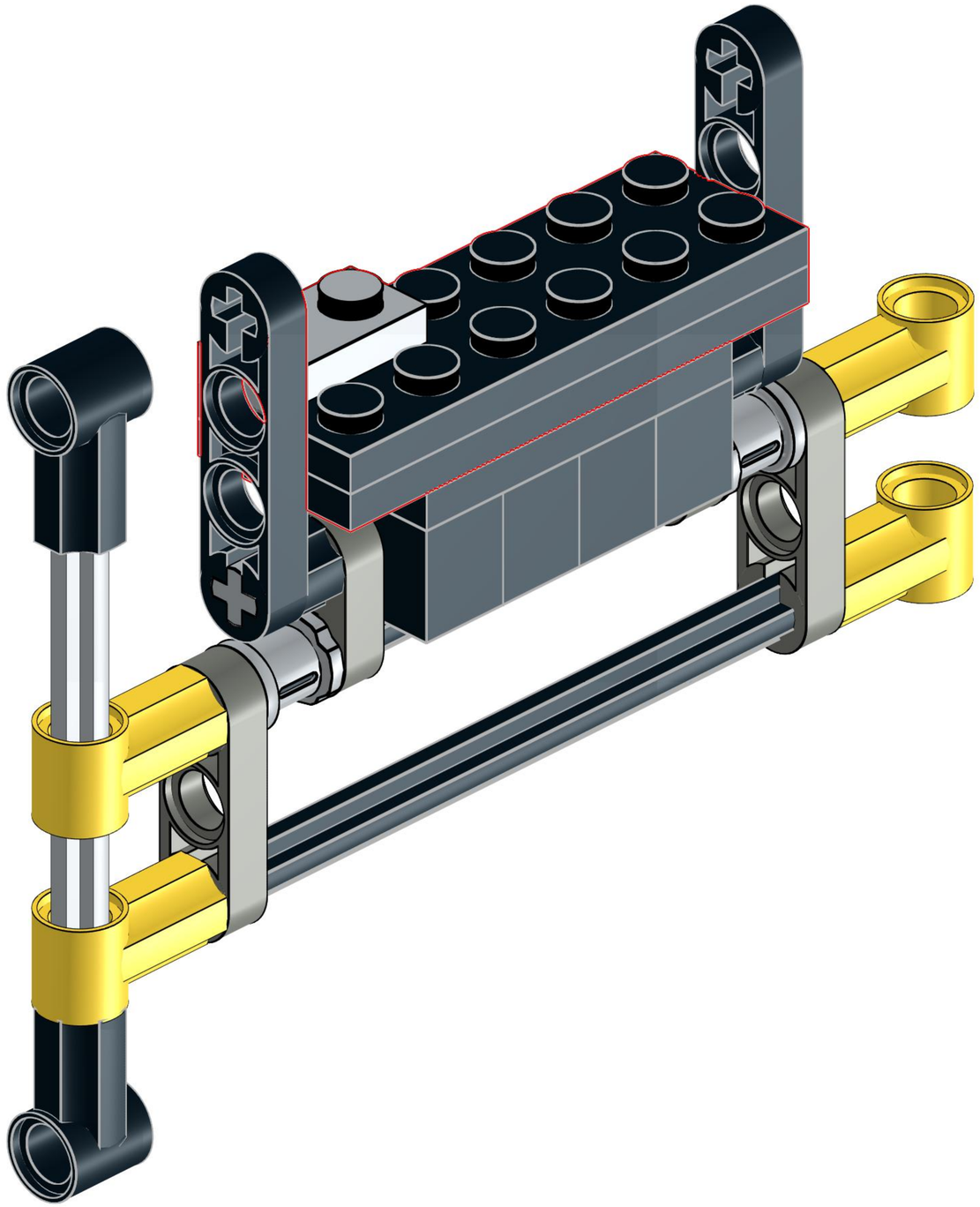

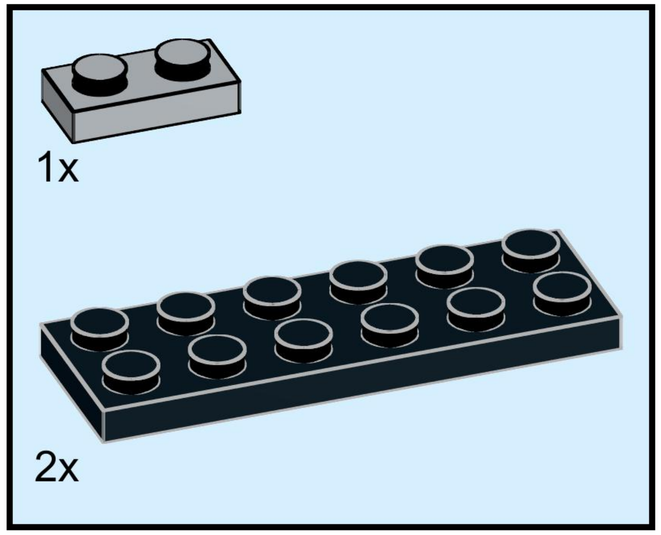

# 53

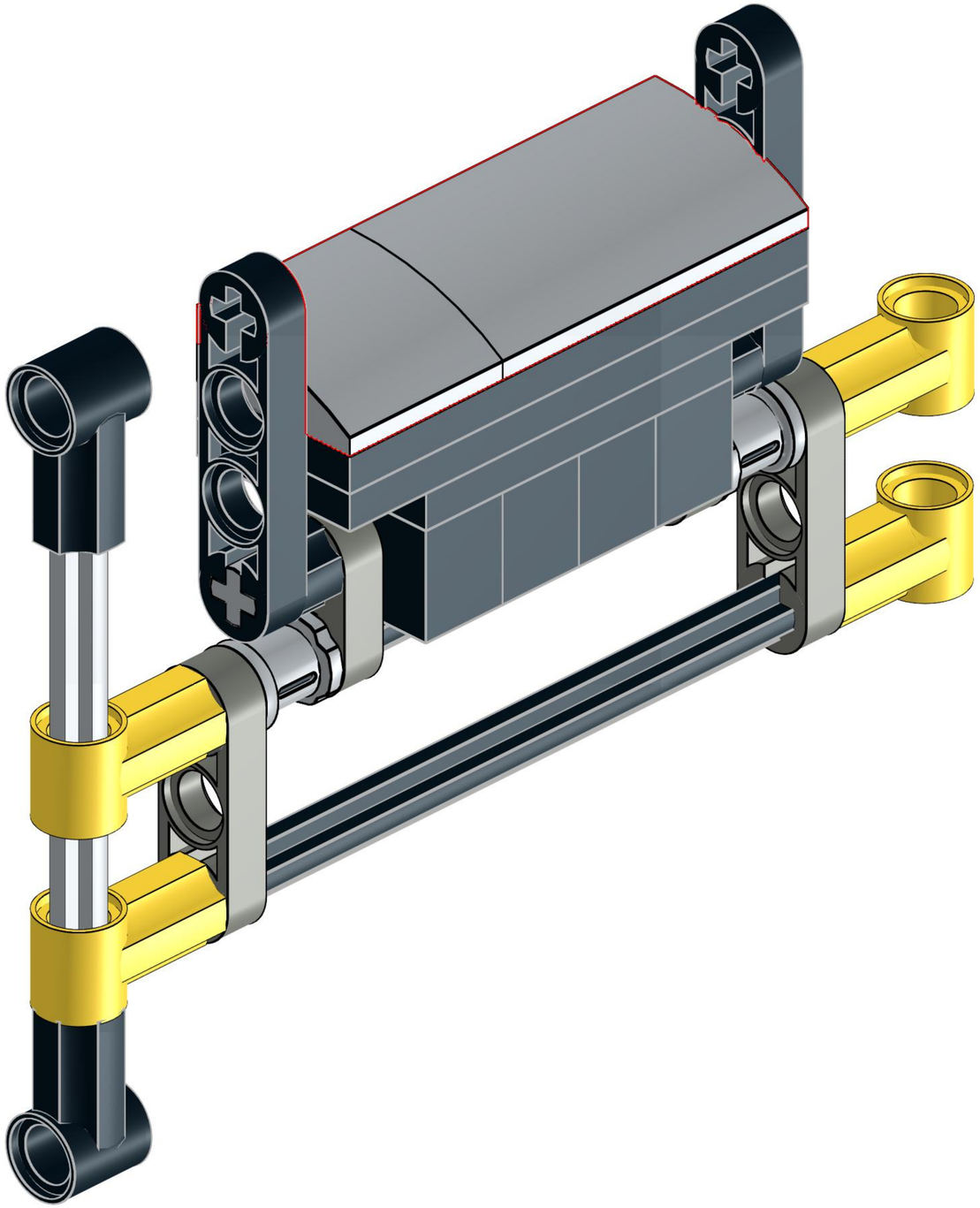

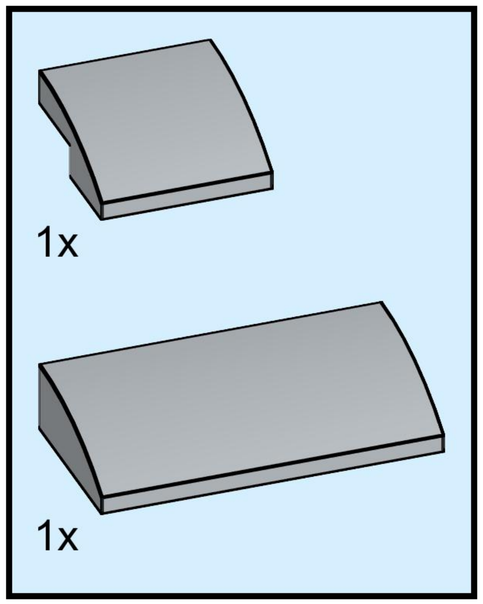

# 54

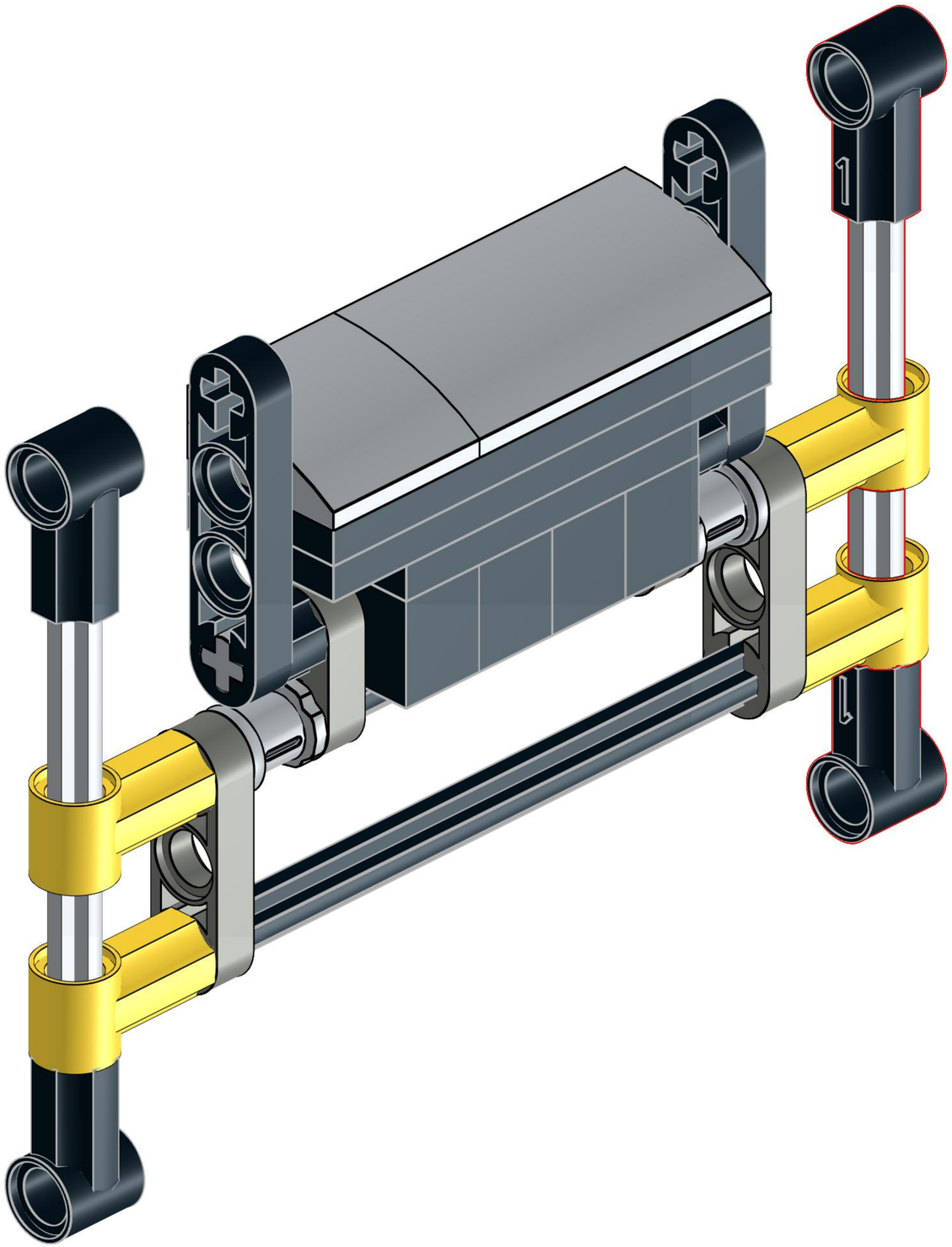

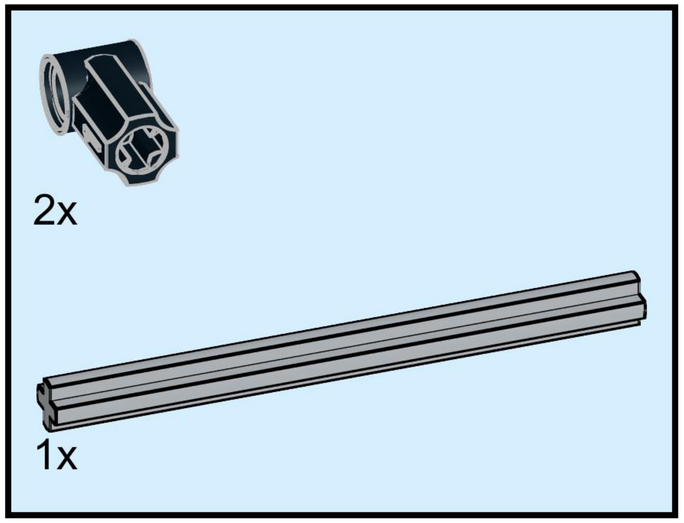

# 55

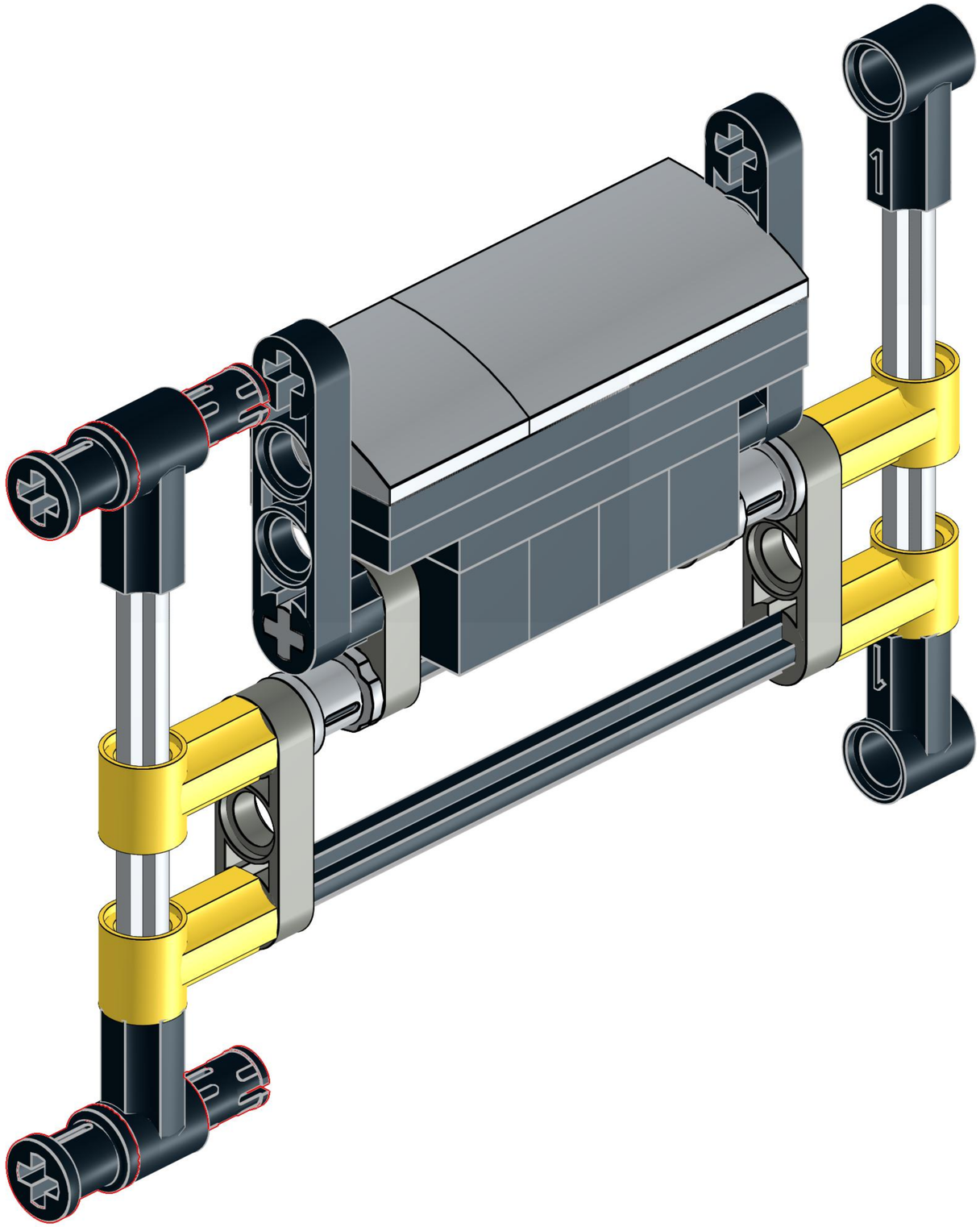

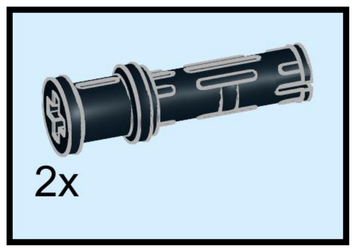

# 56

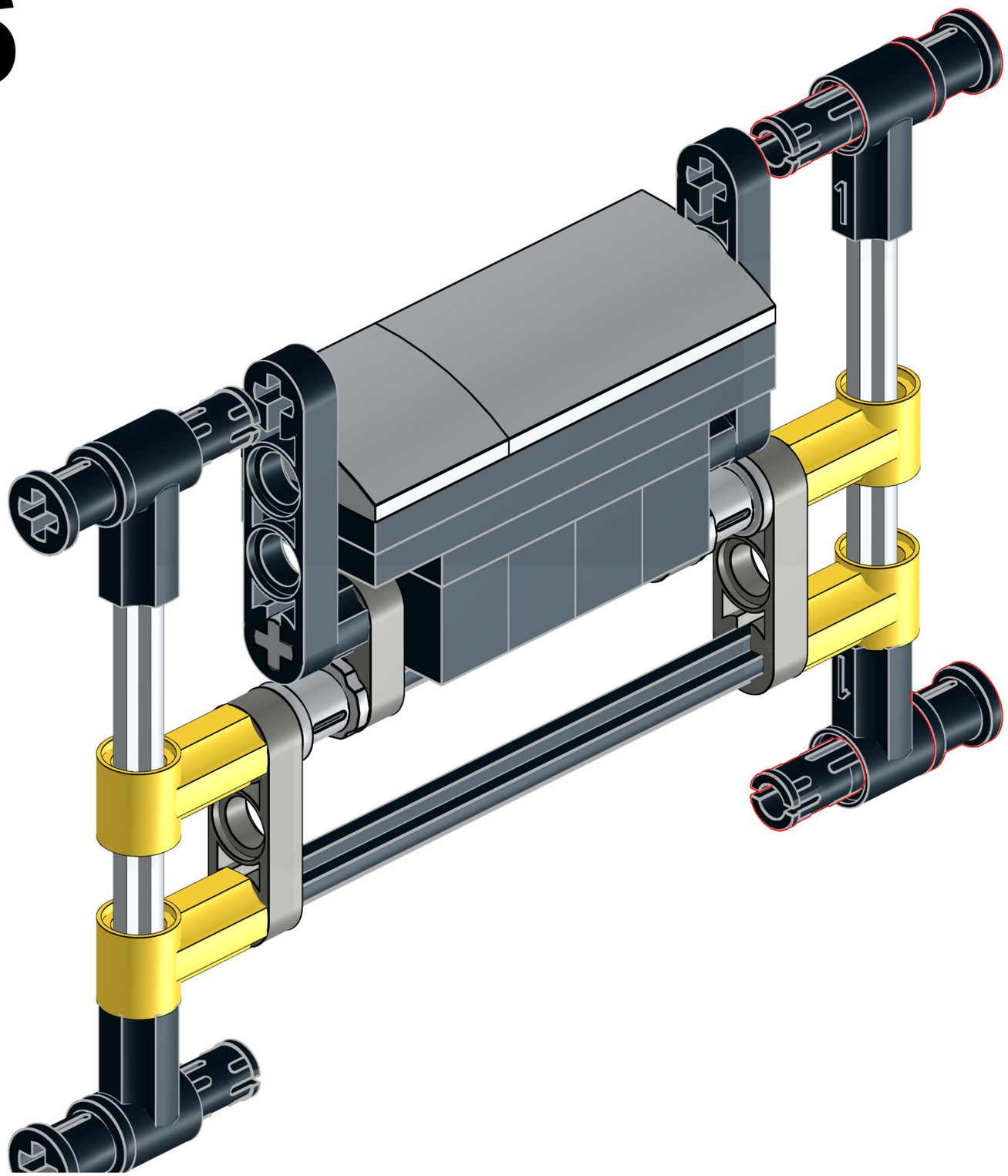

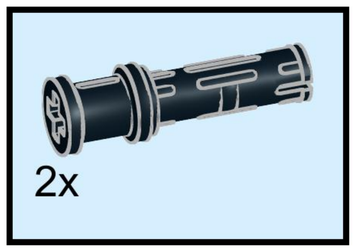

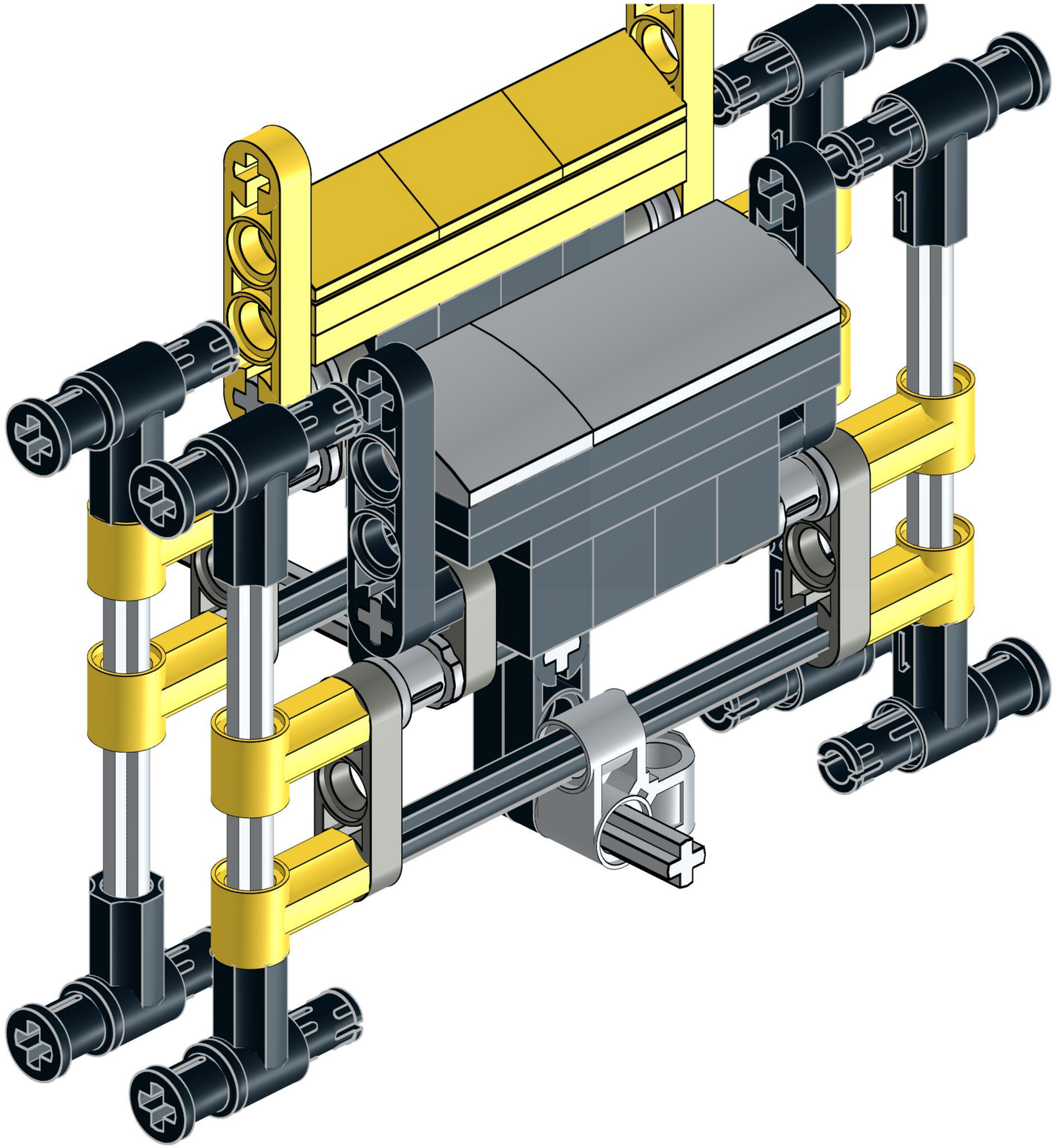

# 58

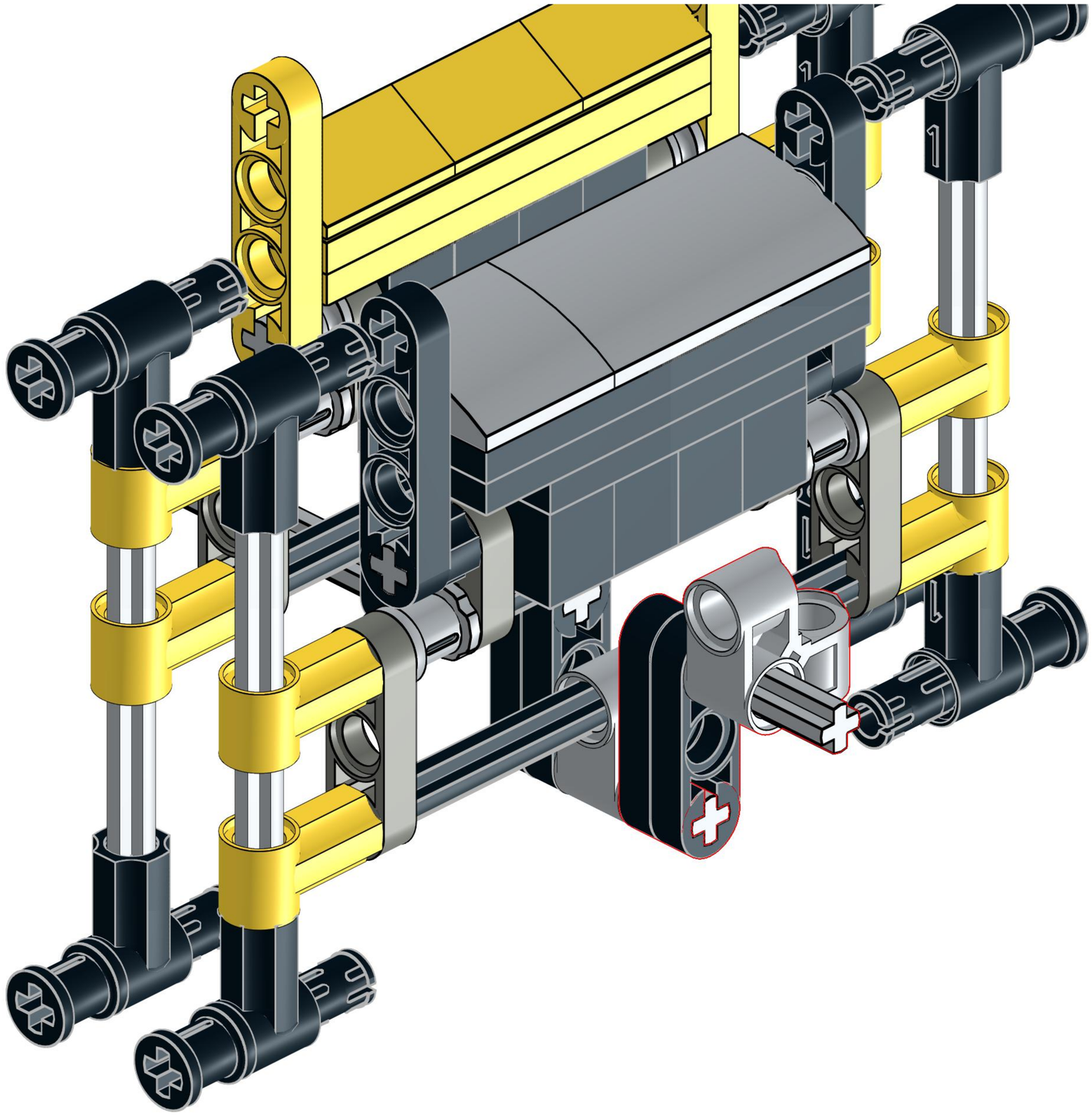

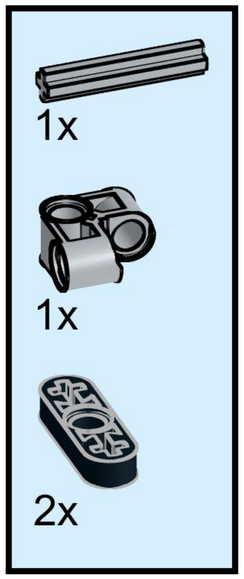

# 59

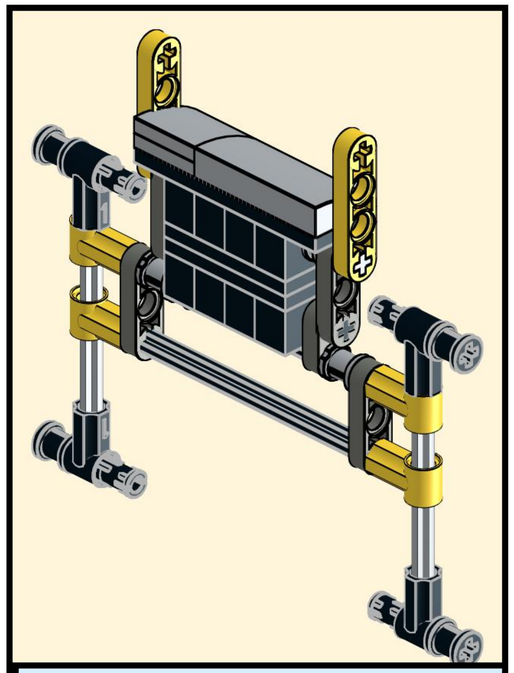

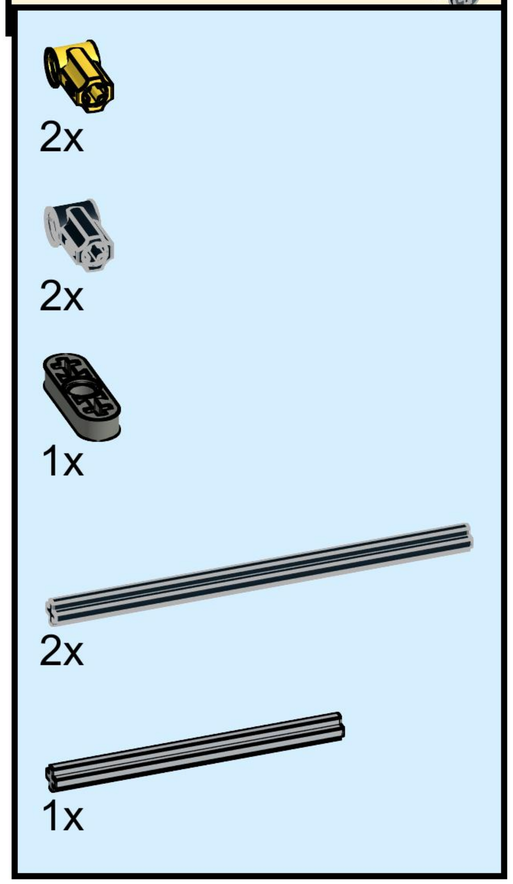

# 60

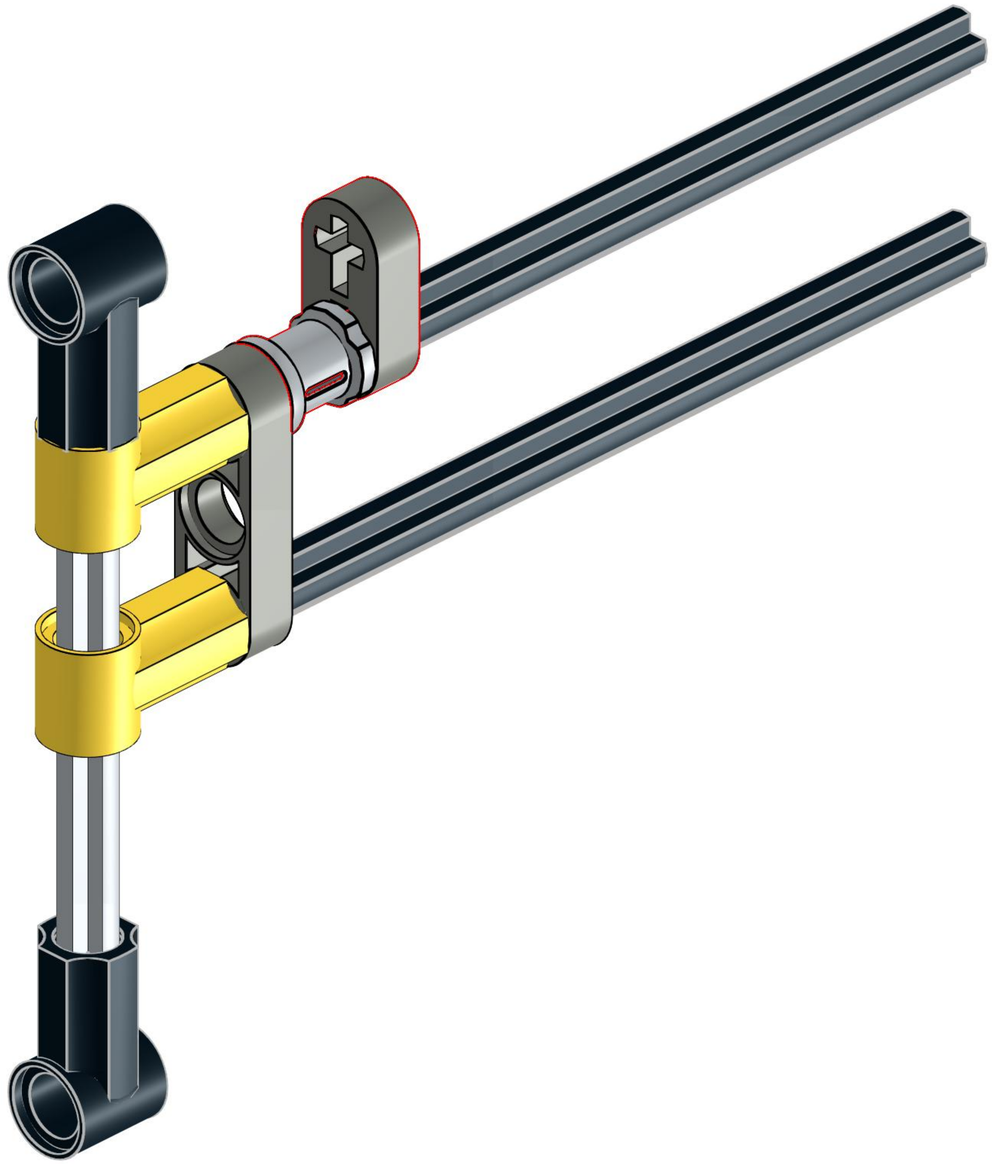

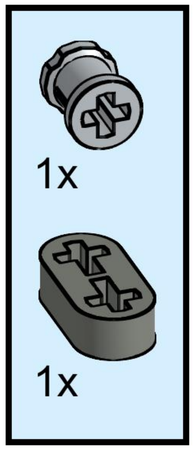

# 61

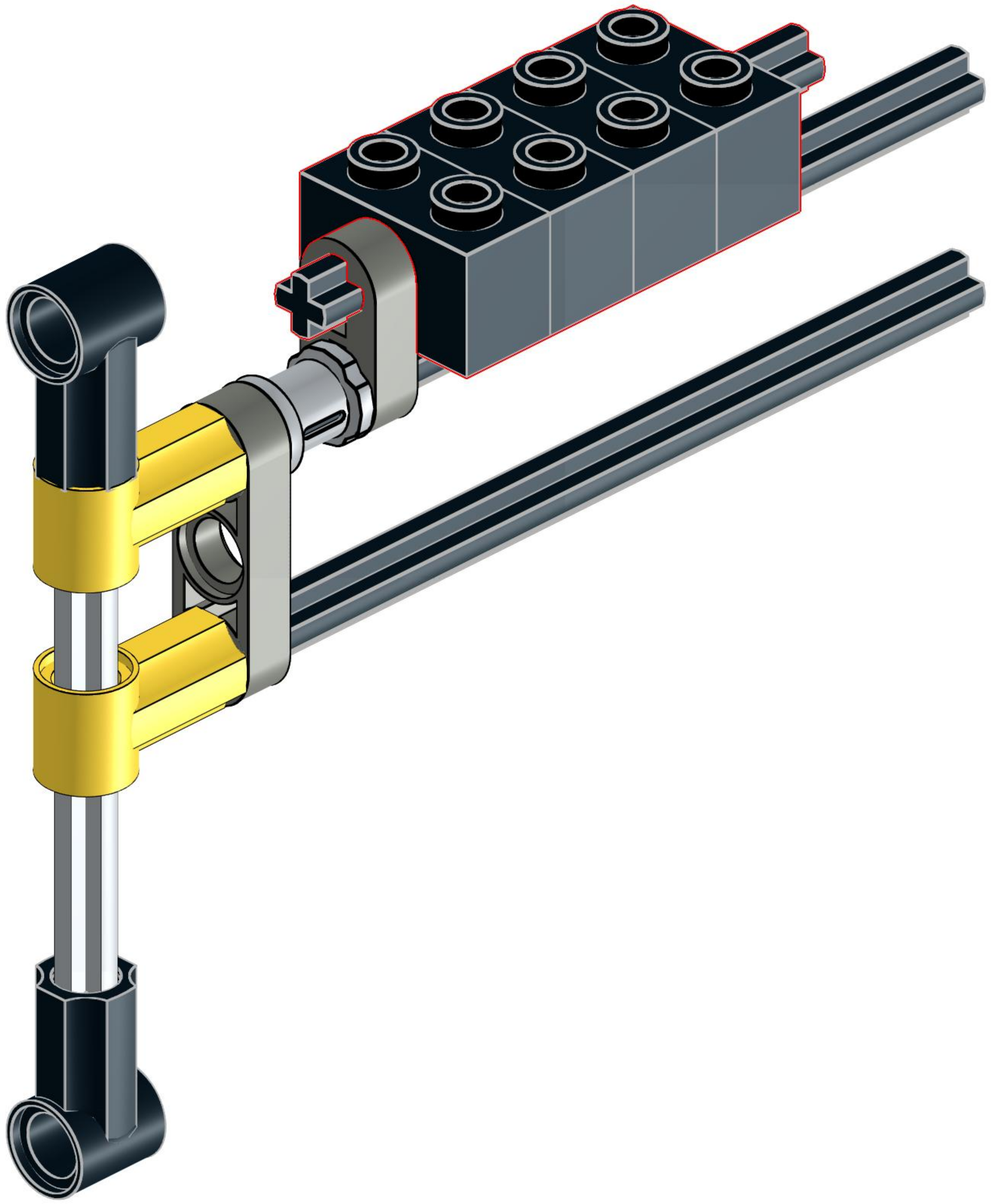

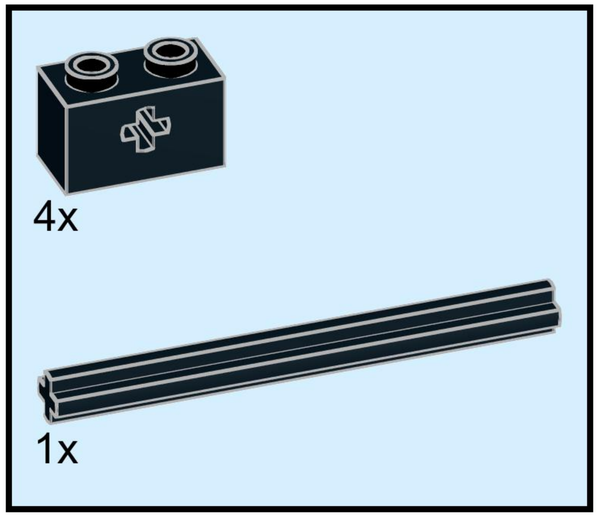

# 62

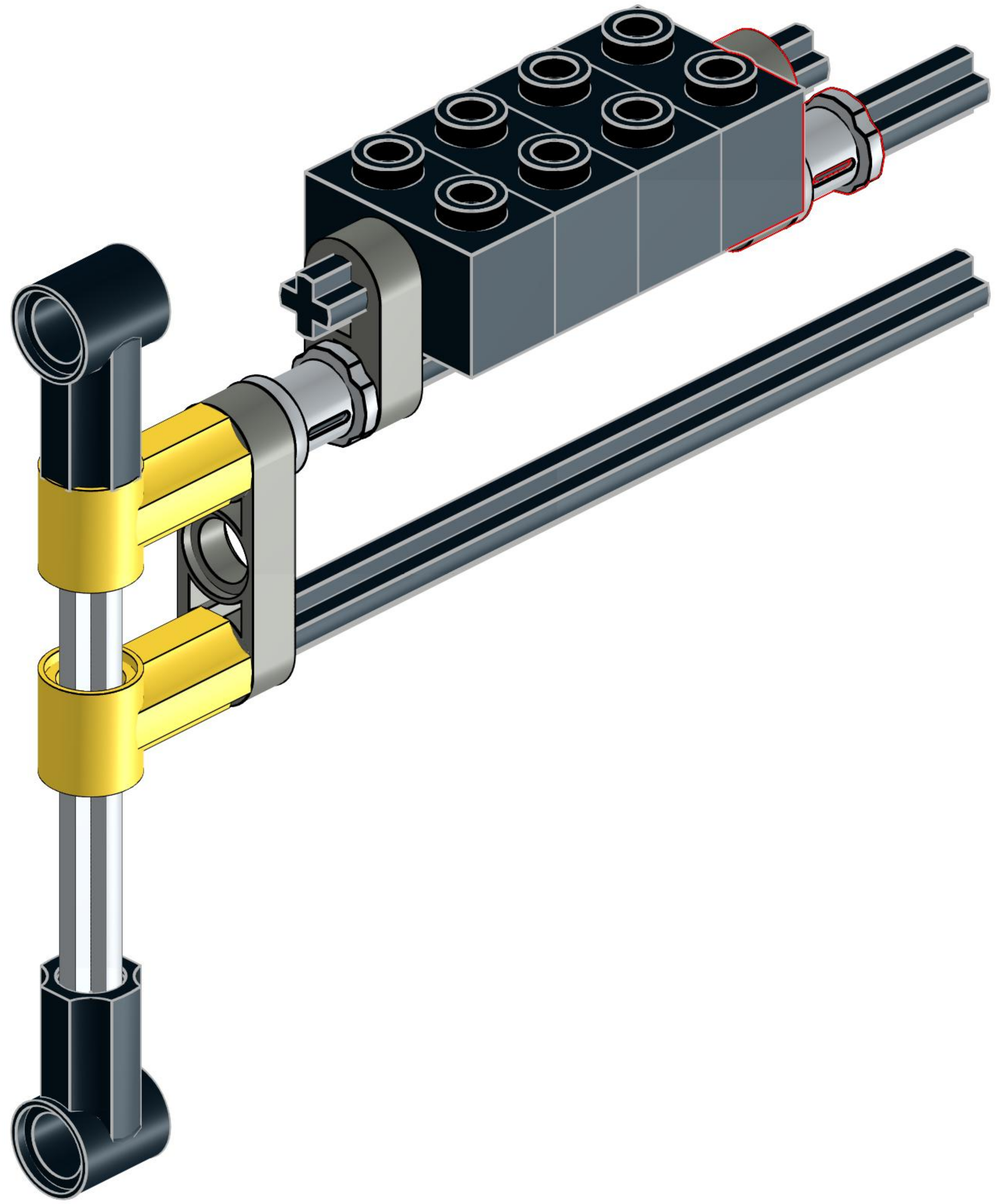

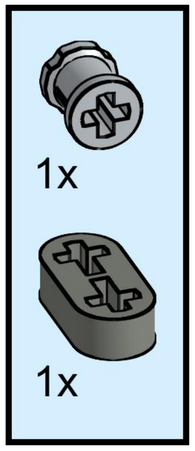

# 63

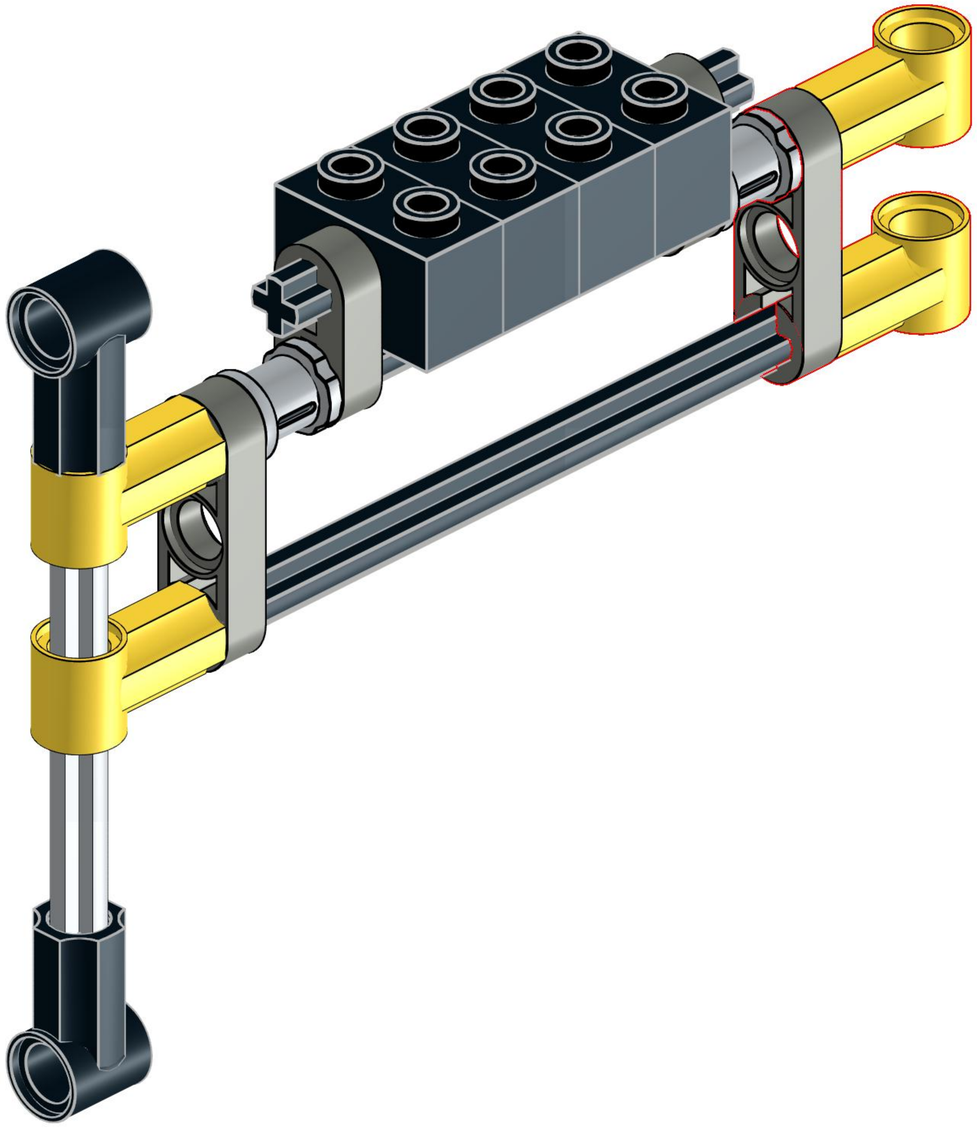

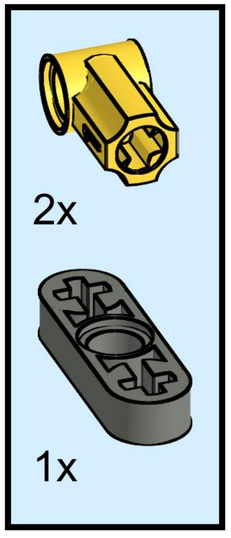

# 64

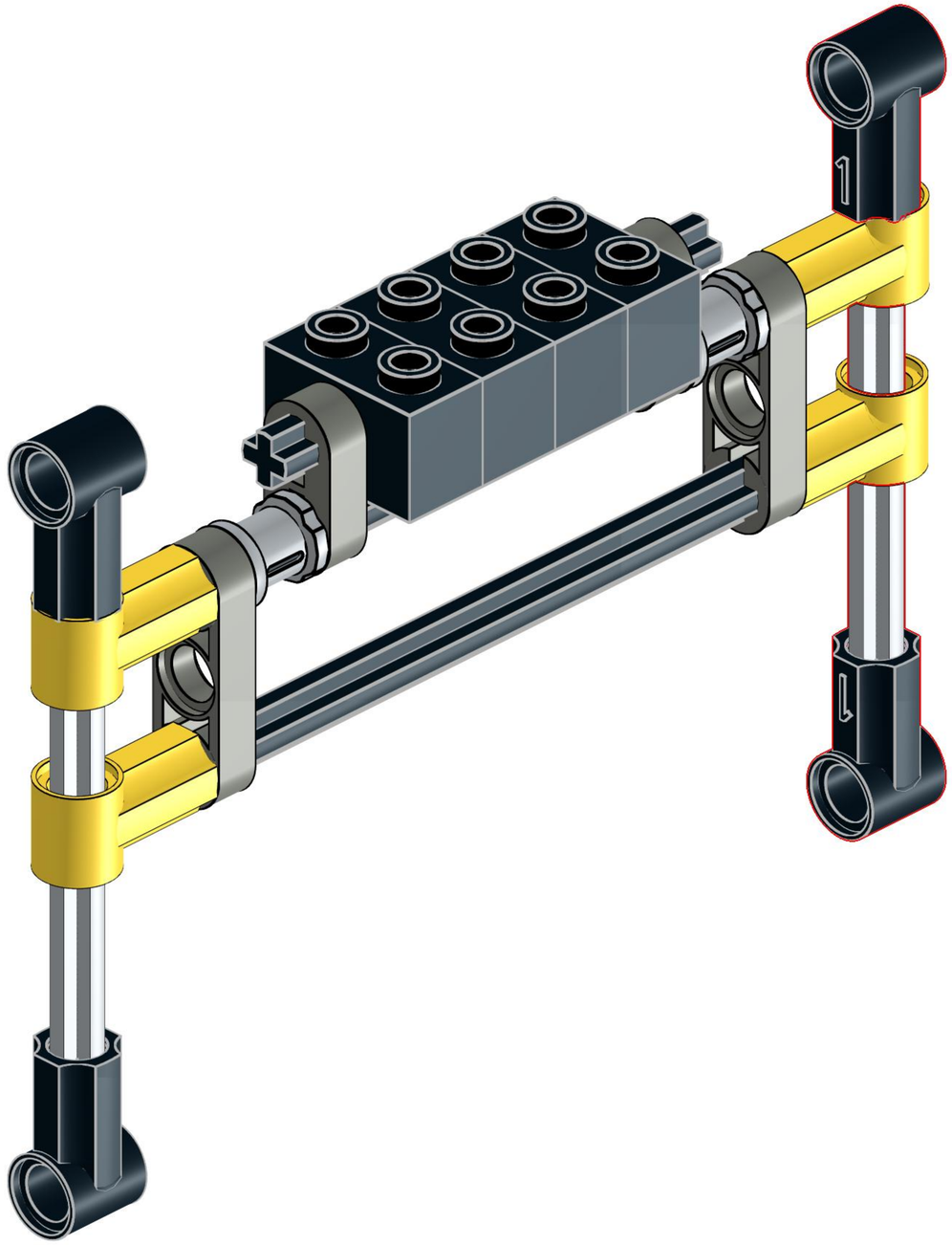

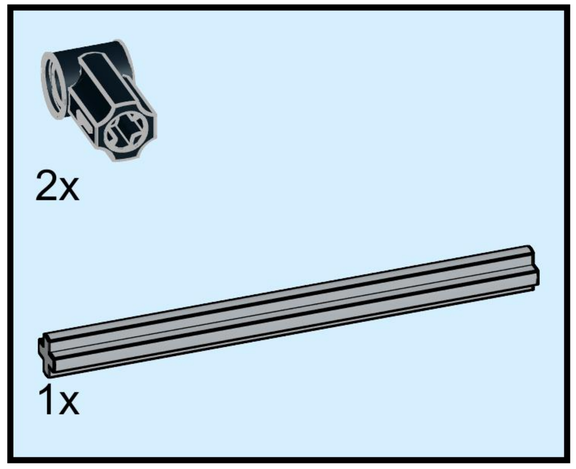

# 65

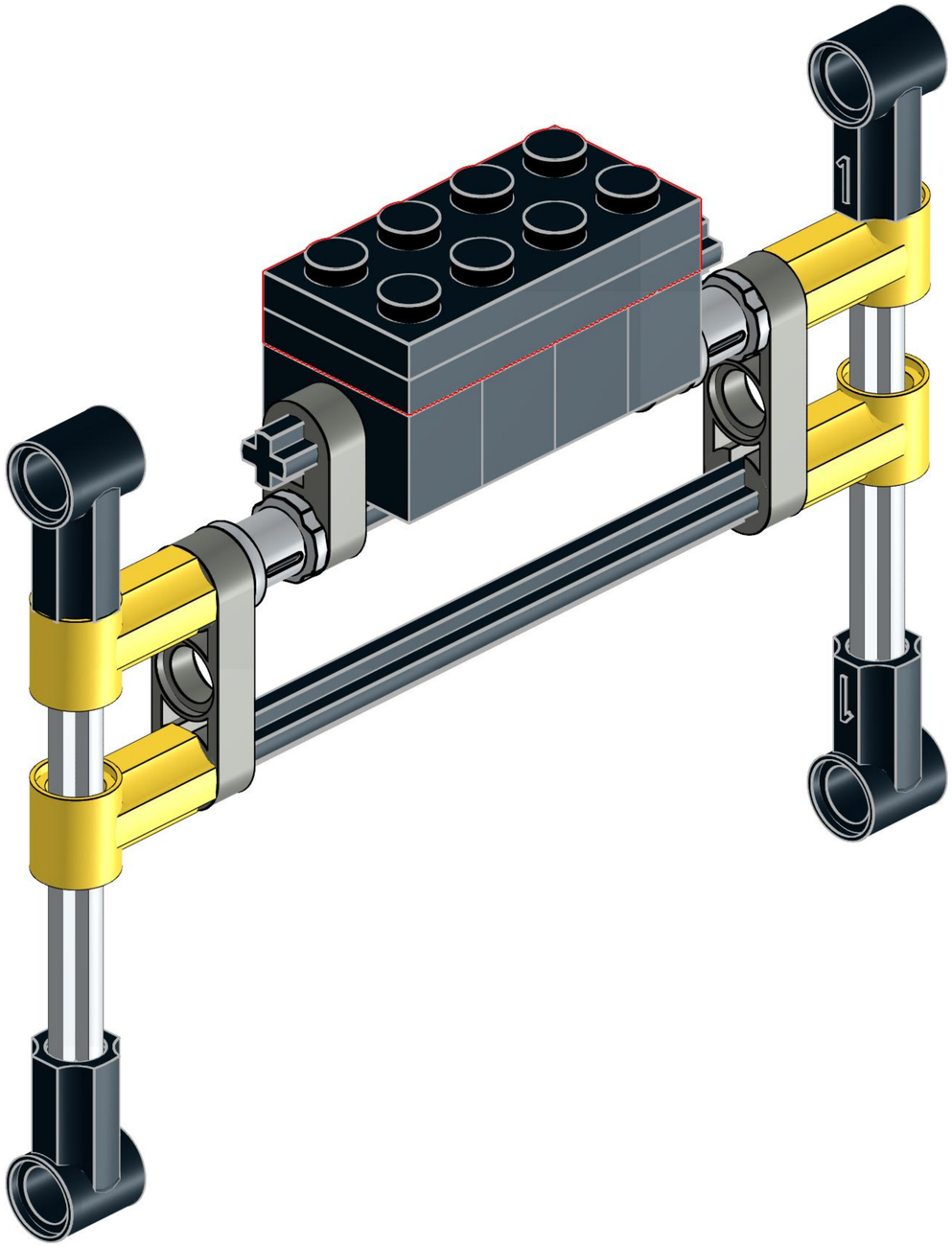

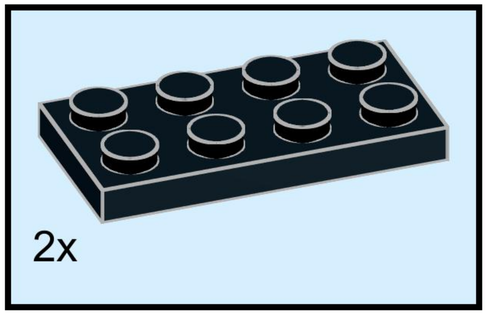

# 66

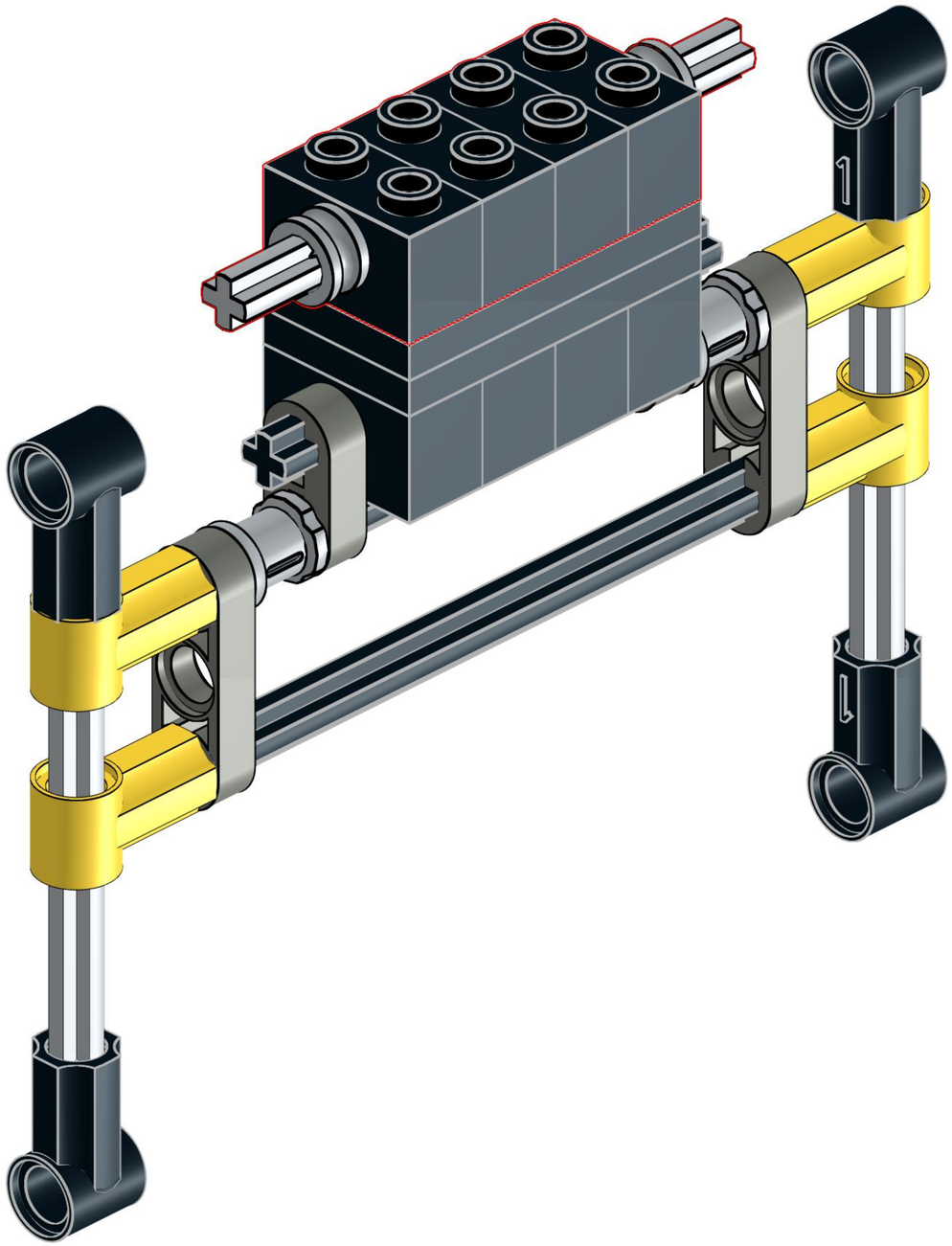

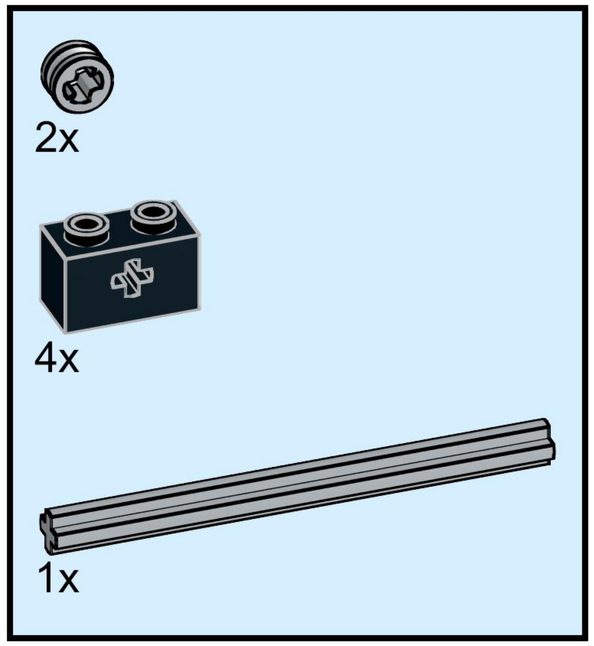

# 67

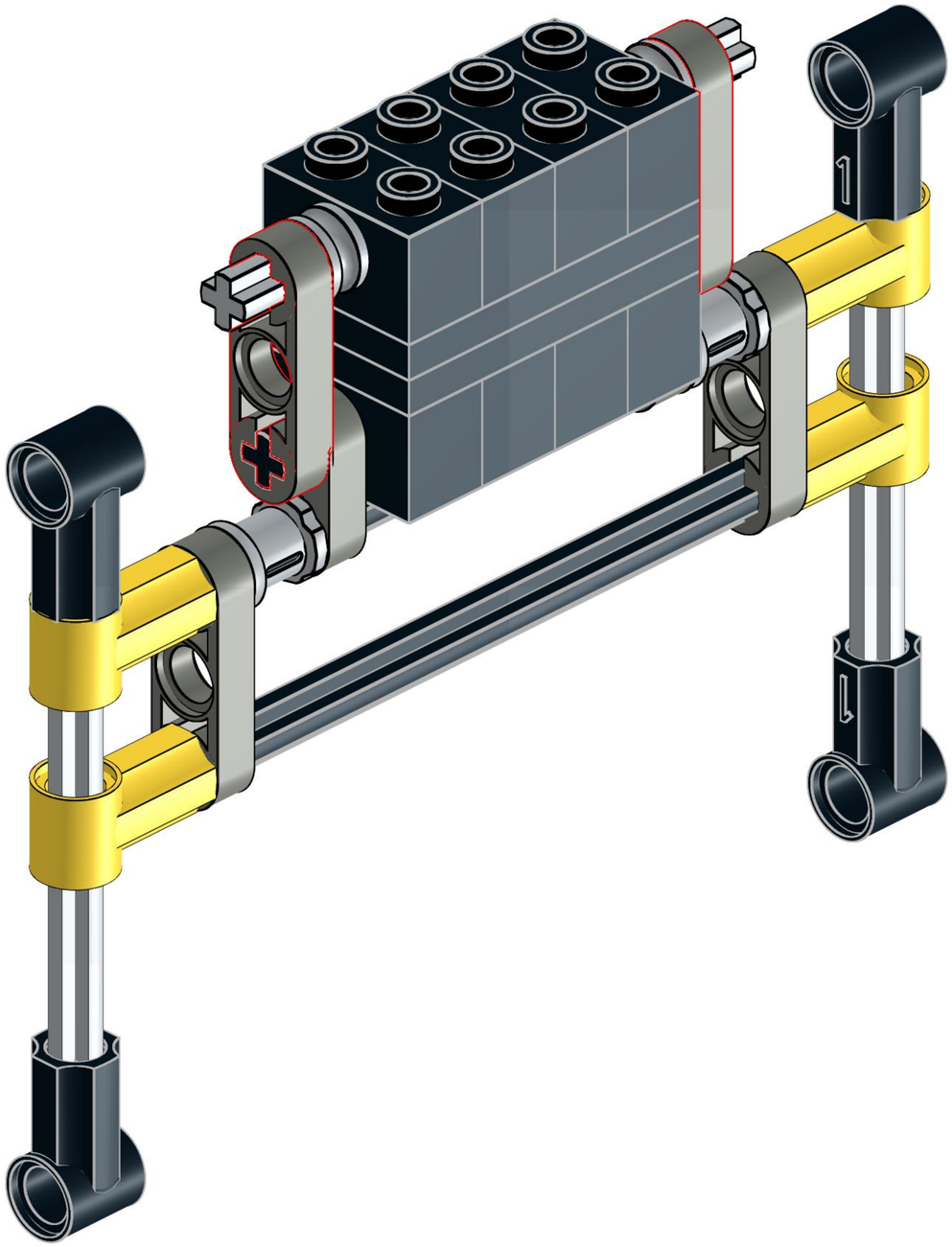

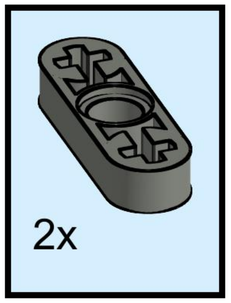

# 68

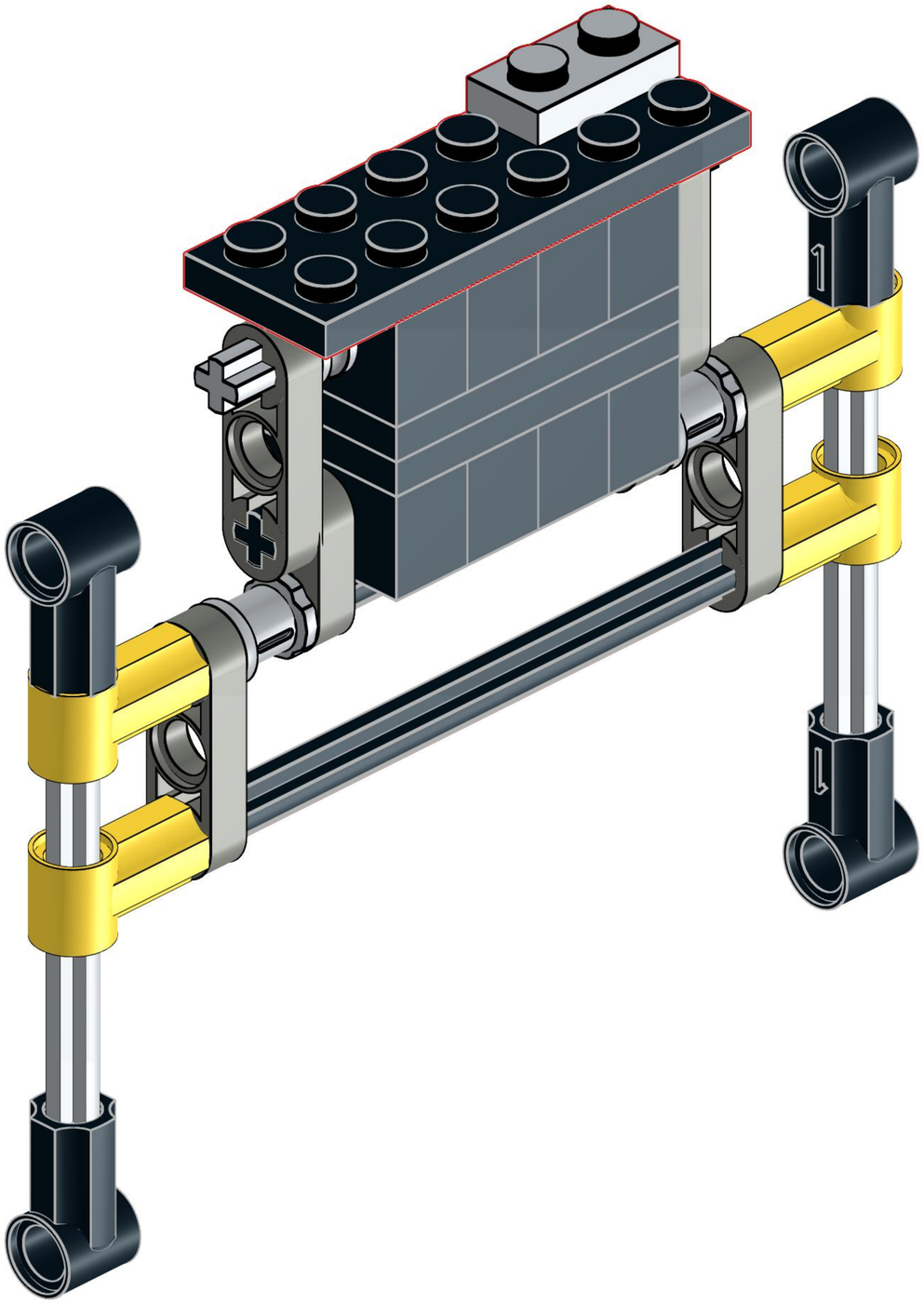

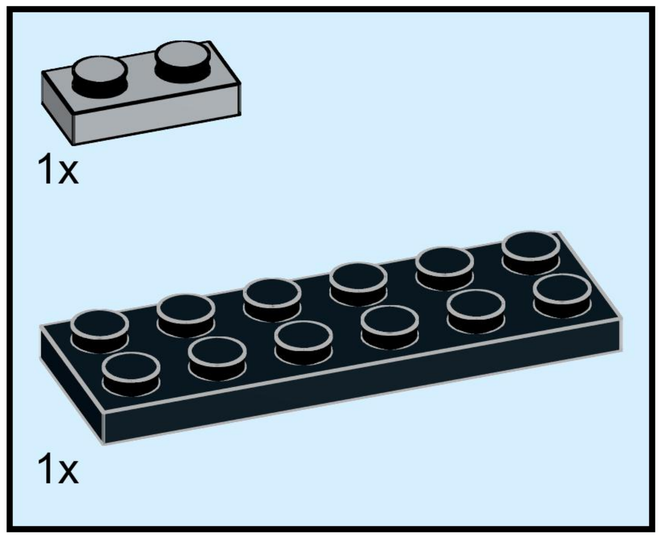

# 69

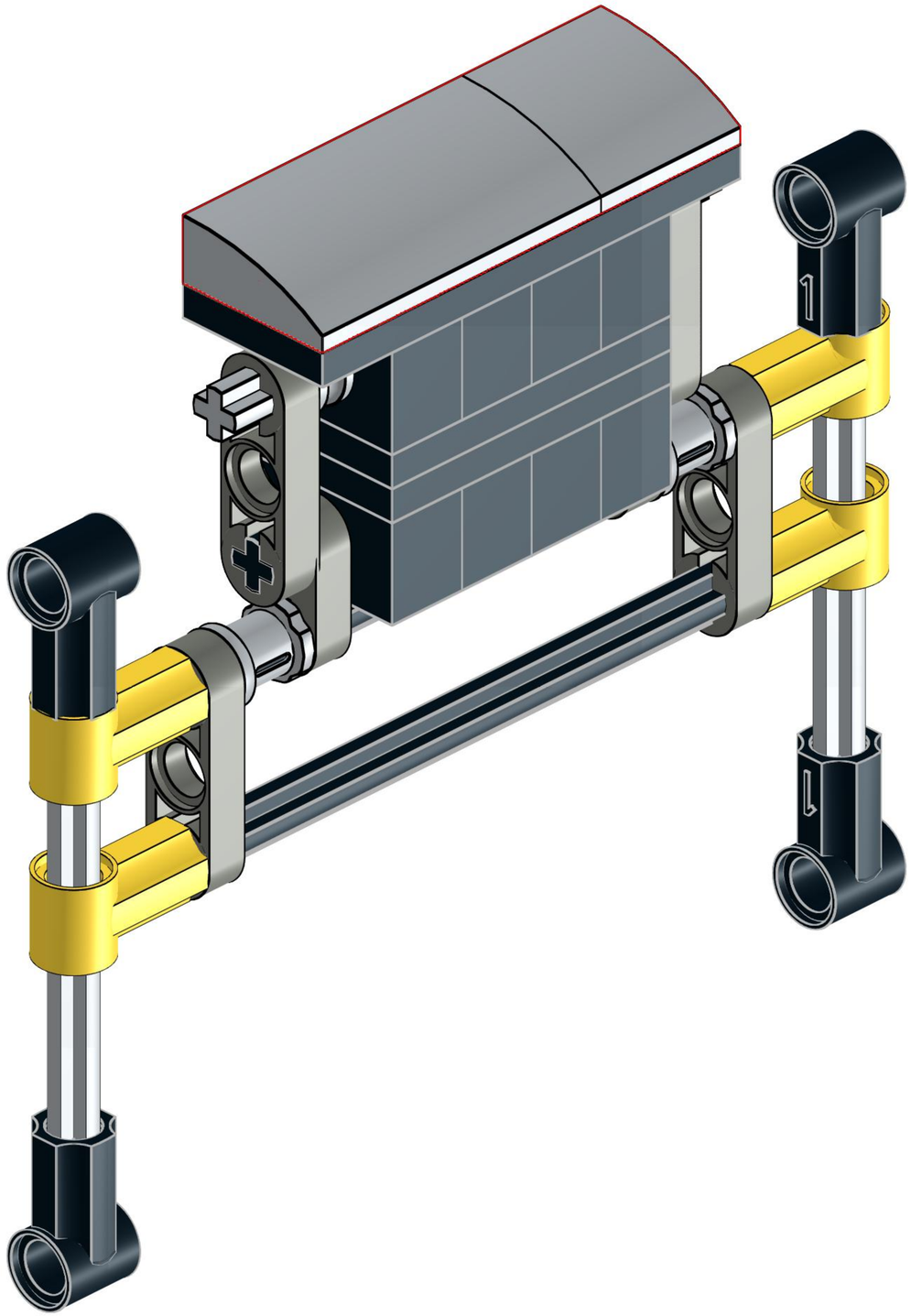

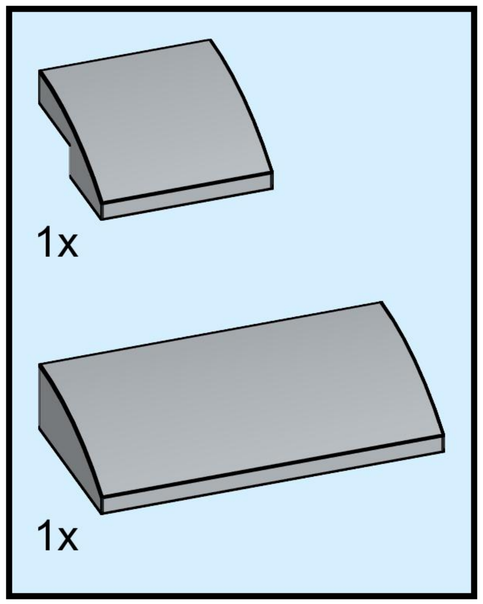

# 70

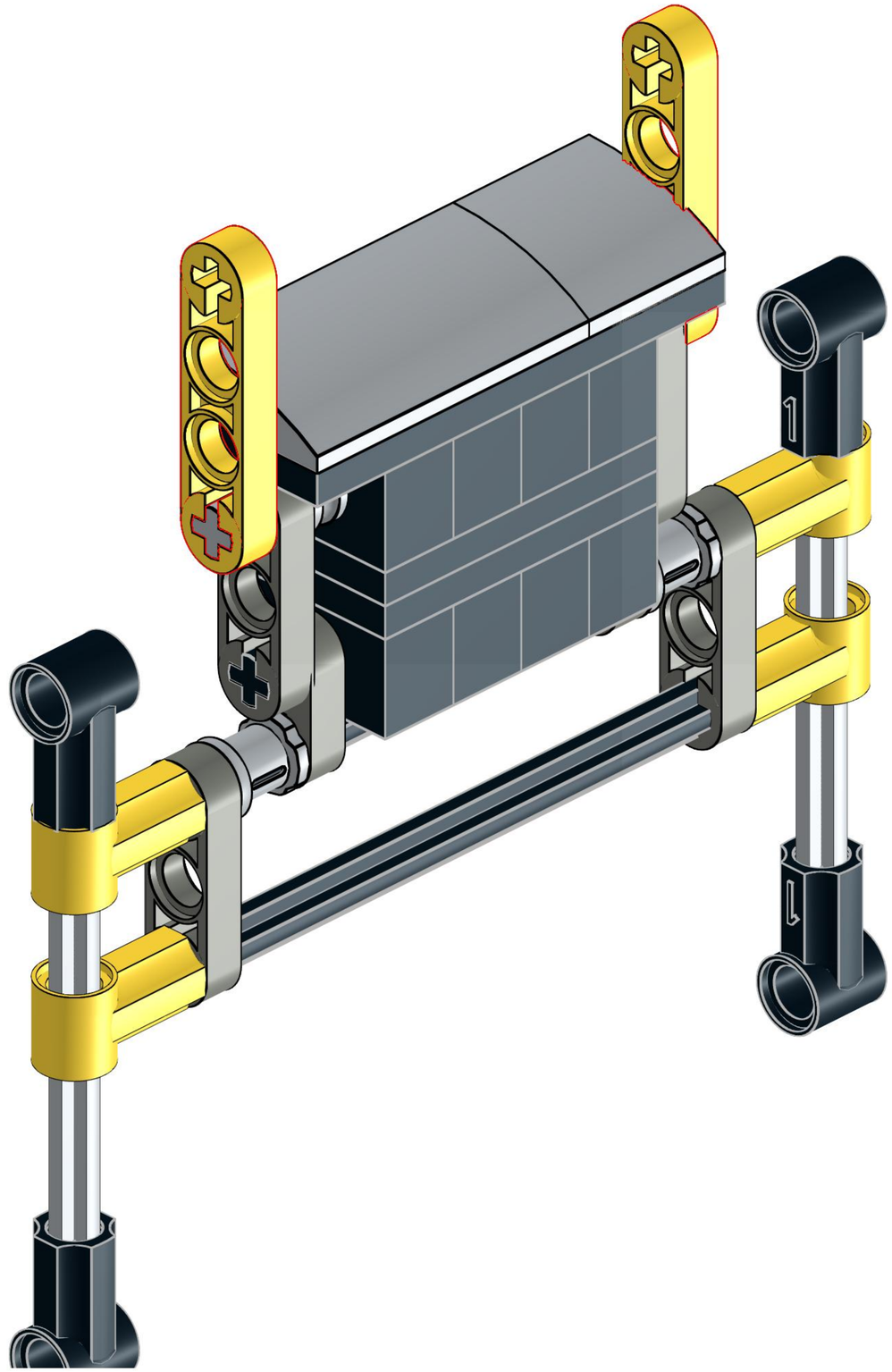

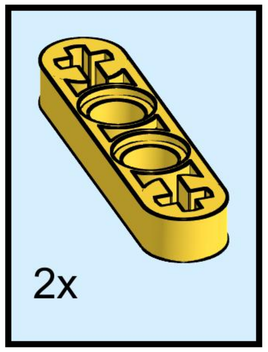

# 71

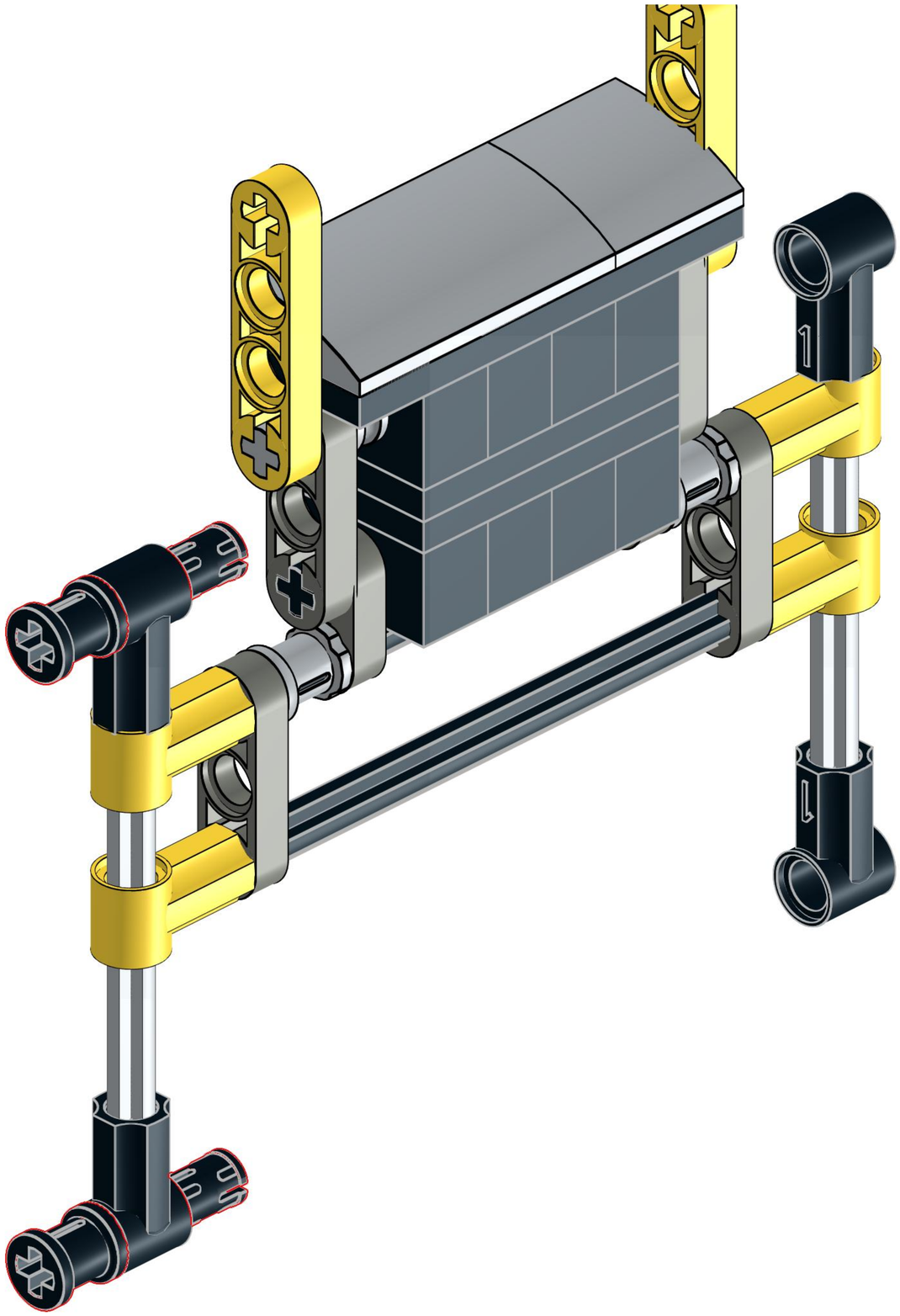

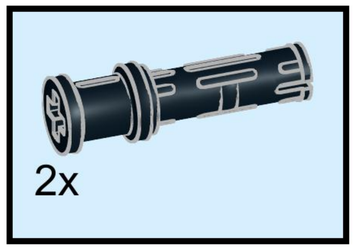

# 72

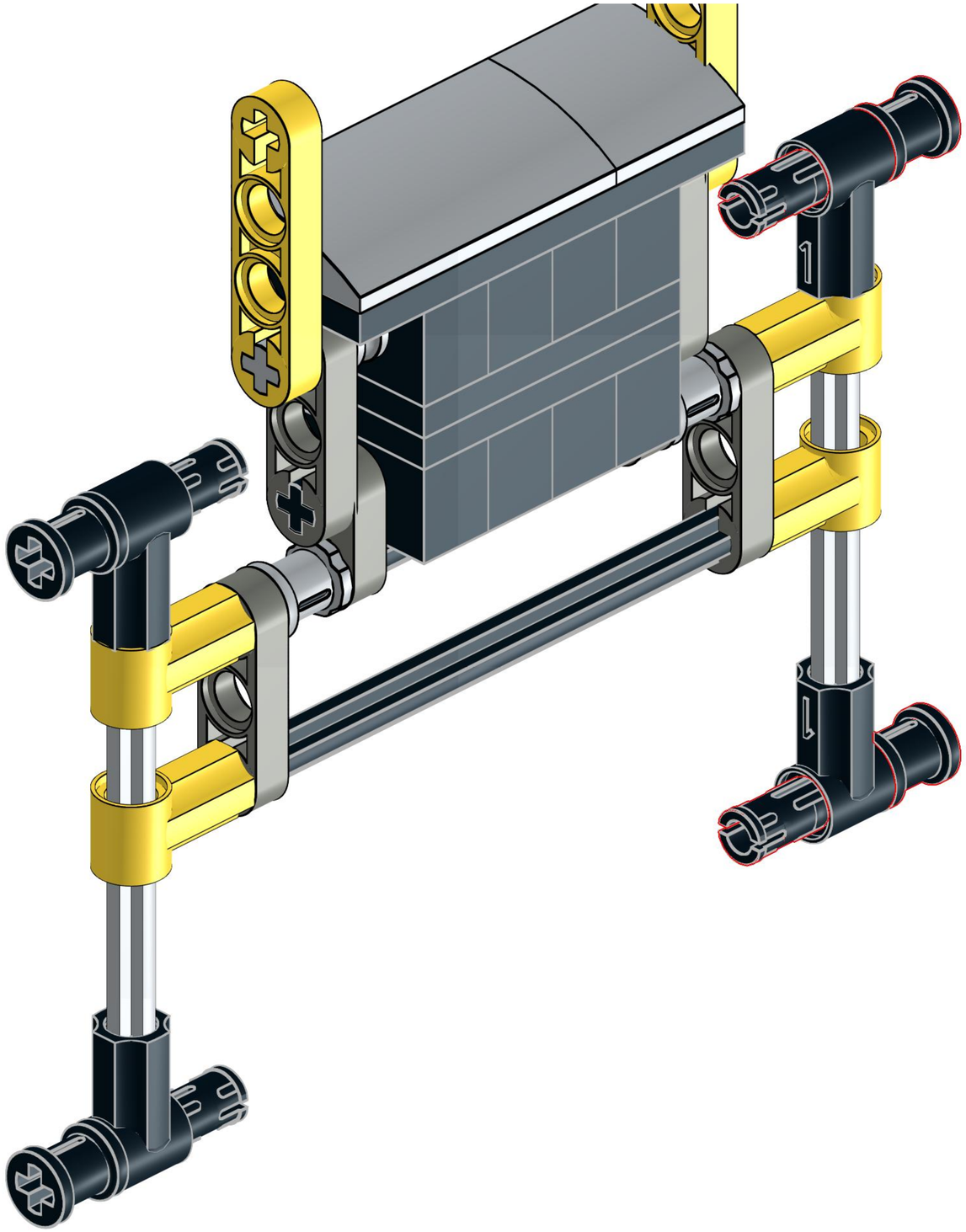

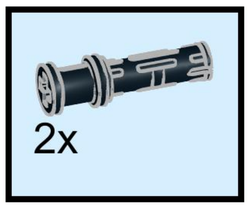

# 73

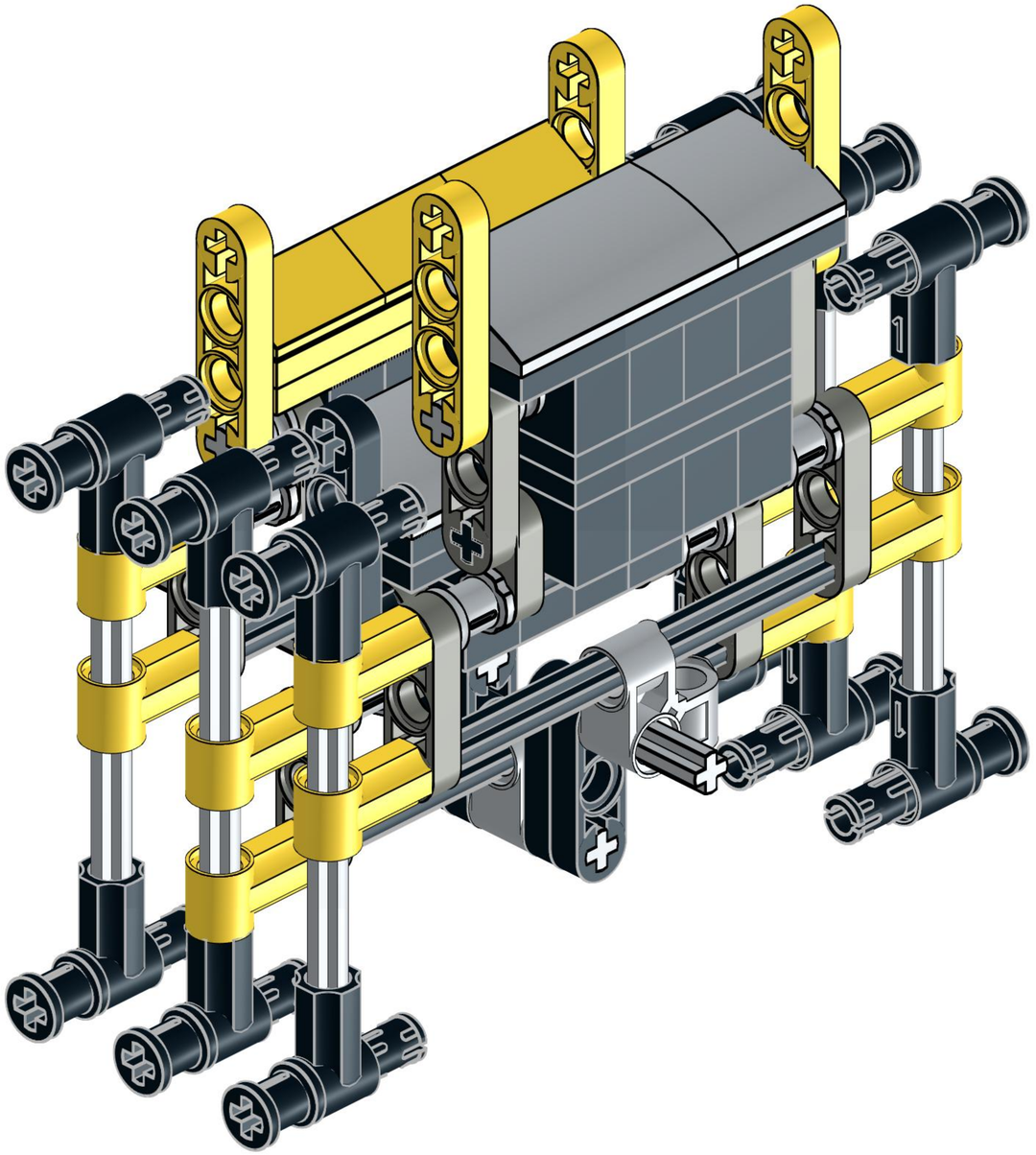

# 74

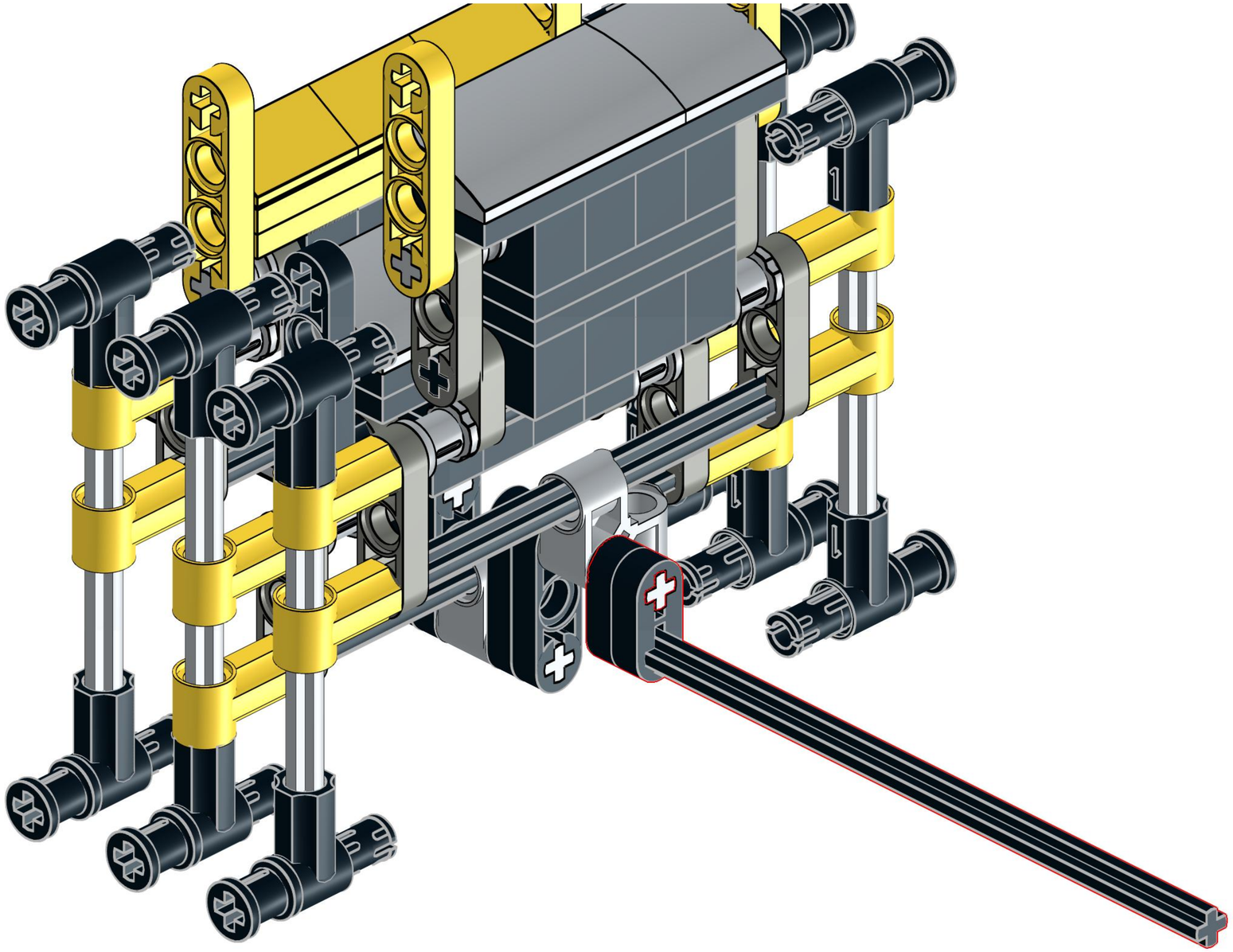

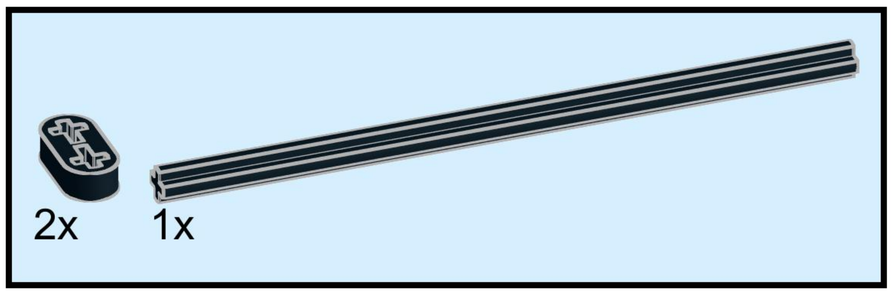

# 75

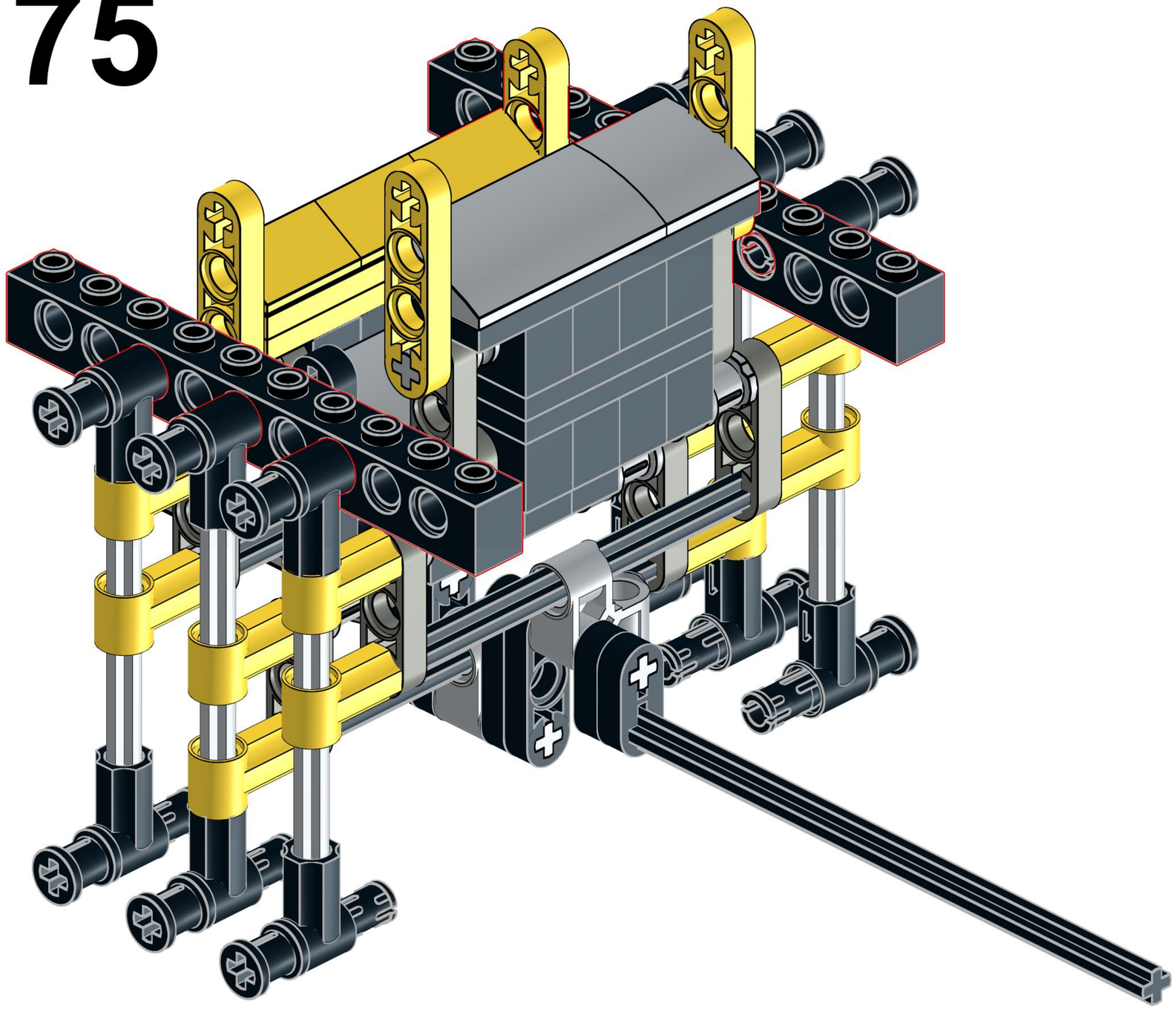

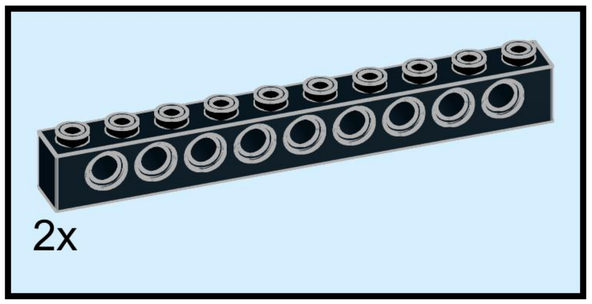

# 76

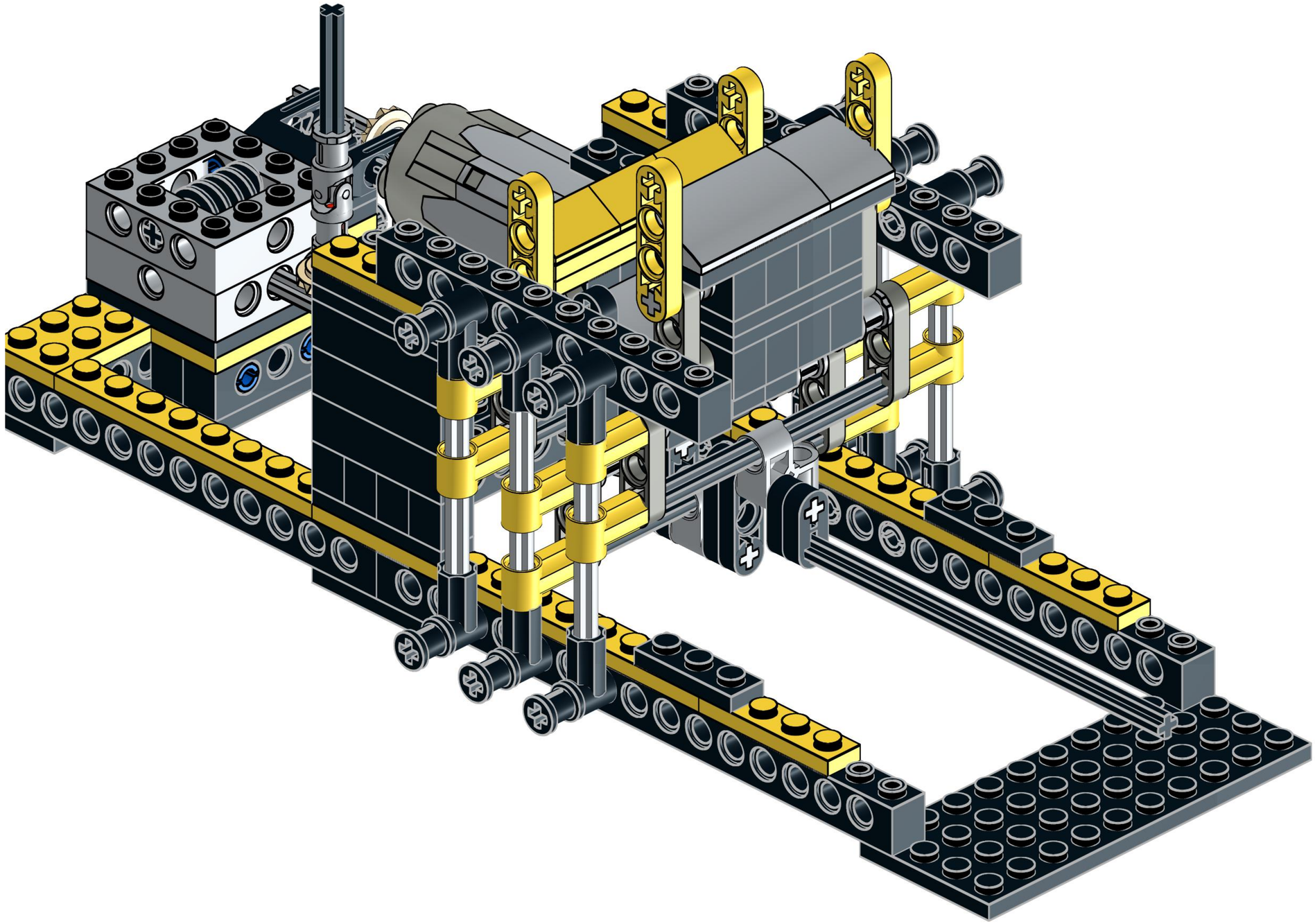

# 77

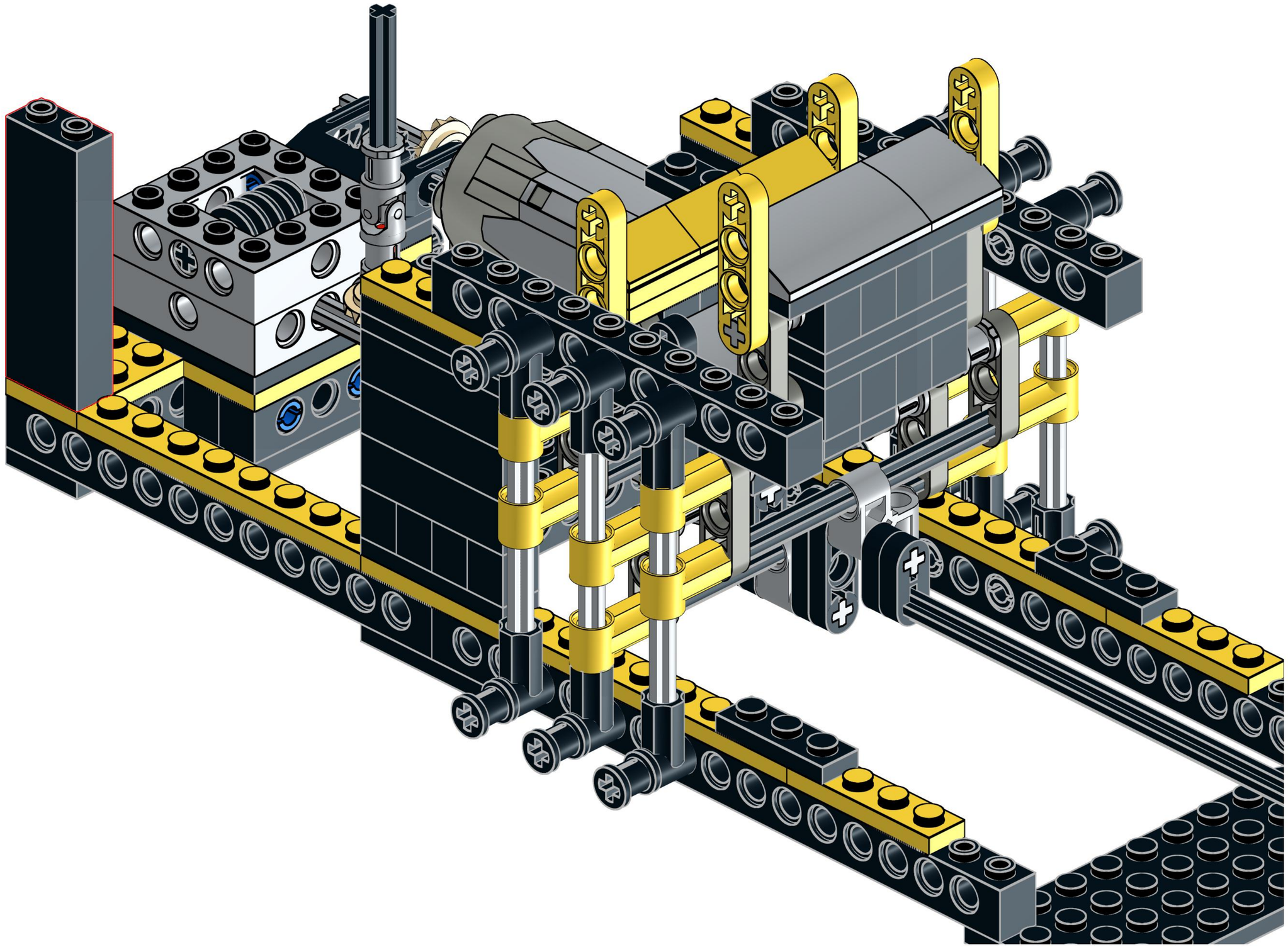

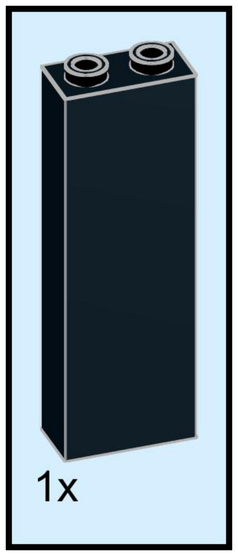

# 78

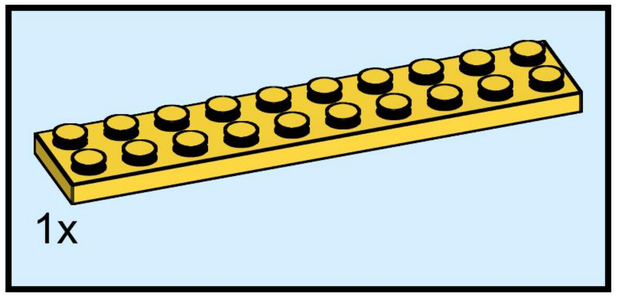


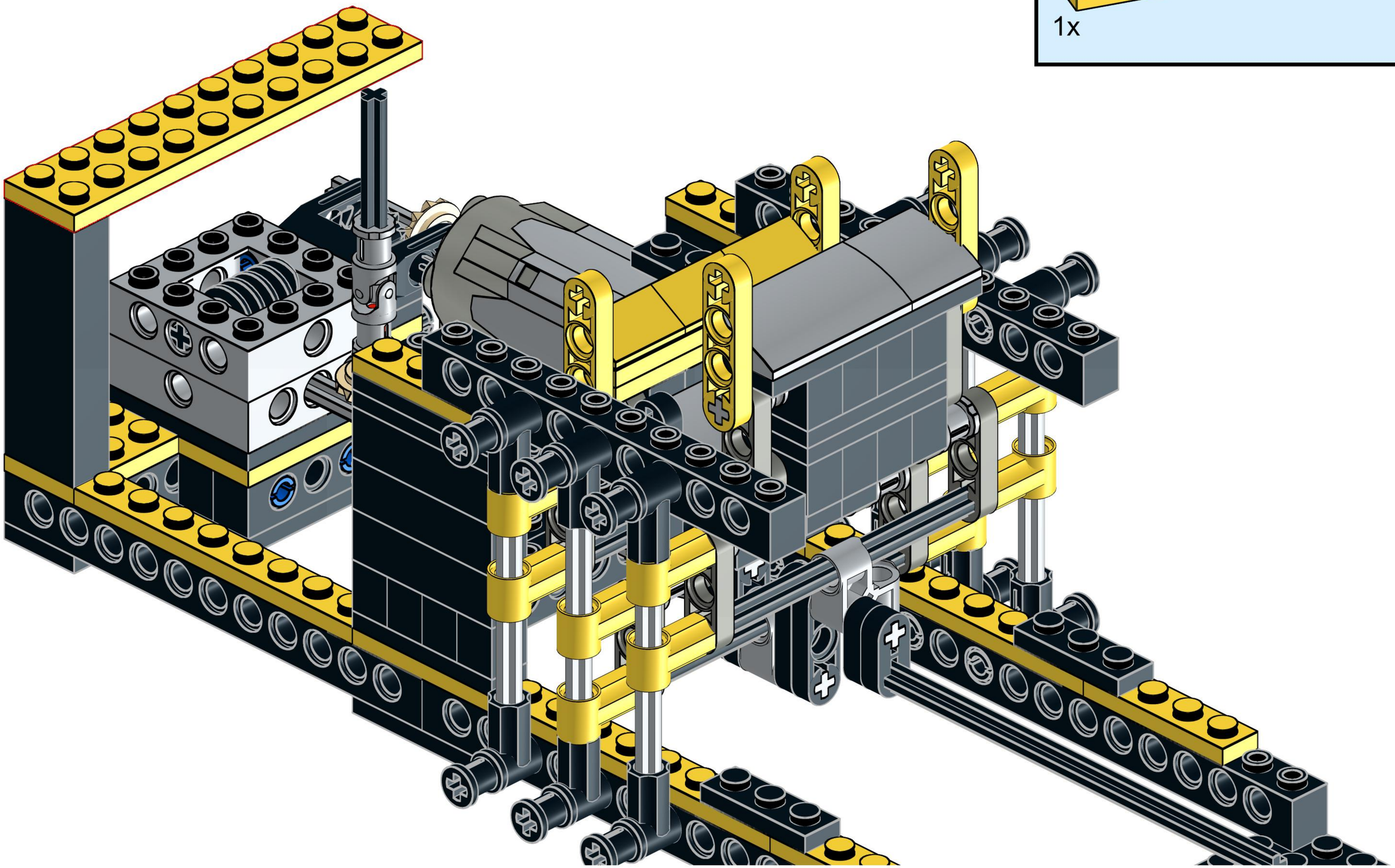

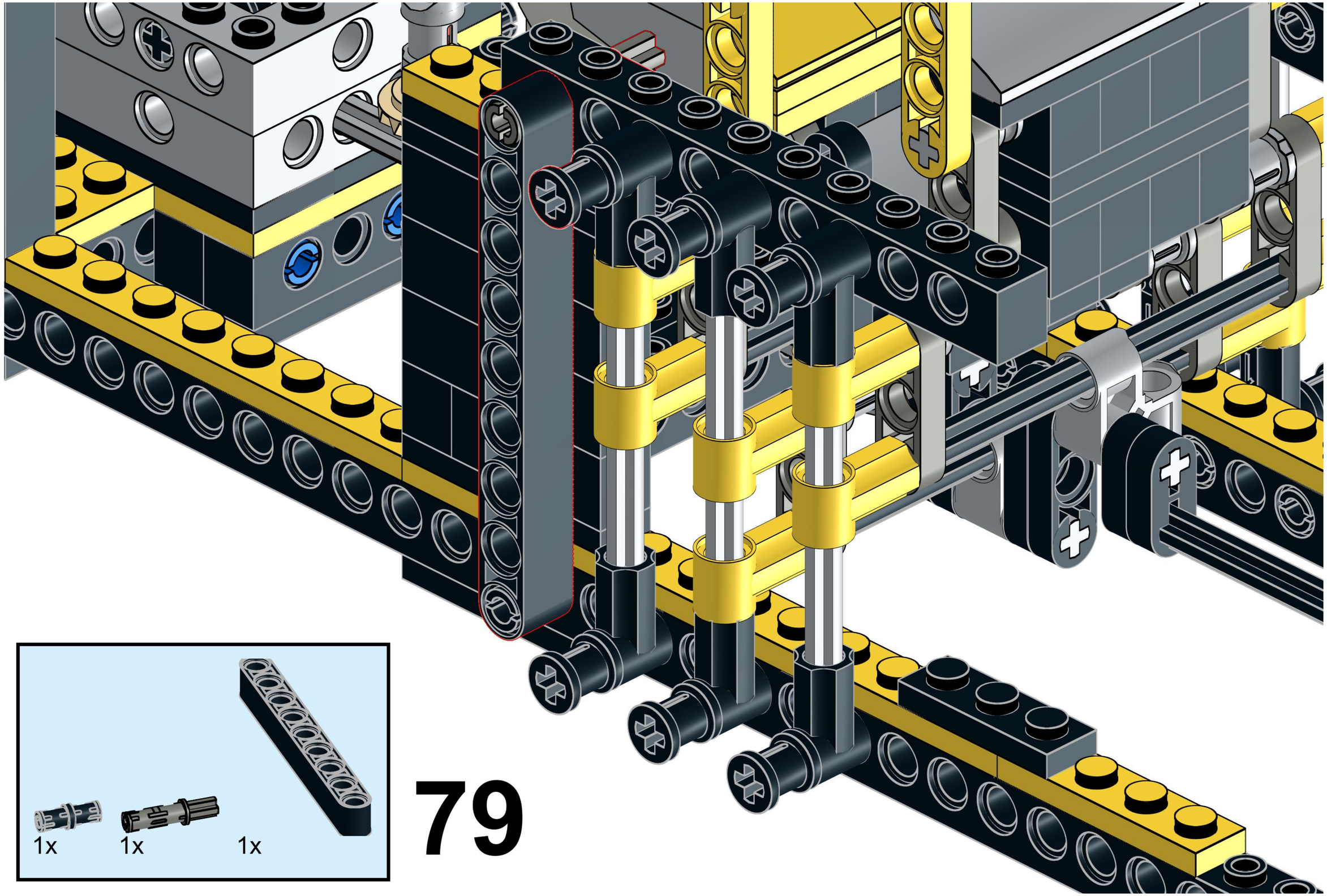


79

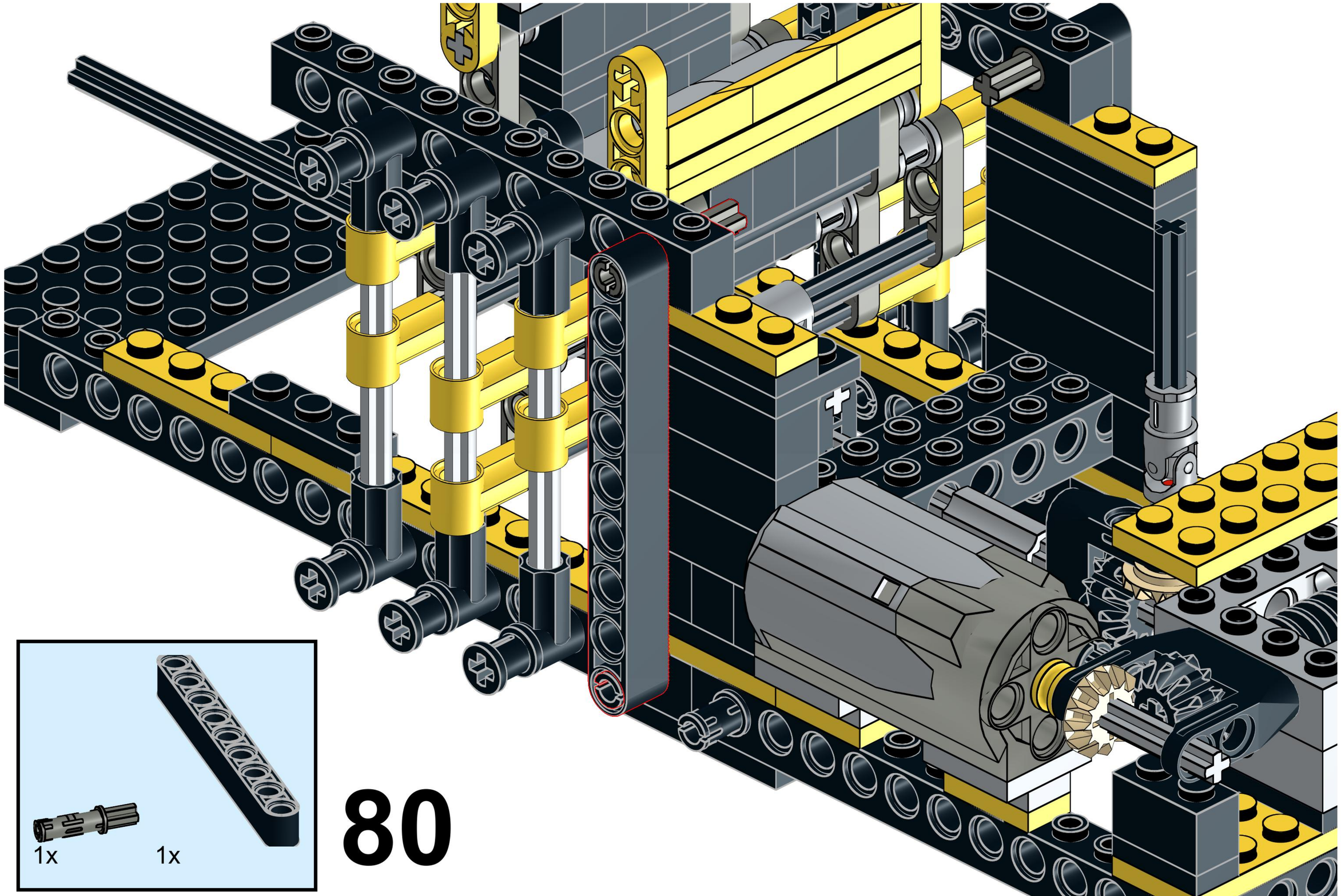


# 80

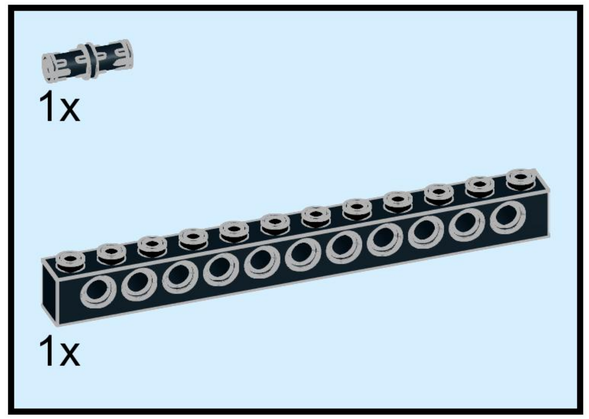
1x
1x

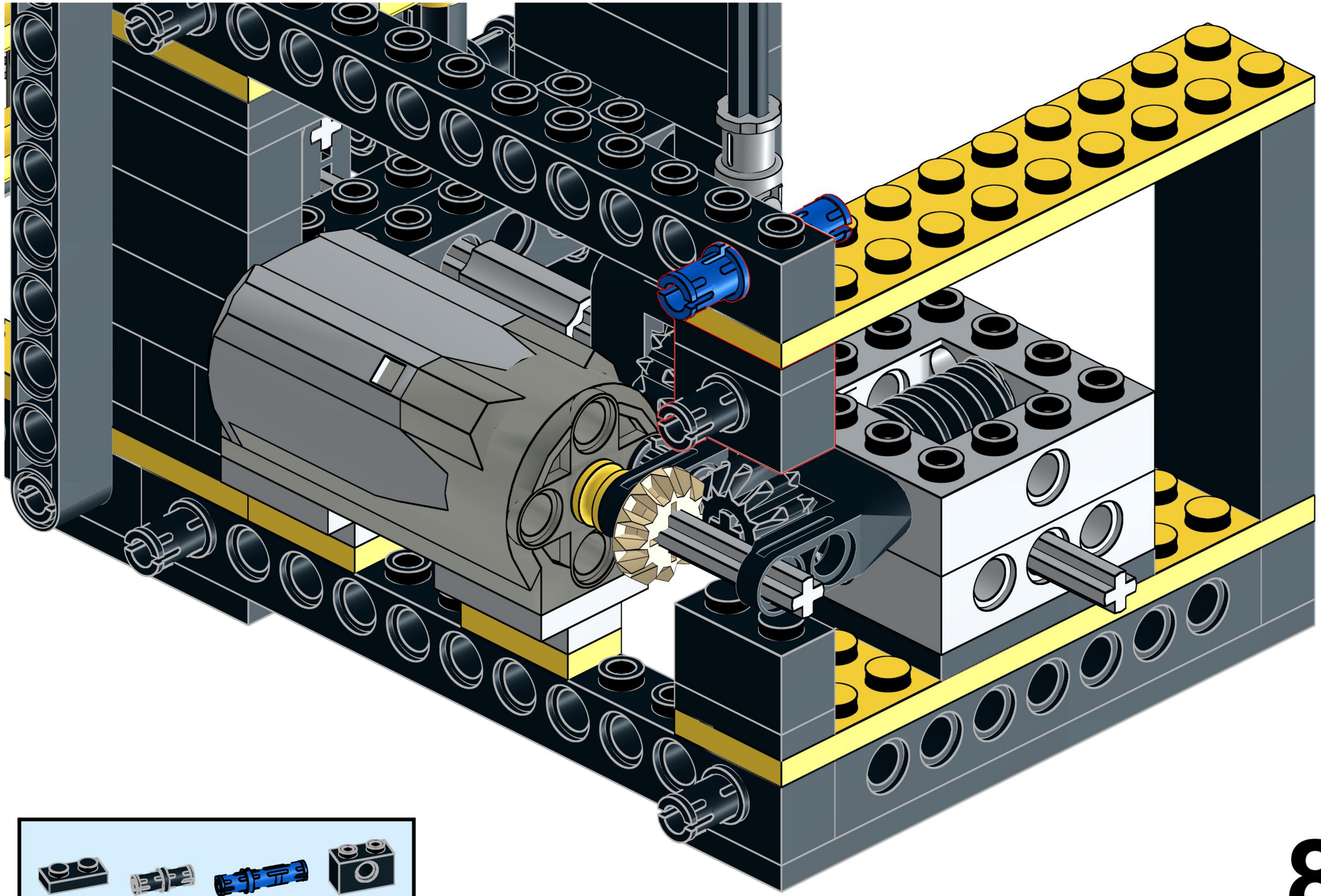

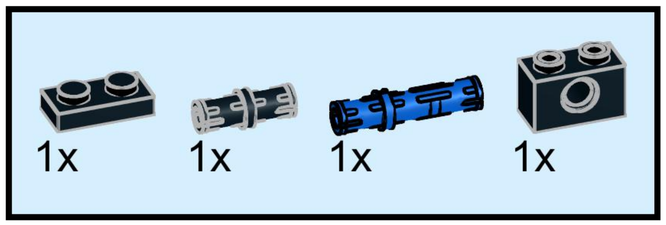
1x
1x
1x
1x

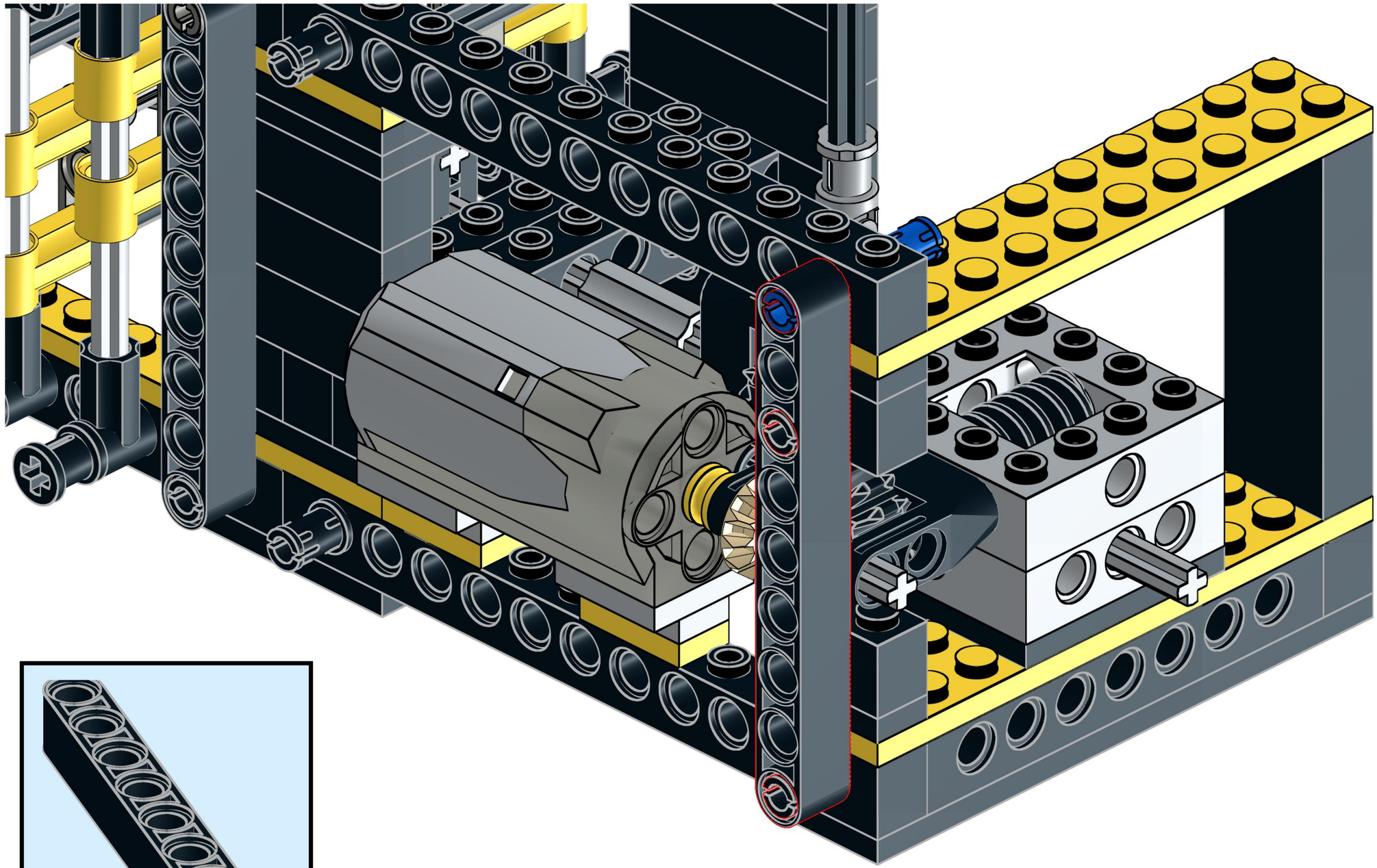

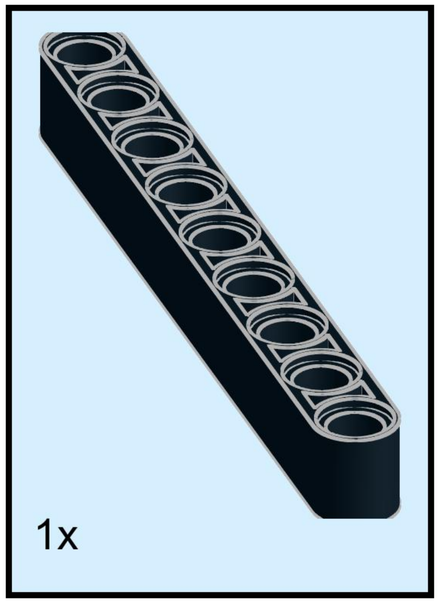
1x

# 84

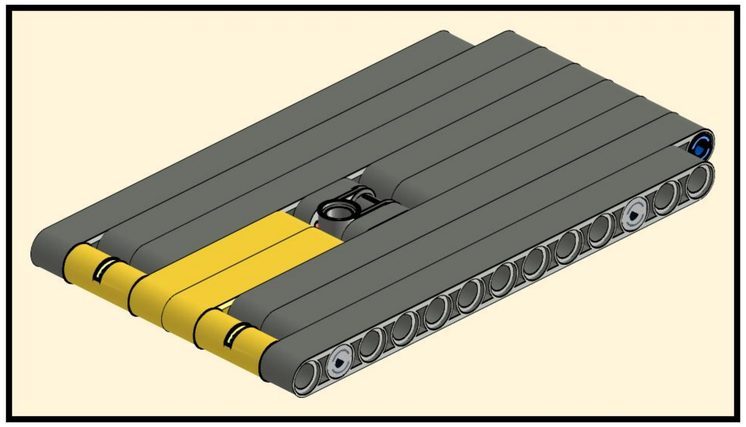

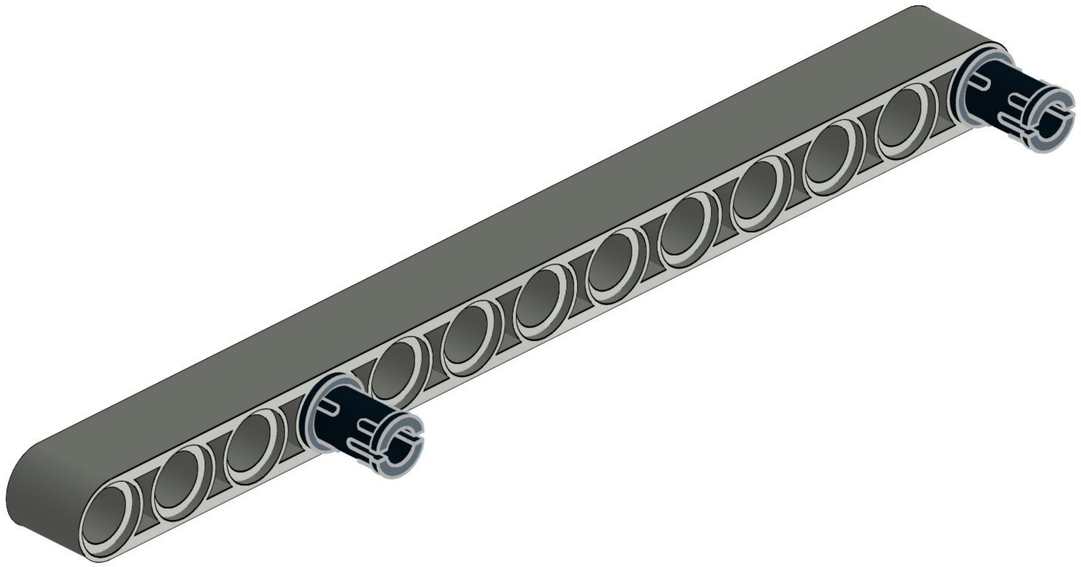

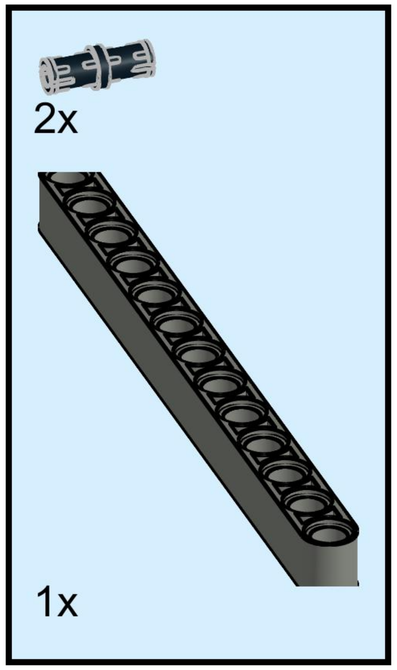

# 85

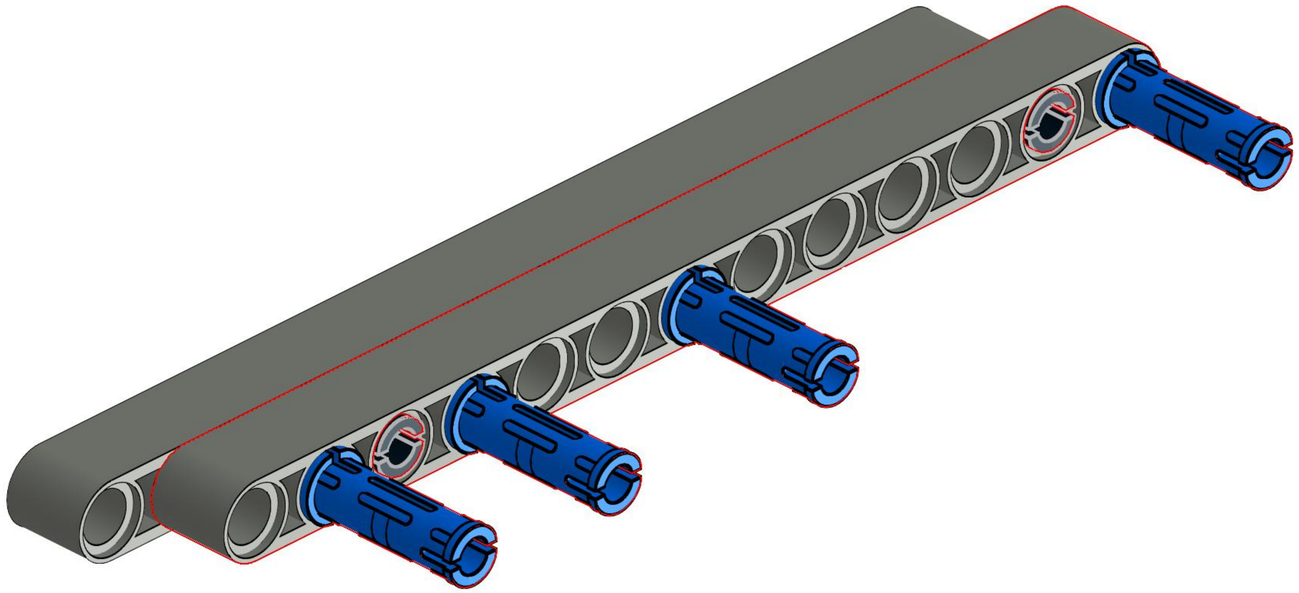

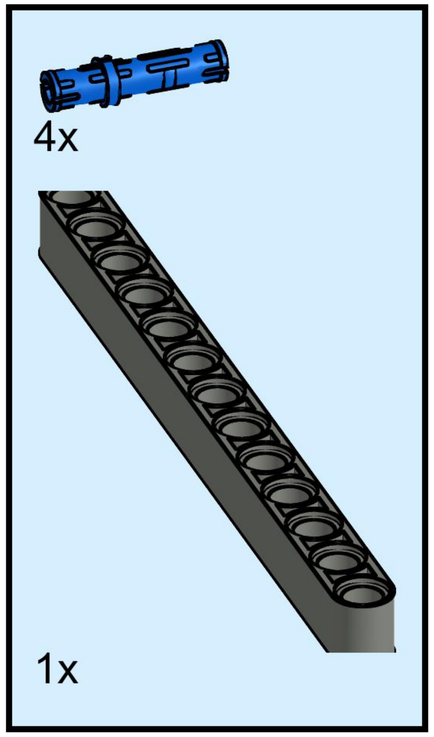

# 86

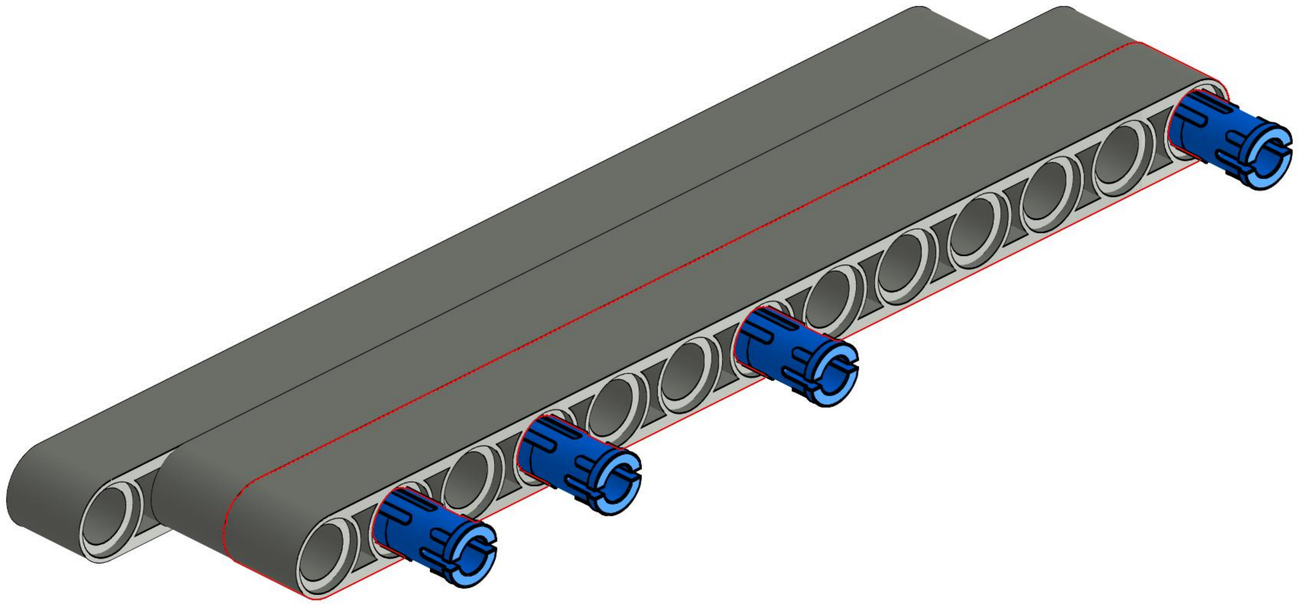

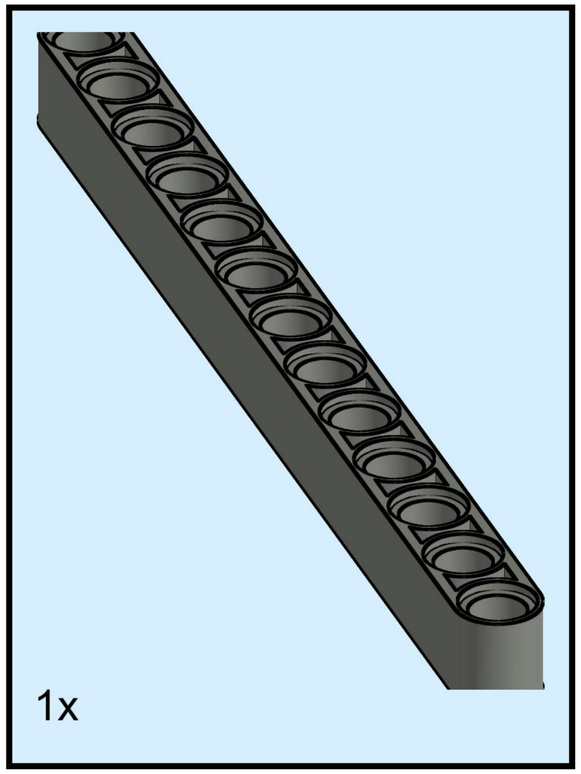

# 87

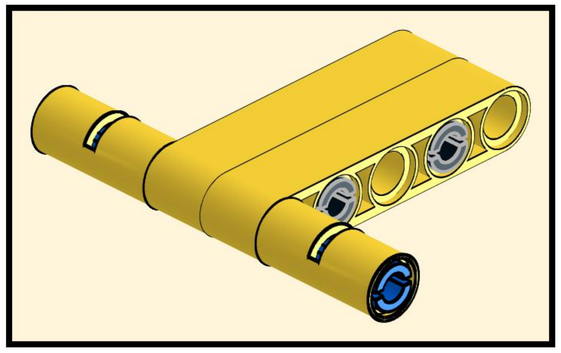

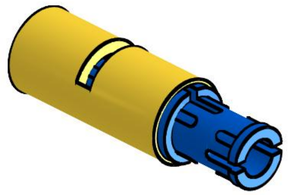

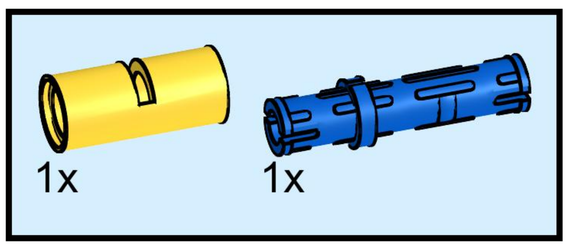

# 88

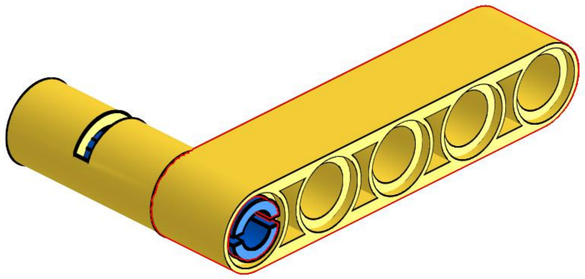

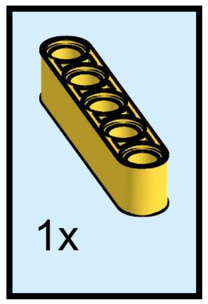

# 89

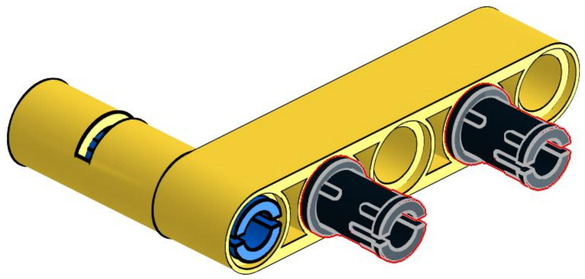

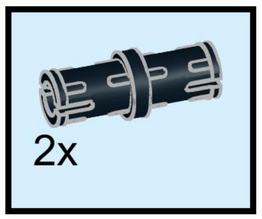

# 90

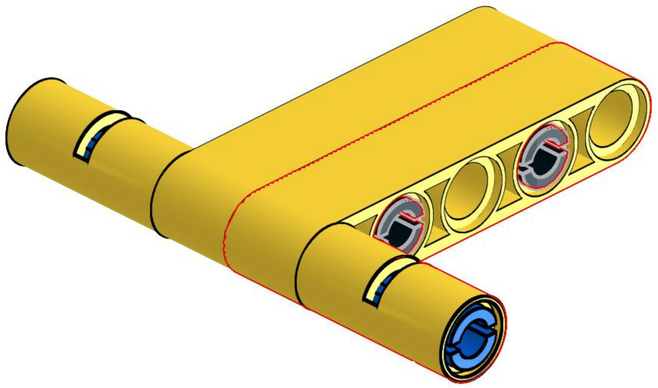

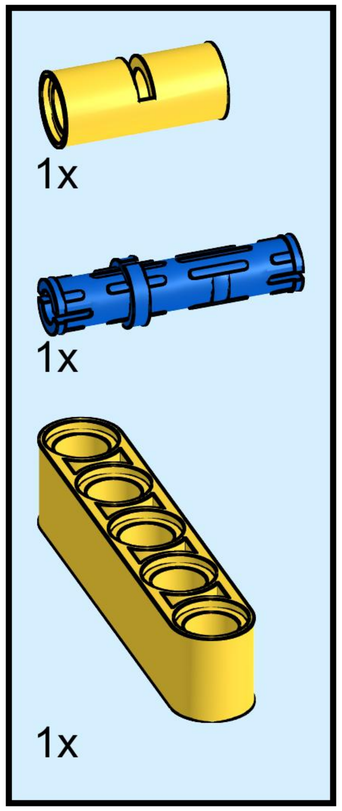

# 91

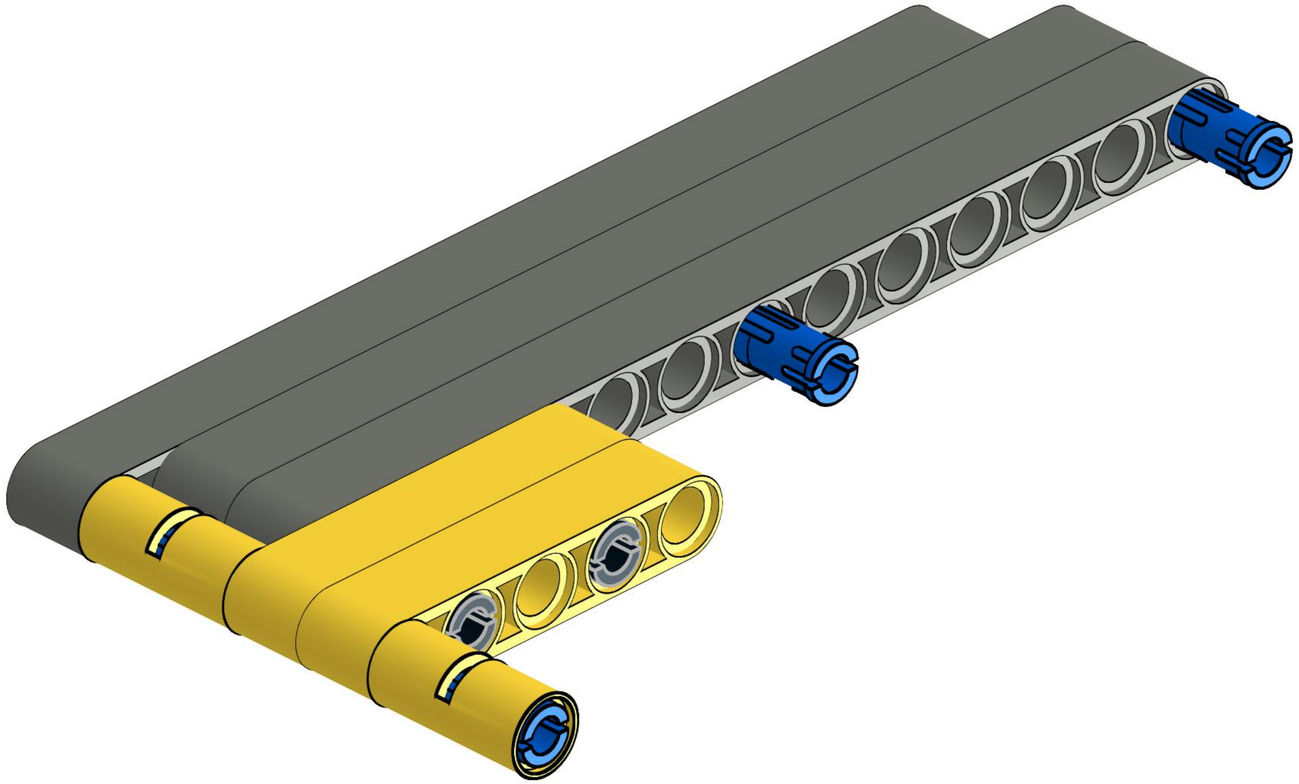

# 92

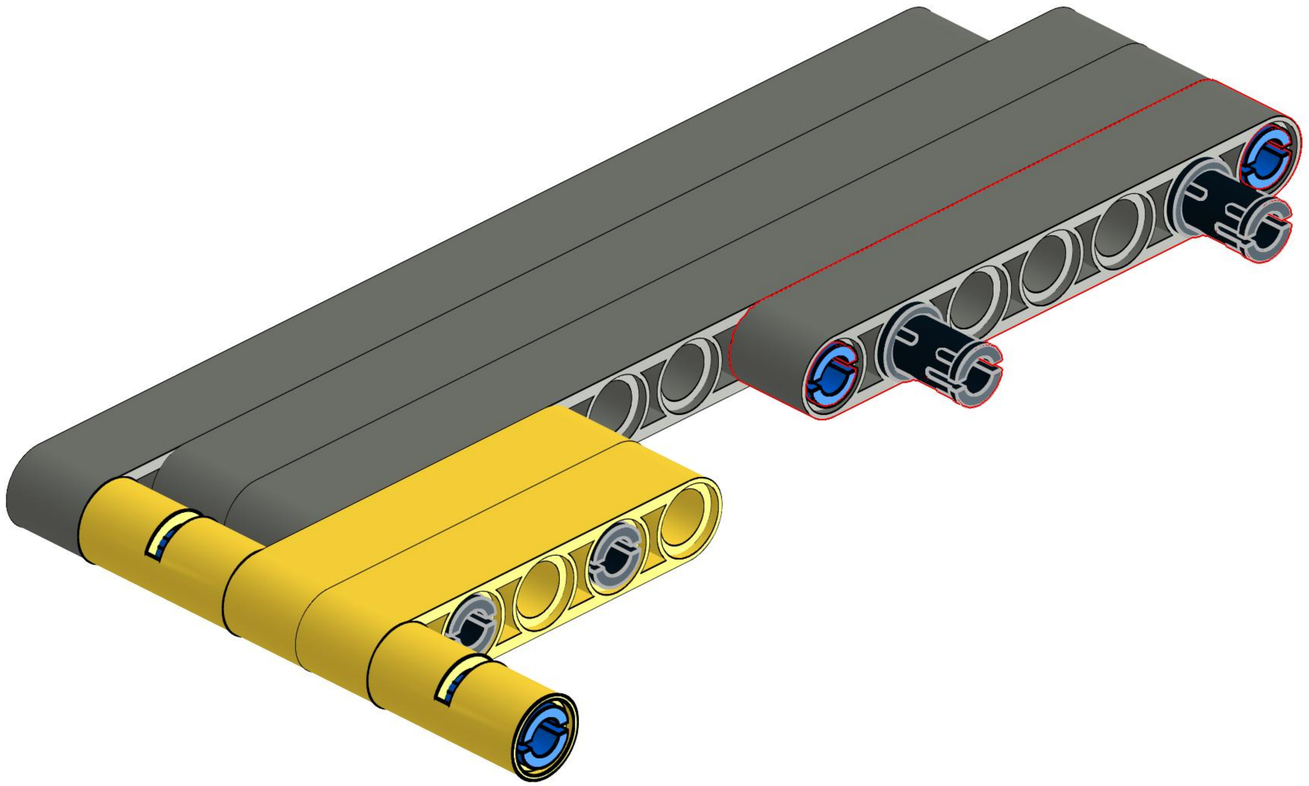

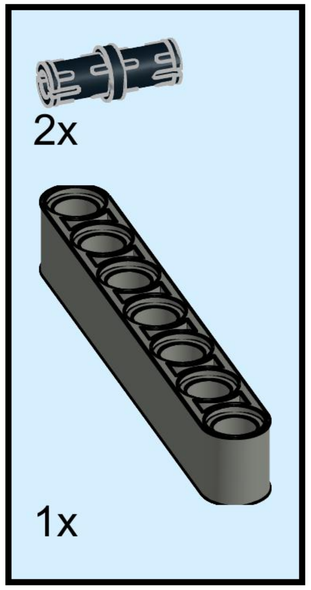

# 93

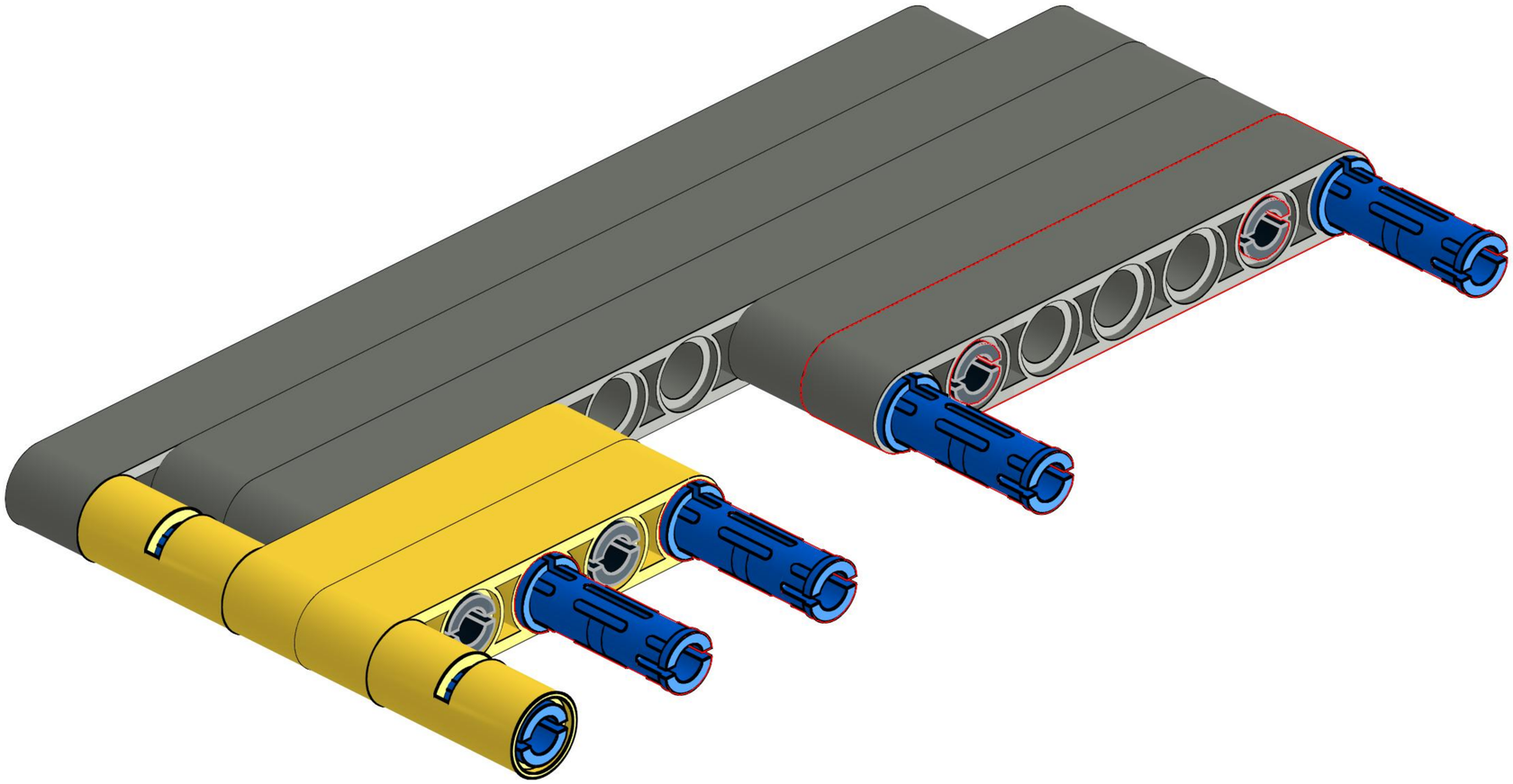

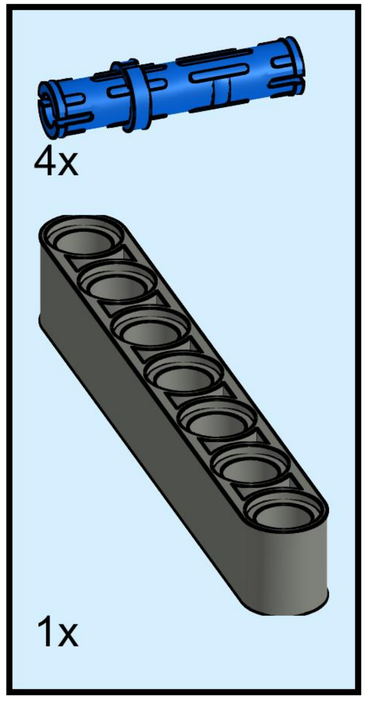

# 94

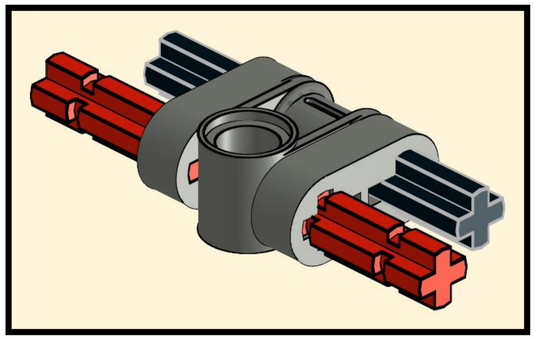

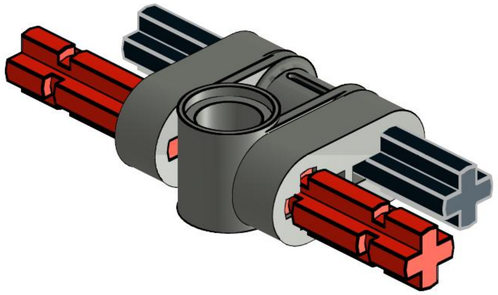

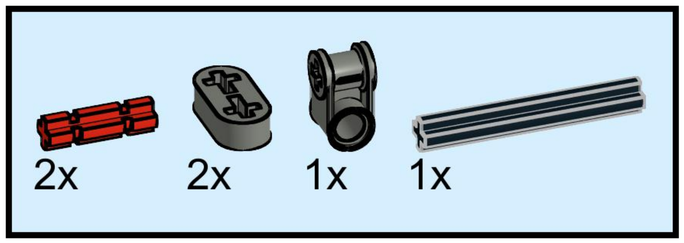

# 95

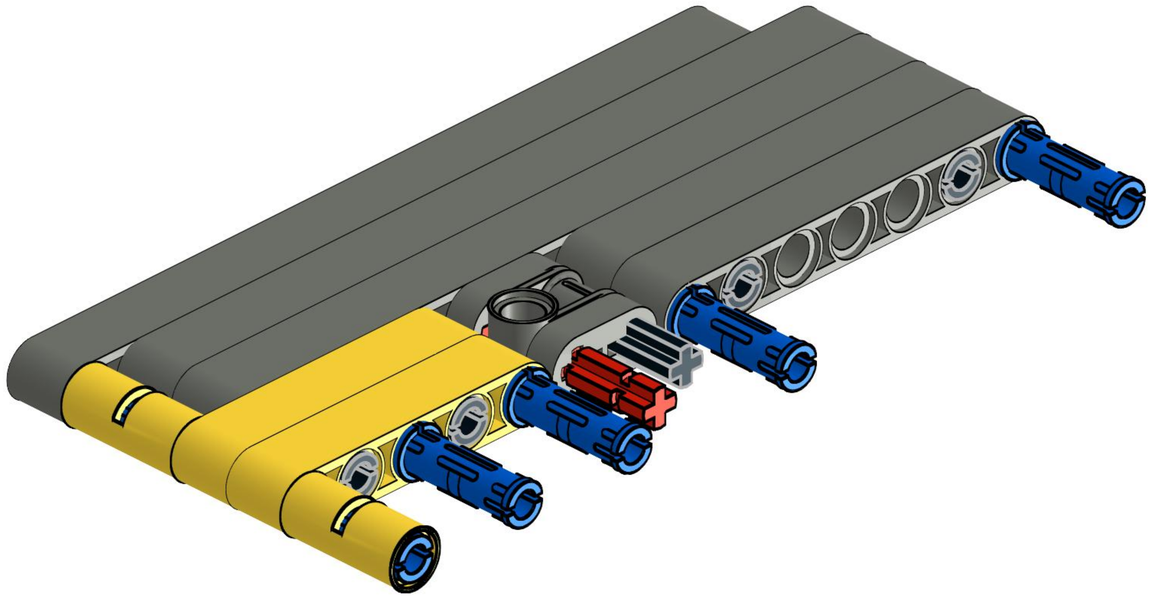

# 96

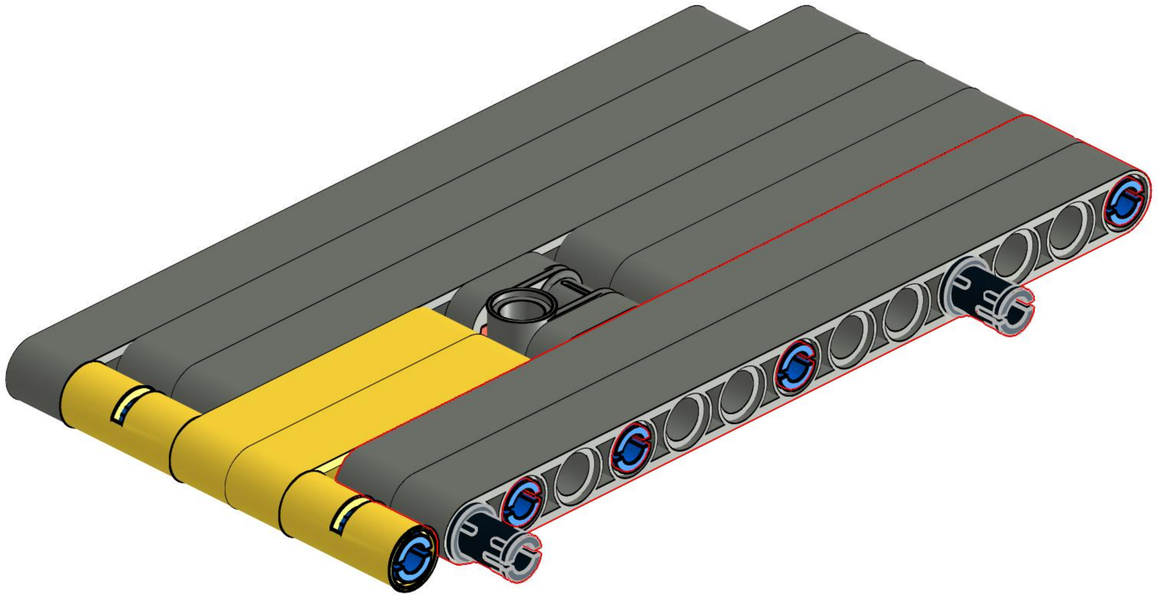

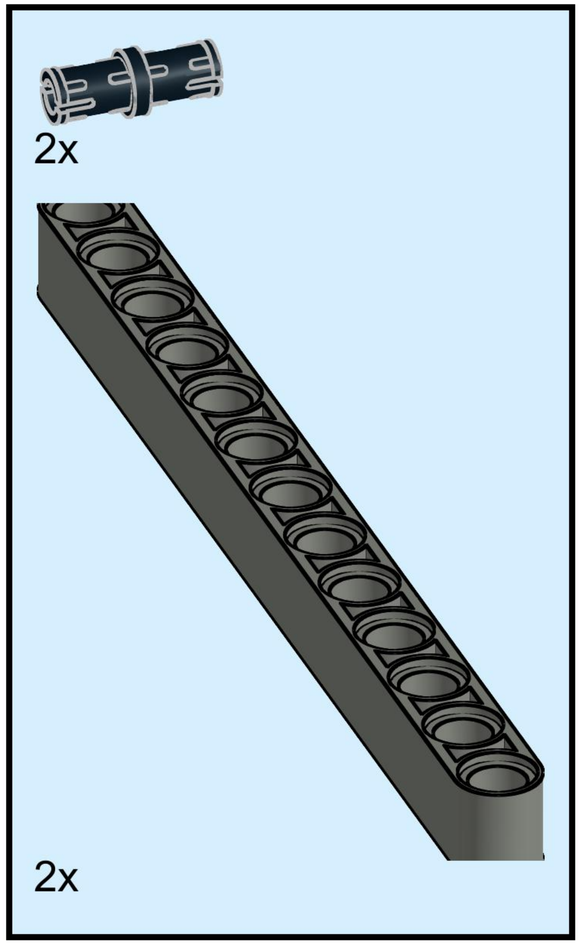

# 97

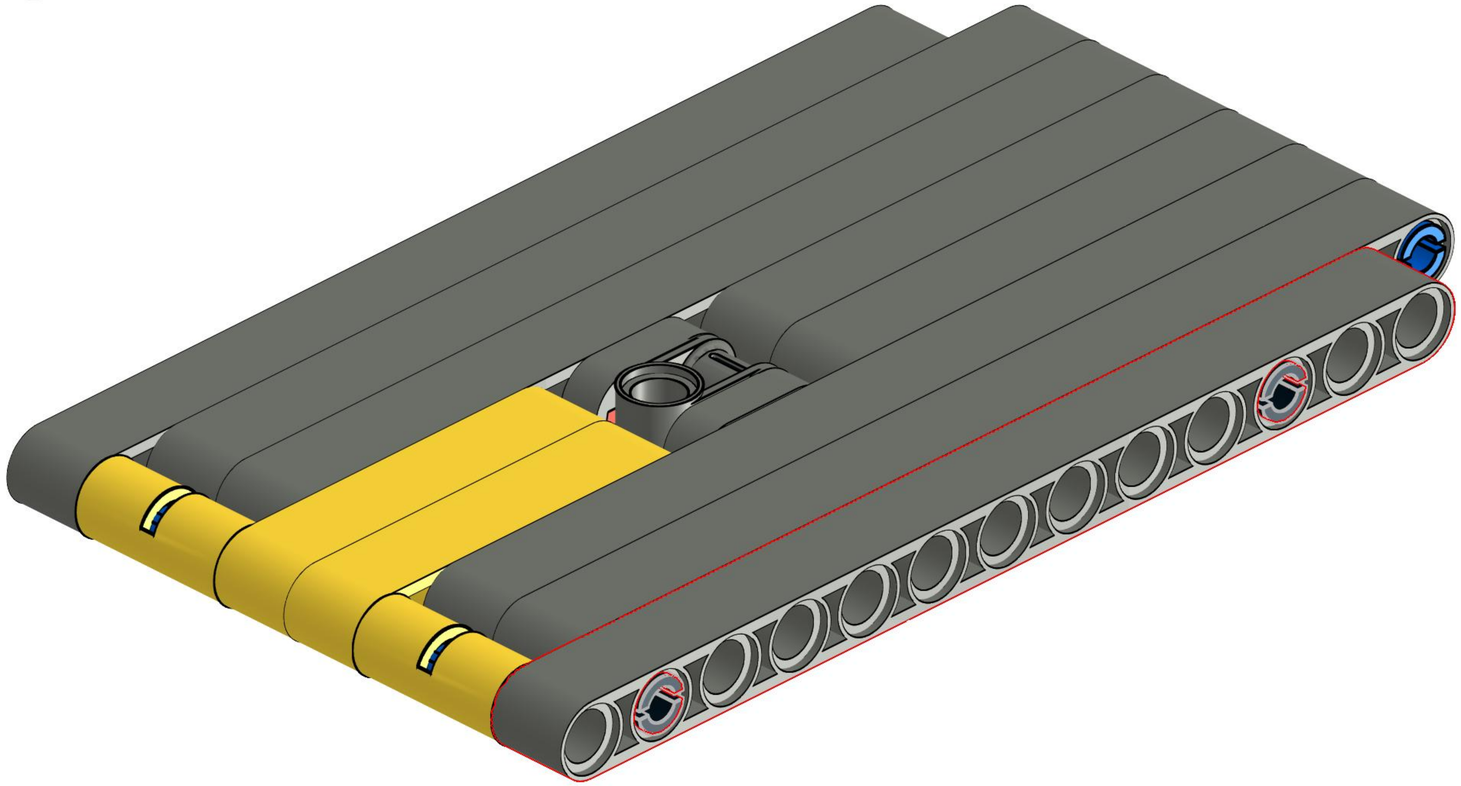

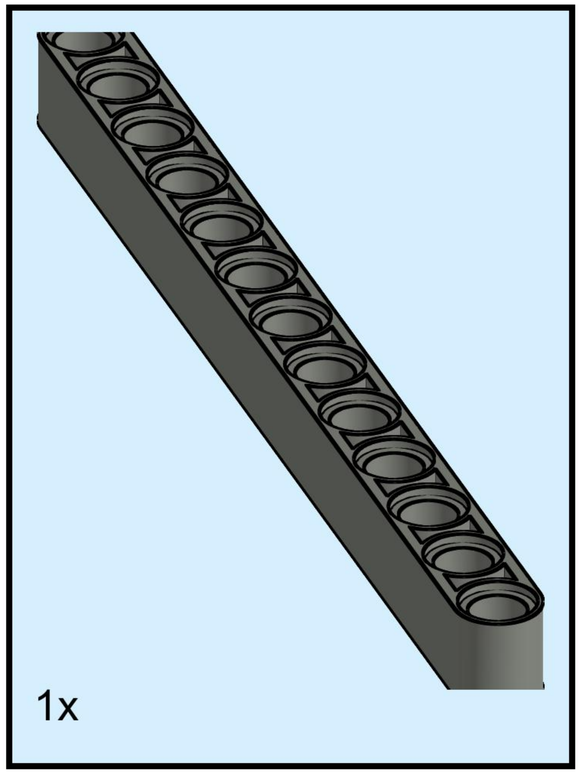

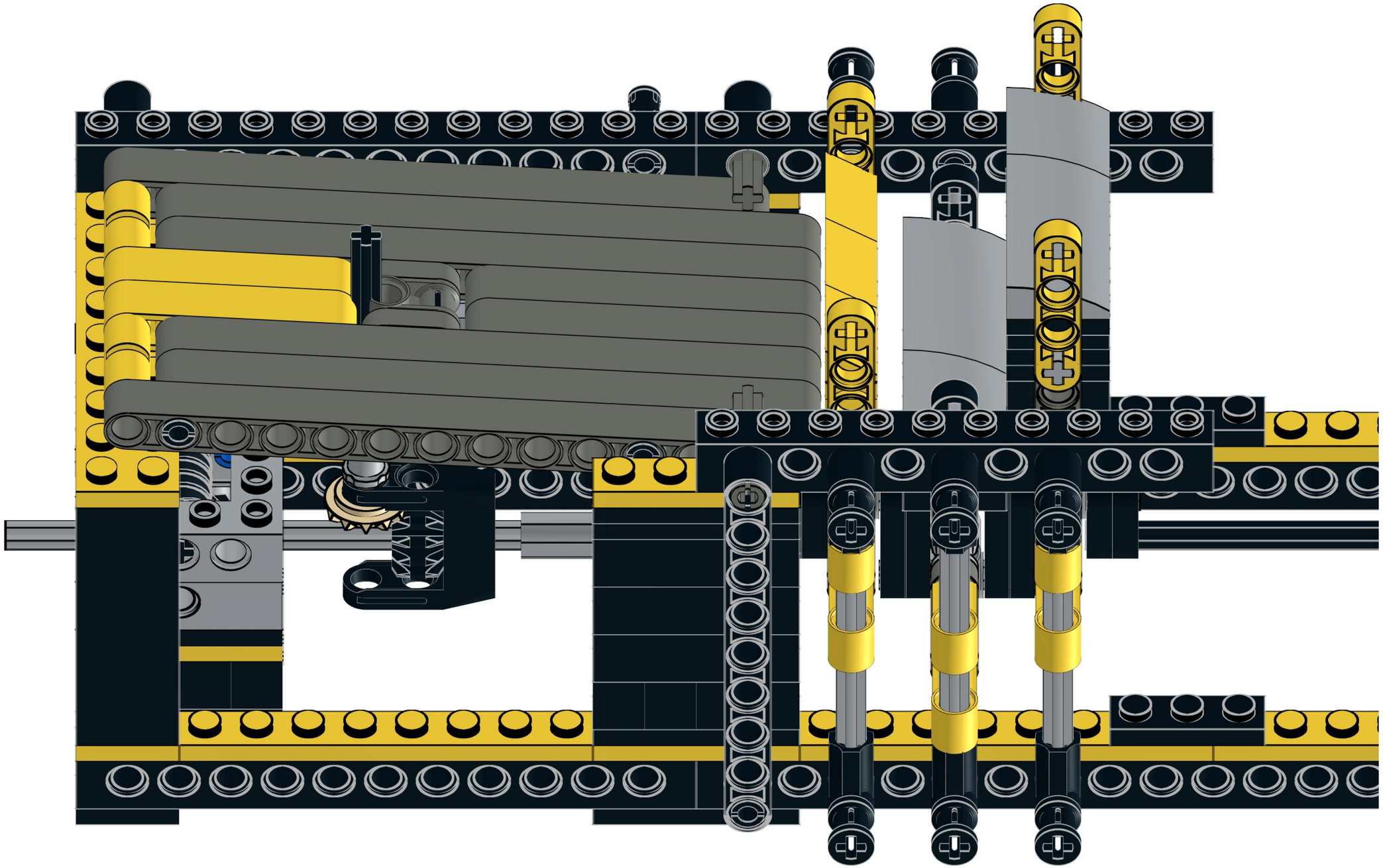

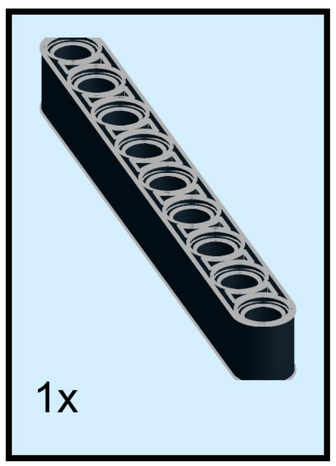
1x

# 100

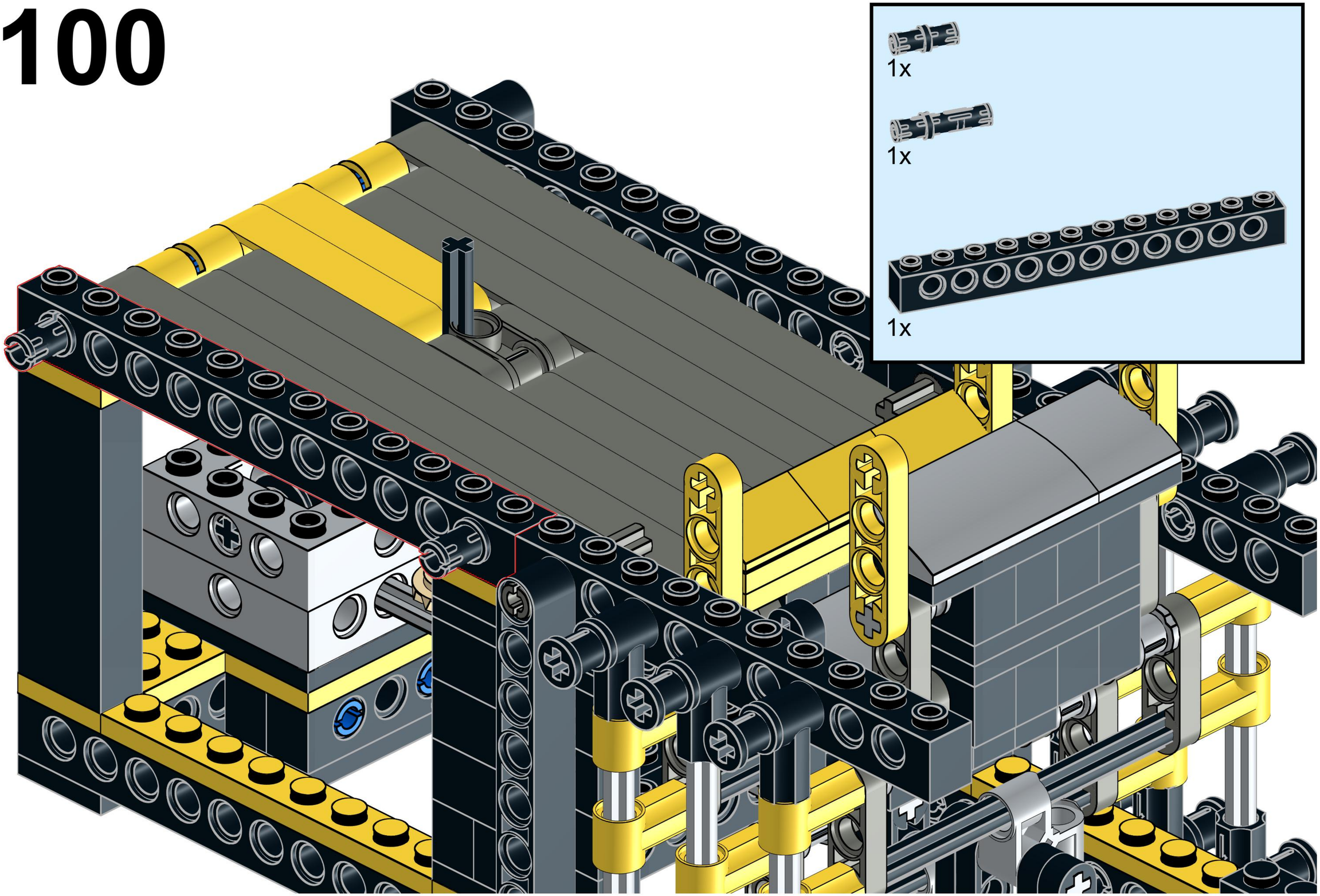

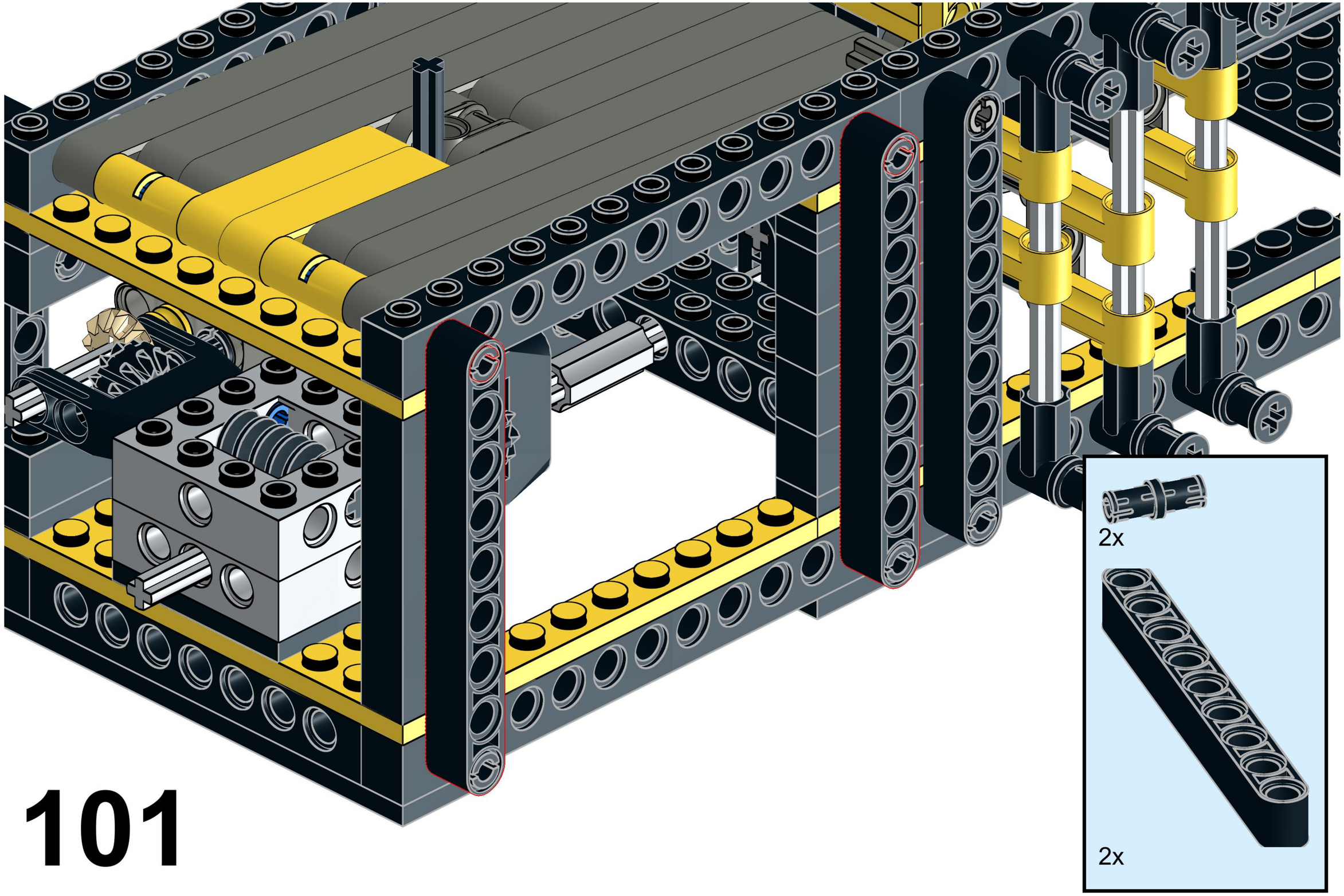


101

# 102

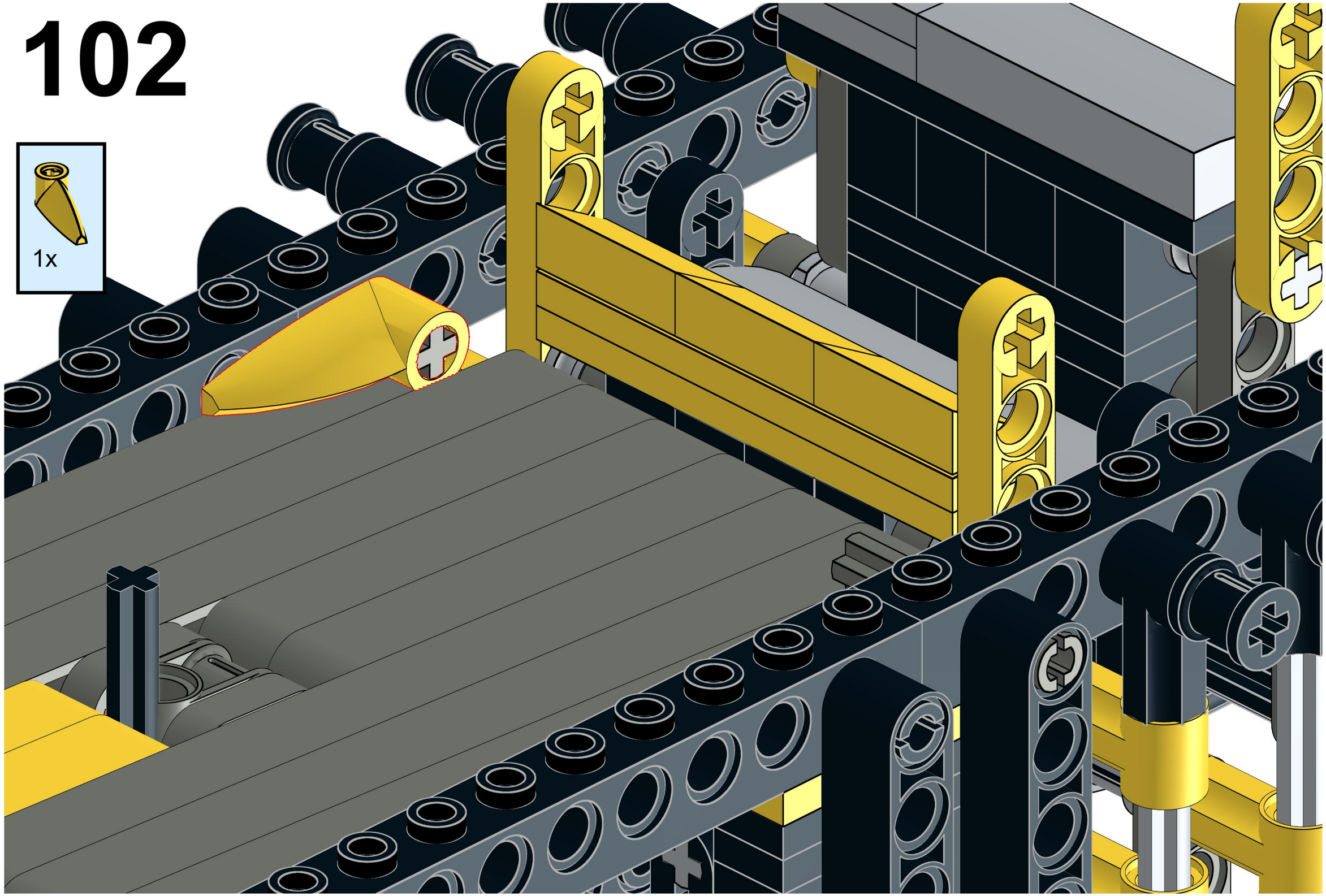

# 103




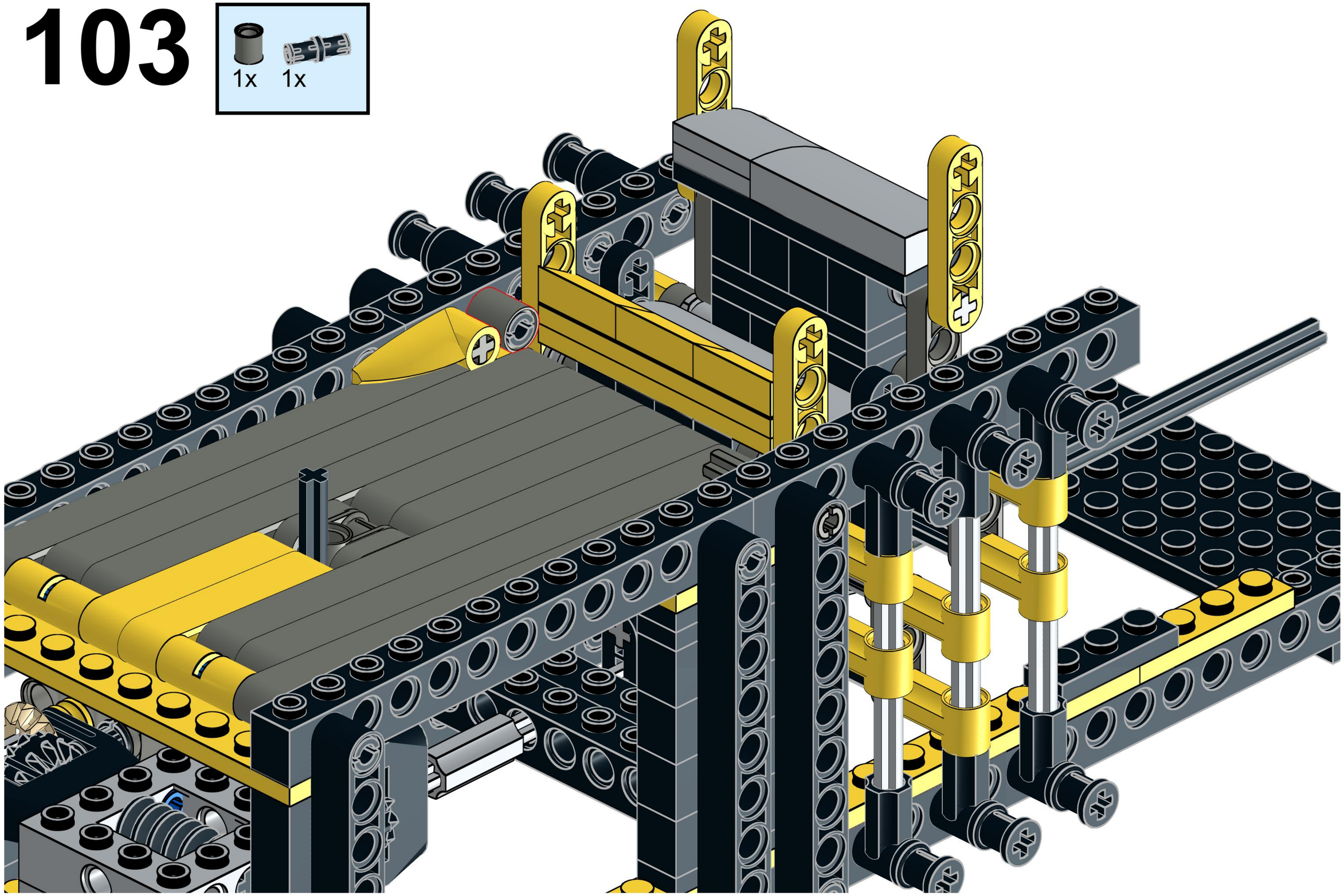

# 104

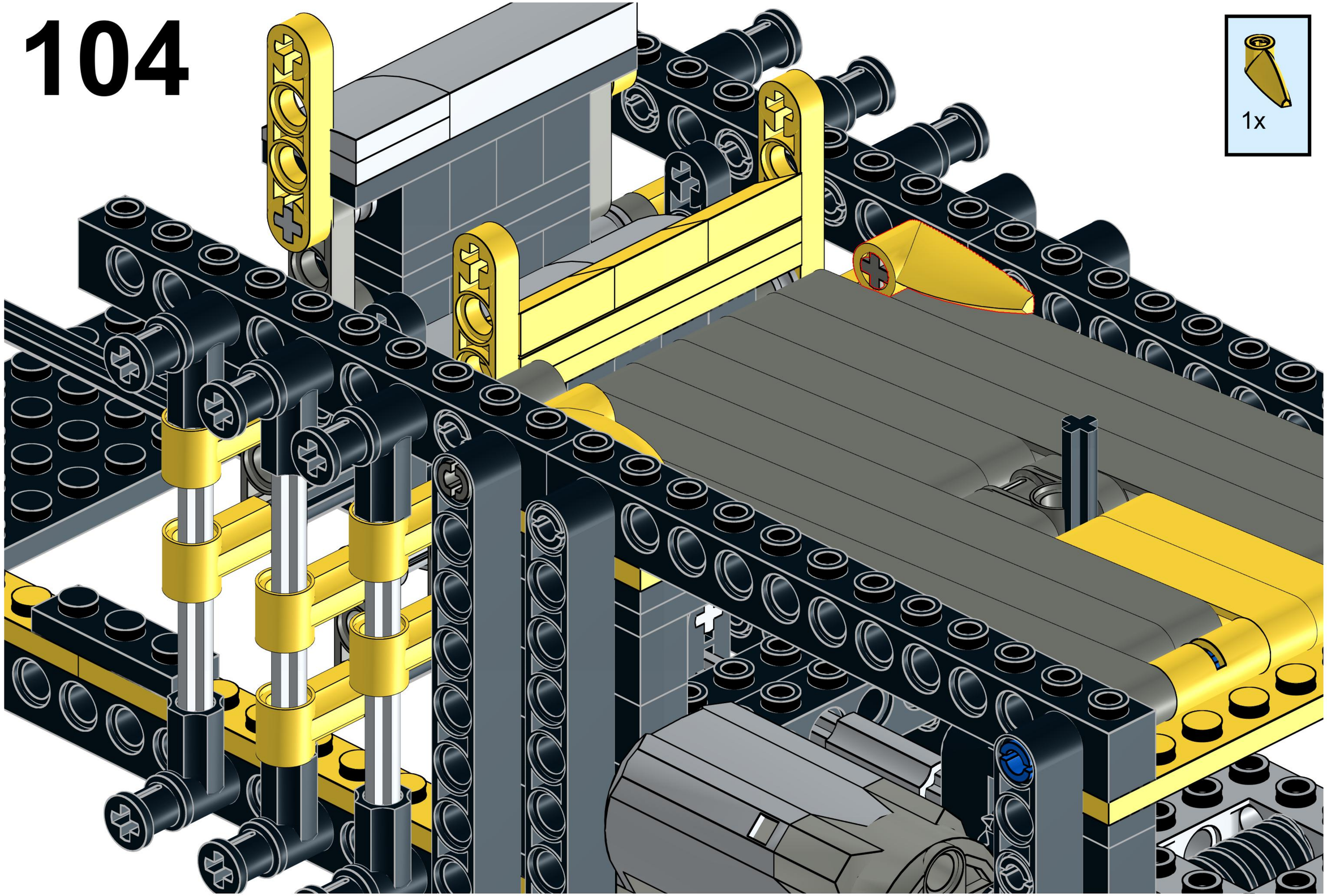

# 105

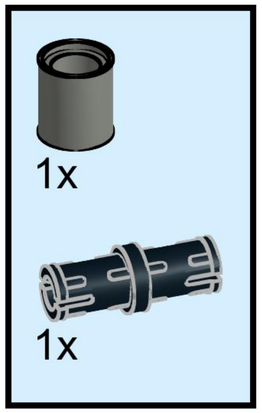

# 106




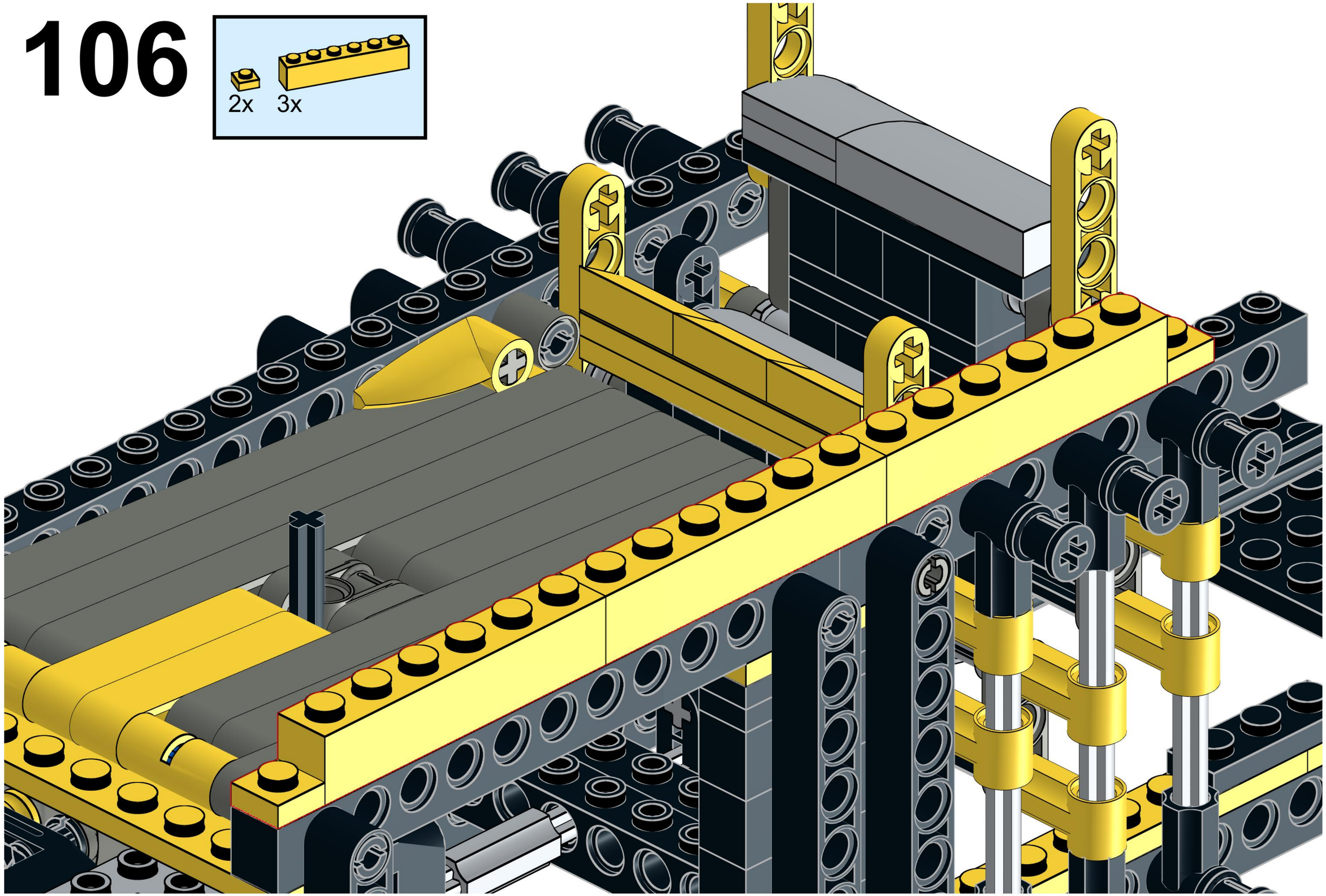

# 107

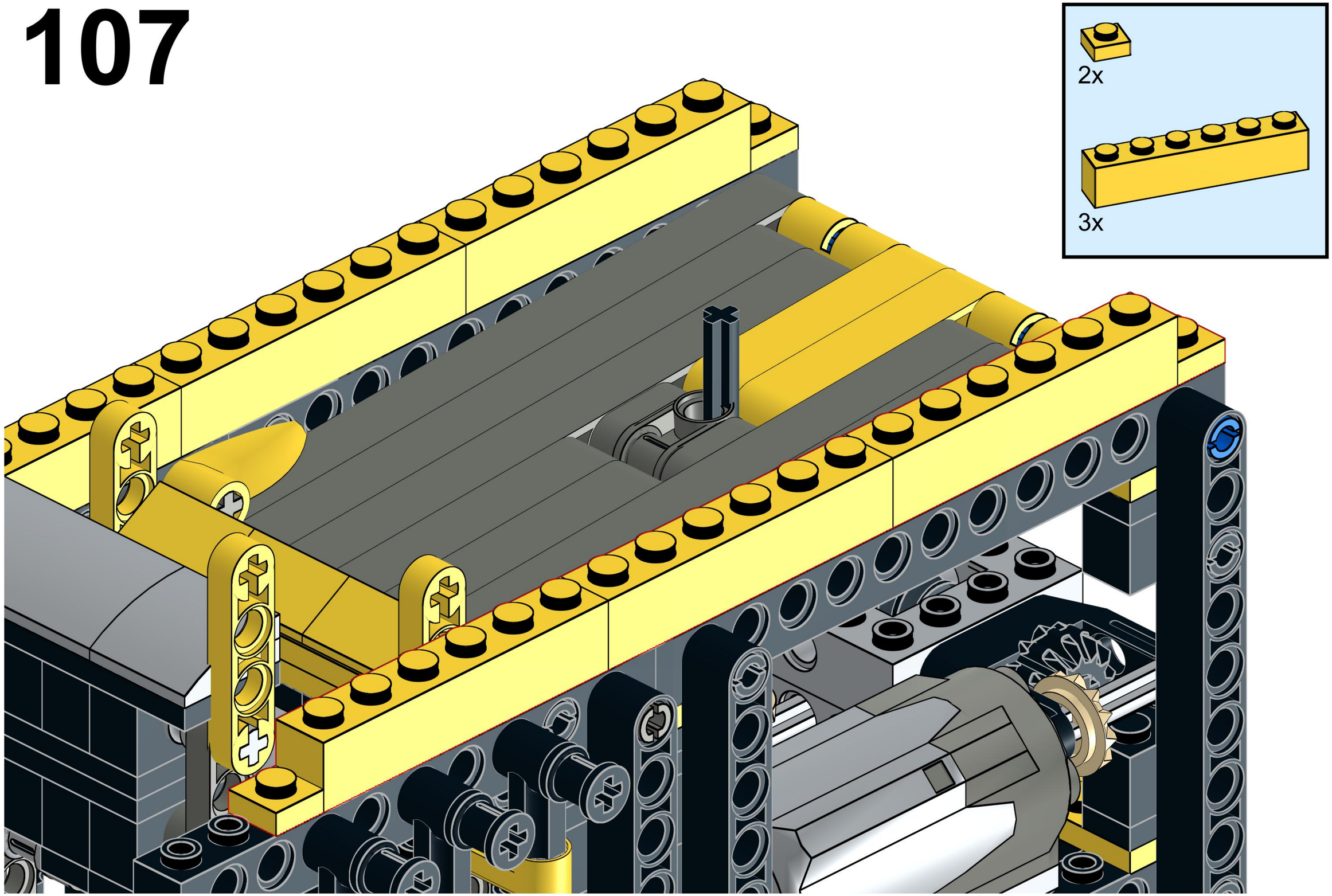

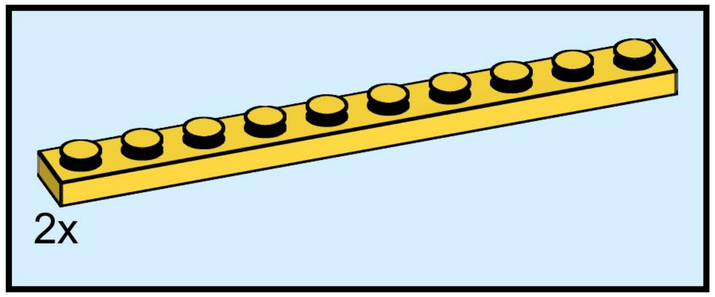


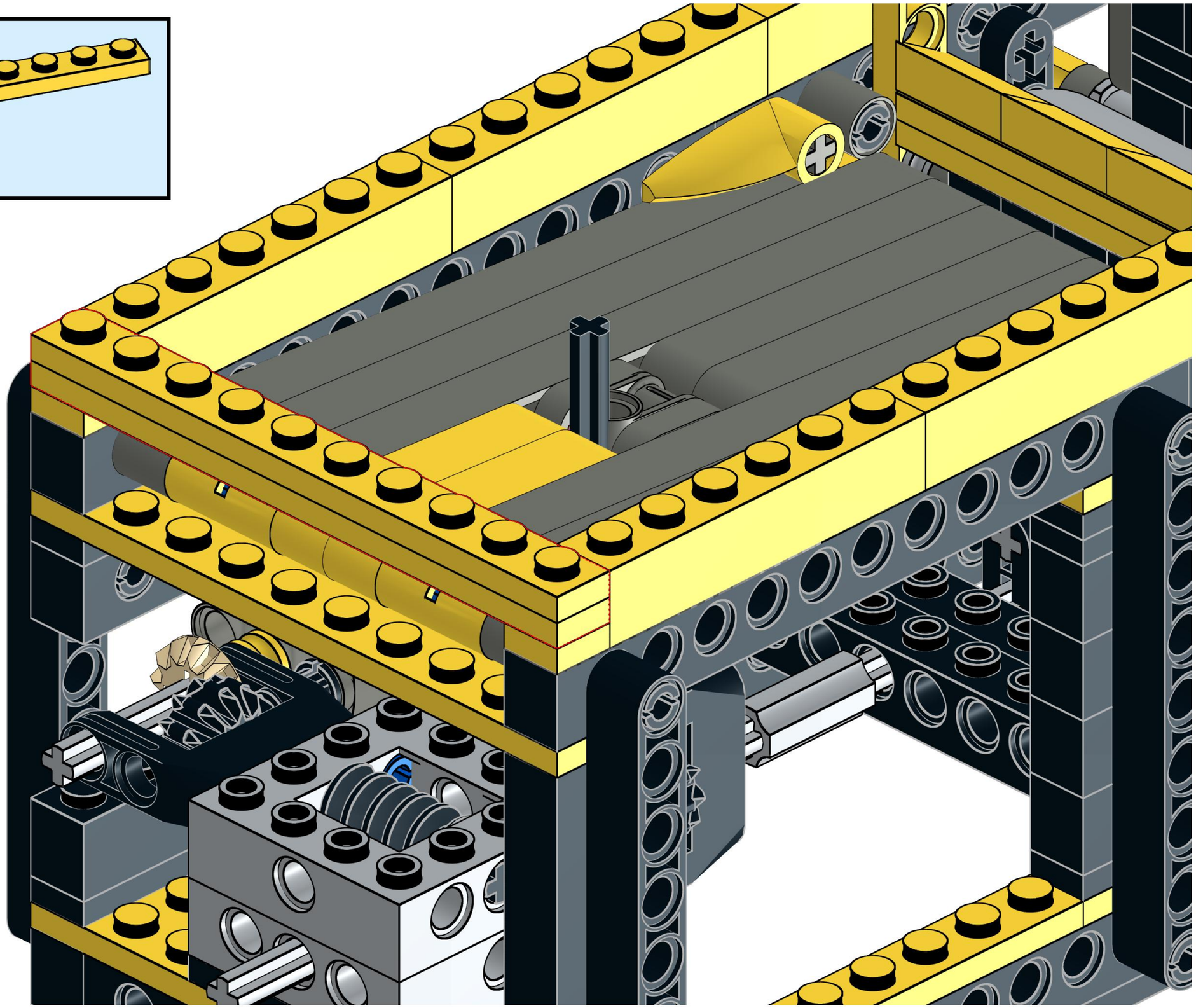

108

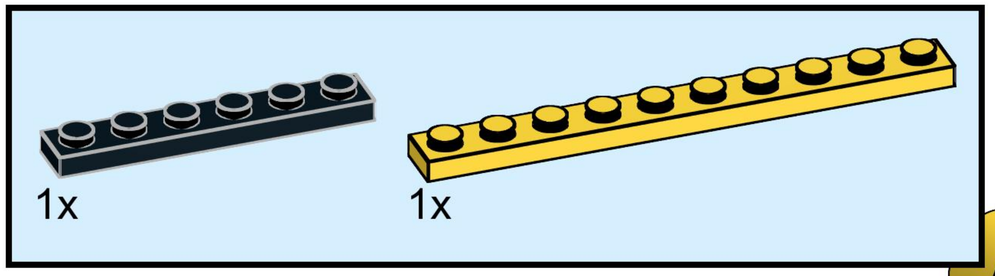


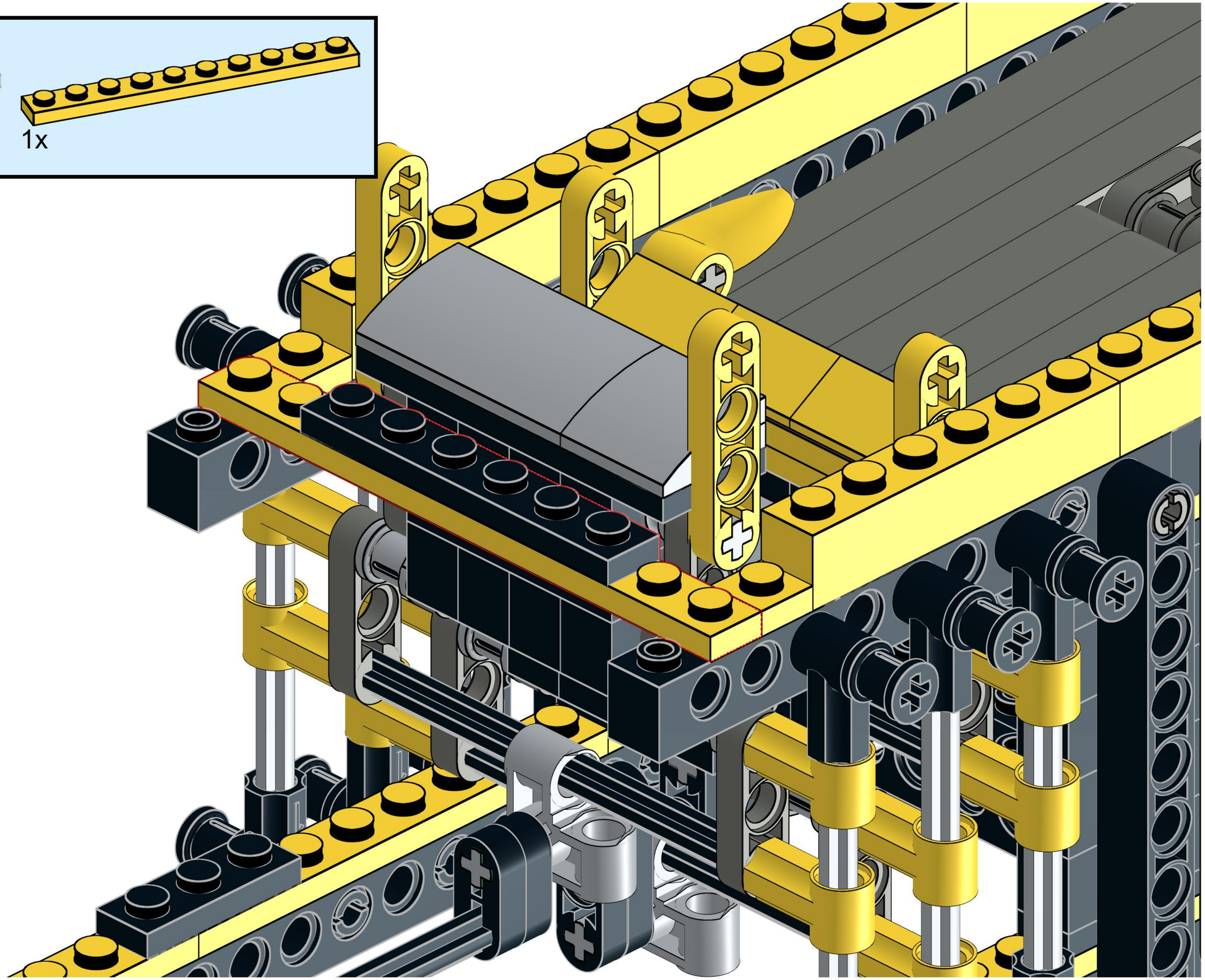

109

# 110




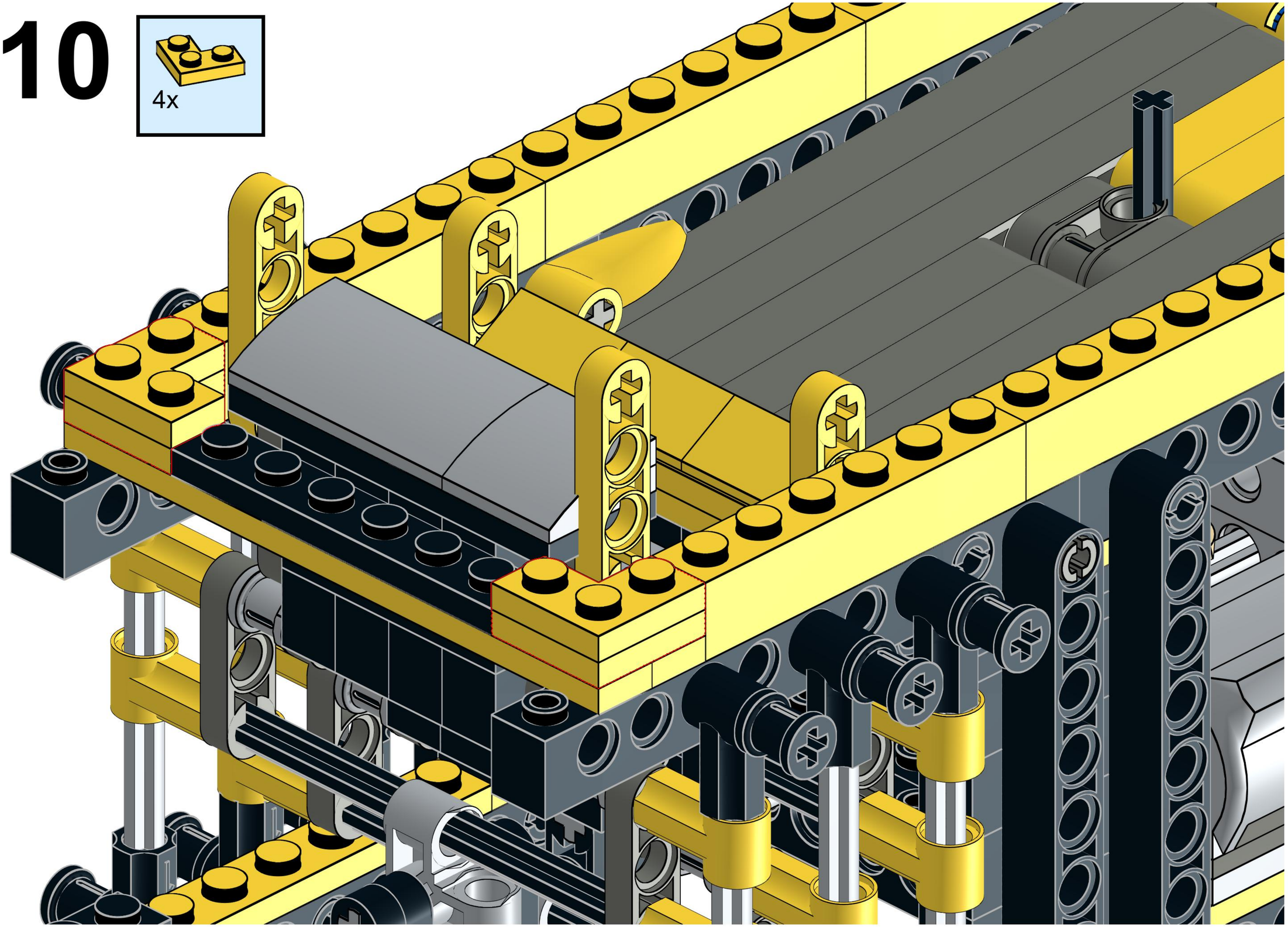

# 111

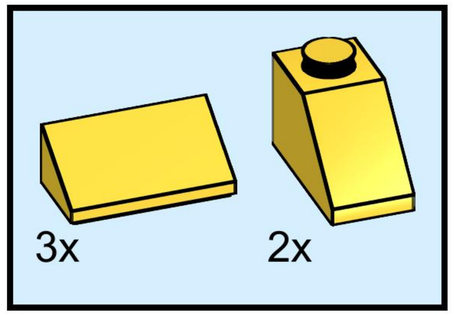


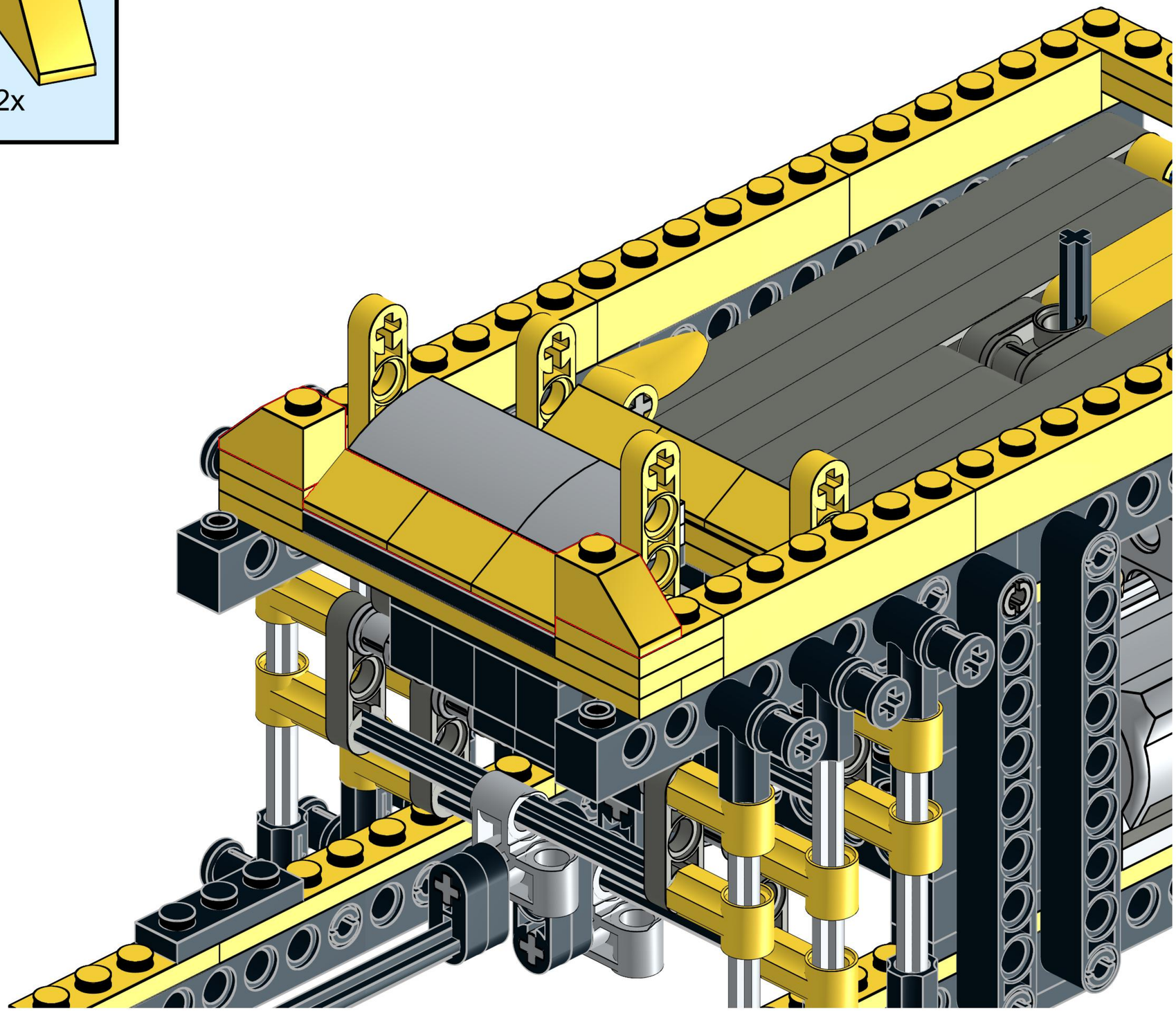

# 112

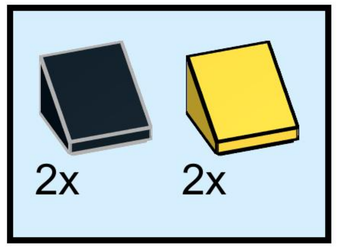


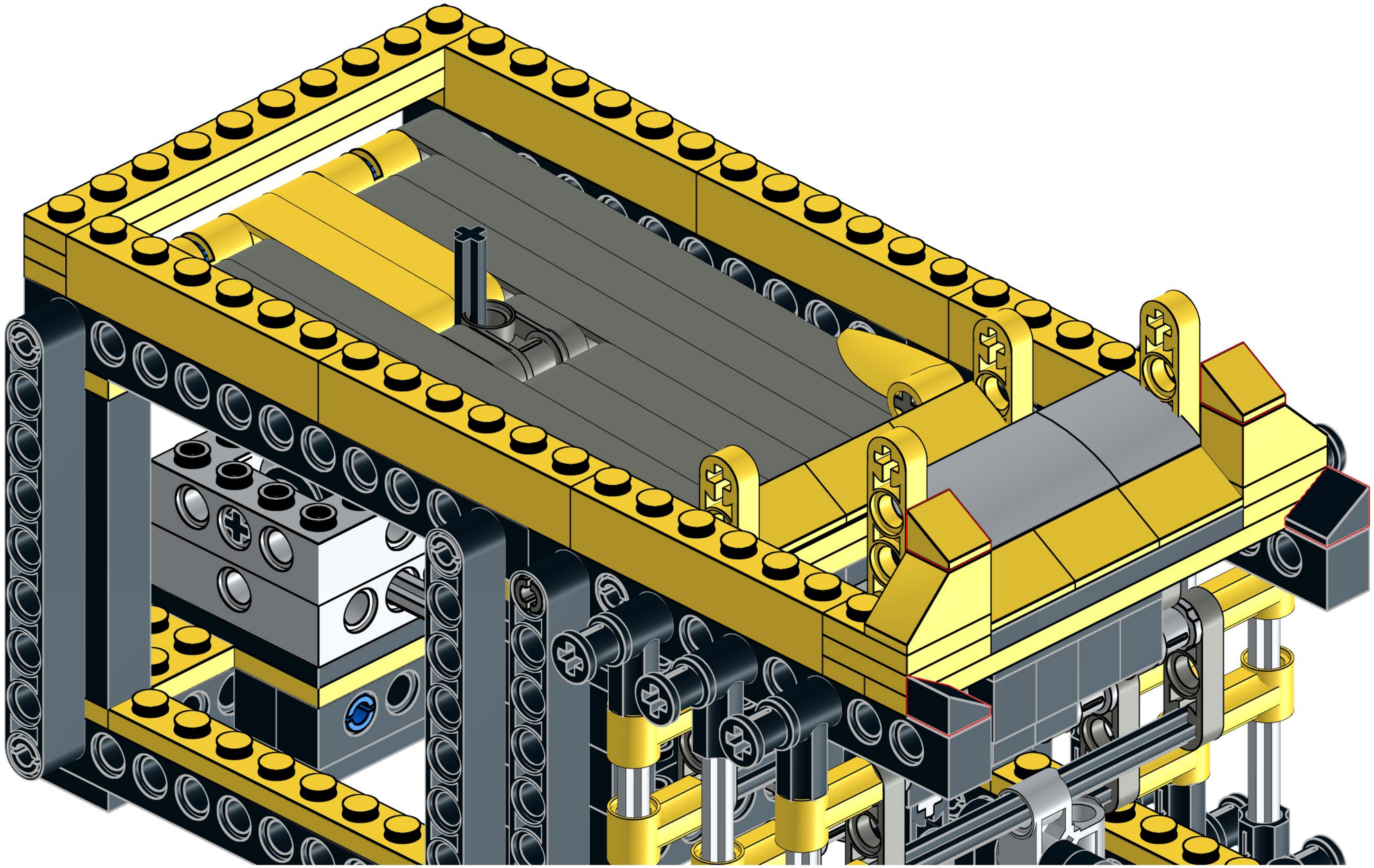

# 113

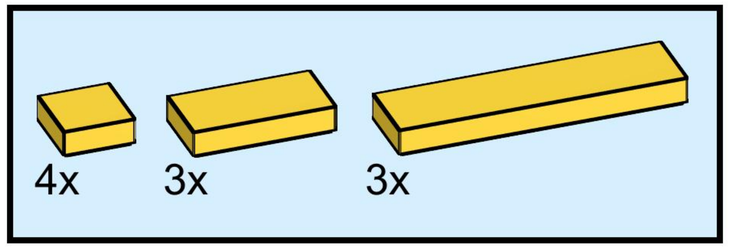


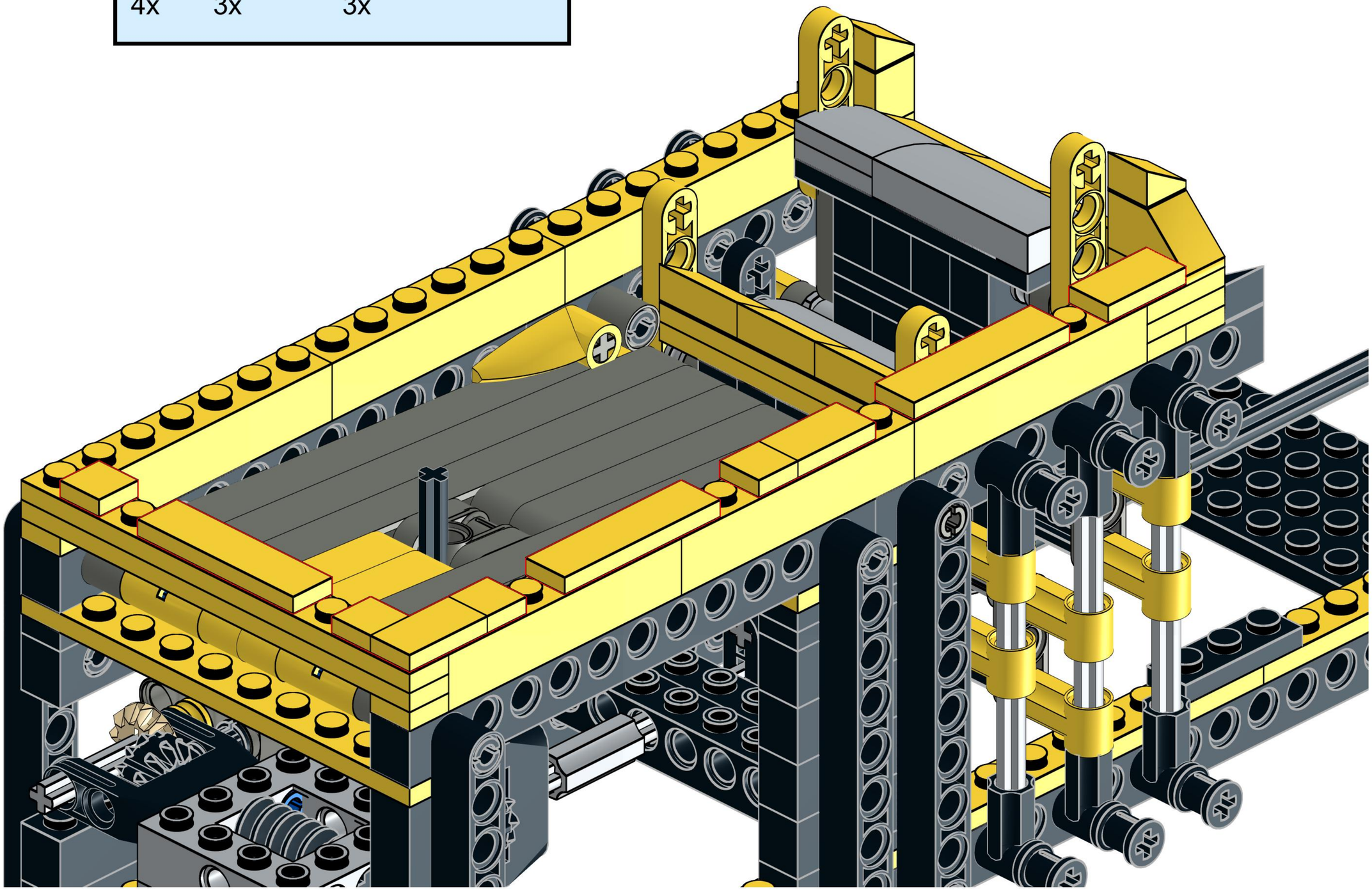

# 114

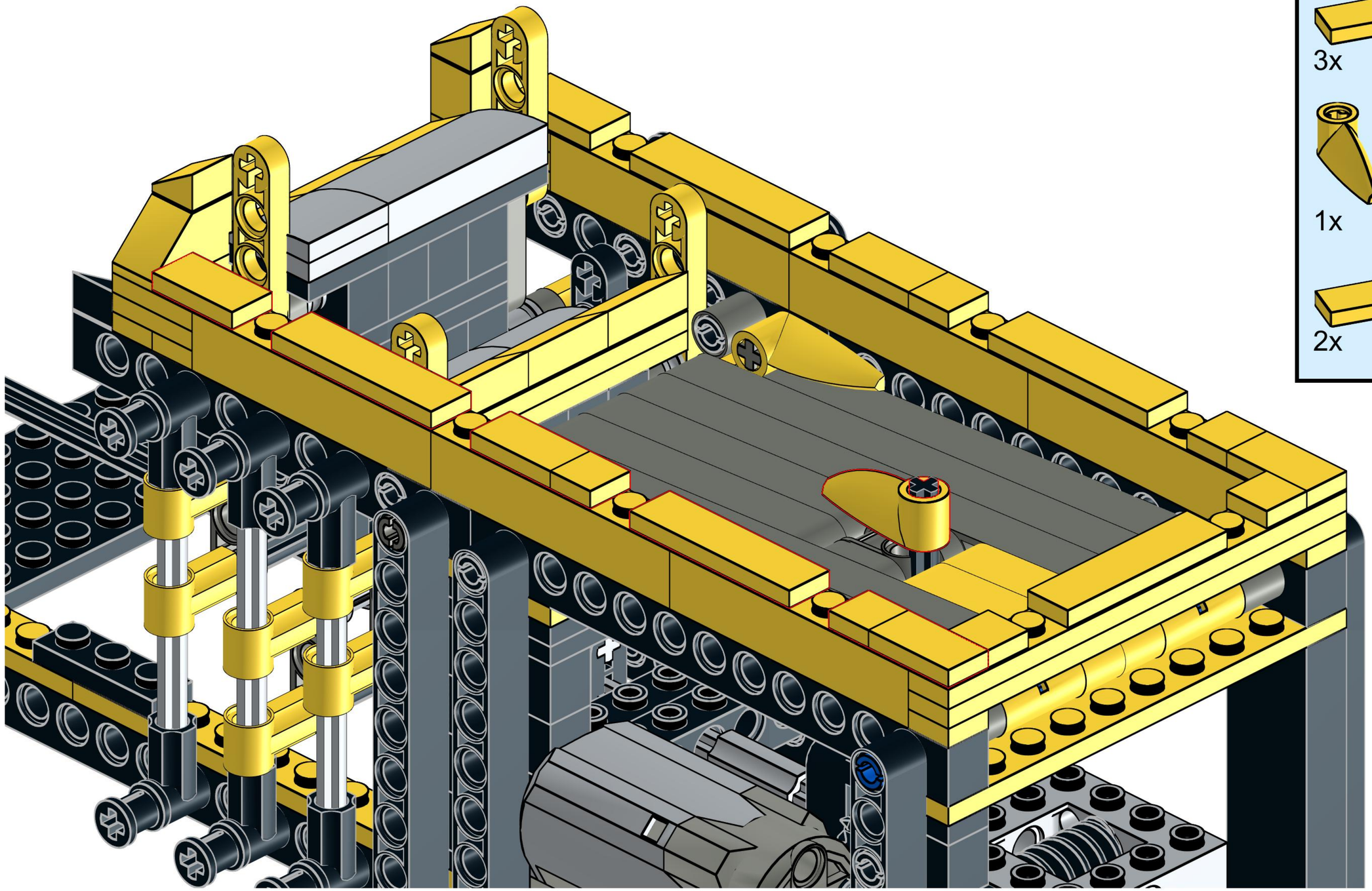

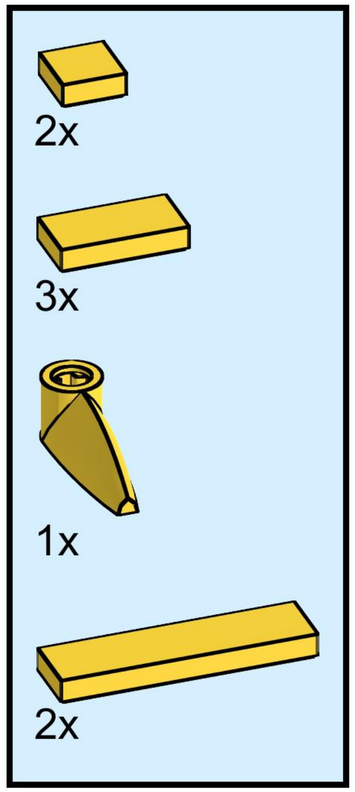

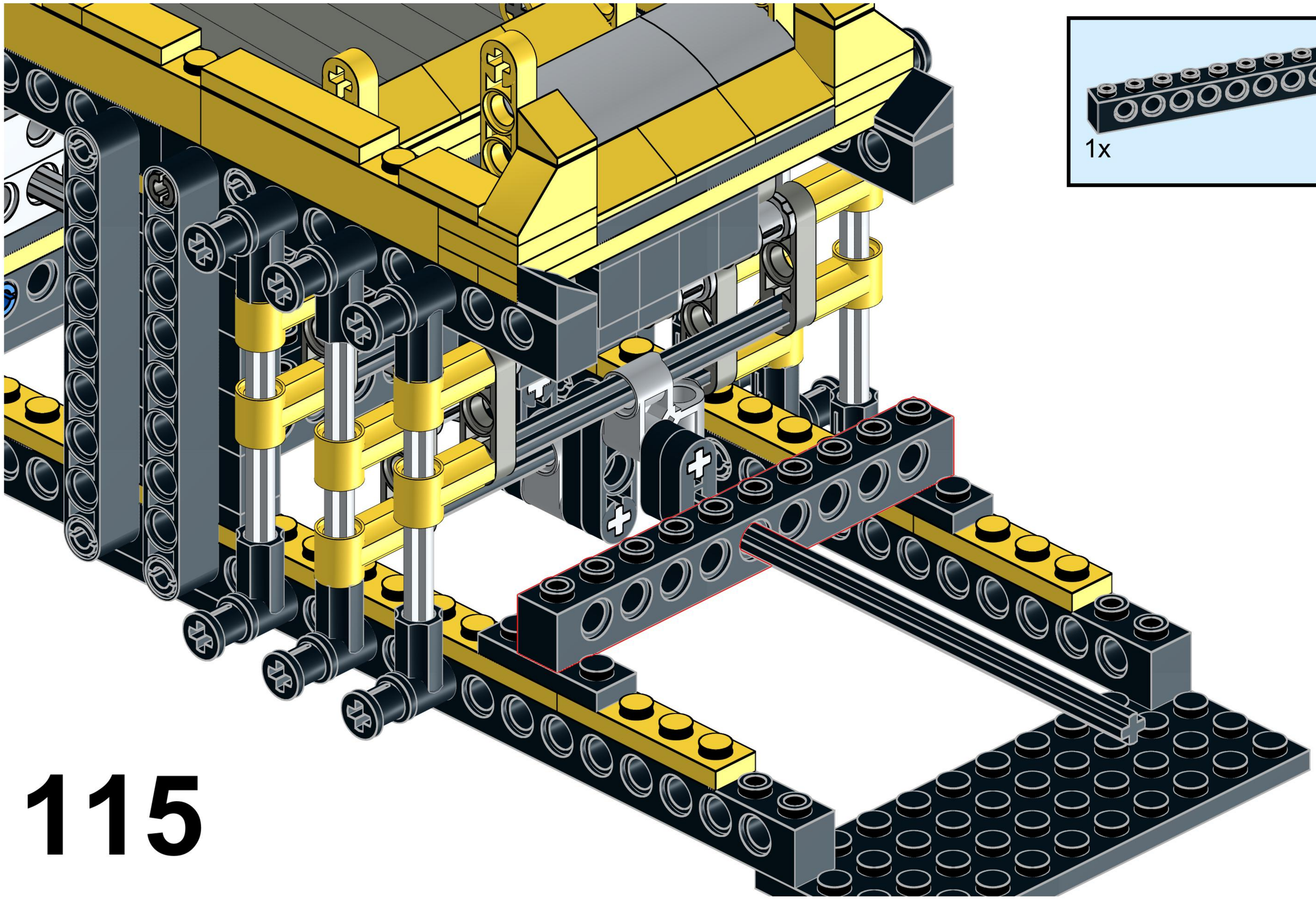

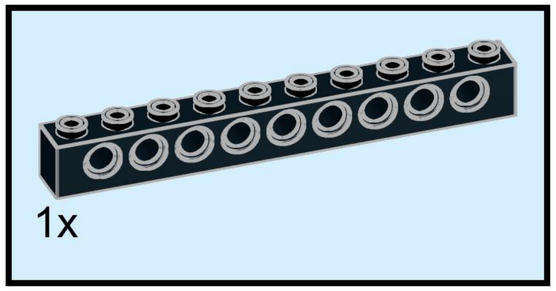
1x

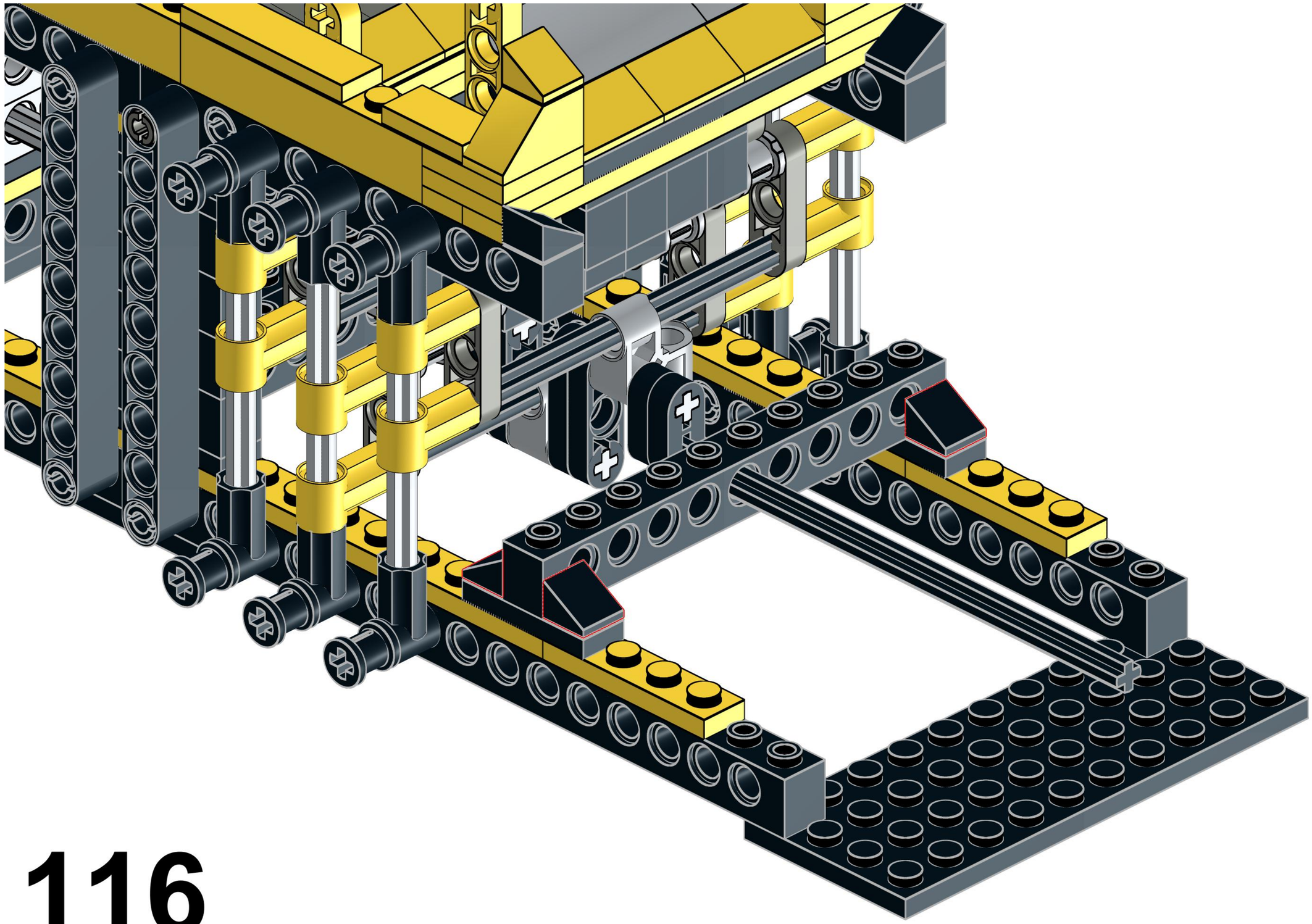

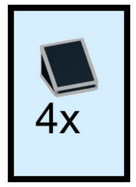


116

# 117

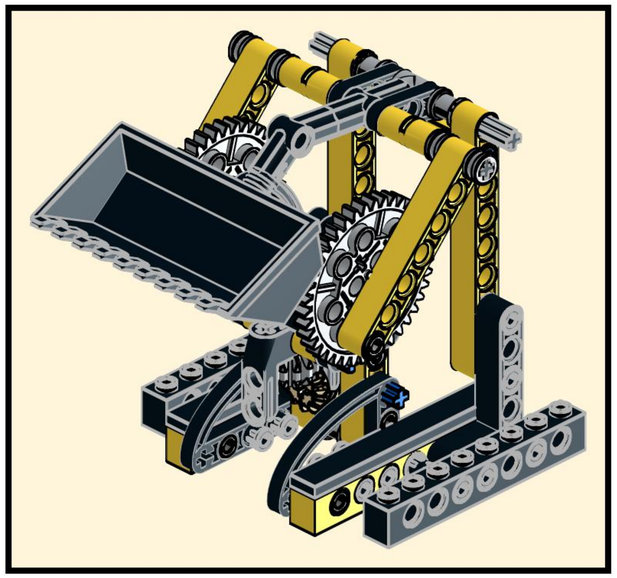

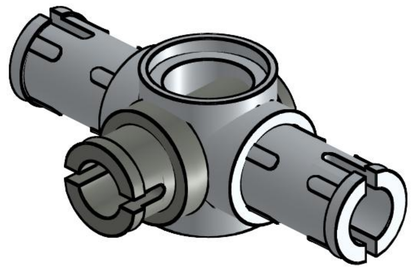

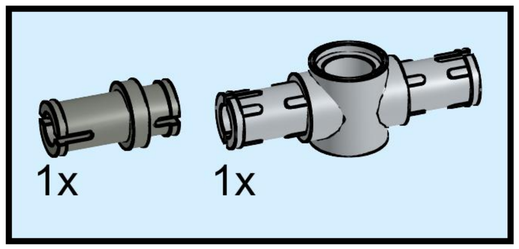

# 118

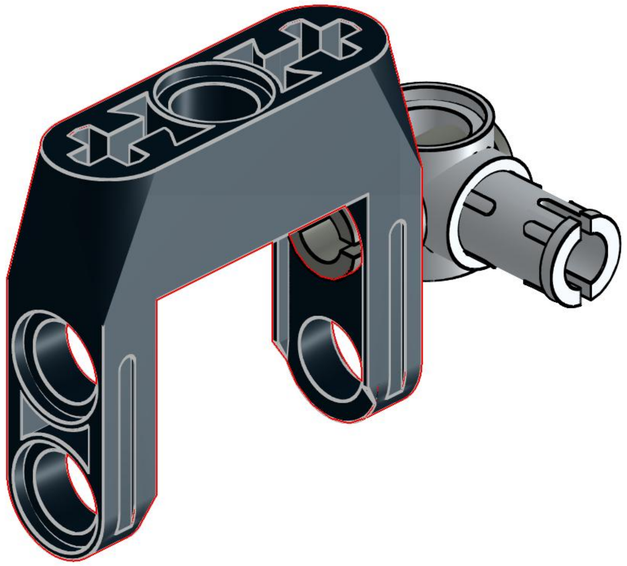

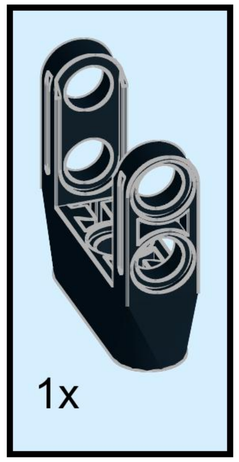

# 119

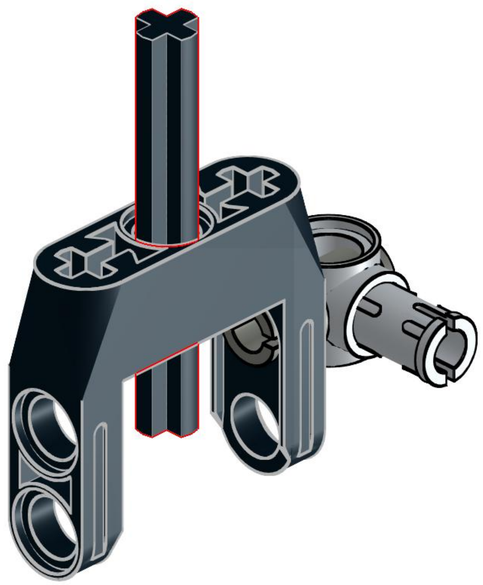

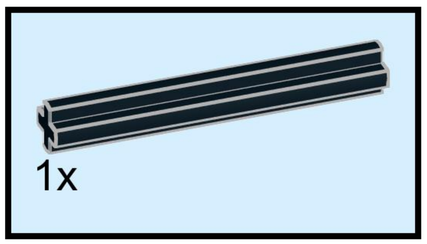

# 120

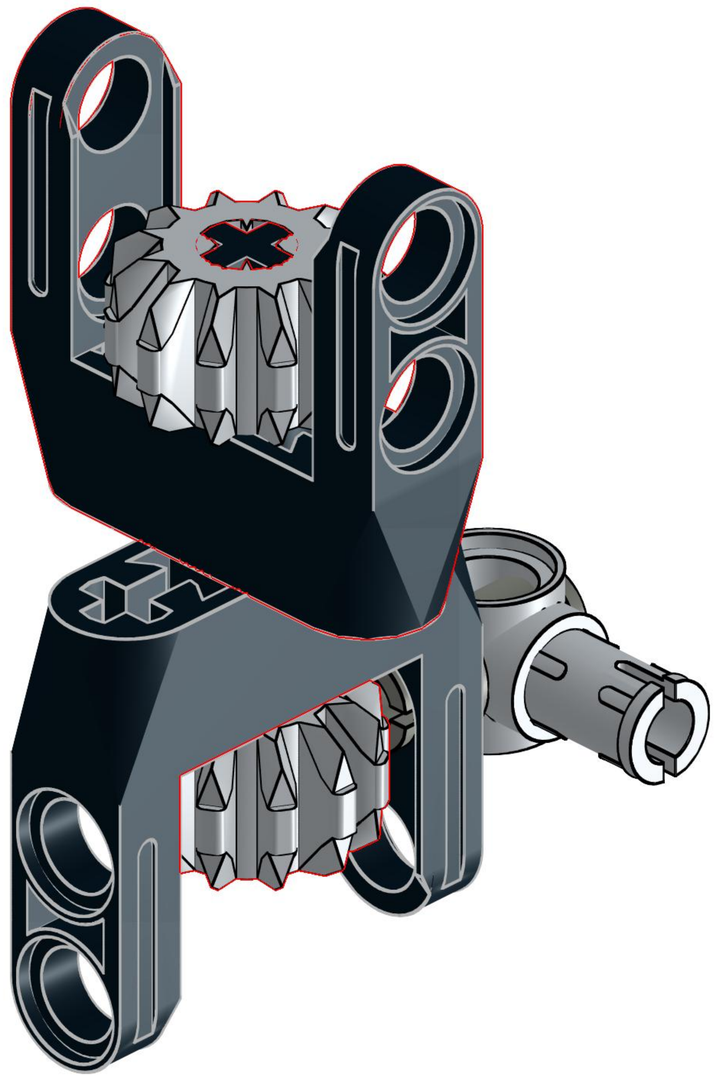

# 121

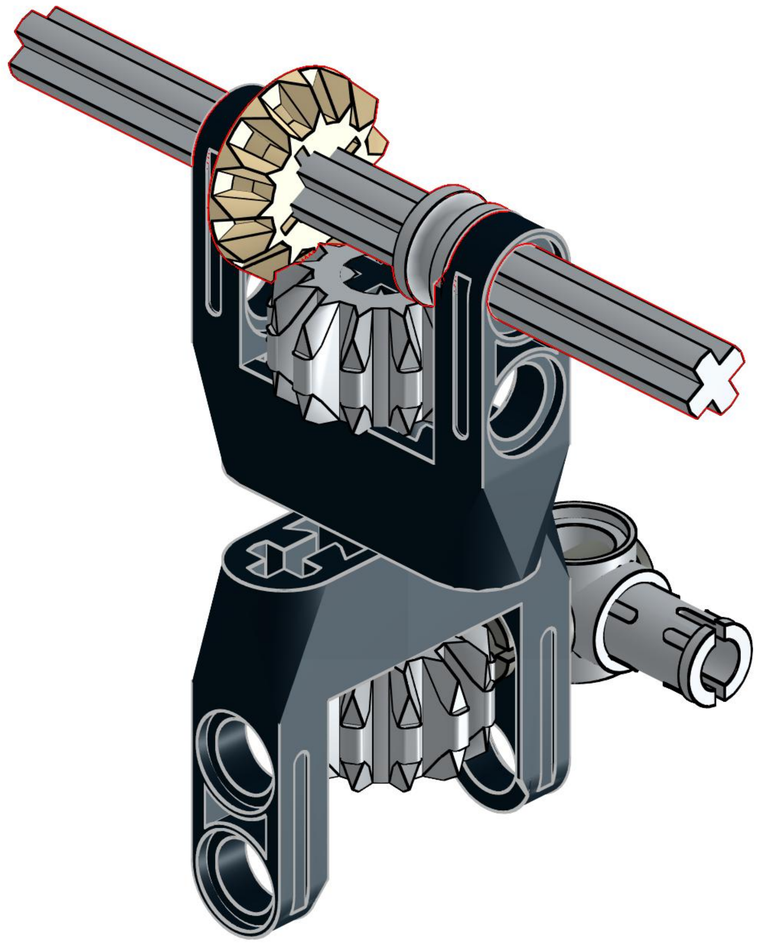

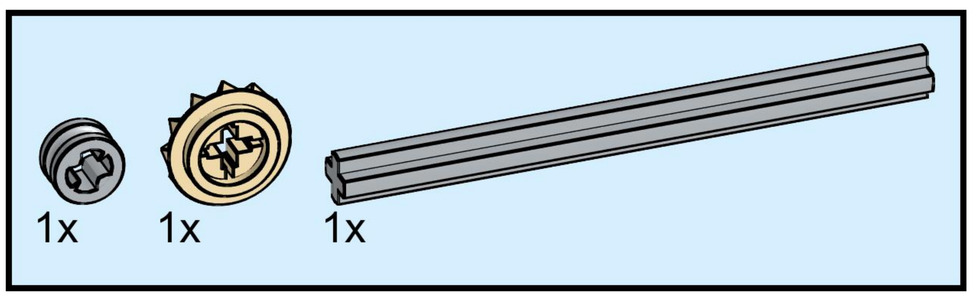

# 122

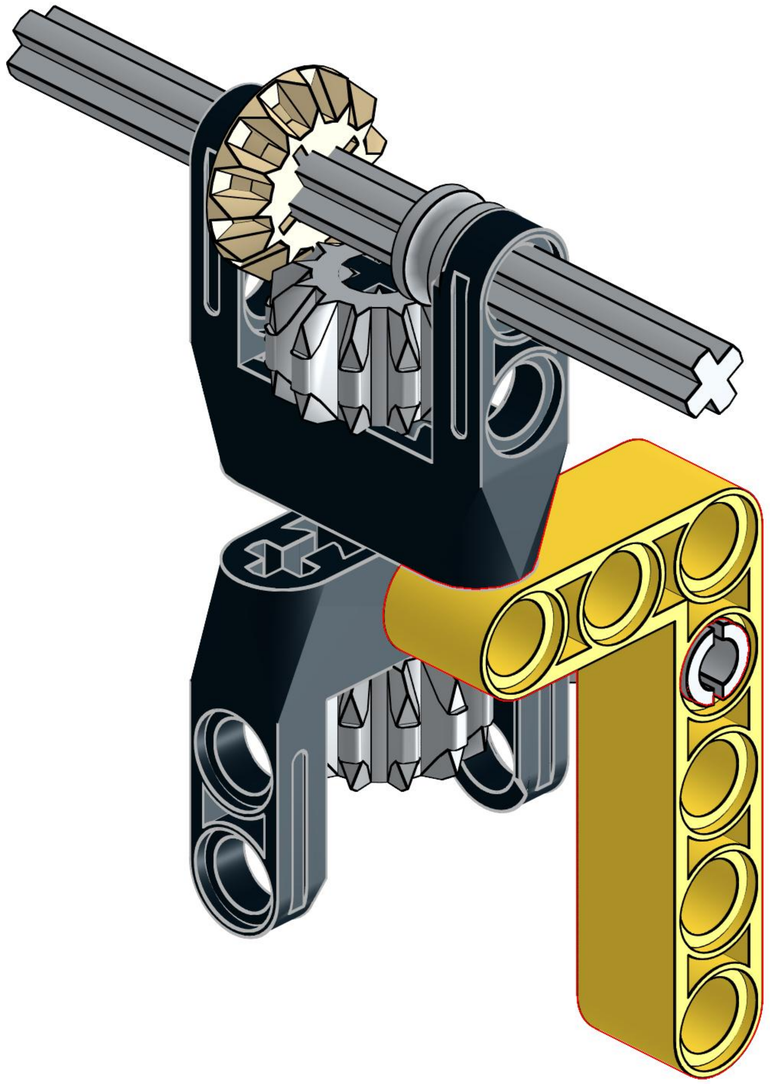

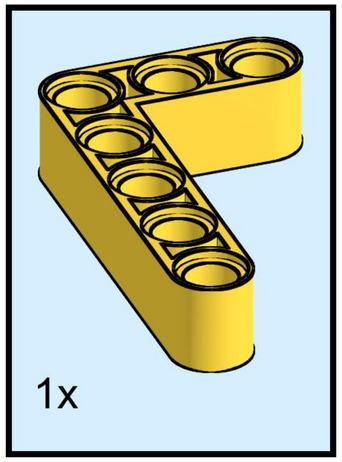

# 123

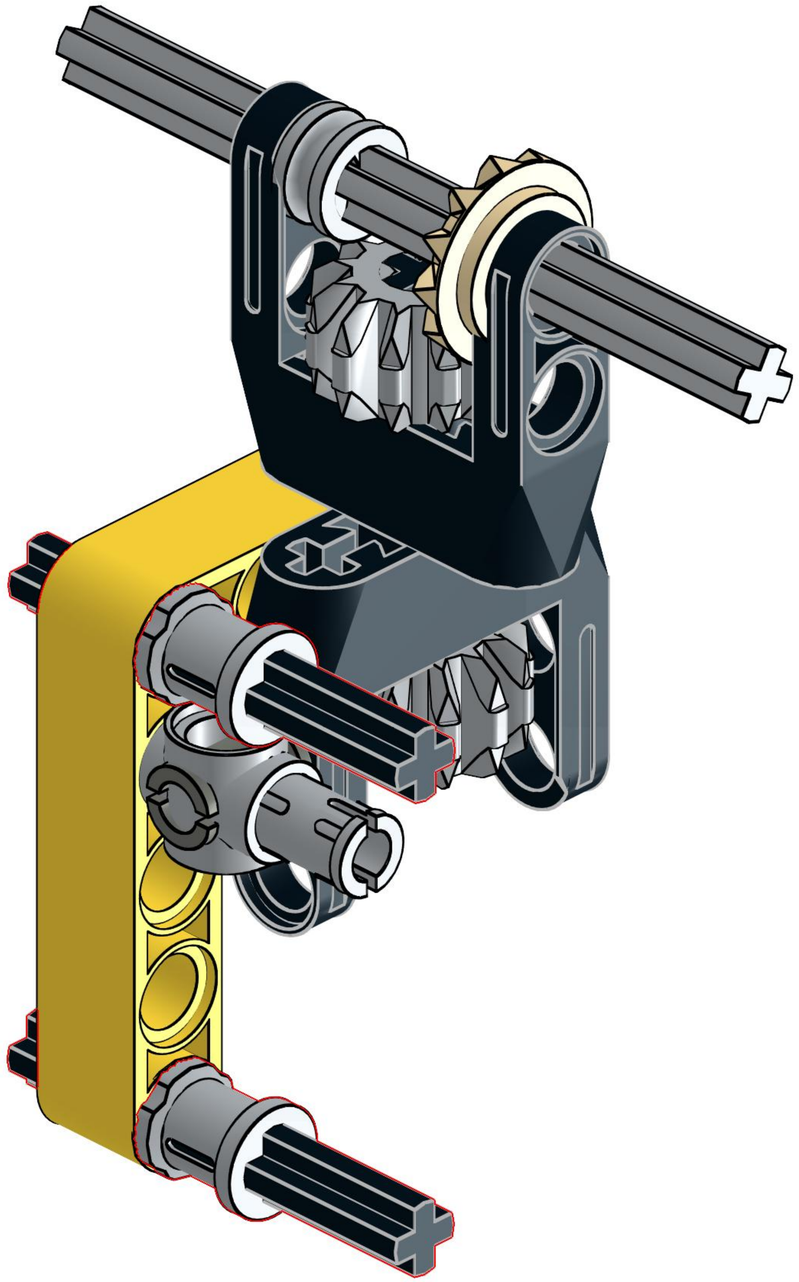

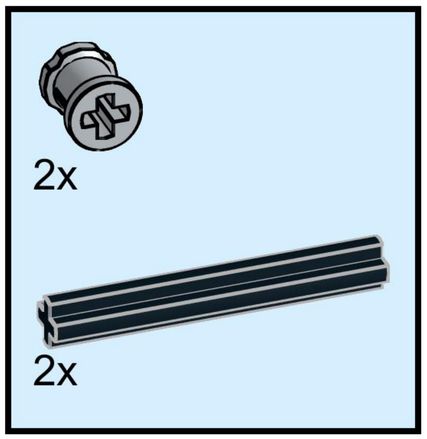

# 124

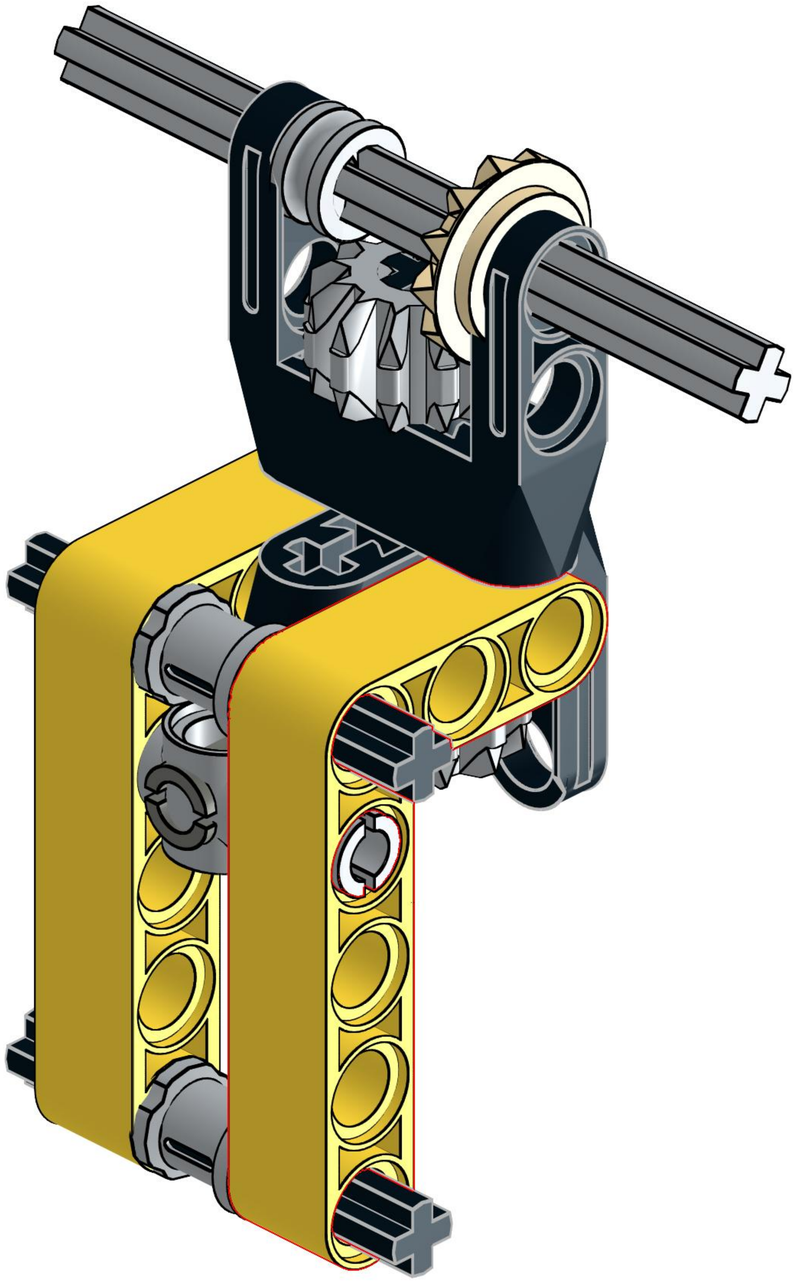

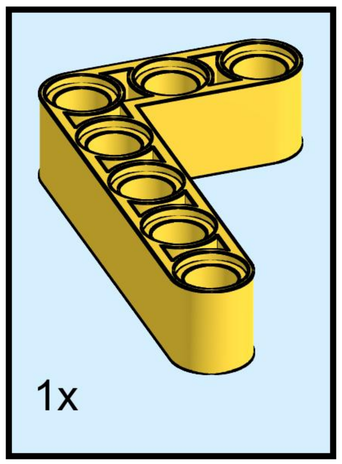

# 125

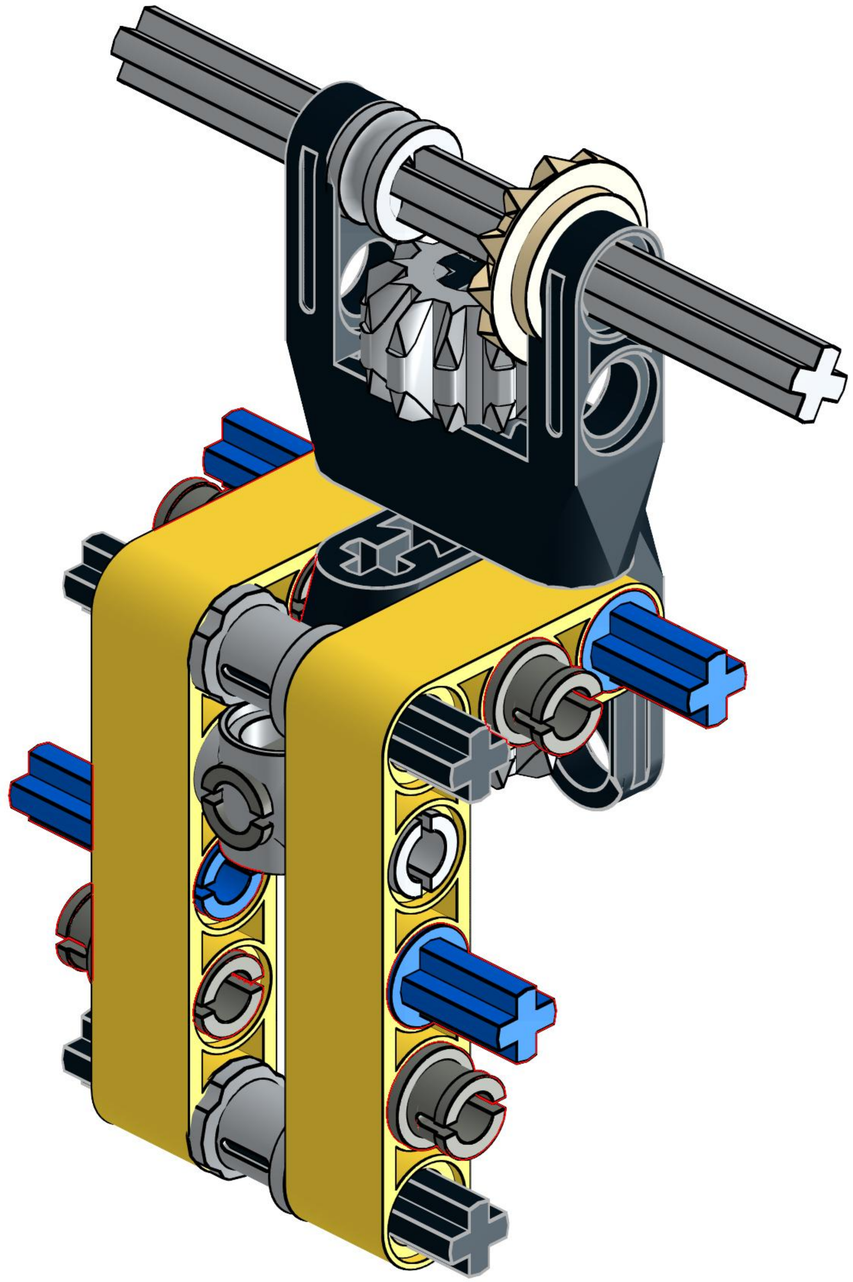

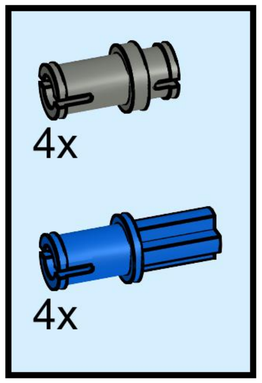

# 126

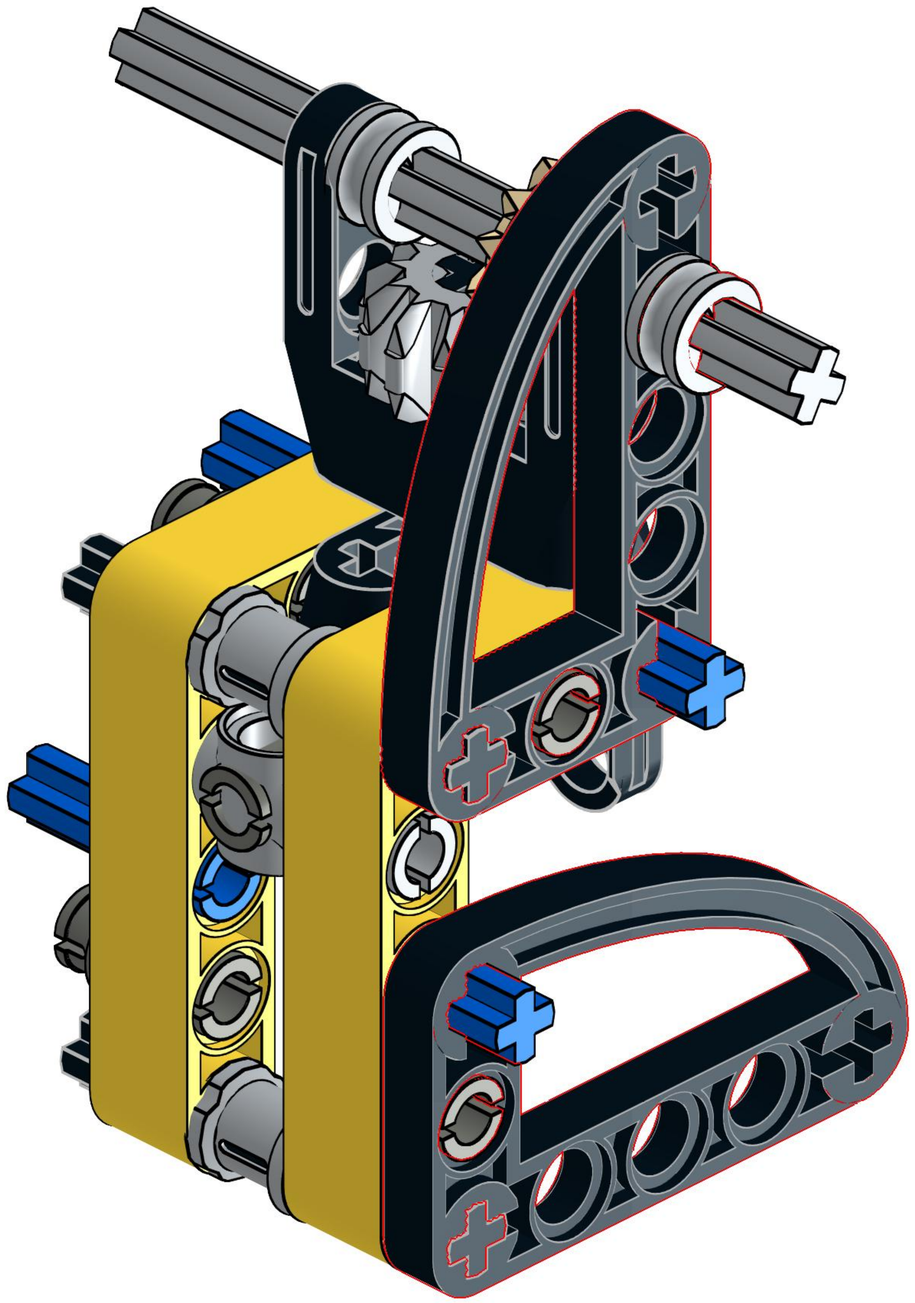

# 127

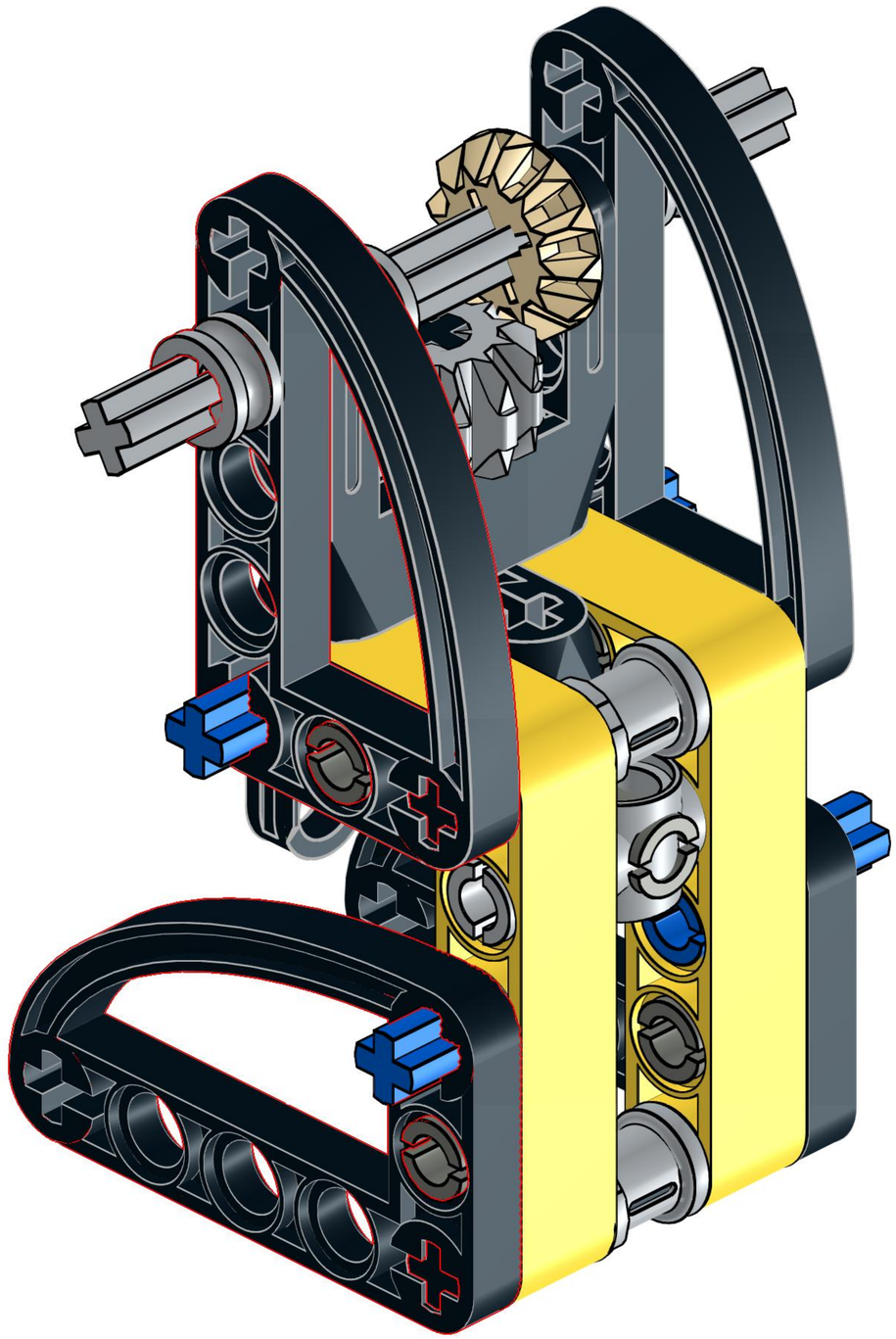

# 128

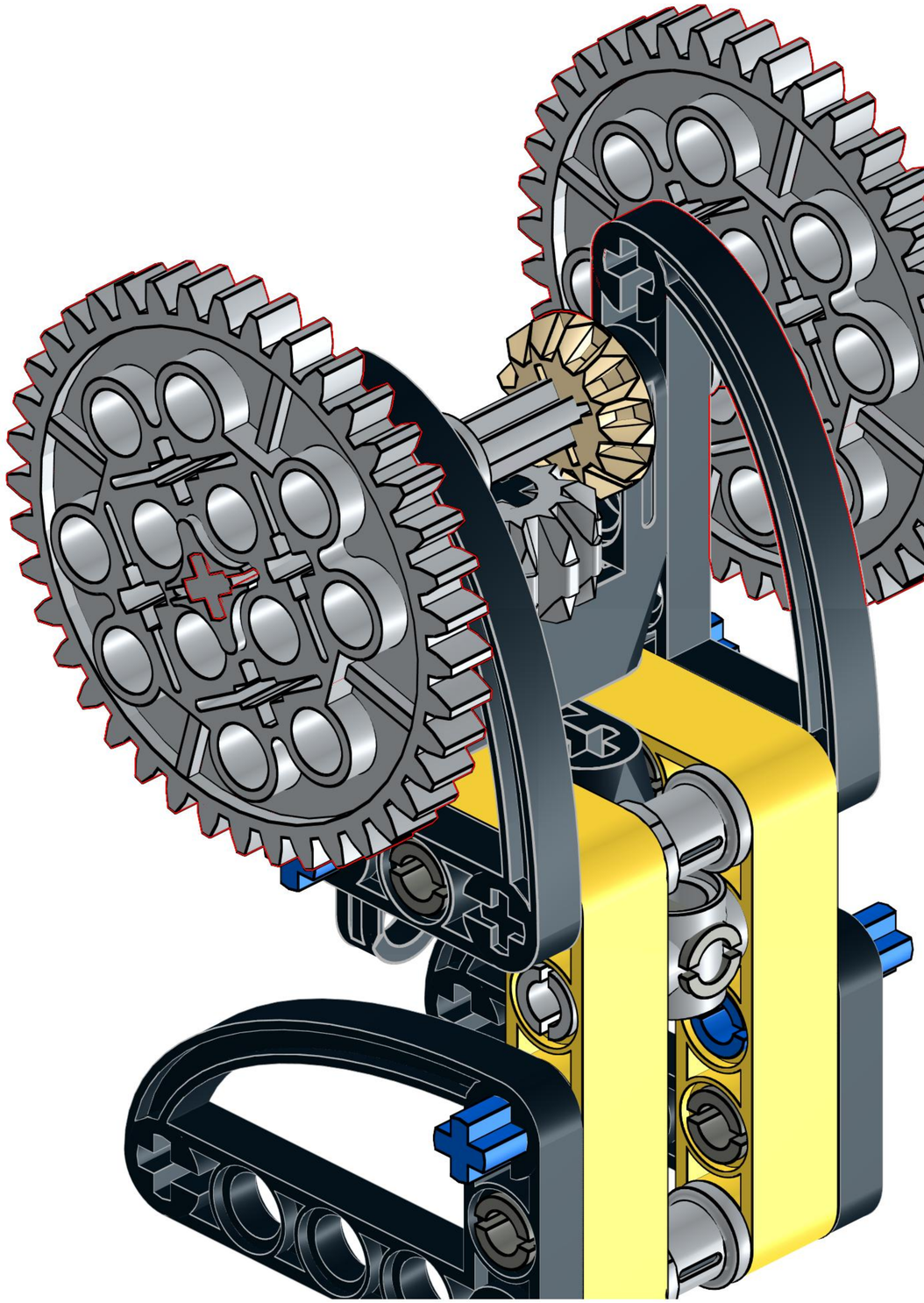

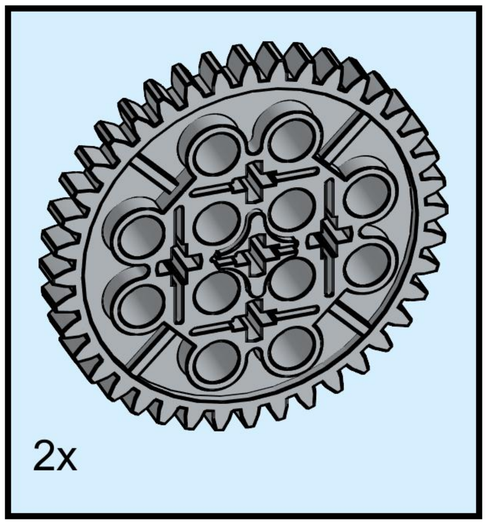

# 129

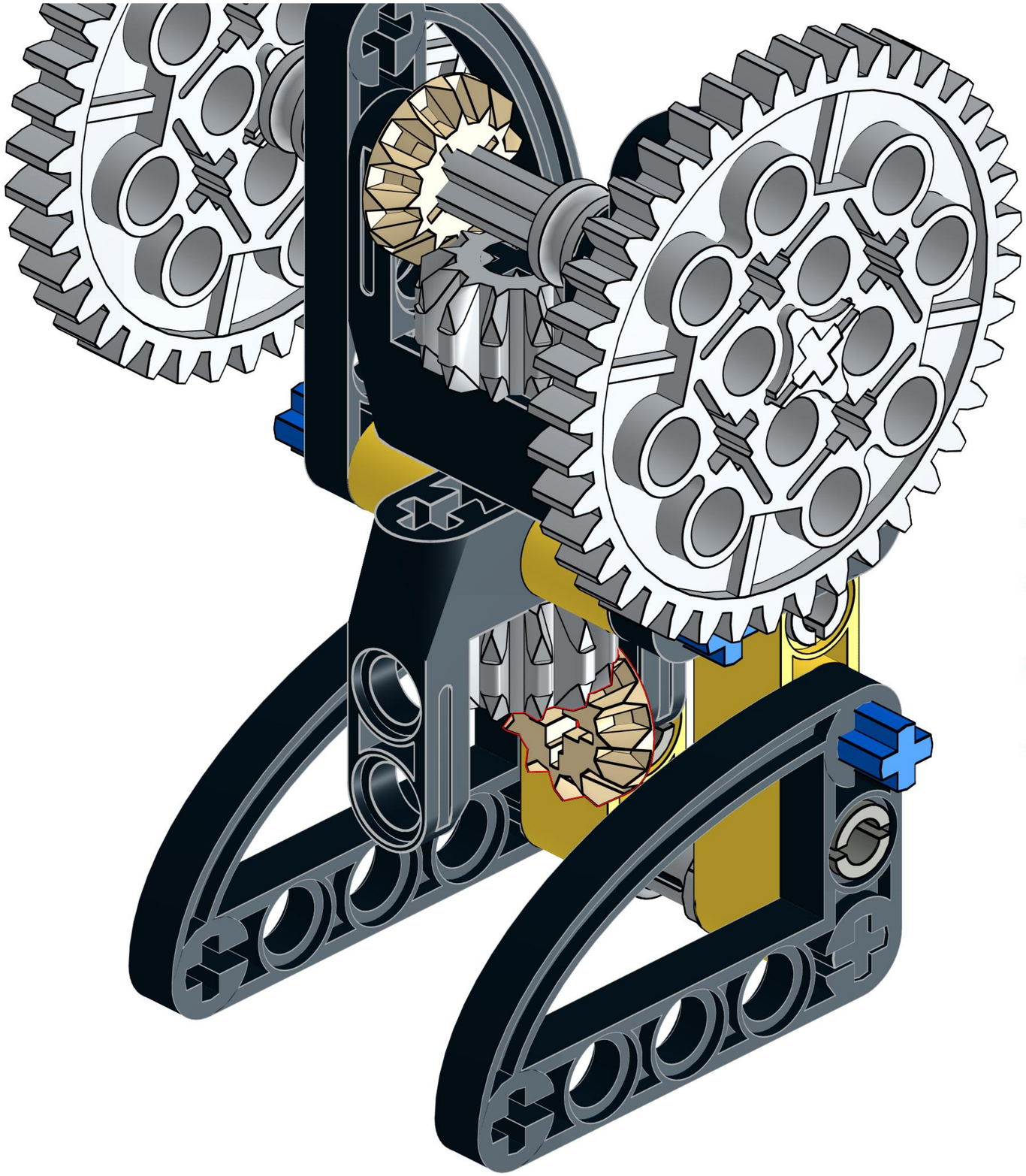

The main drive shaft will be inserted into this gear, extending past the connector by 1L

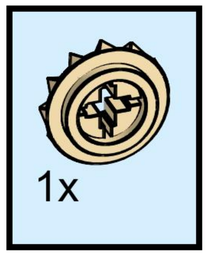

# 130

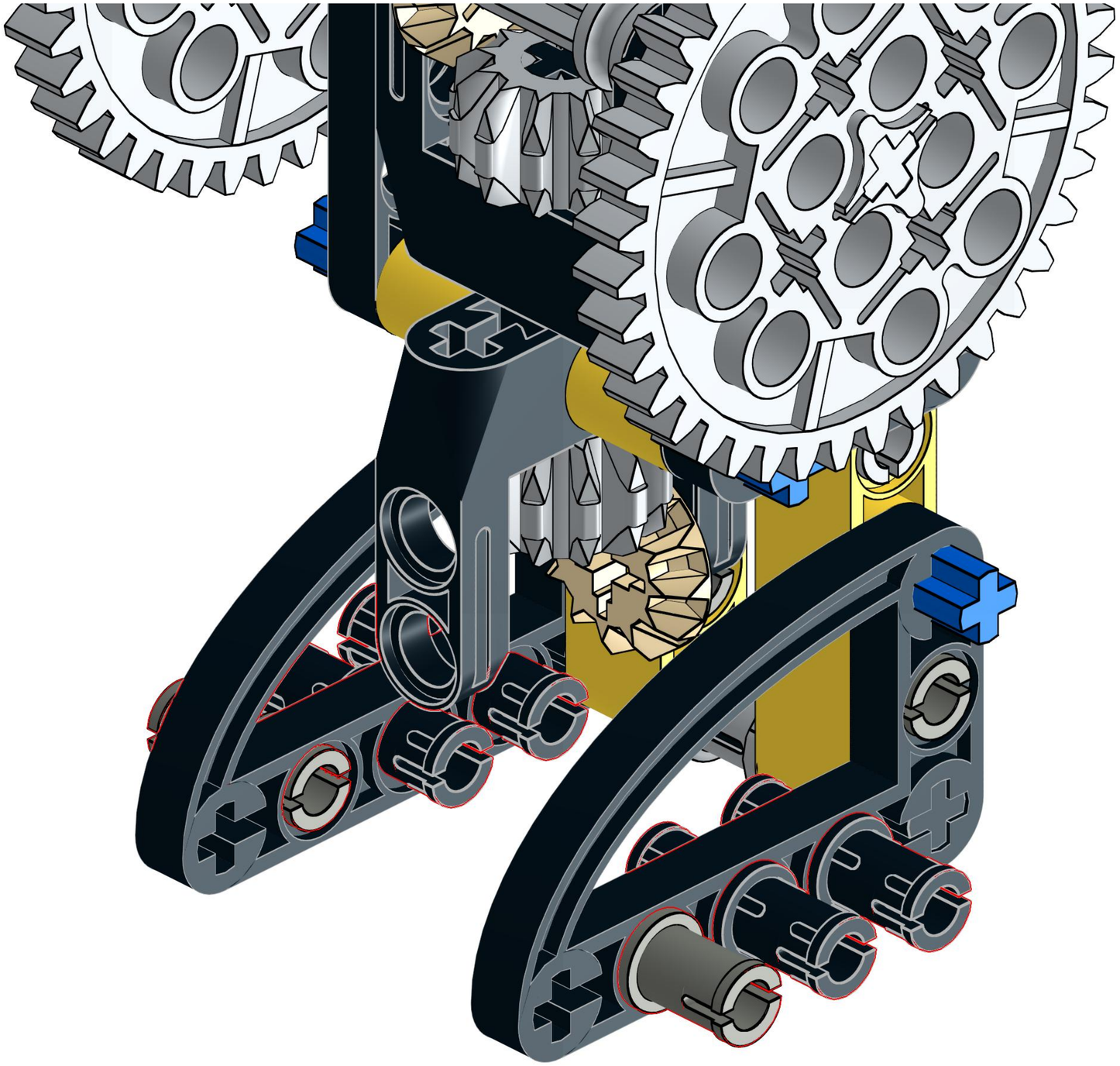

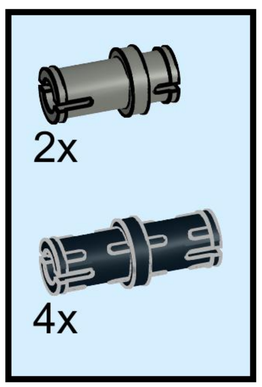

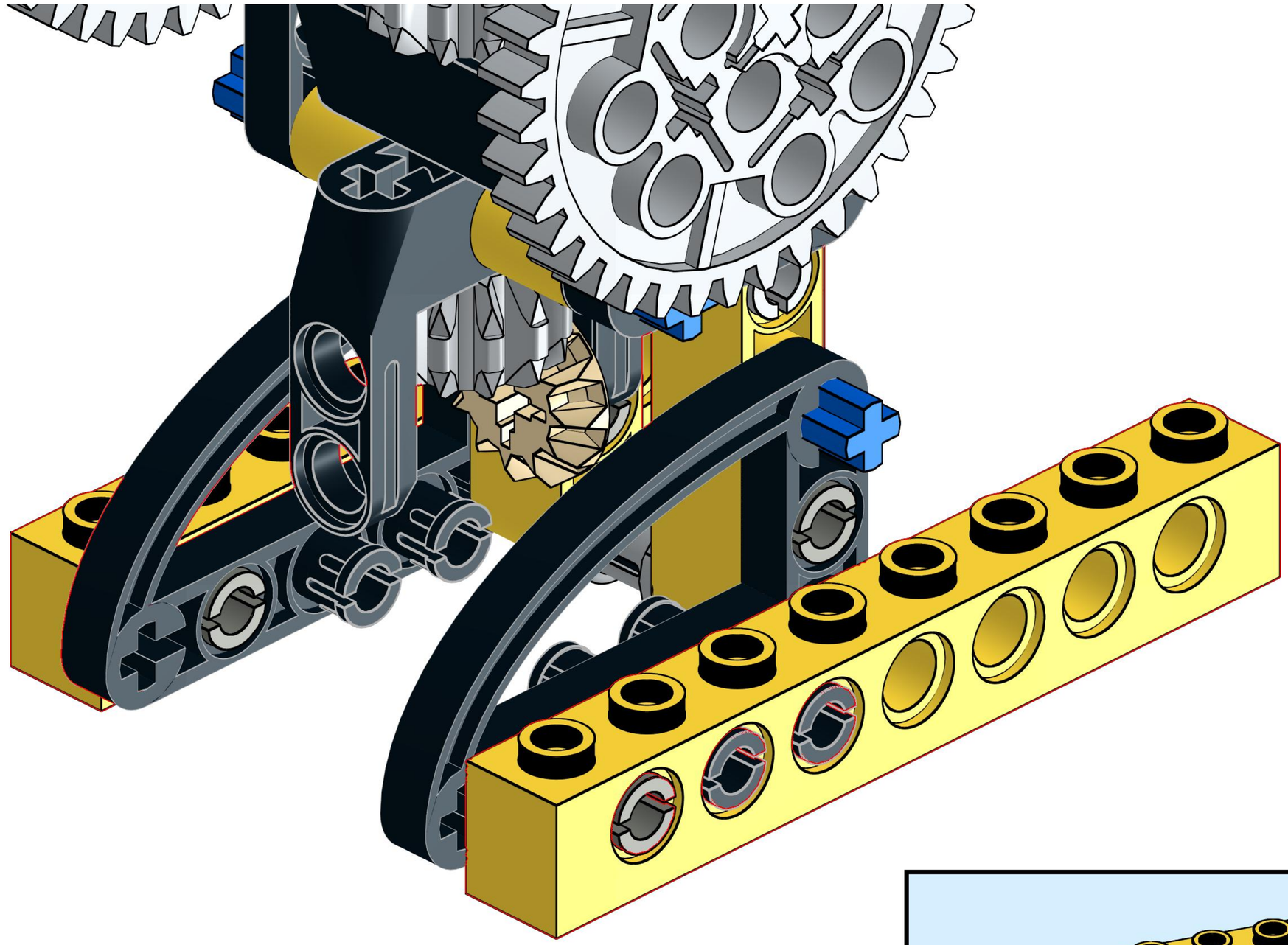

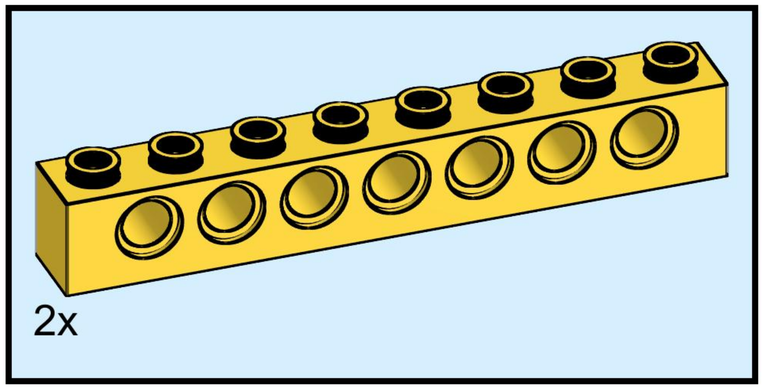
2x

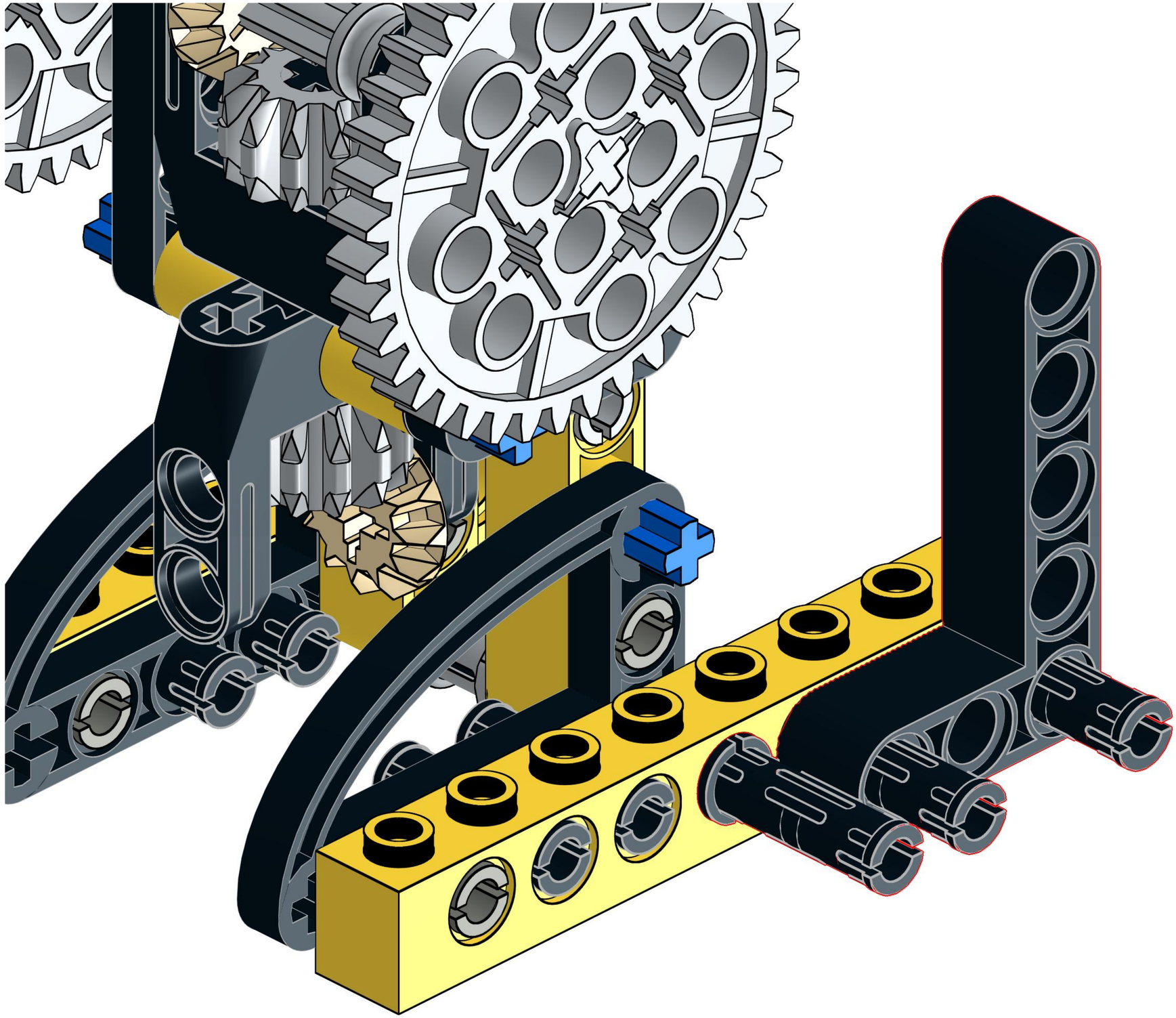

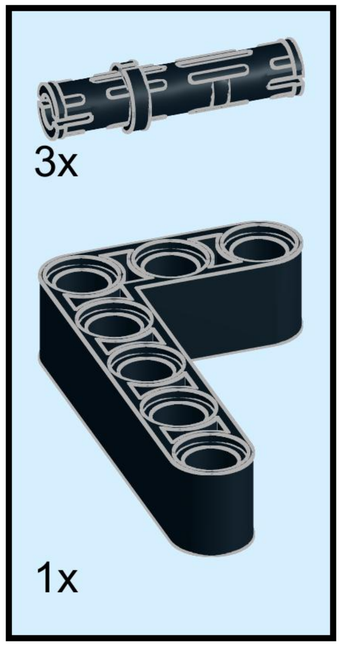
3x
1x

# 133

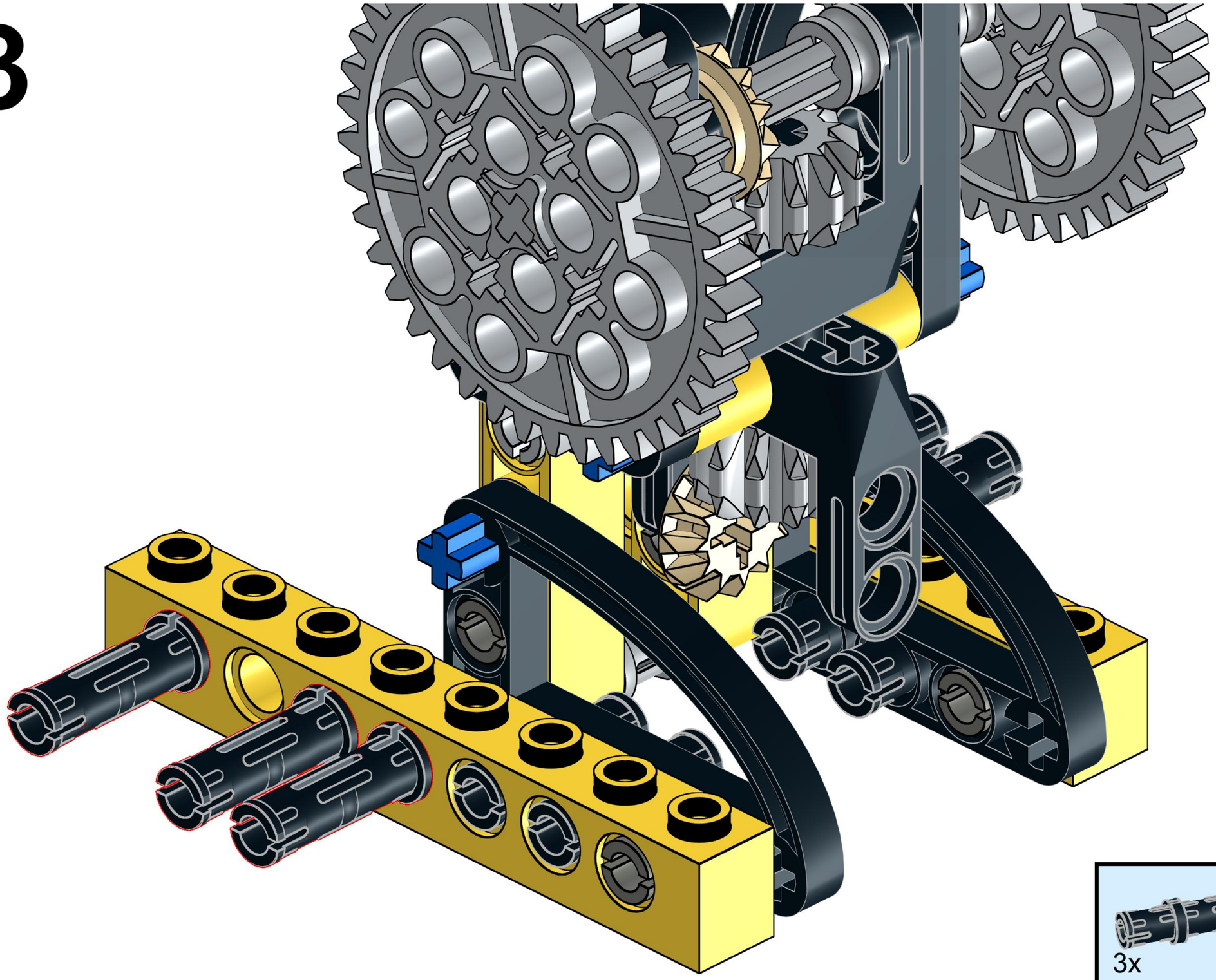

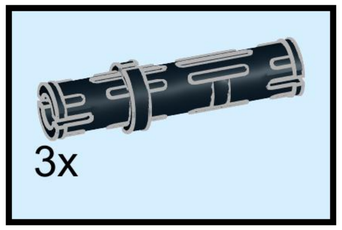

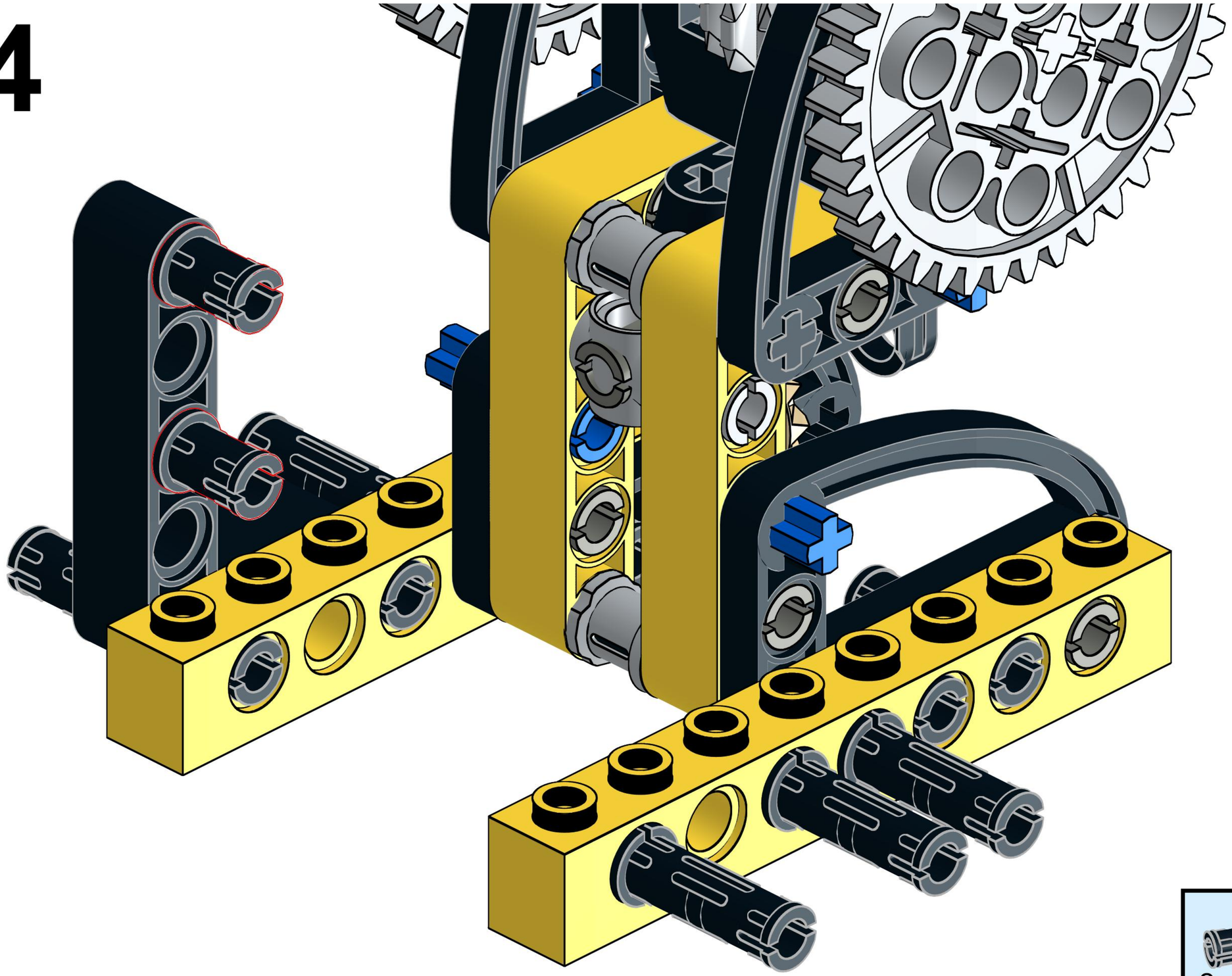

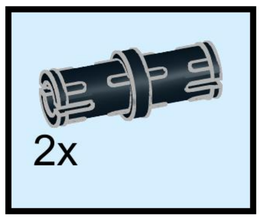
2x

# 135

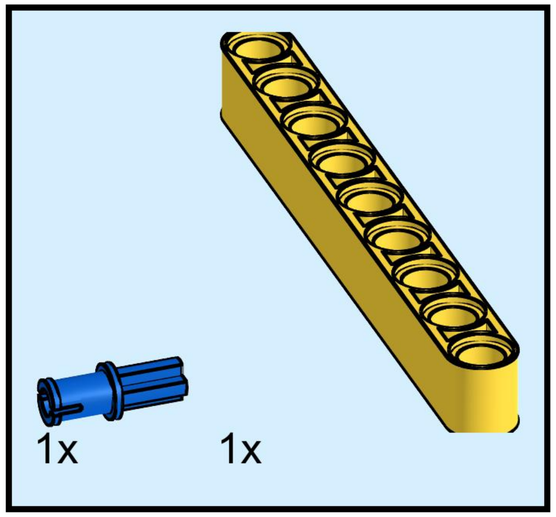


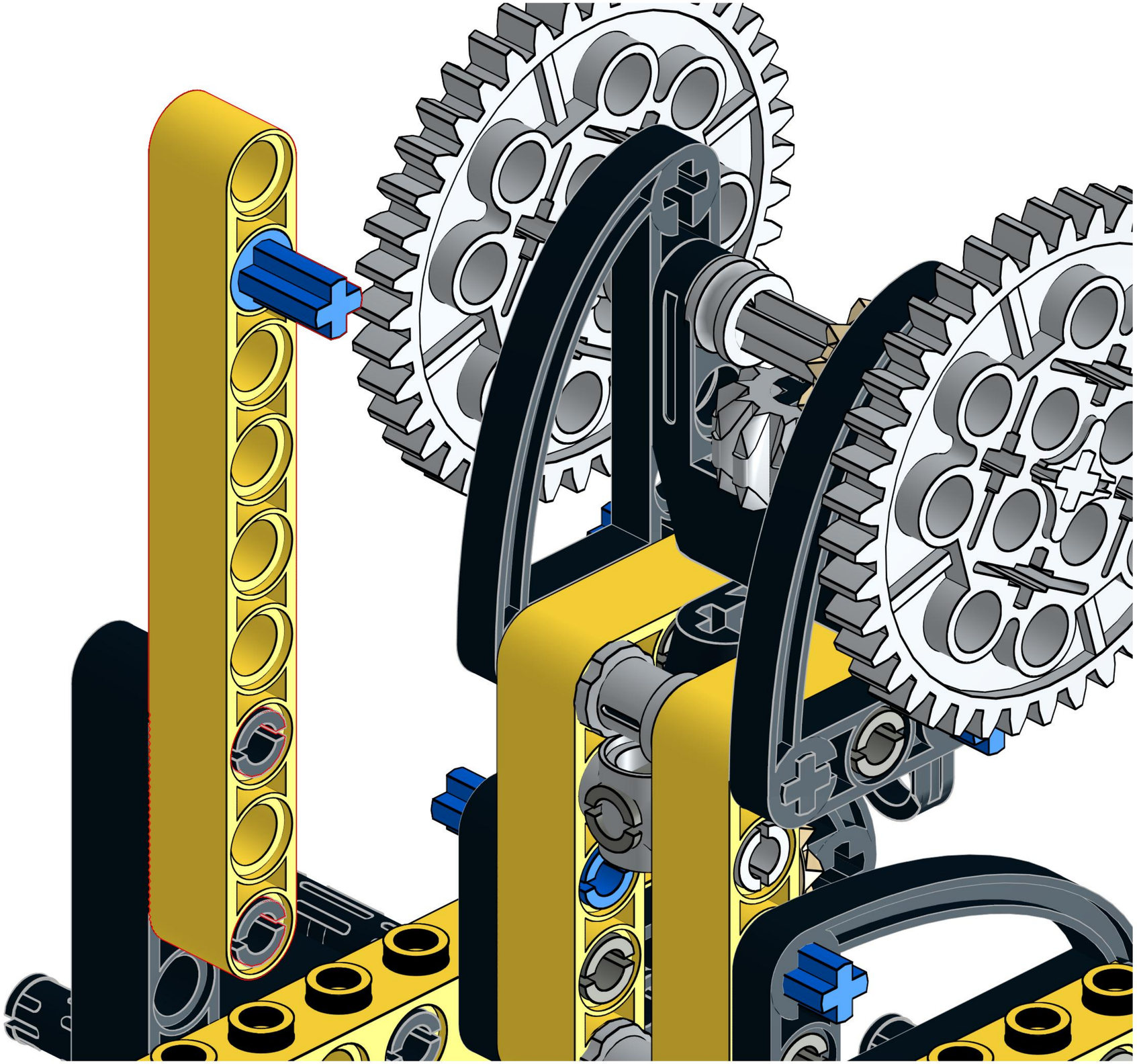

# 136

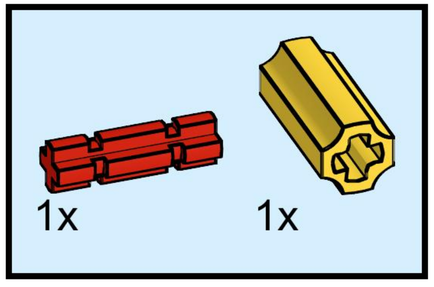

# 137

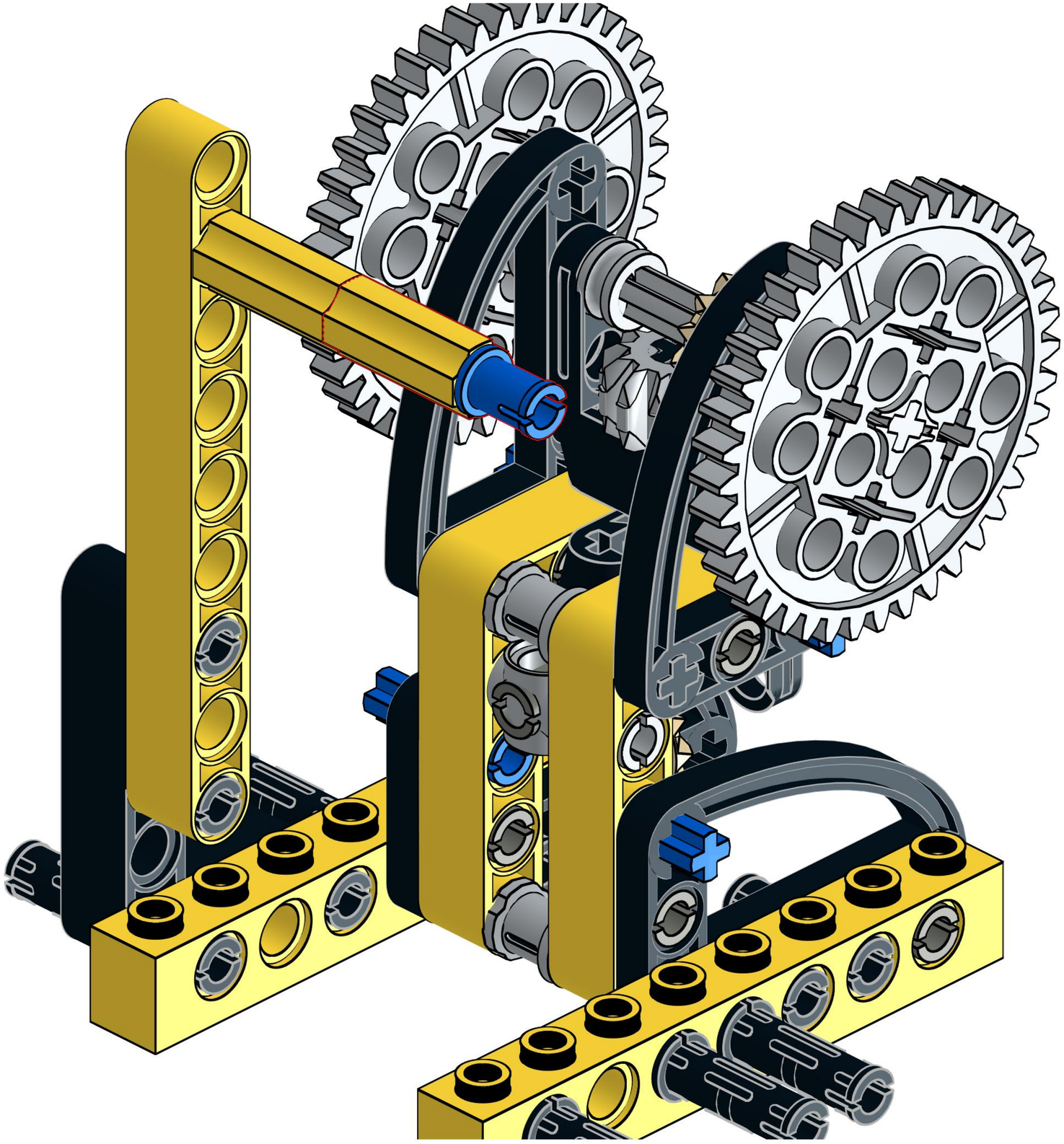

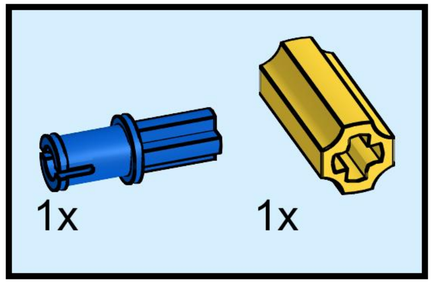

# 138

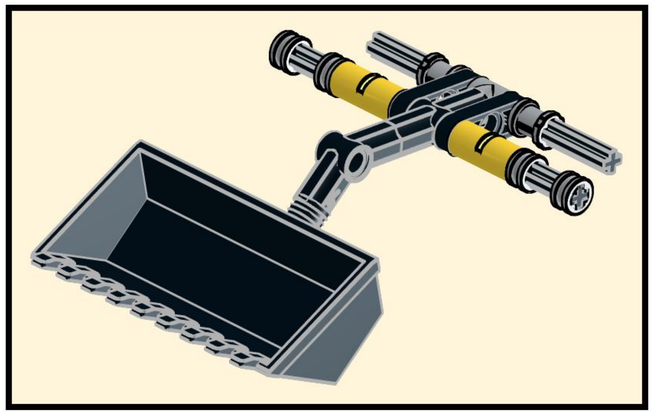

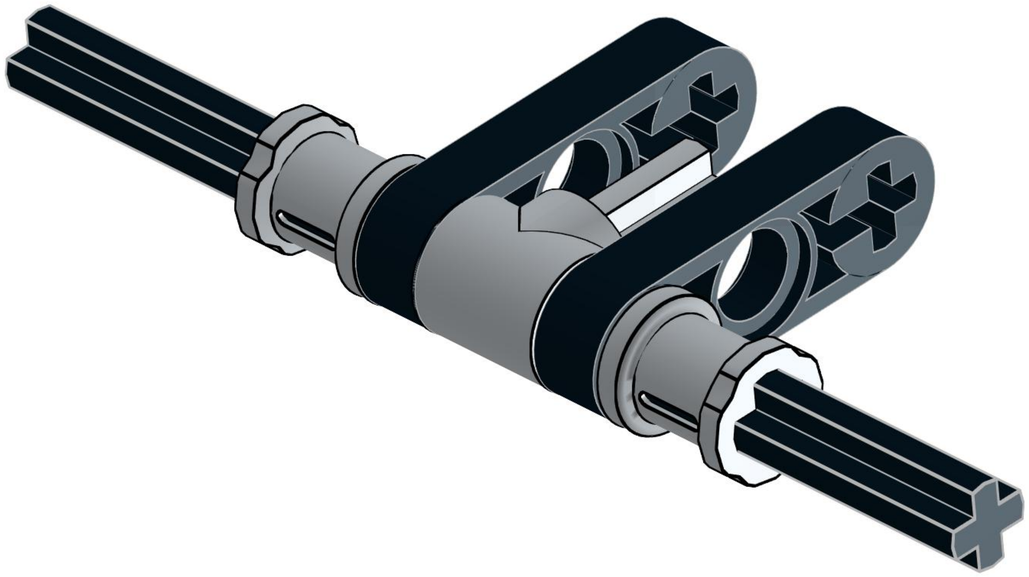

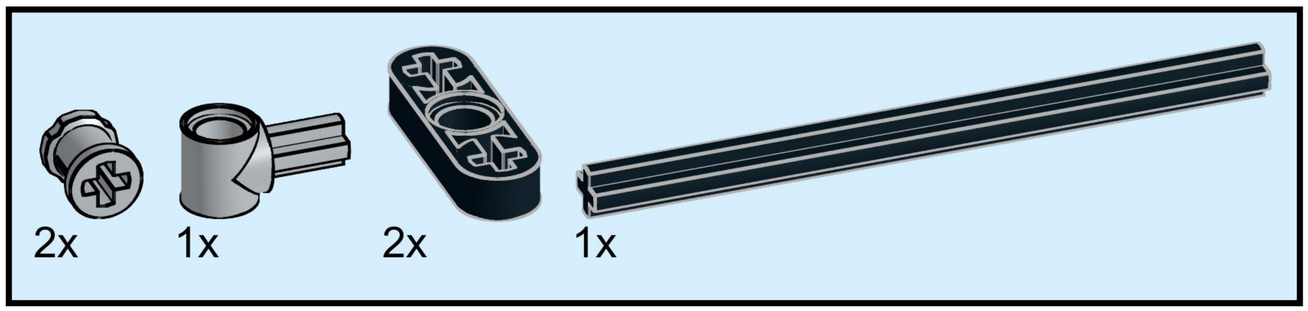

# 139

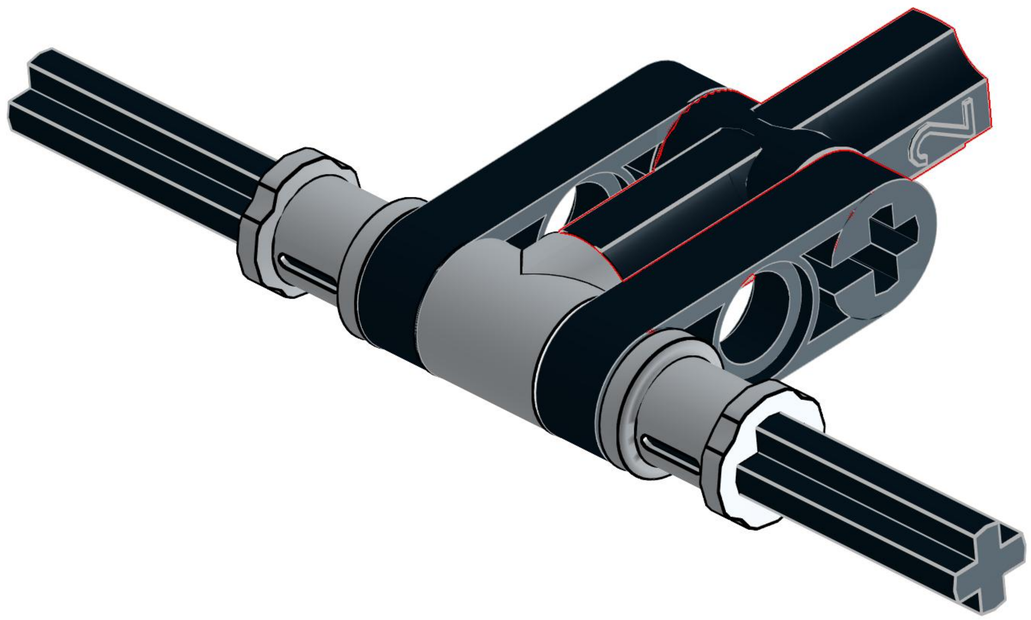

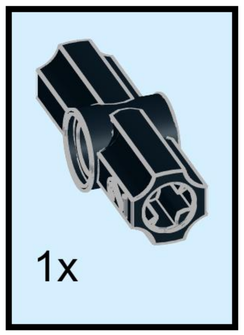

# 140

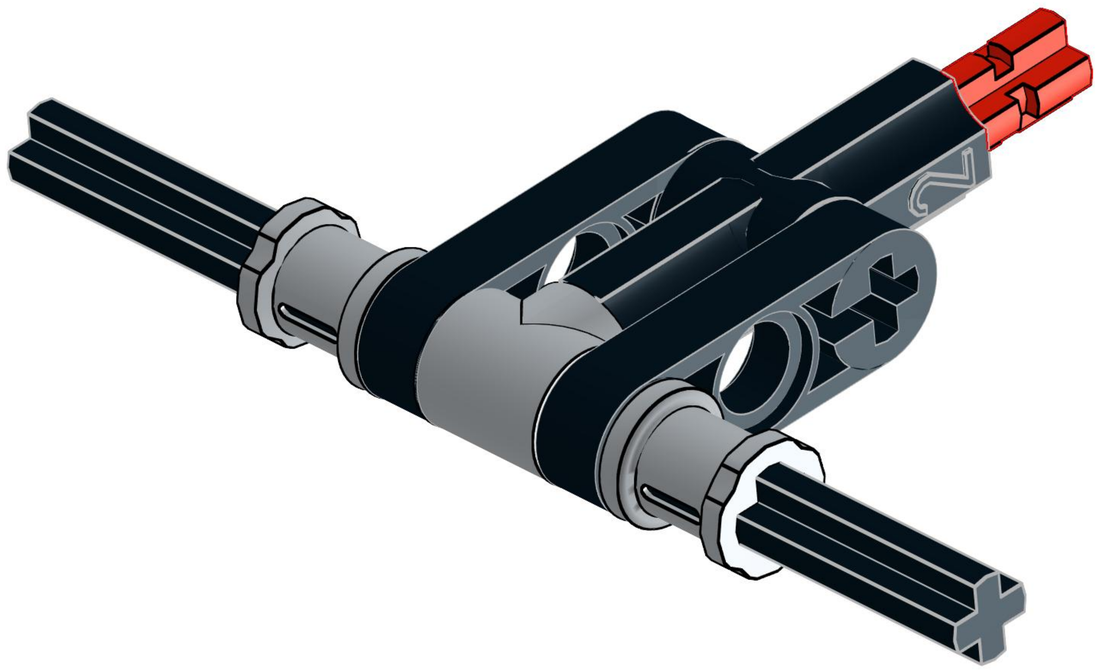

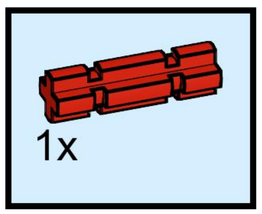

# 141

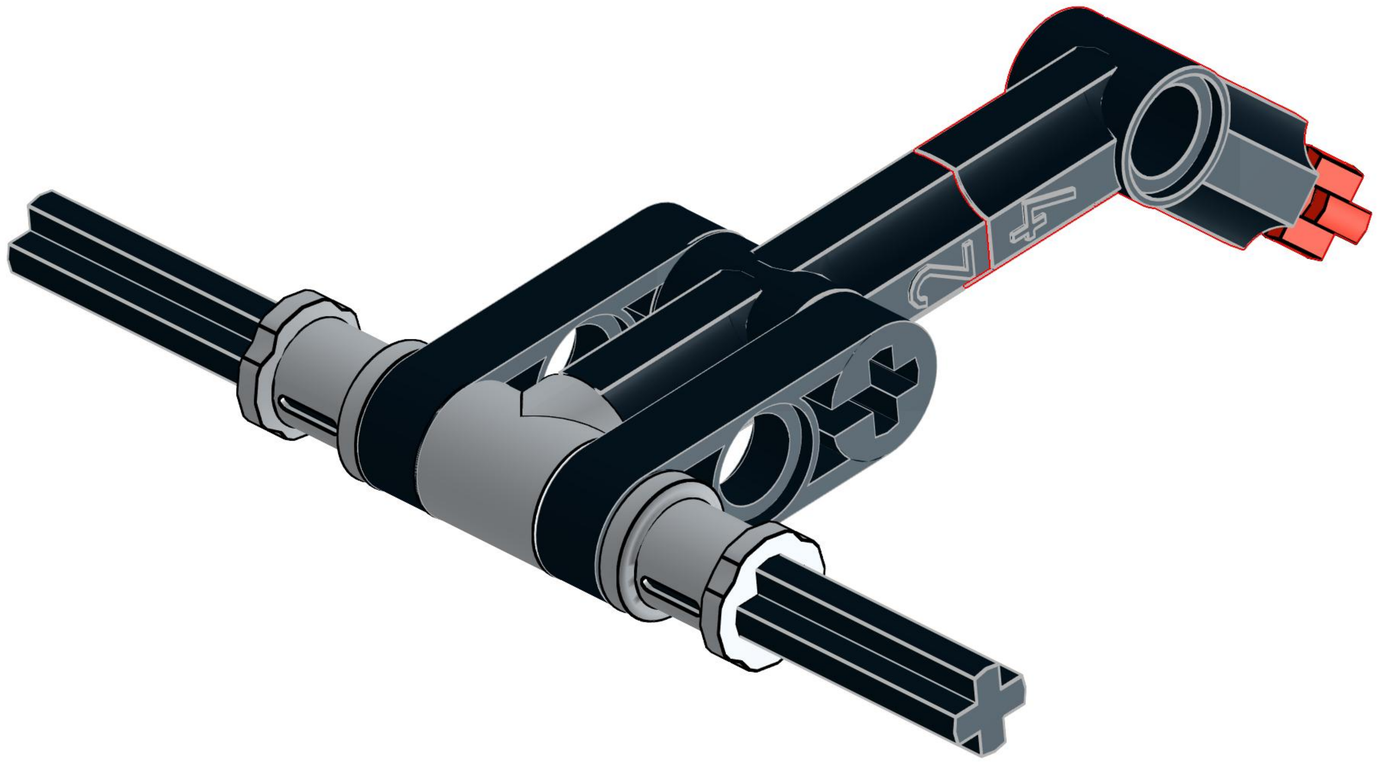

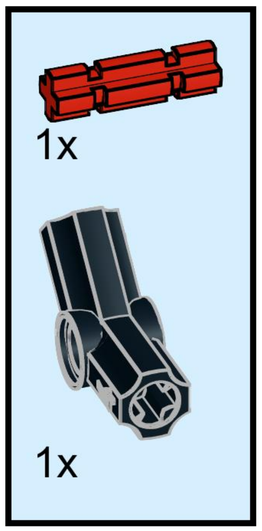

# 142

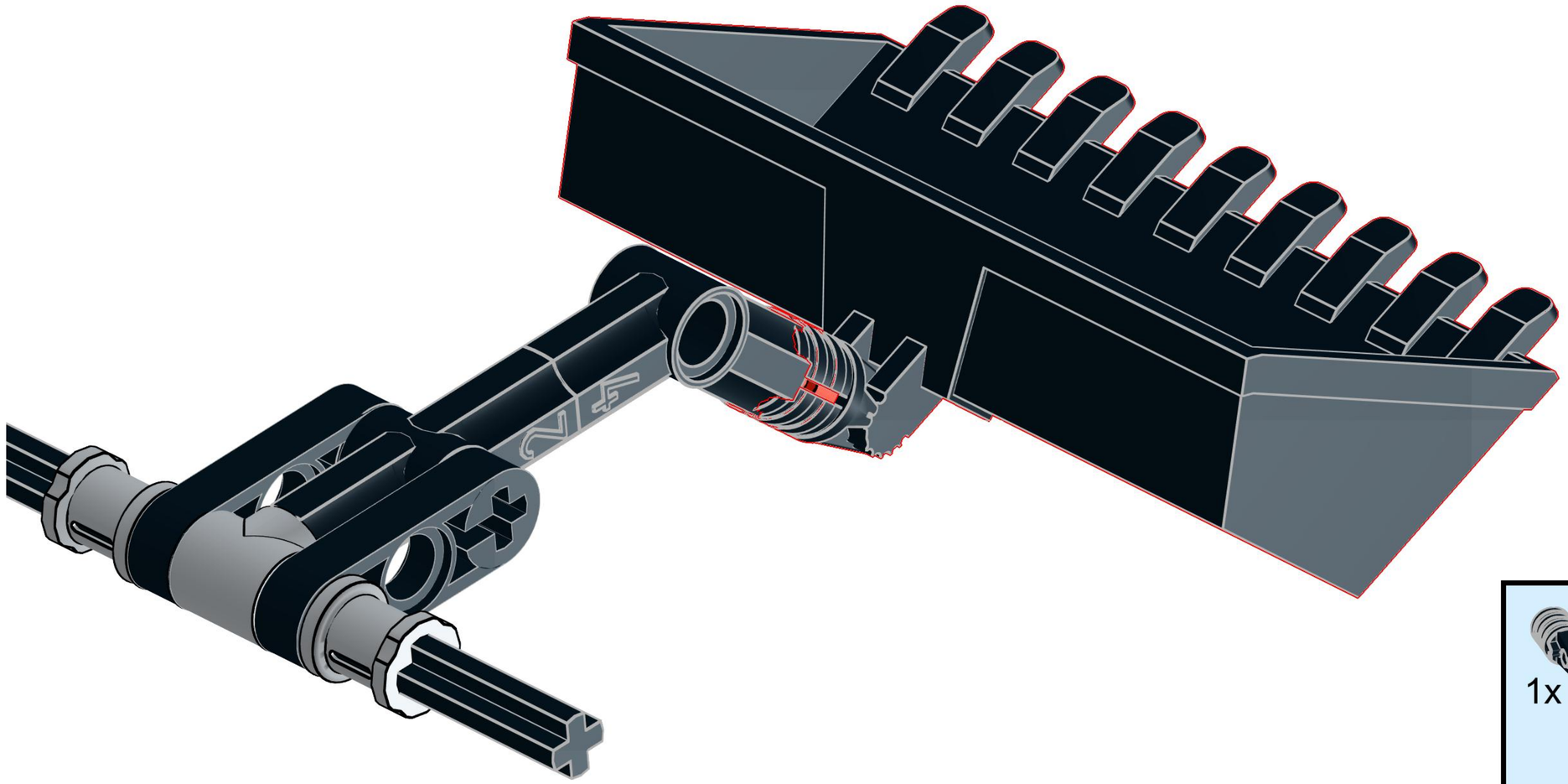

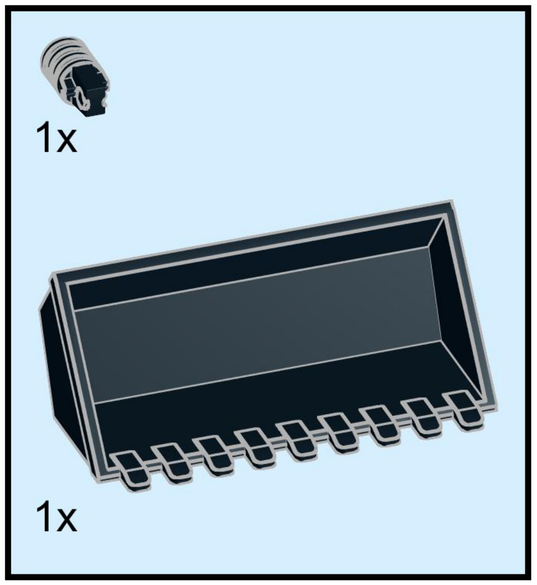

# 143

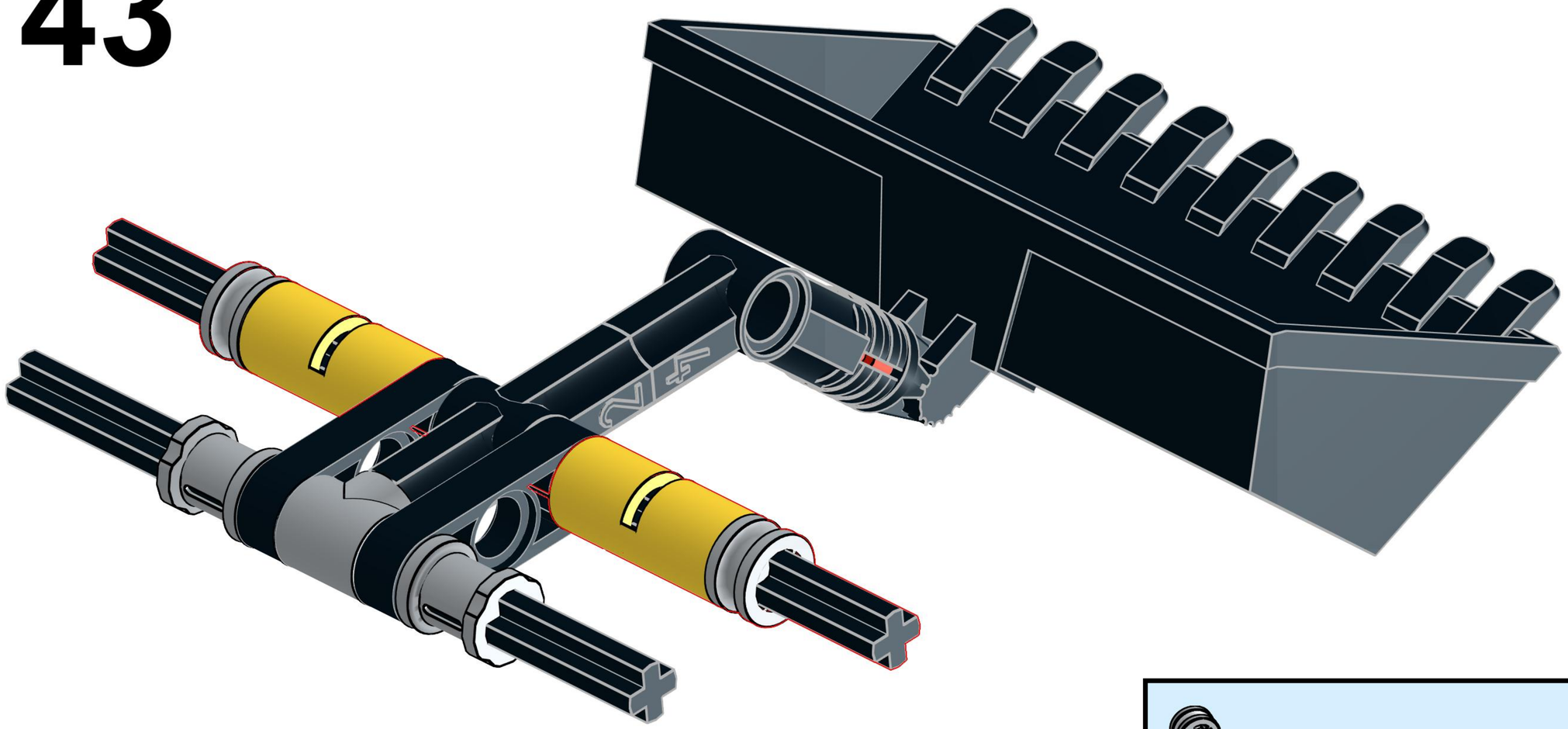

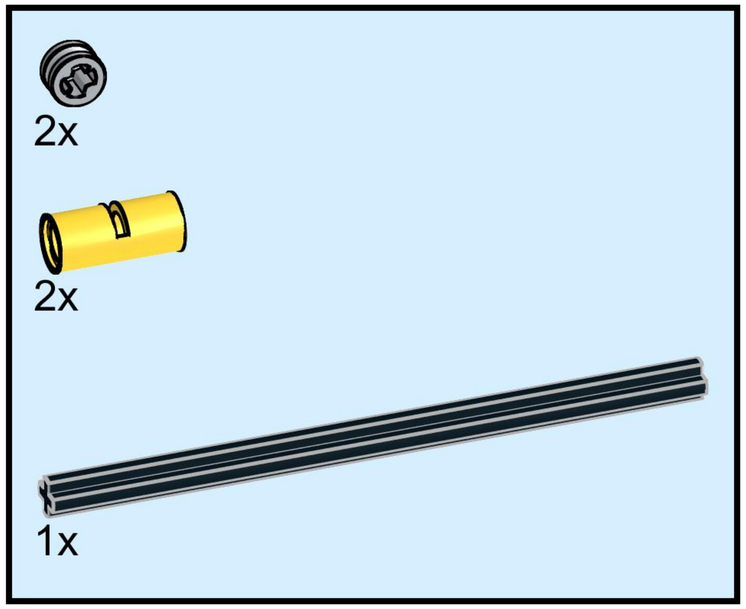

# 144

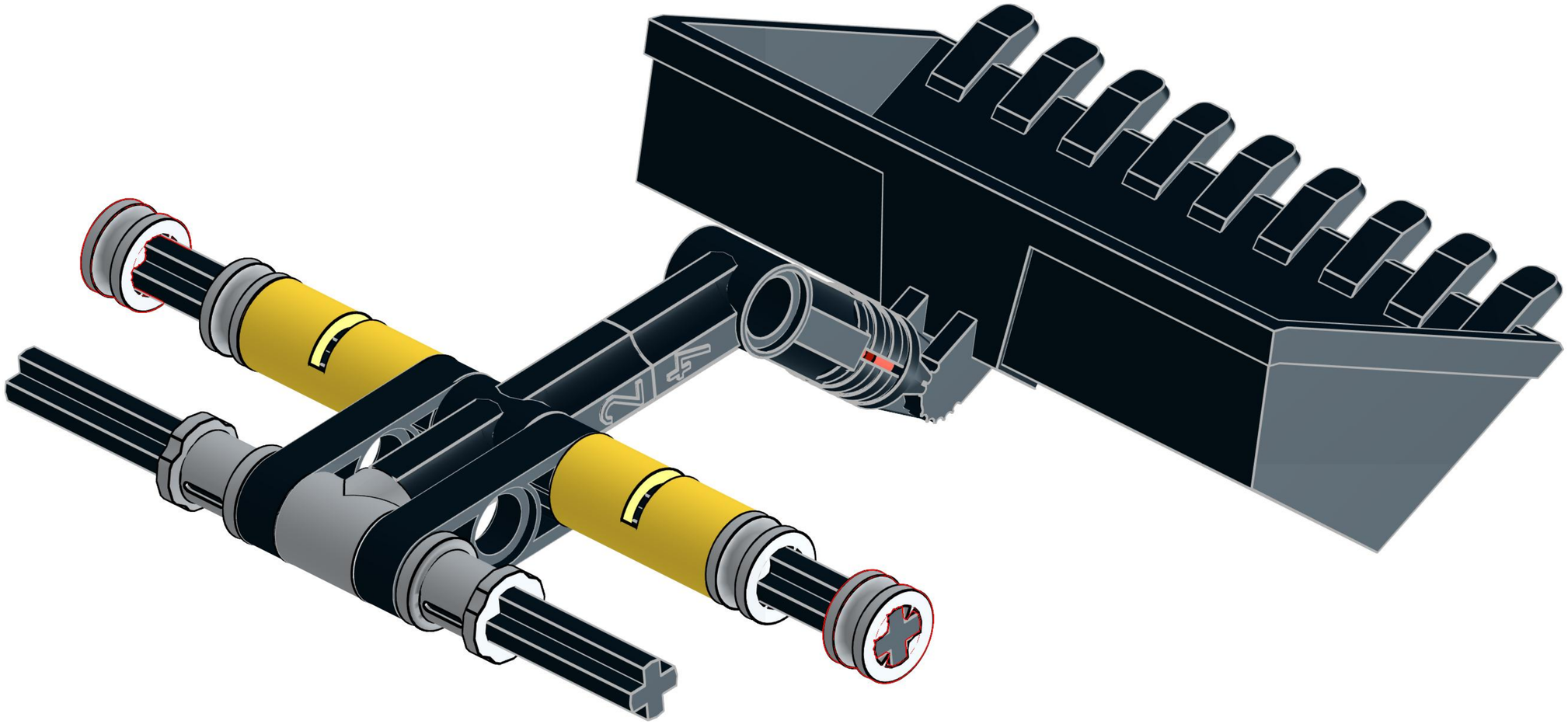

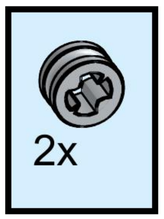

# 145

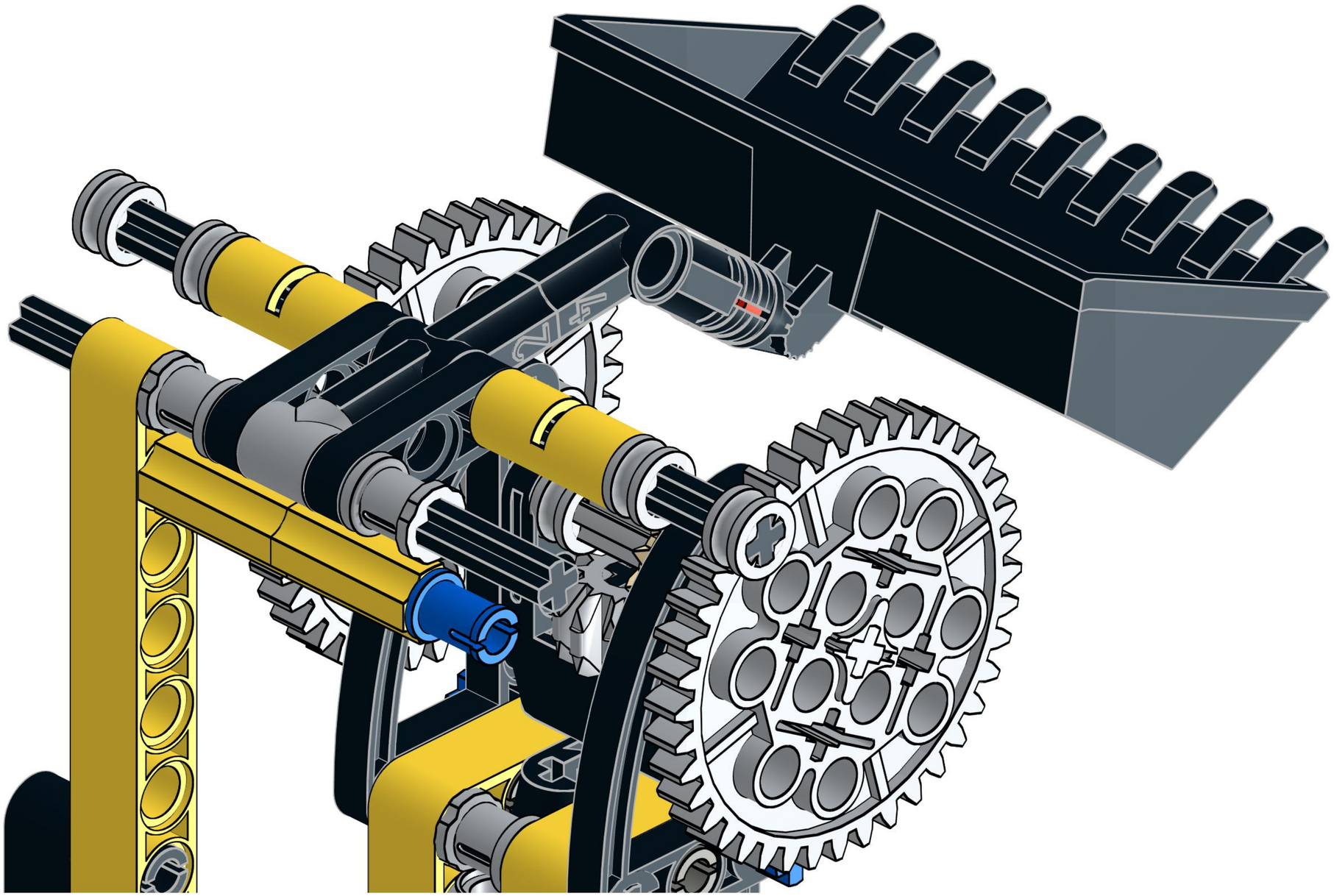

# 146

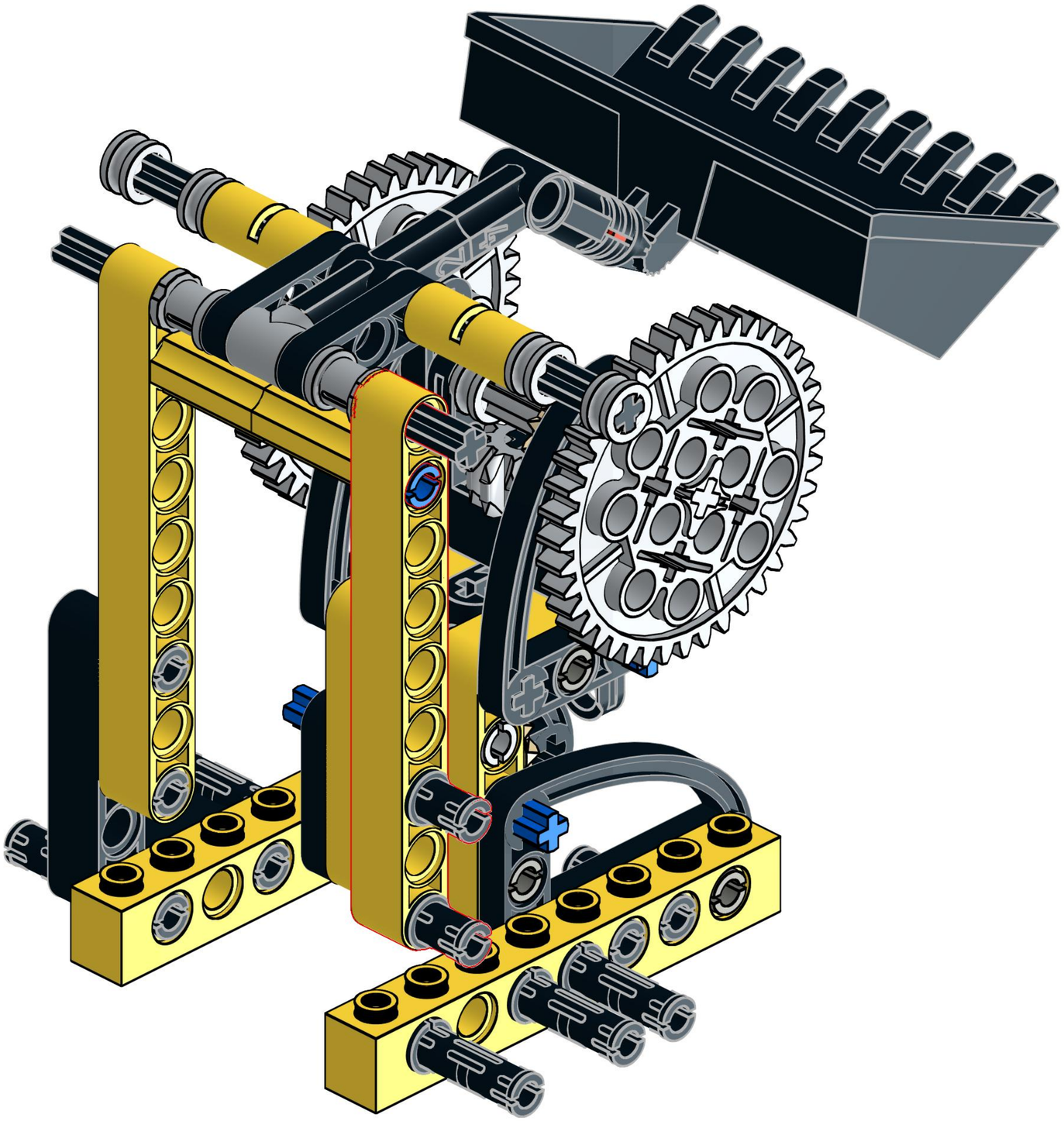

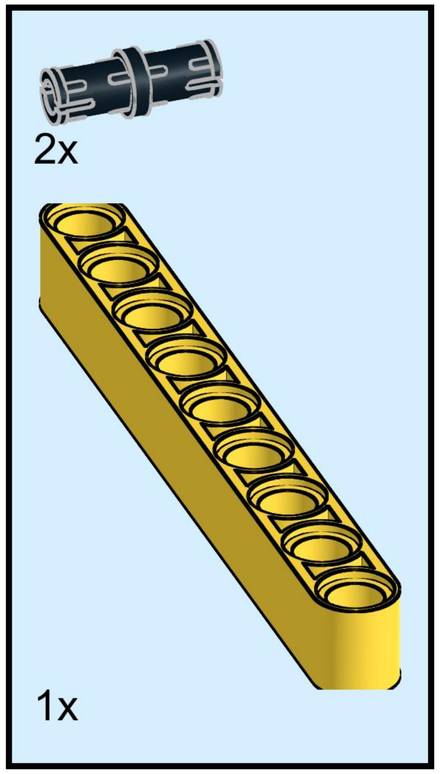

# 147

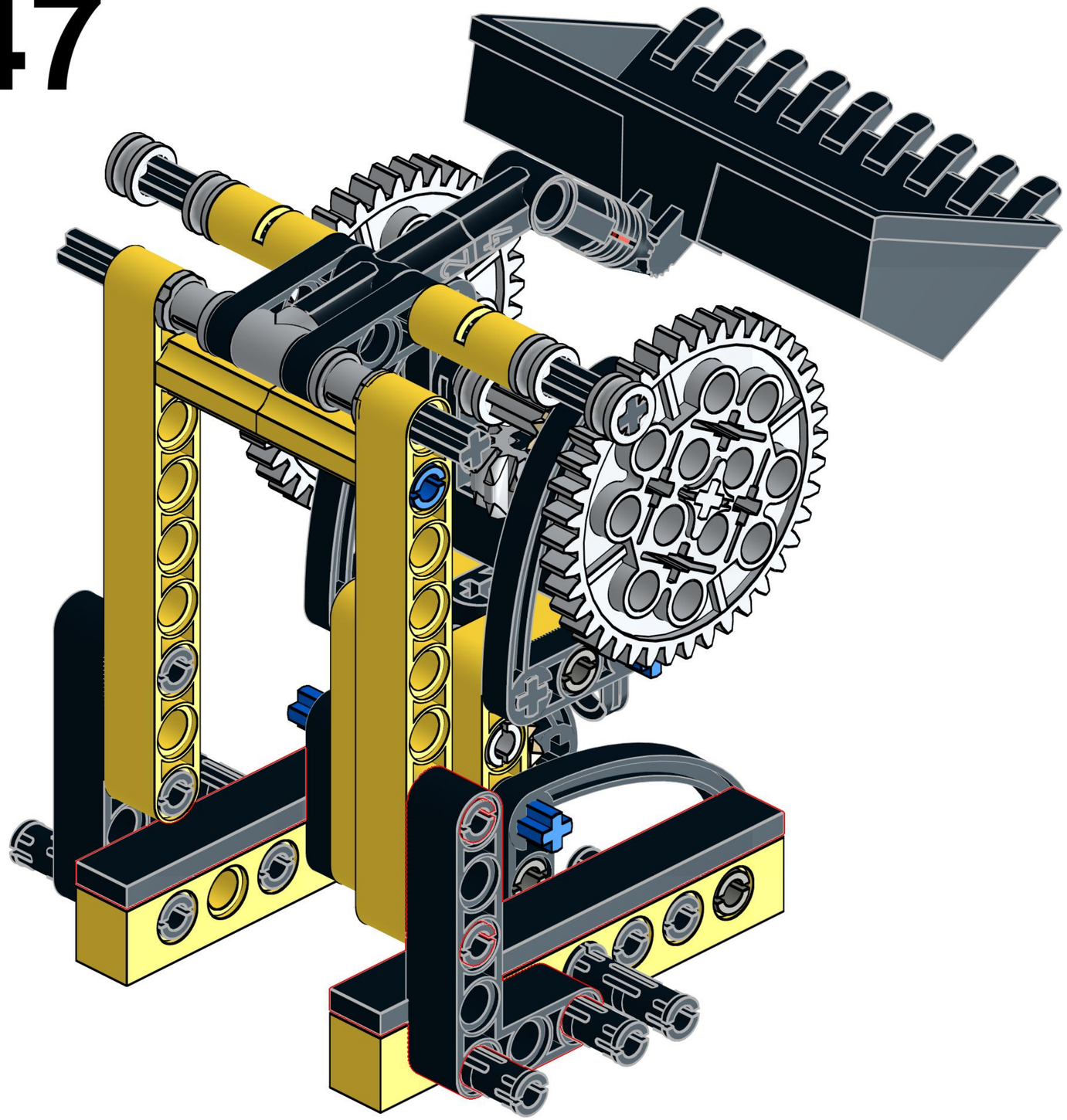

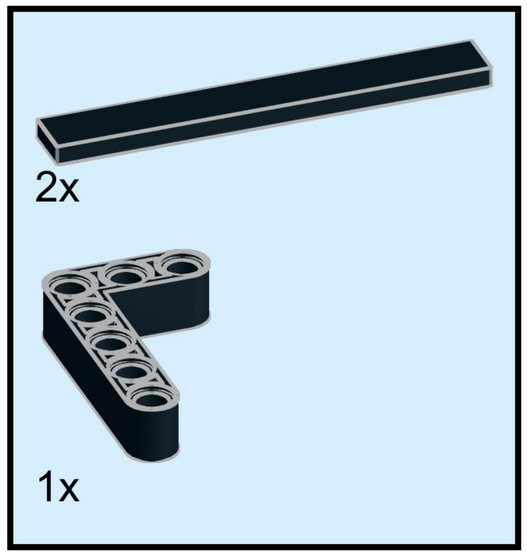

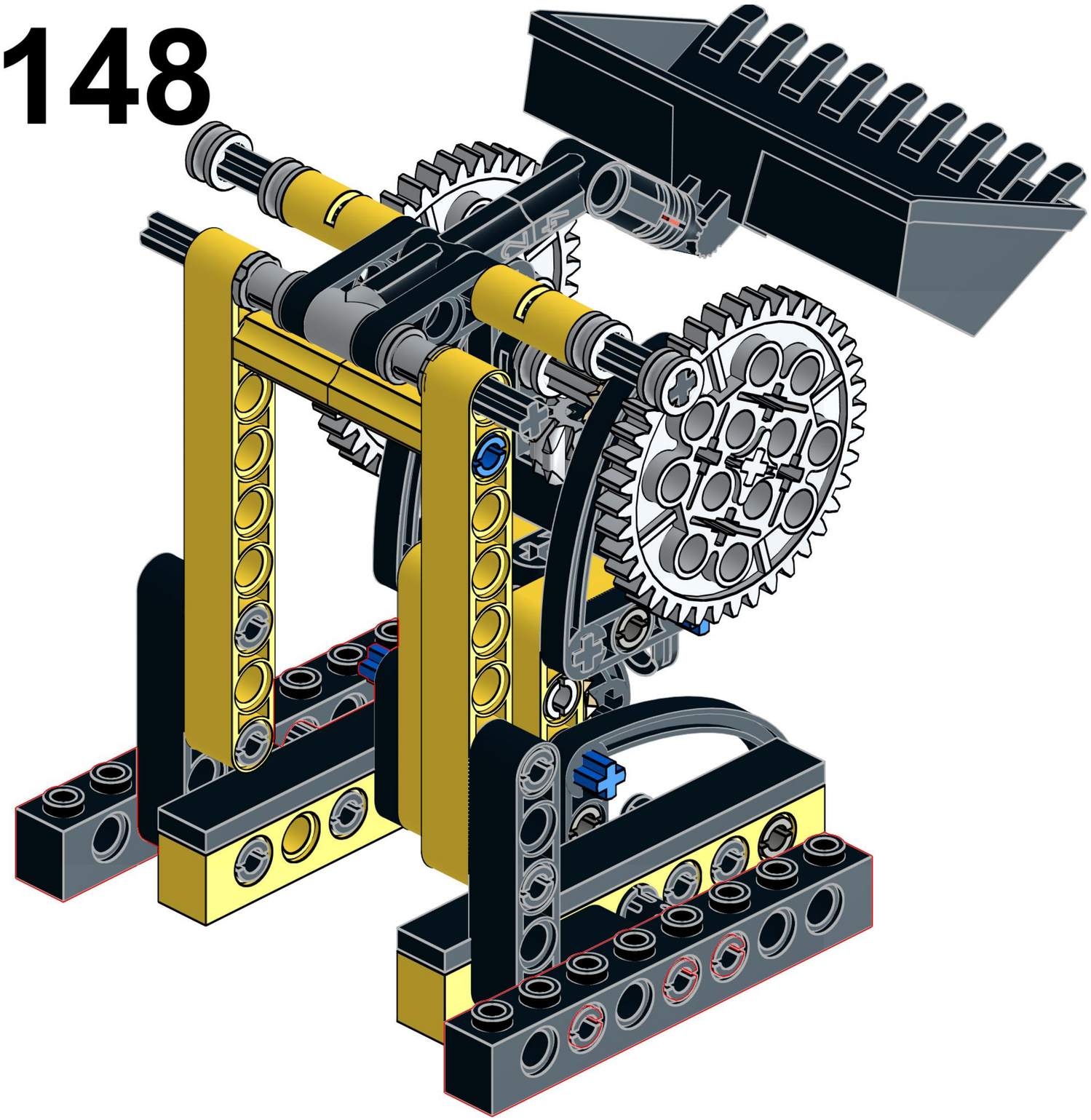

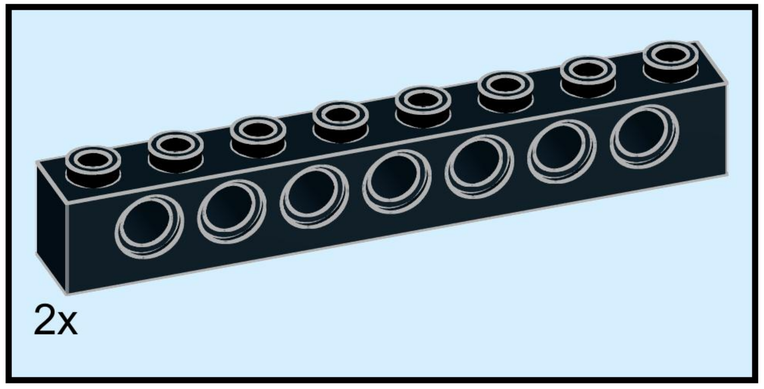
2x

# 149

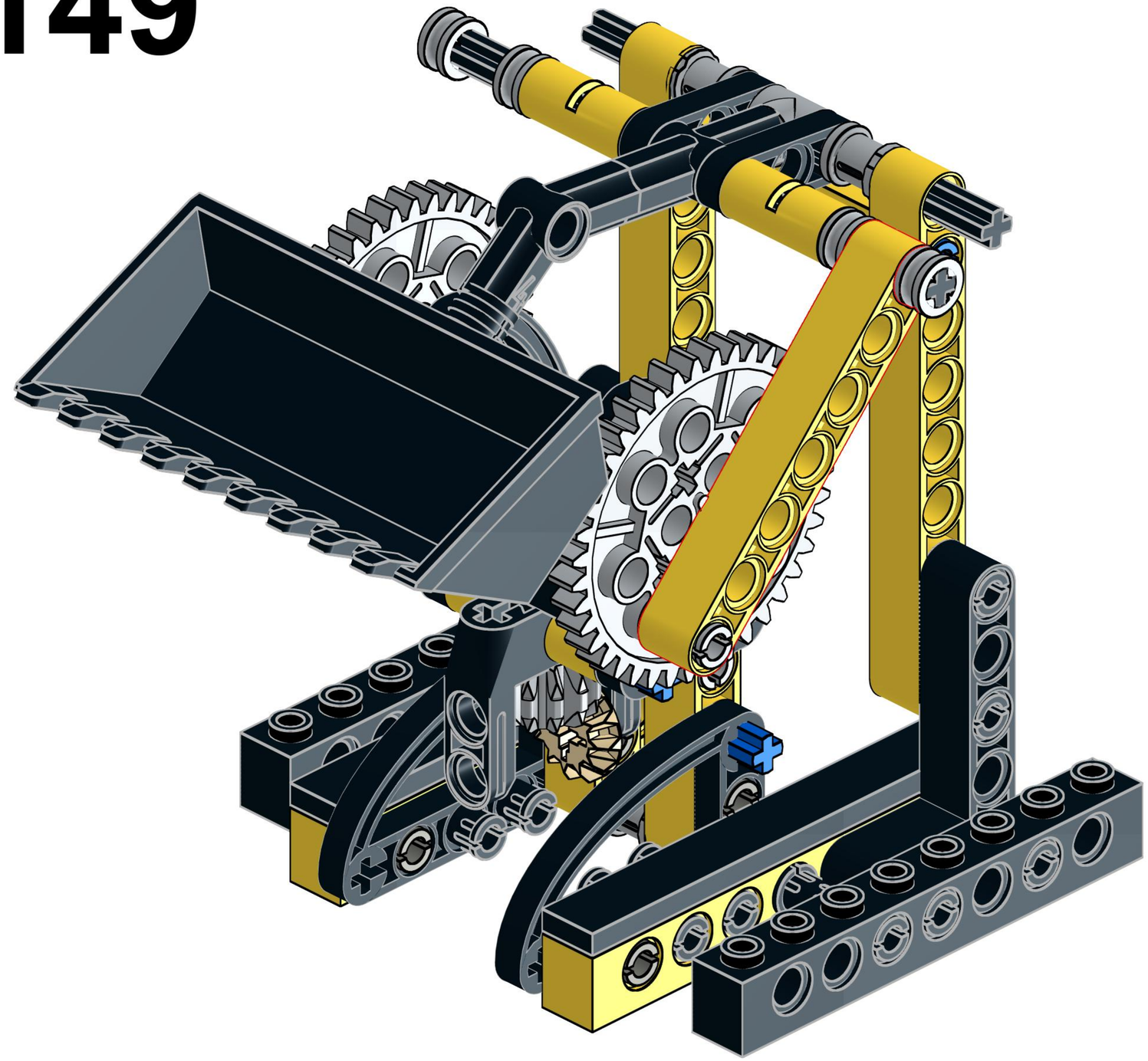

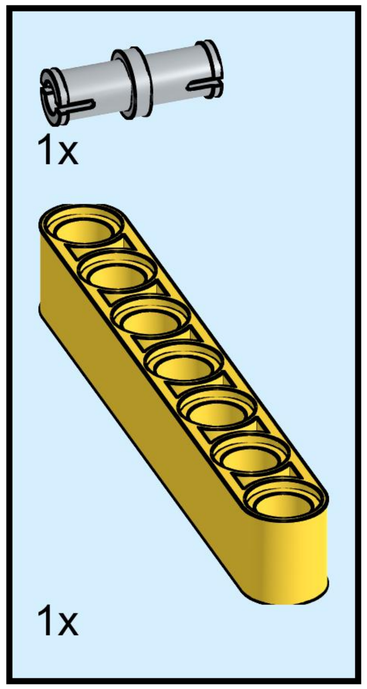

# 150

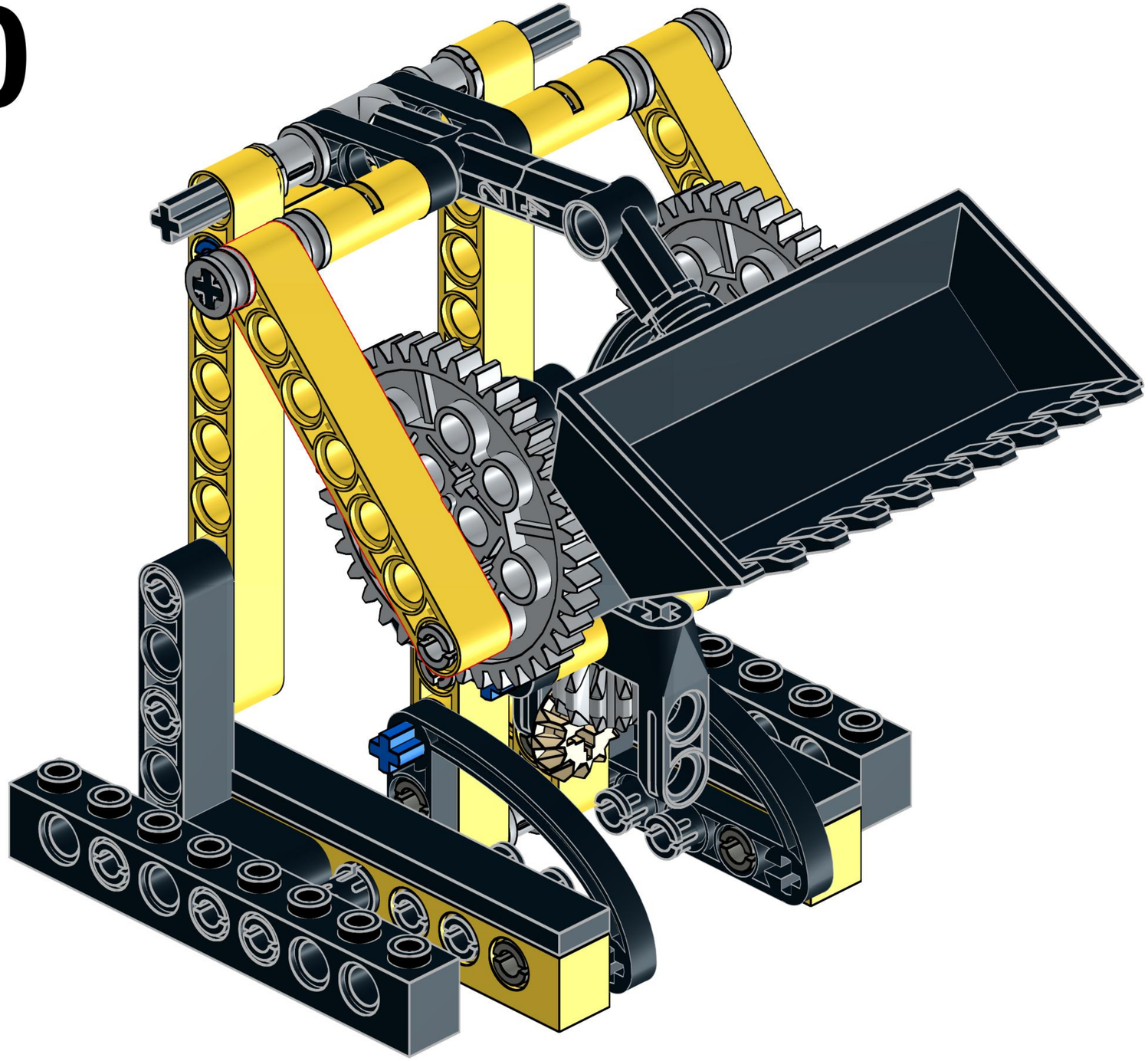

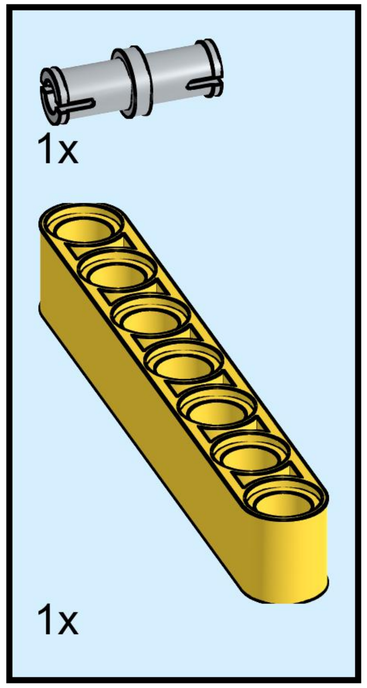

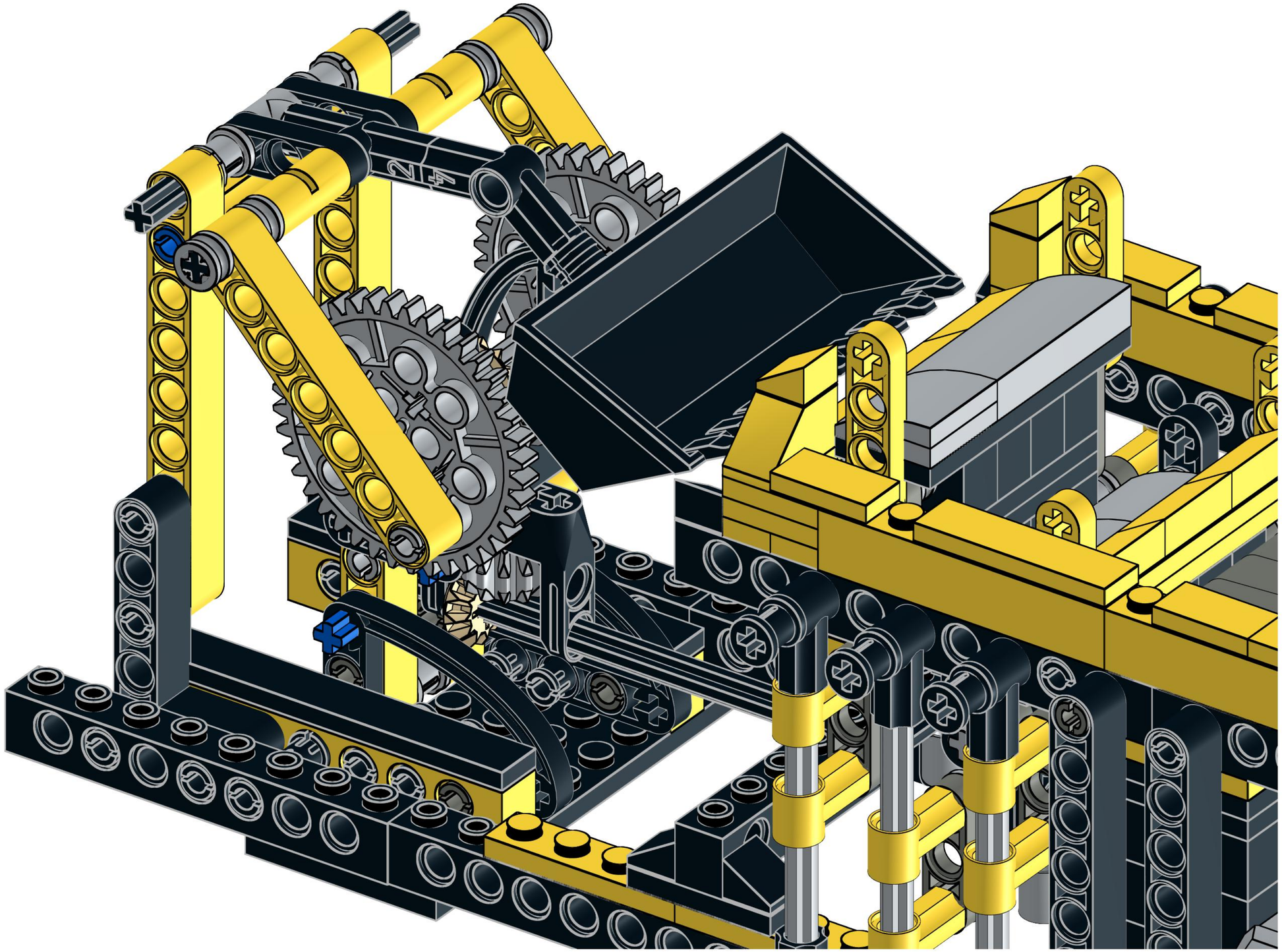

# 152

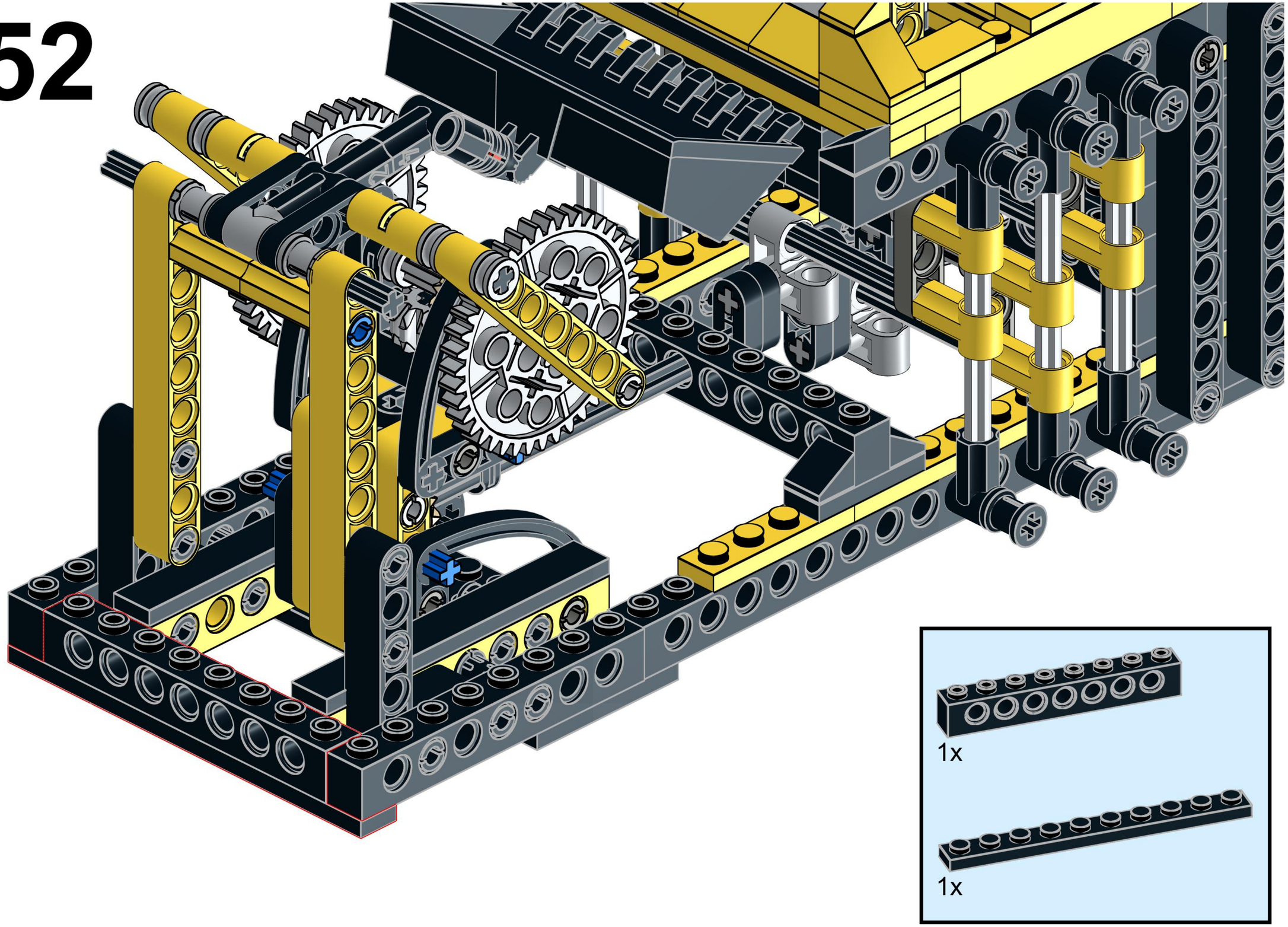

# 153

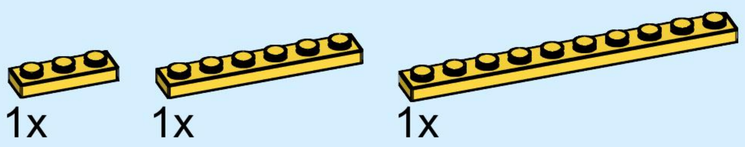

# 154

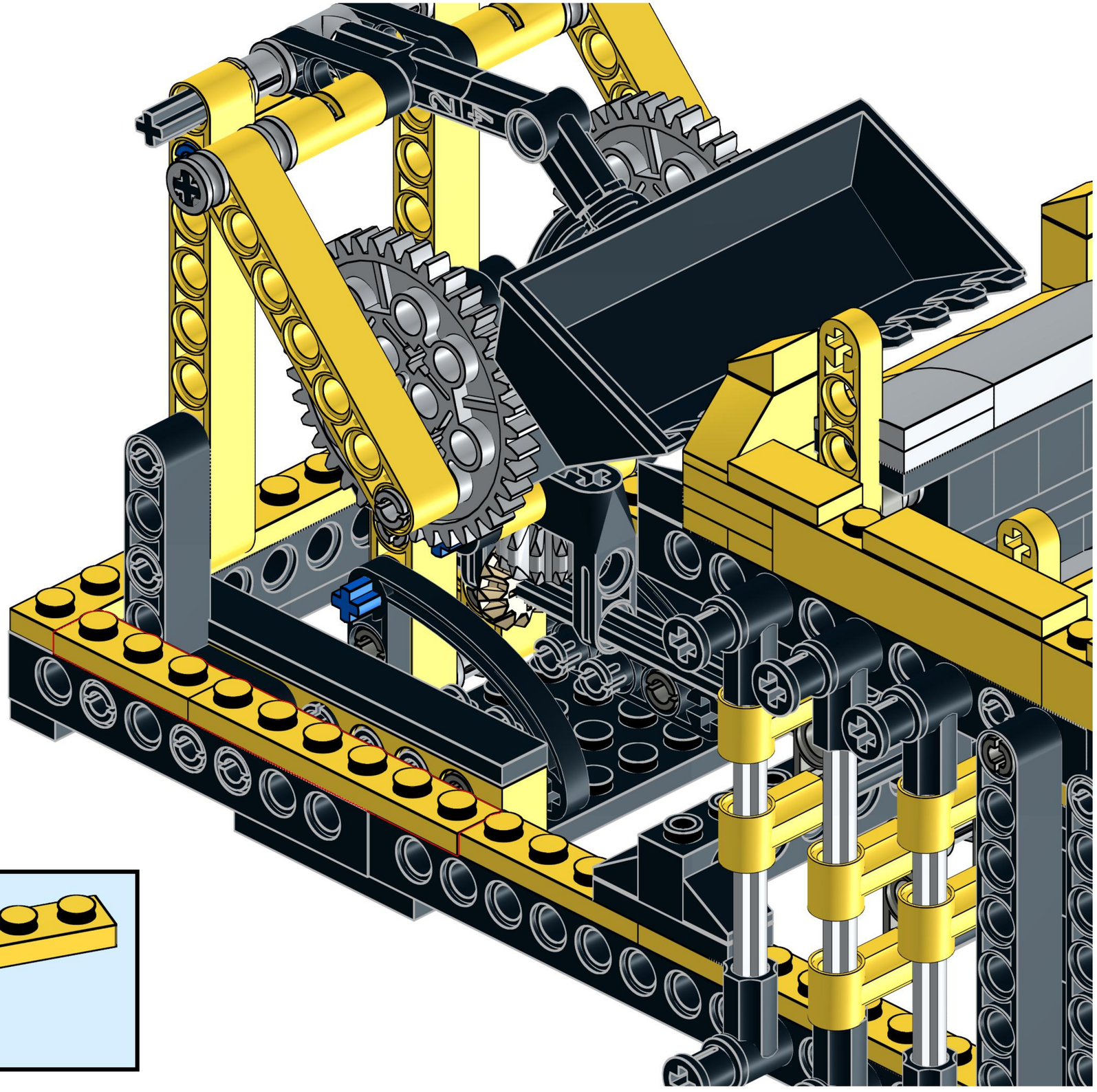

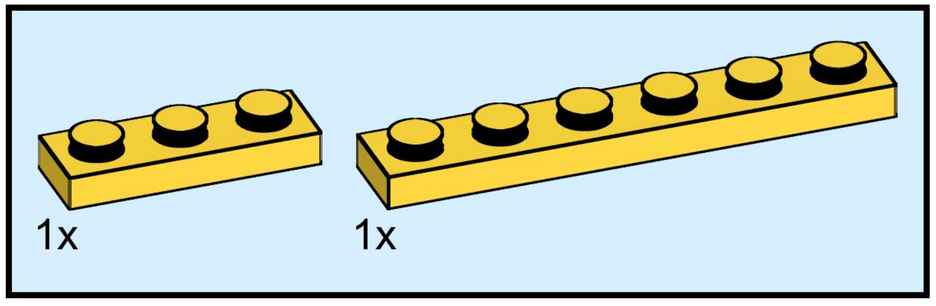

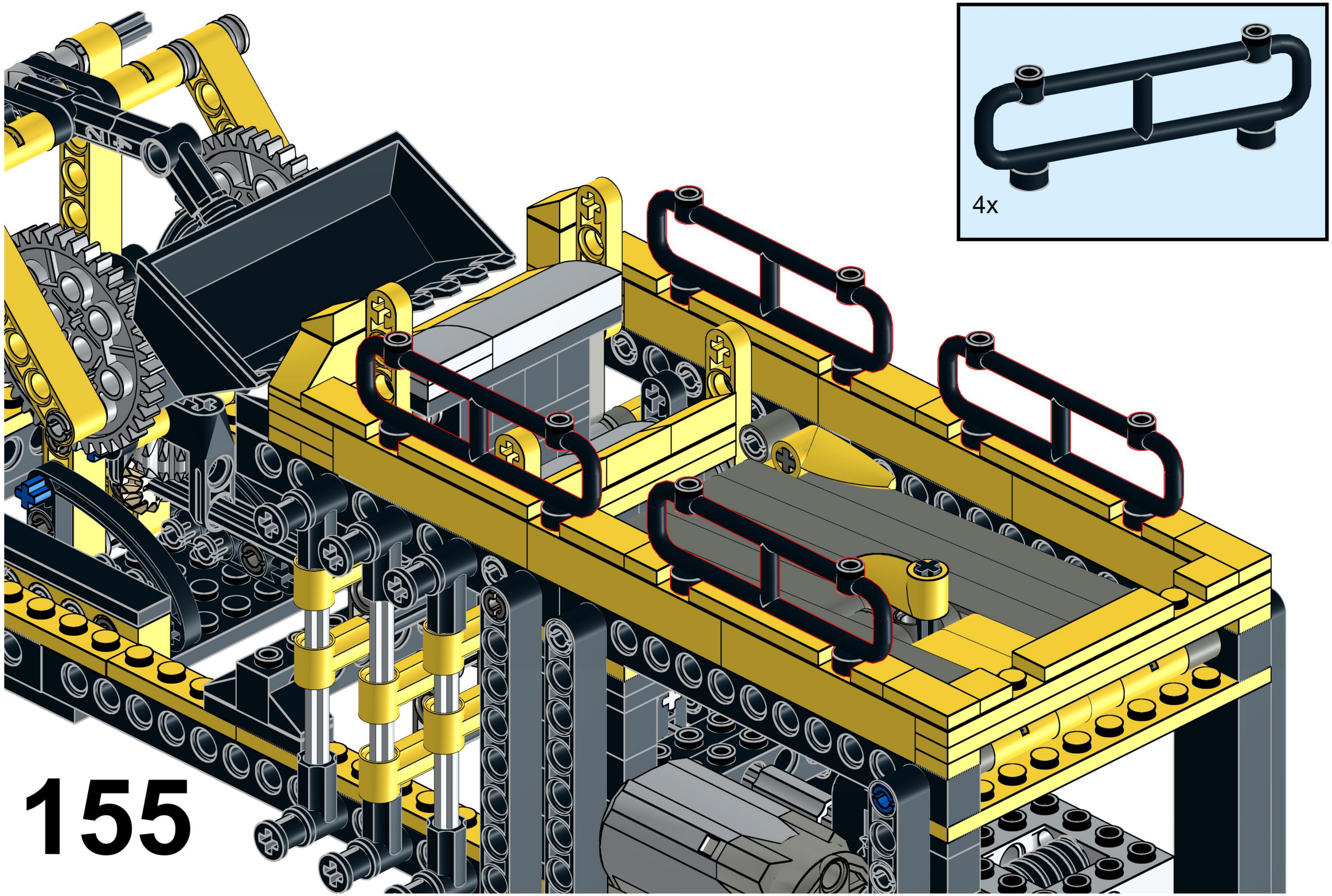


155

1x
3024, 11

27x
4459, 11

12x
32064, 11

1x
32192, 11

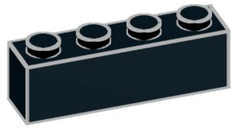
6x
3010, 11

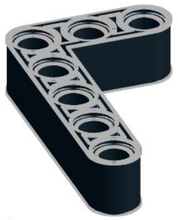
2x
32526, 11

4x
2486, 11

6x
54200, 11

2x
3023, 11

6x
6632, 11

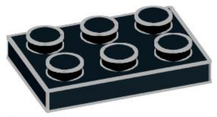
1x
3021, 11

2x
3701, 11

2x
3706, 11

2x
4162, 11

4x
6541, 11

12x
32013, 11

7x
6558, 11

2x
2825, 11

4x
3020, 11

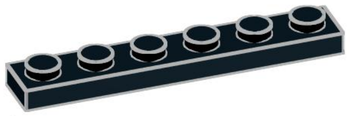
1x
3666, 11

1x
3707, 11

4x
3005, 11

1x
32905, 11

12x
32054, 11

5x
3705, 11

4x
32250, 11

3x
3795, 11

5x
3702, 11

4x
41677, 11

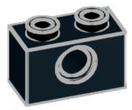
1x
3700, 11

2x
3623, 11

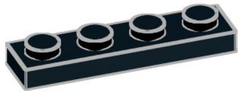
7x
3710, 11

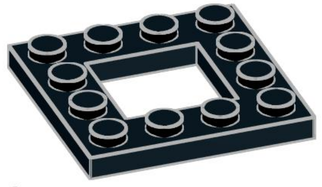
1x
64799, 11

1x
2454, 11

6x
40490, 11

1x
30552, 11

4x
32270, 11

1x
32034, 11

1x
2780, 11

1x
3004, 11

4x
87408, 11

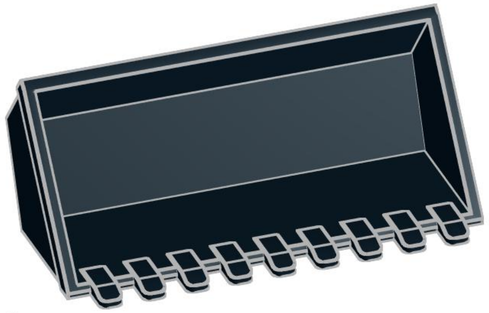

1x
47508, 11

1x
4477, 11

7x
3737, 11

5x
2730, 11

1x
3832, 11

1x
3030, 11

1x
3708, 11

4x
3895, 11

2x
3703, 11

2x
18654, 85

7x
32002, 85

8x
41677, 85

1x
6536, 85

8x
6632, 85

2x
11214, 85

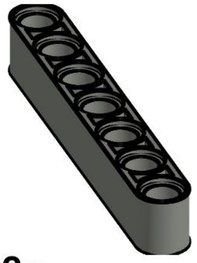
2x
32524, 85

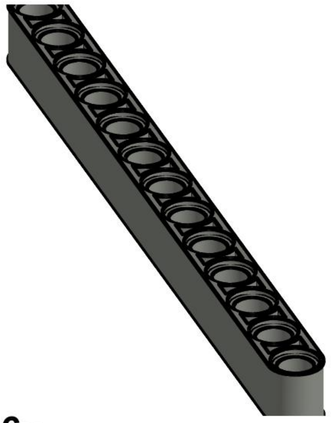
6x
41239, 85

11x
4265c, 86

10x
3713, 86

2x
3673, 86

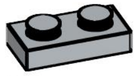
2x
3023, 86

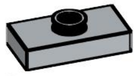
2x
3794, 86

1x
6538c, 86

1x
22961, 86

2x
32270, 86

2x
3022, 86

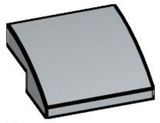
2x
15068, 86

3x
44809, 86

3x
4519, 86

1x
62520c01, 86

1x
87082, 86

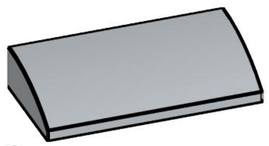
2x
88930, 86

2x
32073, 86

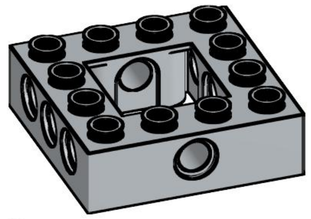
2x
32324, 86

10x
44294, 86

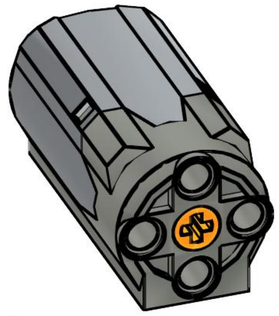
1x
58120c01, 86

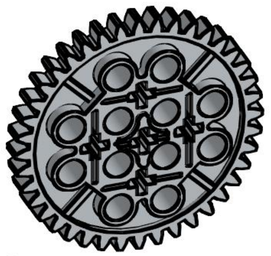
2x
3649, 86

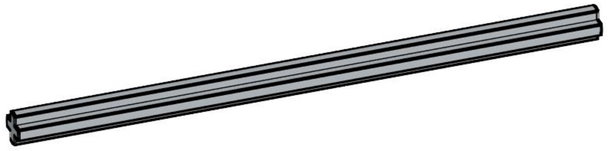
1x
23948, 86

6x
32062, 5

4x
6589, 2

1x
4265c, 3

6x
3070b, 3

4x
3024, 3

2x
54200, 3

6x
3069b, 3

2x
3023, 3

4x
62462, 3

12x
32013, 3

2x
6538c, 3

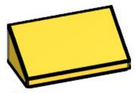
6x
85984, 3

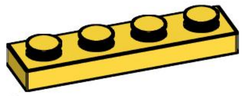
6x
3710, 3

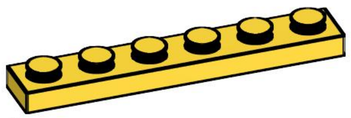
4x
3666, 3

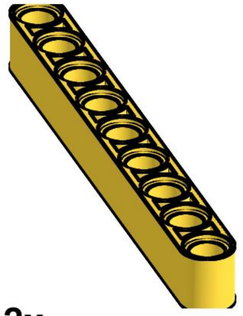
2x
40490, 3

2x
3040, 3

5x
2431, 3

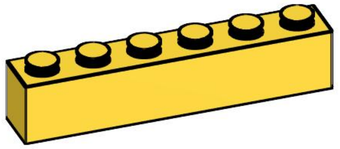
6x
3009, 3

4x
2420, 3

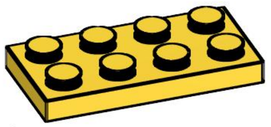
1x
3020, 3

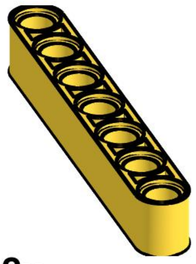
2x
32524, 3

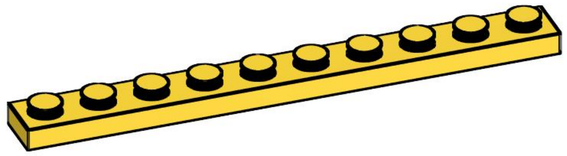
4x
4477, 3

3x
x346, 3

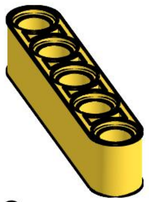
2x
32316, 3

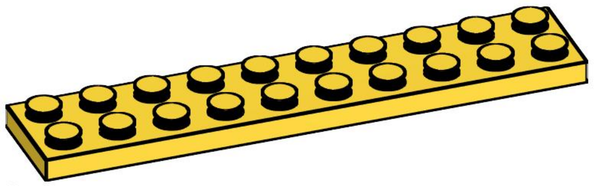
2x
3832, 3

2x
3623, 3

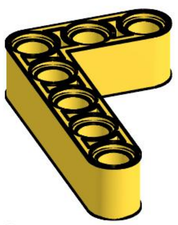
2x
32526, 3

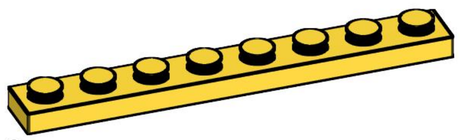
3x
3460, 3

2x
43093, 7

4x
32449, 3

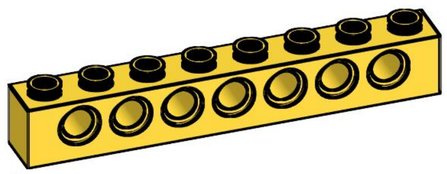
2x
3702, 3

6x
3749, 7

13x
6558, 7

Module Revision Notes

Version 1.0 - Initial Release

Version 1.1 - Replaced poorly chosen 1x6 Yellow Bricks without bottom tubes (no longer available) with regular 1x6 Yellow Bricks (accidental part selection during build)