COMPACT RESERVOIR - DUCK EDITION

Mod by
Ryk Field

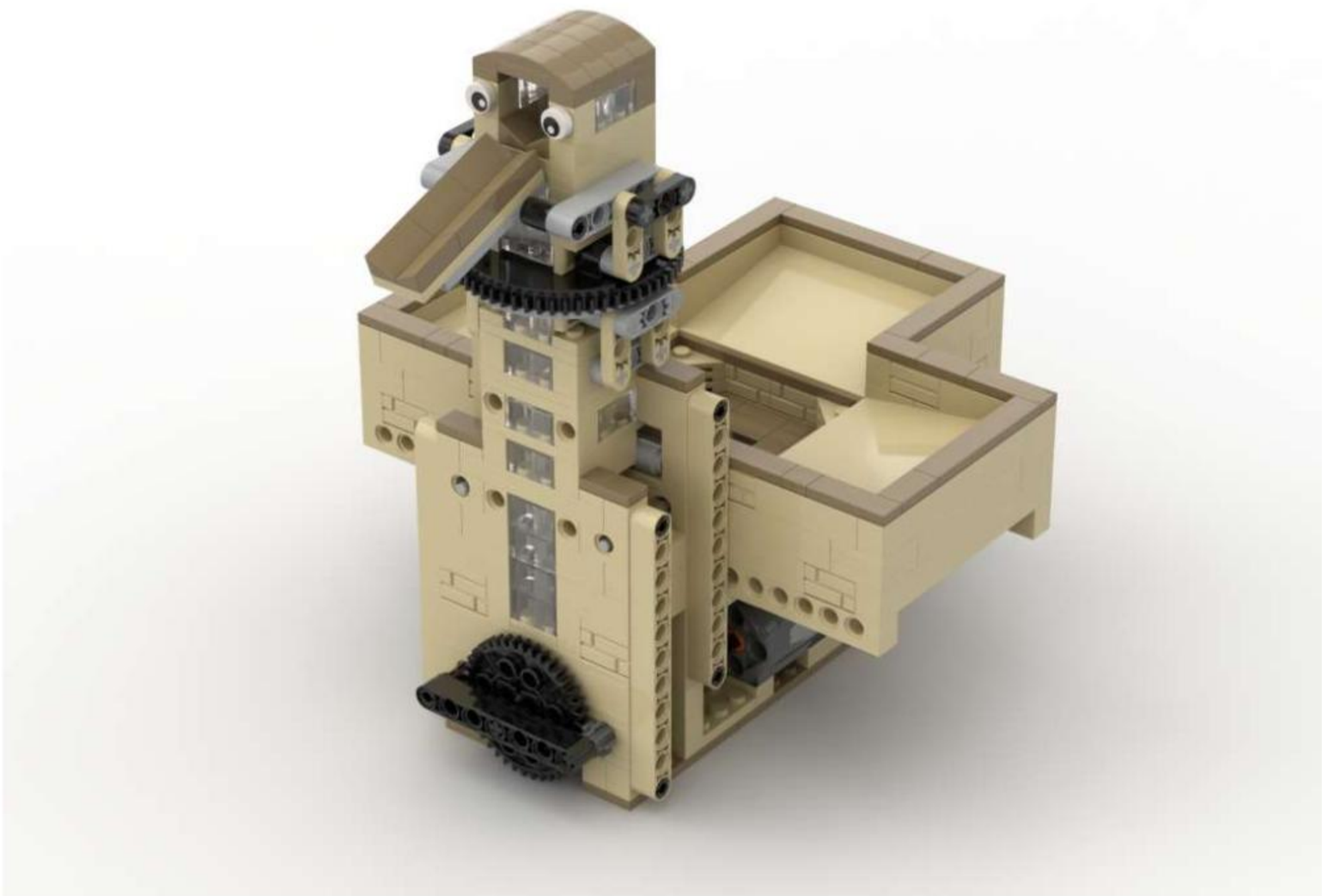

Version 1.0

Copyright 2019
Attribution-NonCommercial 4.0 International (CC BY-NC 4.0)
https://creativecommons.org/licenses/by-nc/4.0/

MOD01-Duck

This Compact Reservoir is a modified version of the BW 2018 Ball Pump by Brian Alano.

I wanted to build a small reservoir module with large overhangs to use at corners of my GBC setup, and chose to modify this well-built, reliable ball pump for the purpose.

The pumping mechanics of this reservoir are unchanged from the original design. Some structural and aesthetic changes have been made to support the geometry of this reservoir.

This "Duck Edition" includes a turntable mod by Matt from GreatBallPit.com

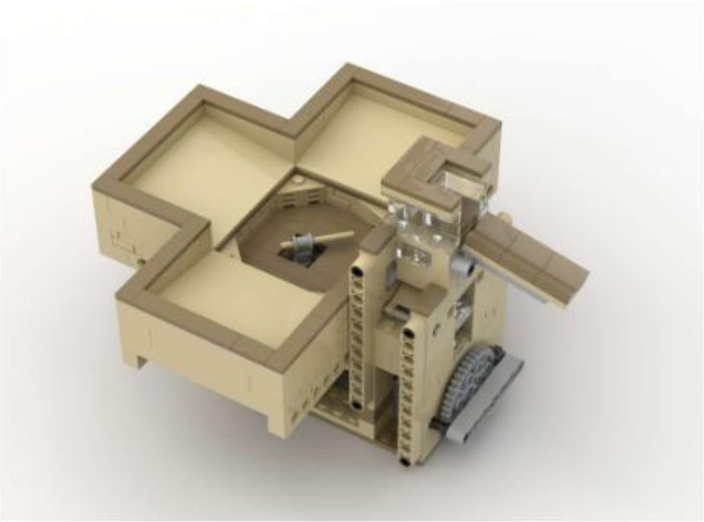

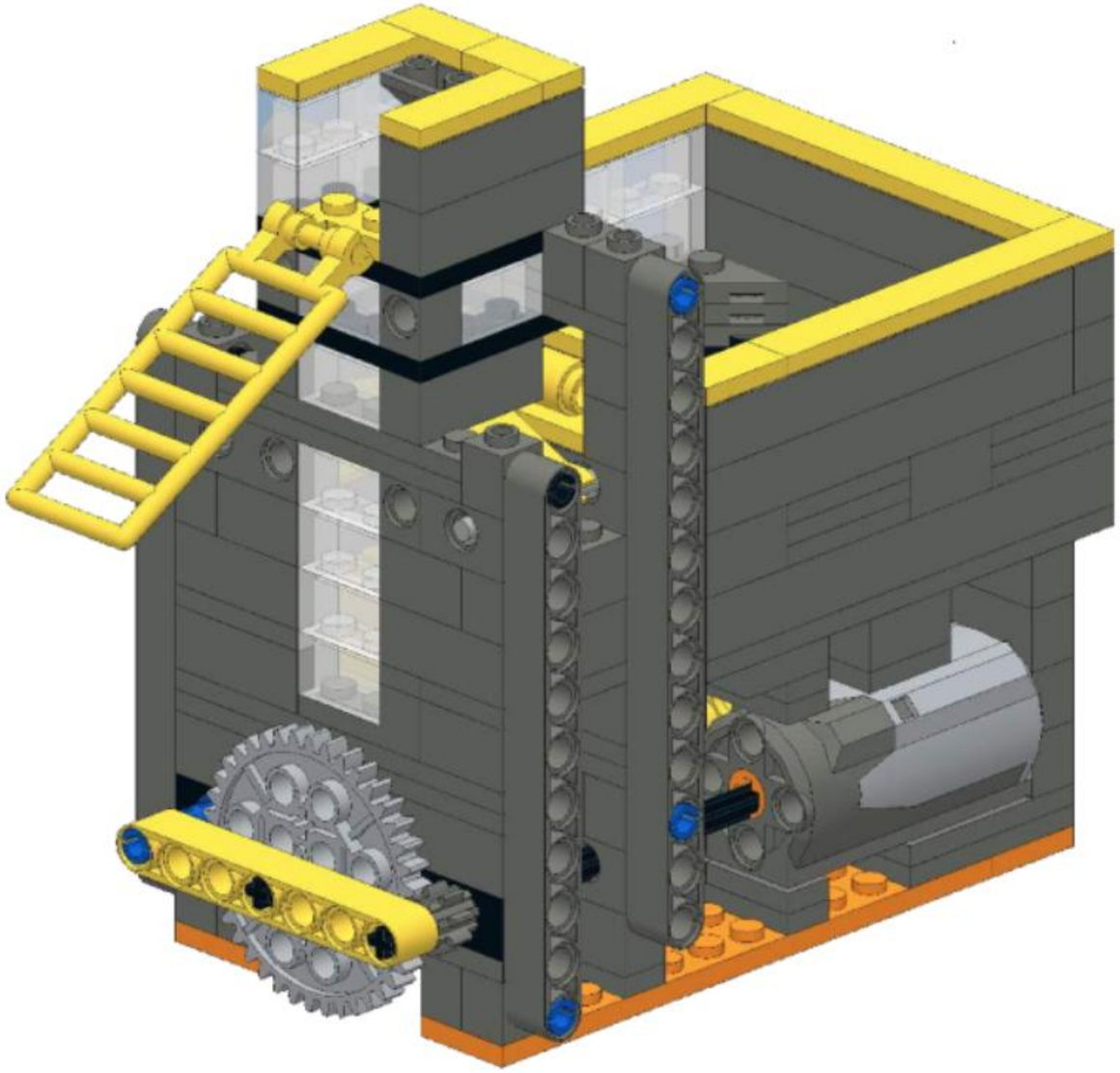

2018 Brickworld Ball Pump with Check Valve
Design by Brian Alano
Contributions from
Tom Atkinson, Bryan Bonahoom
and Bob Luzenski

https://brickworld.com/2018-gbc-workshop-kit/

1

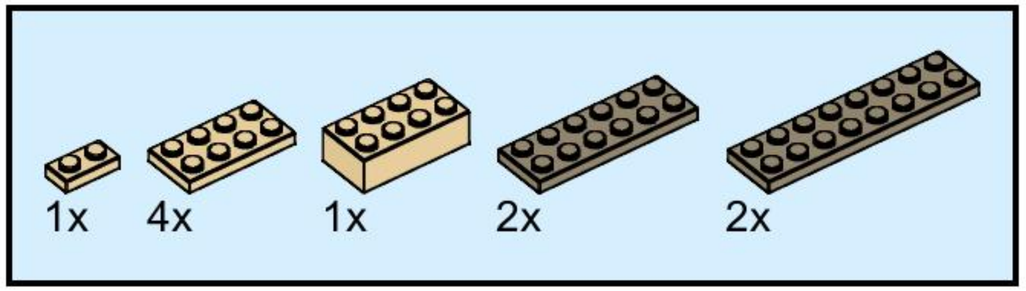

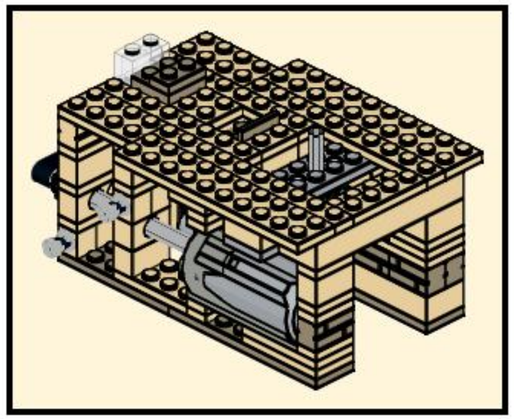

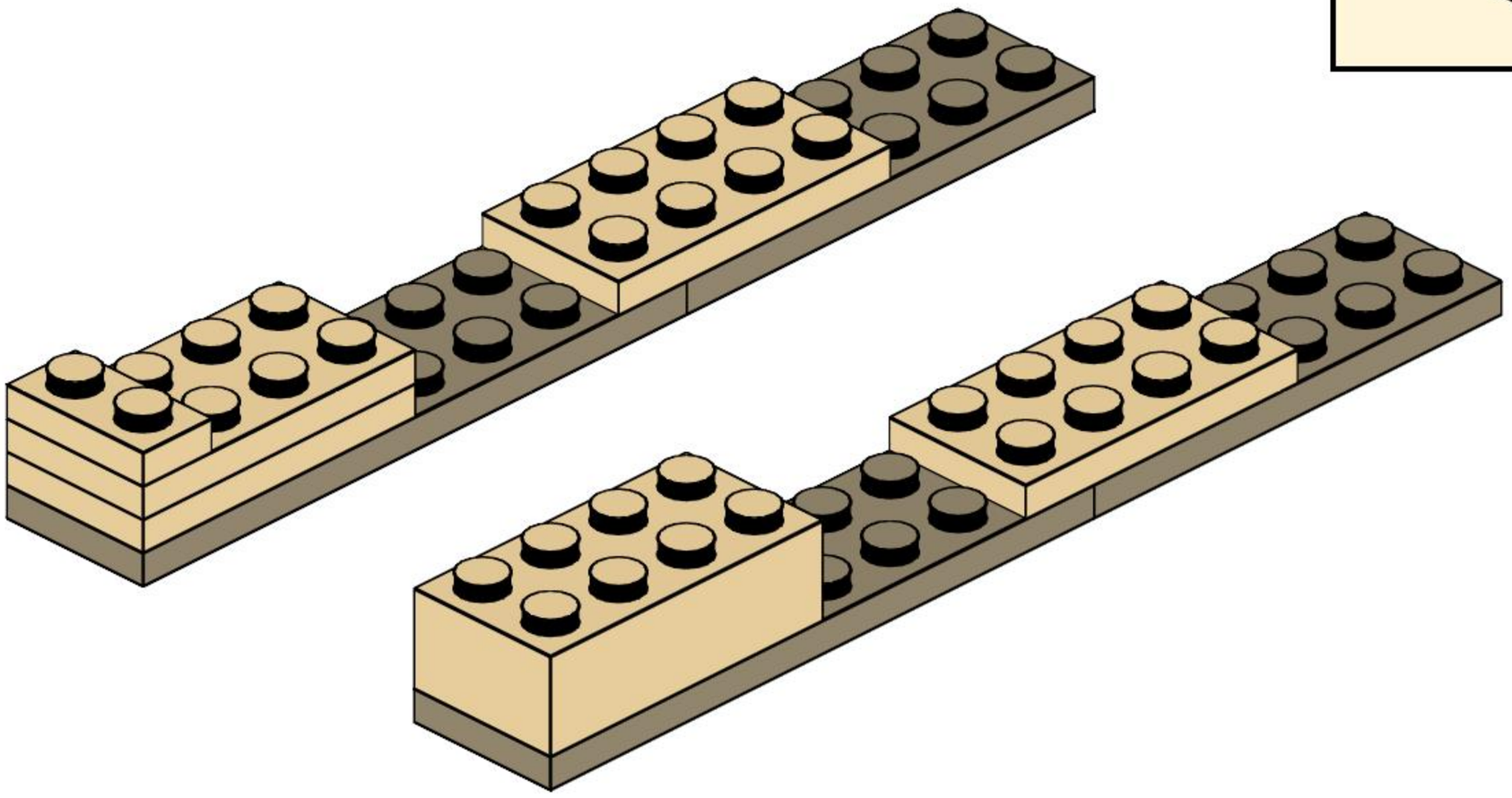

2

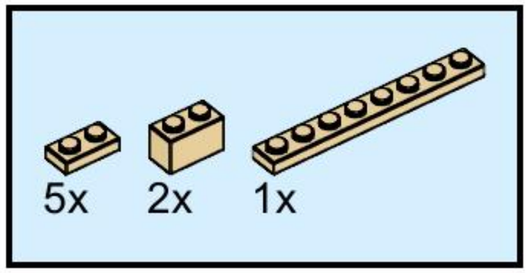

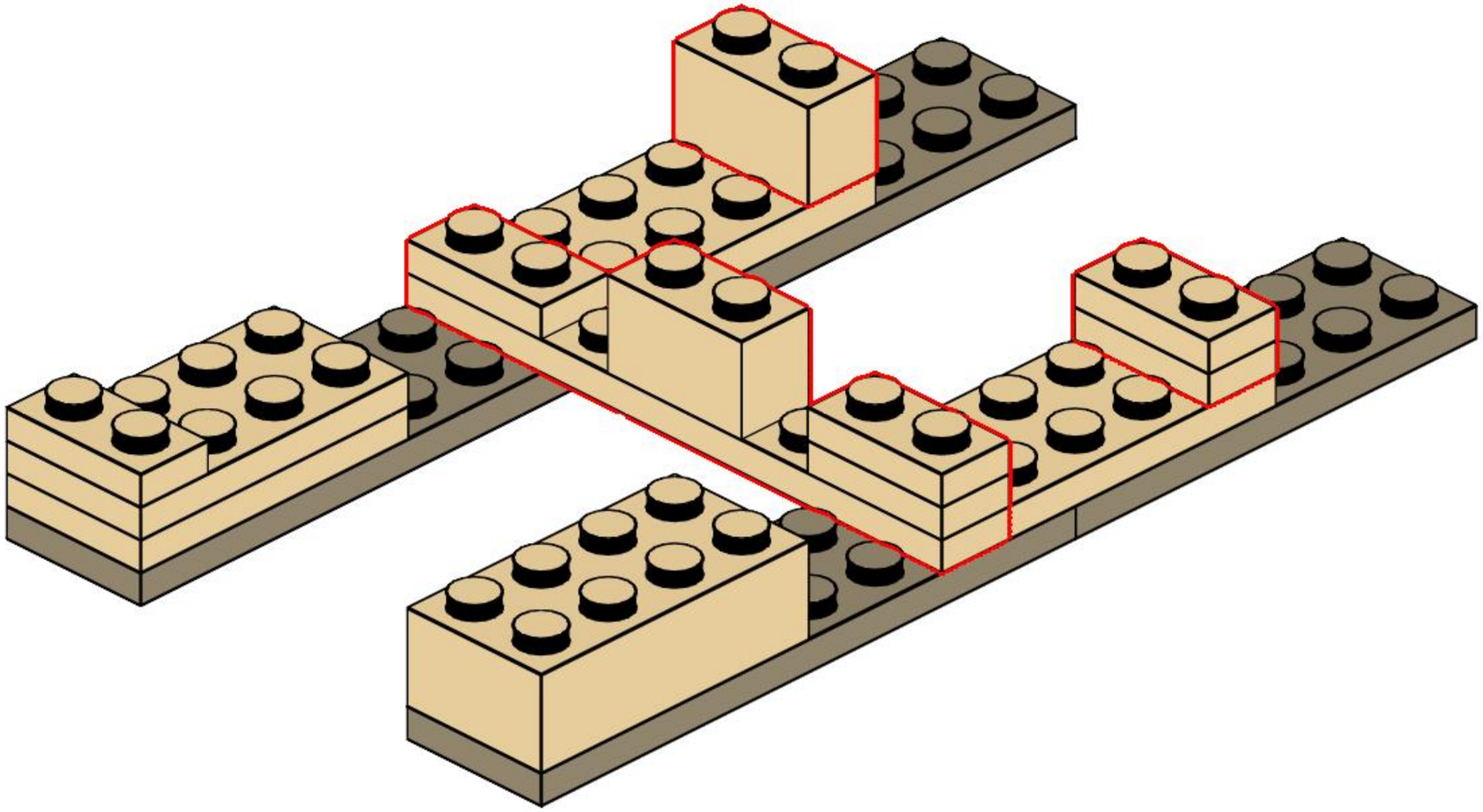

3

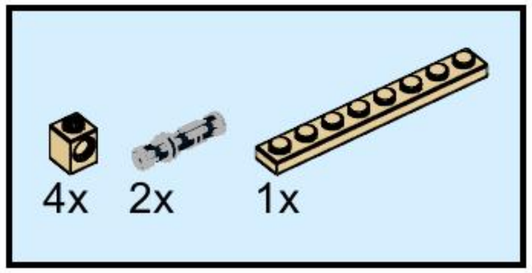

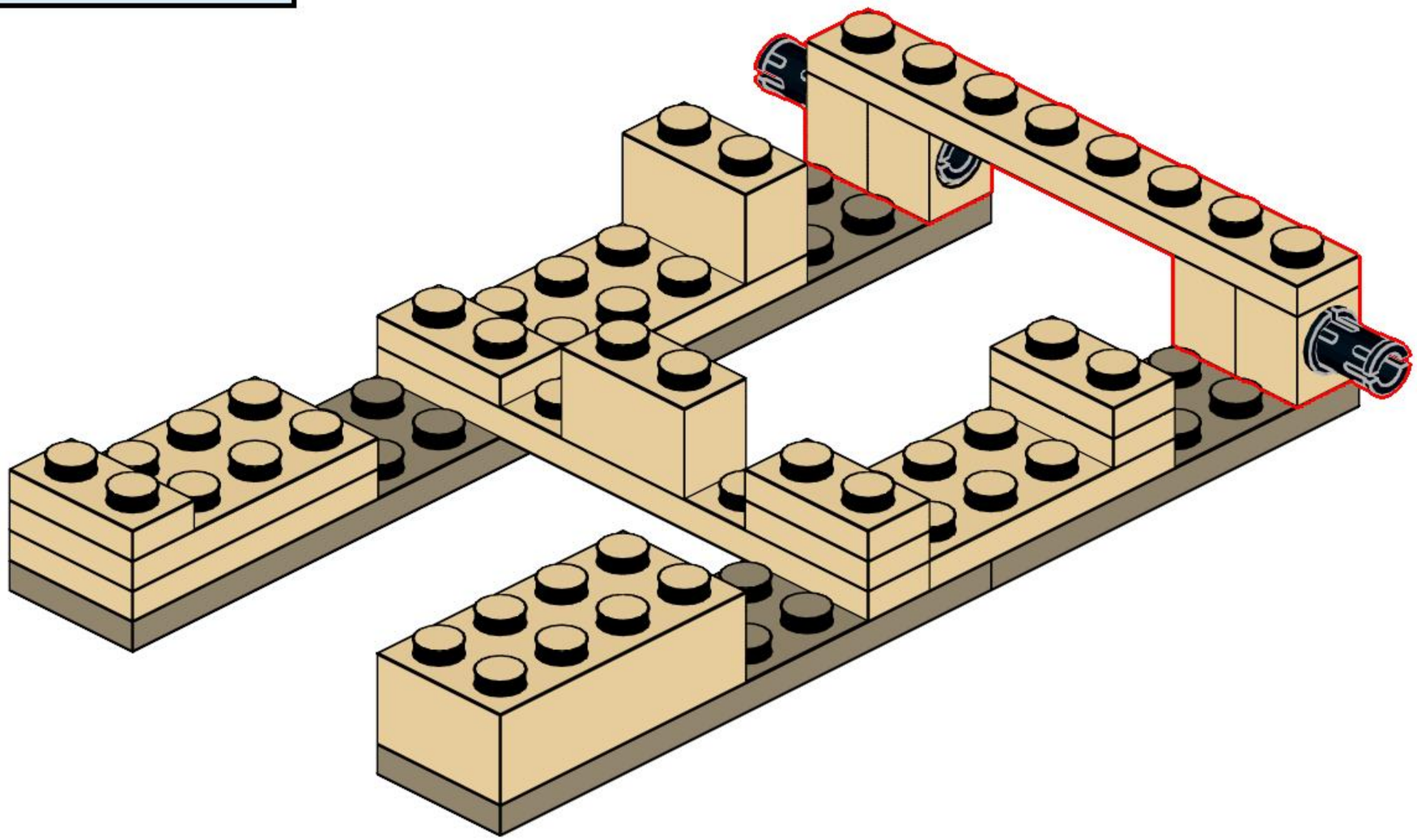

4

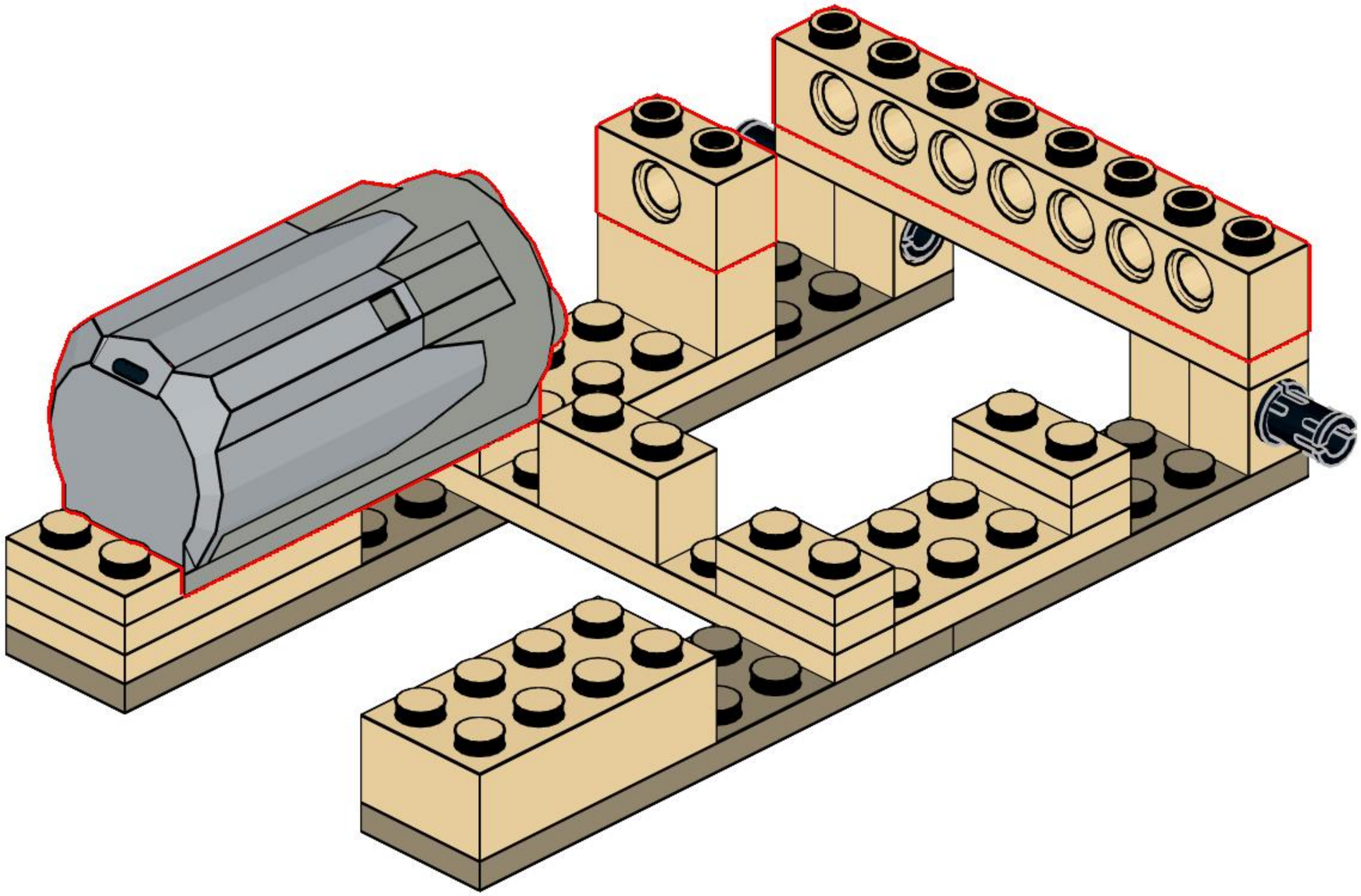

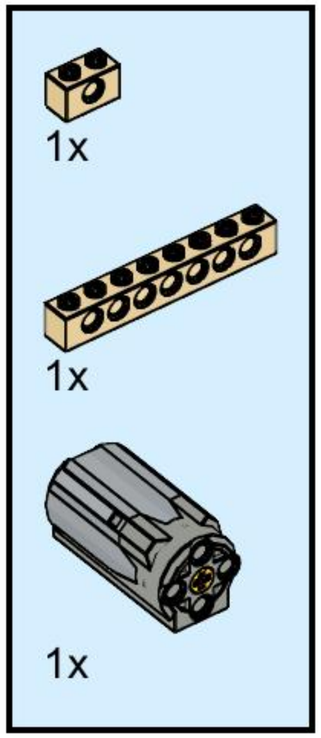

5

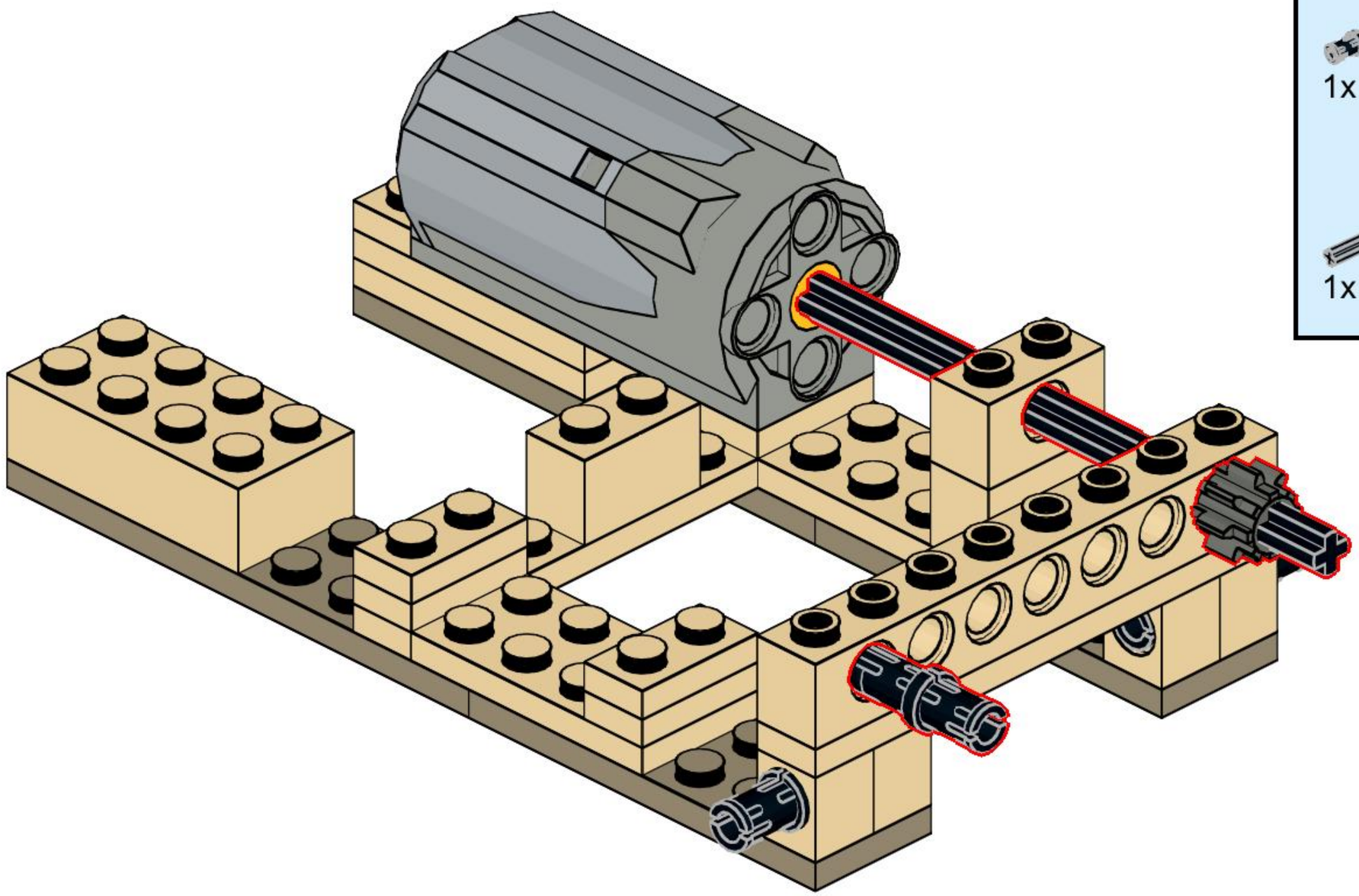

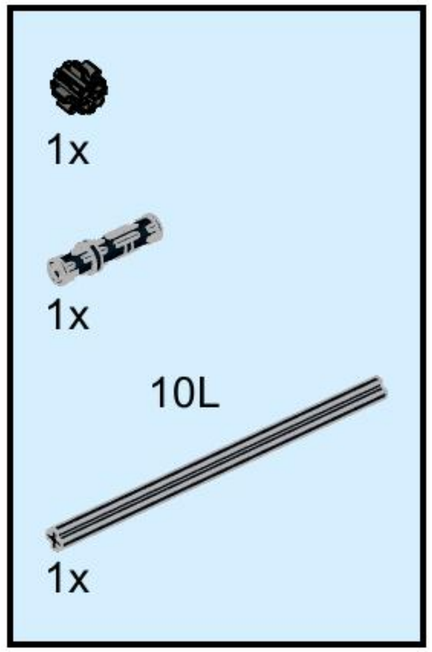

6

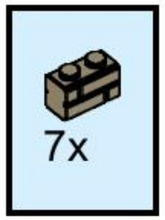

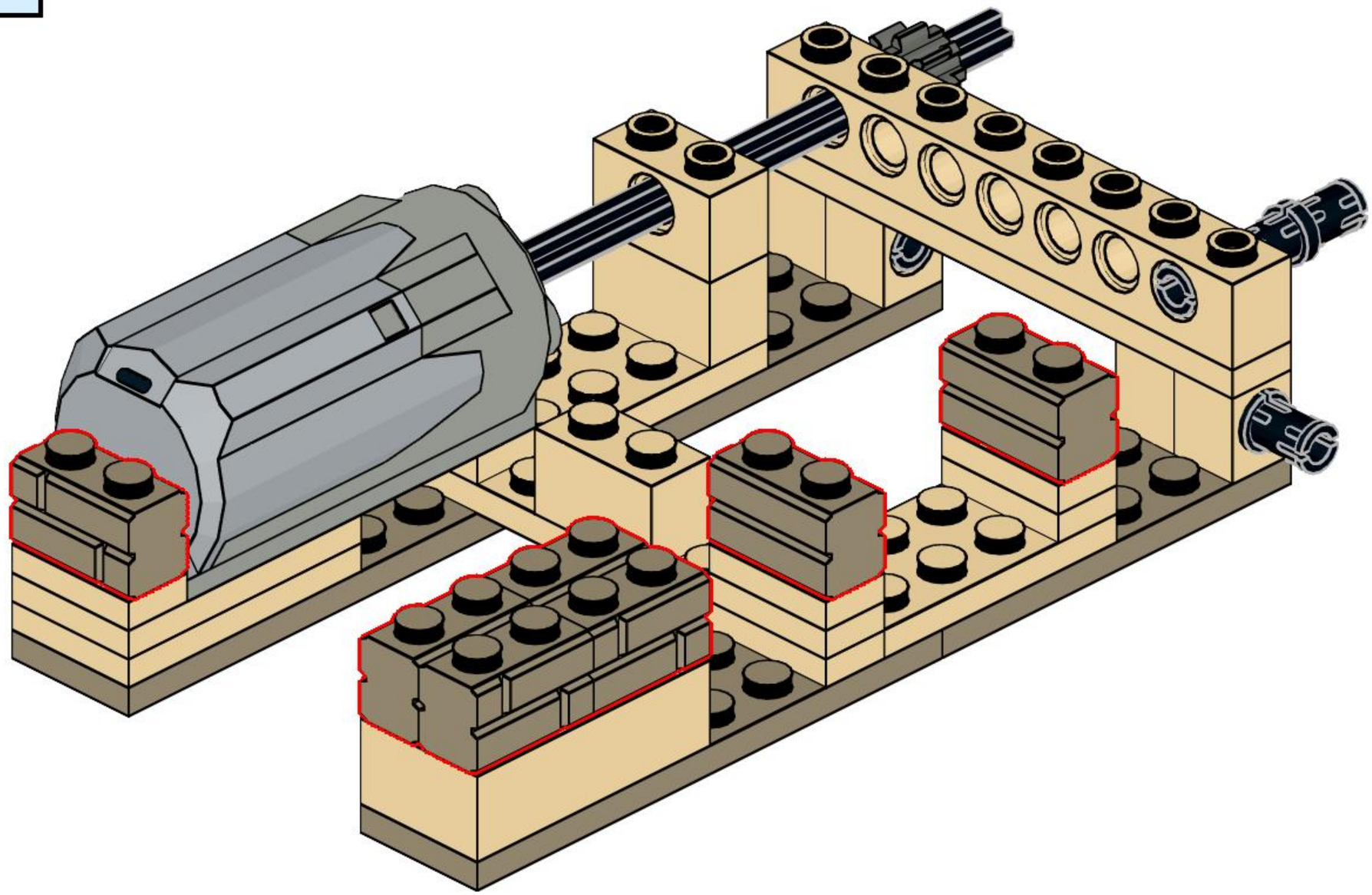

7

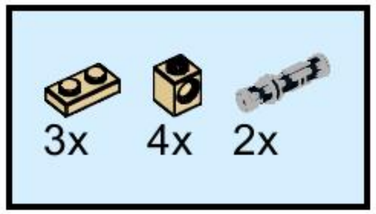

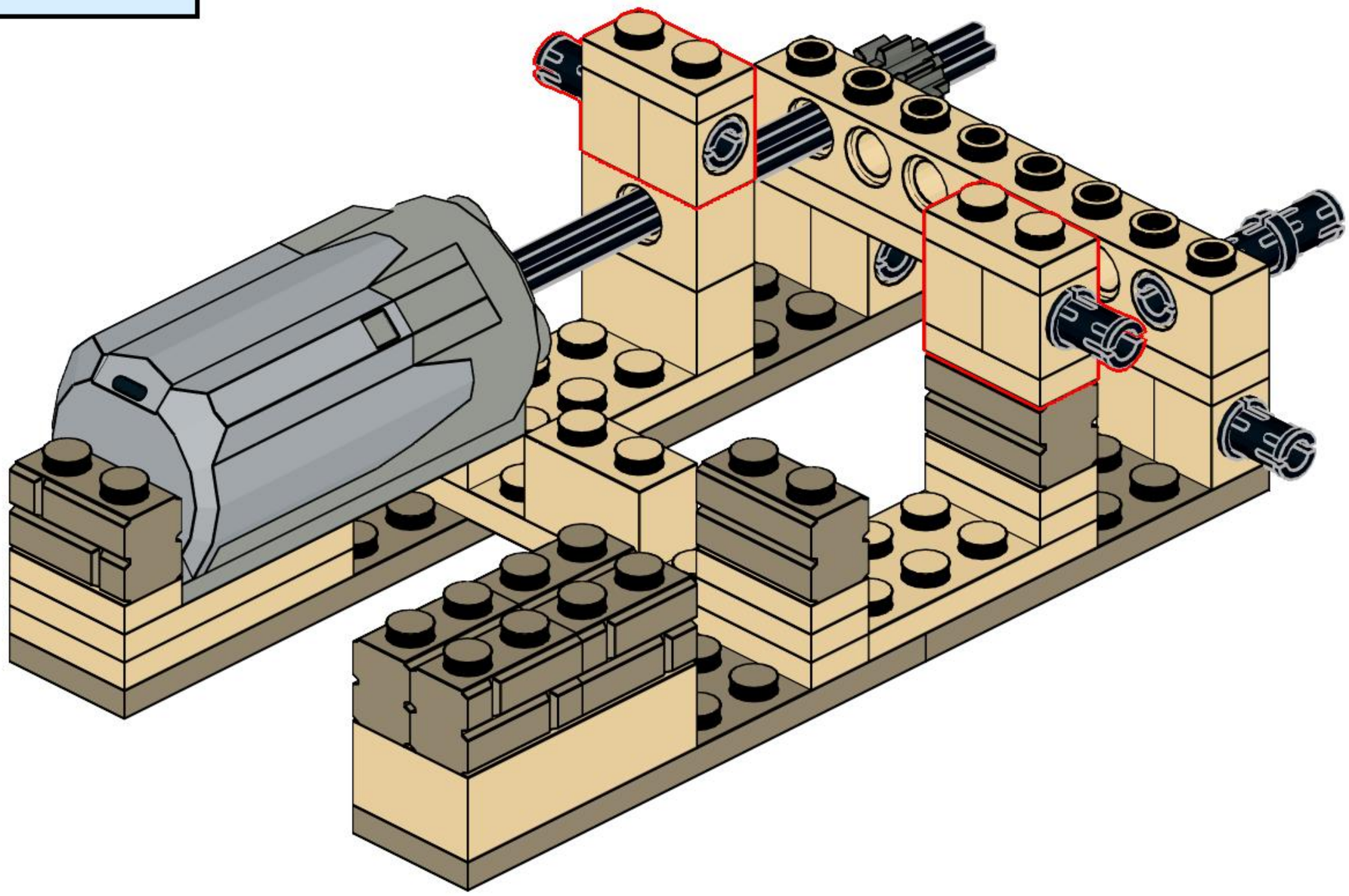

8

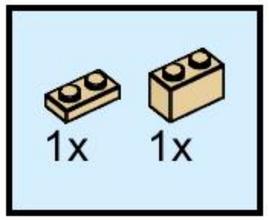

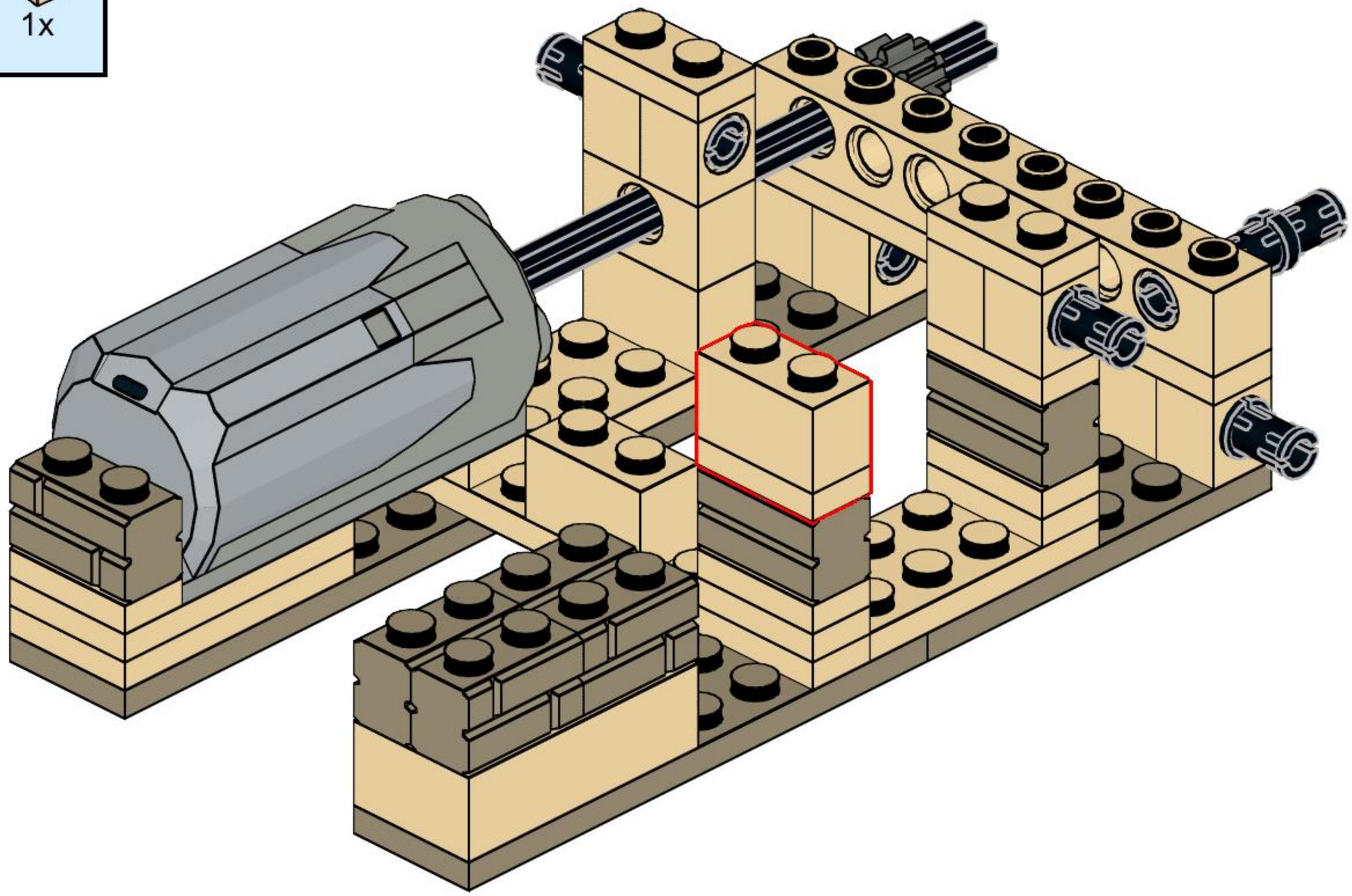

9

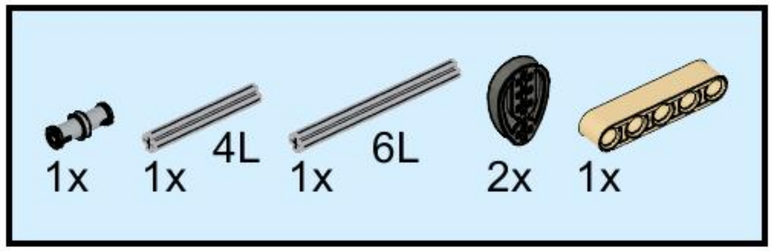

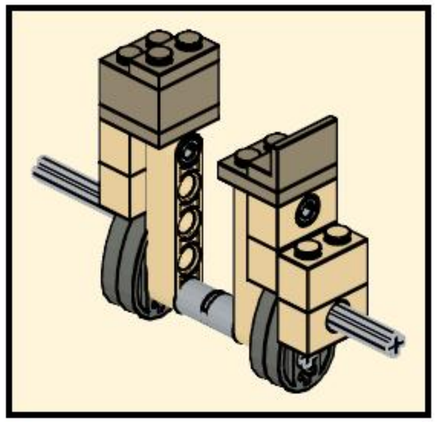

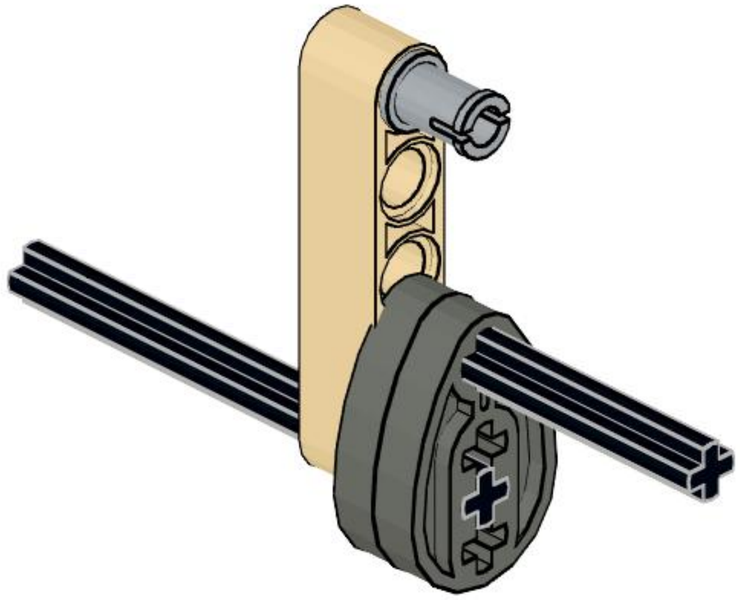

10

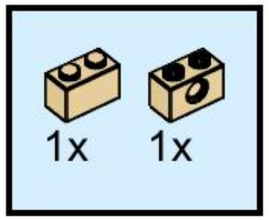

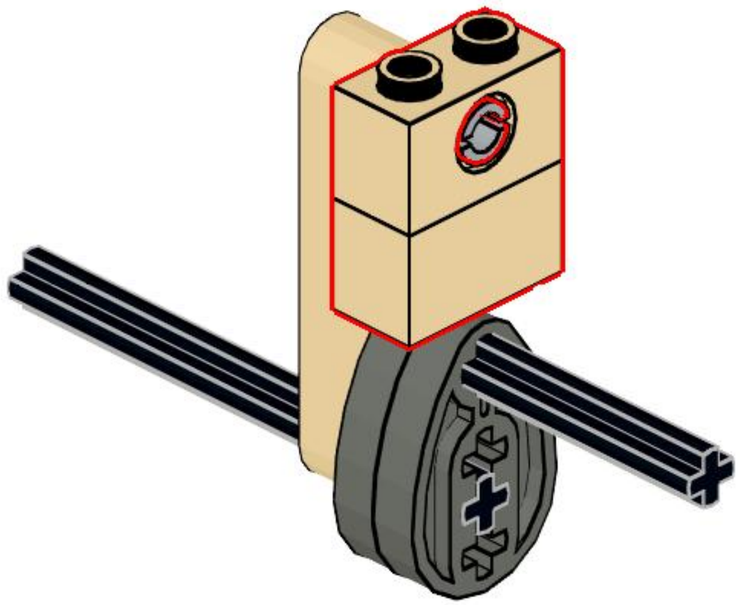

11

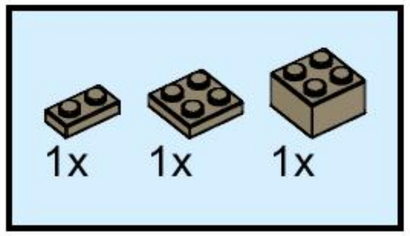

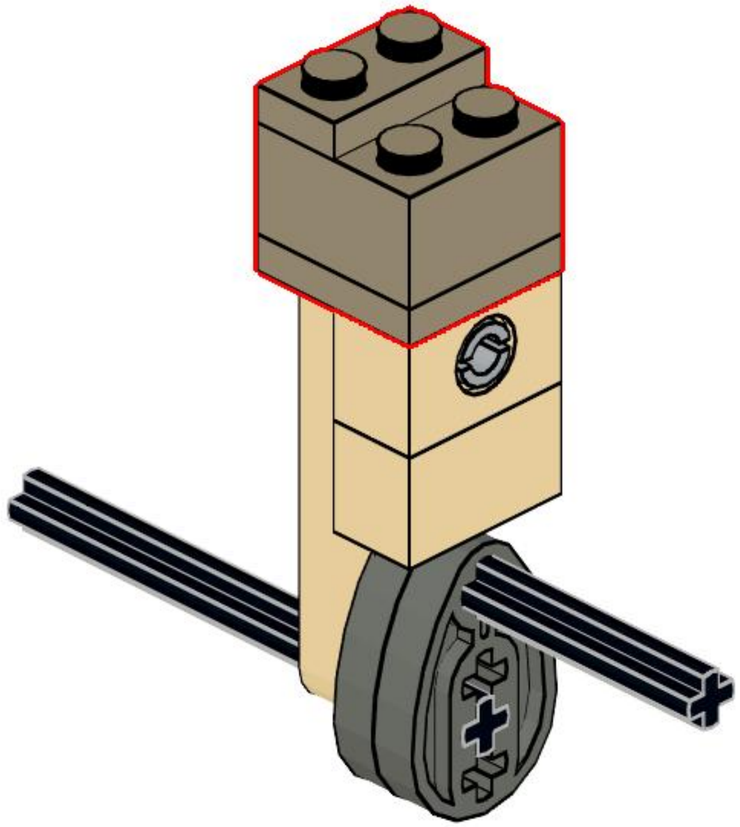

12

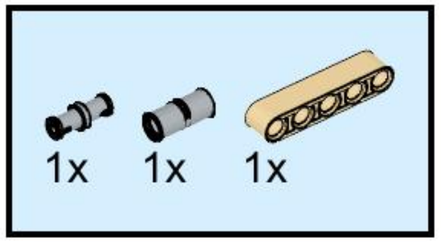

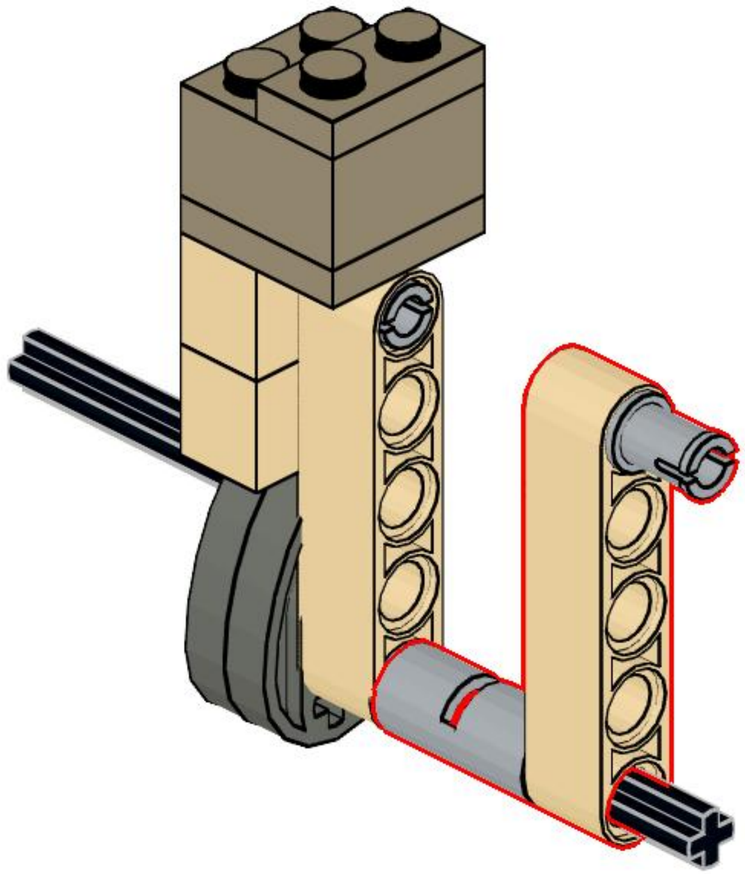

13

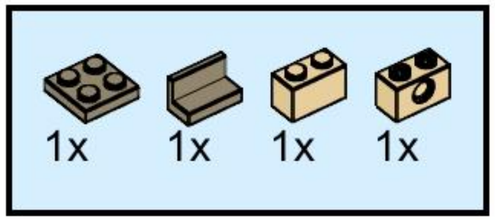

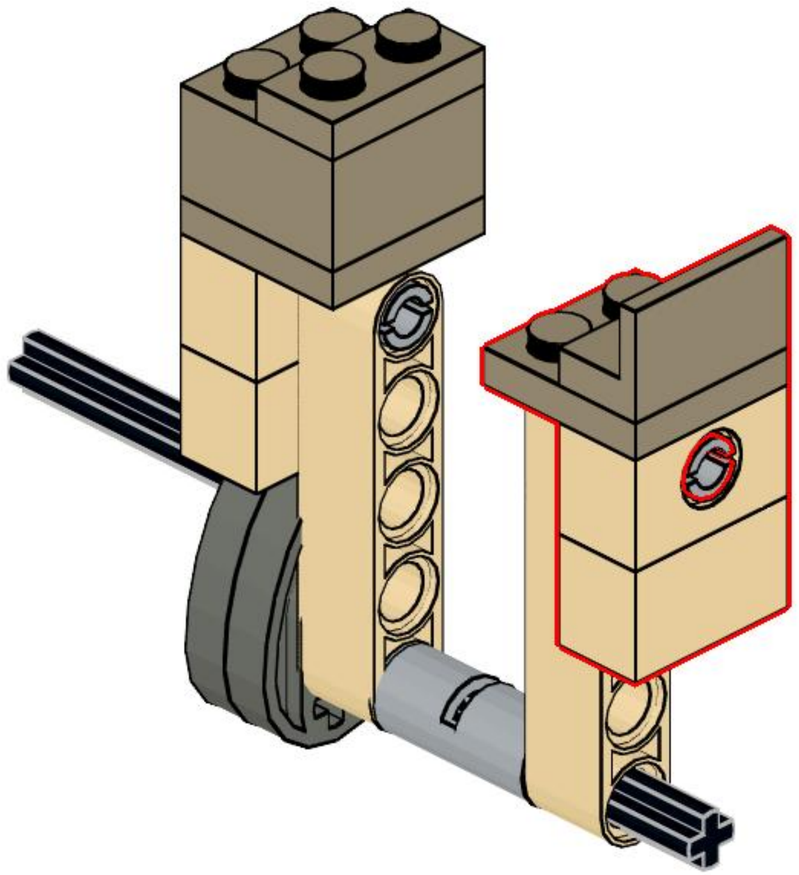

14

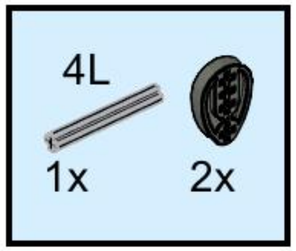

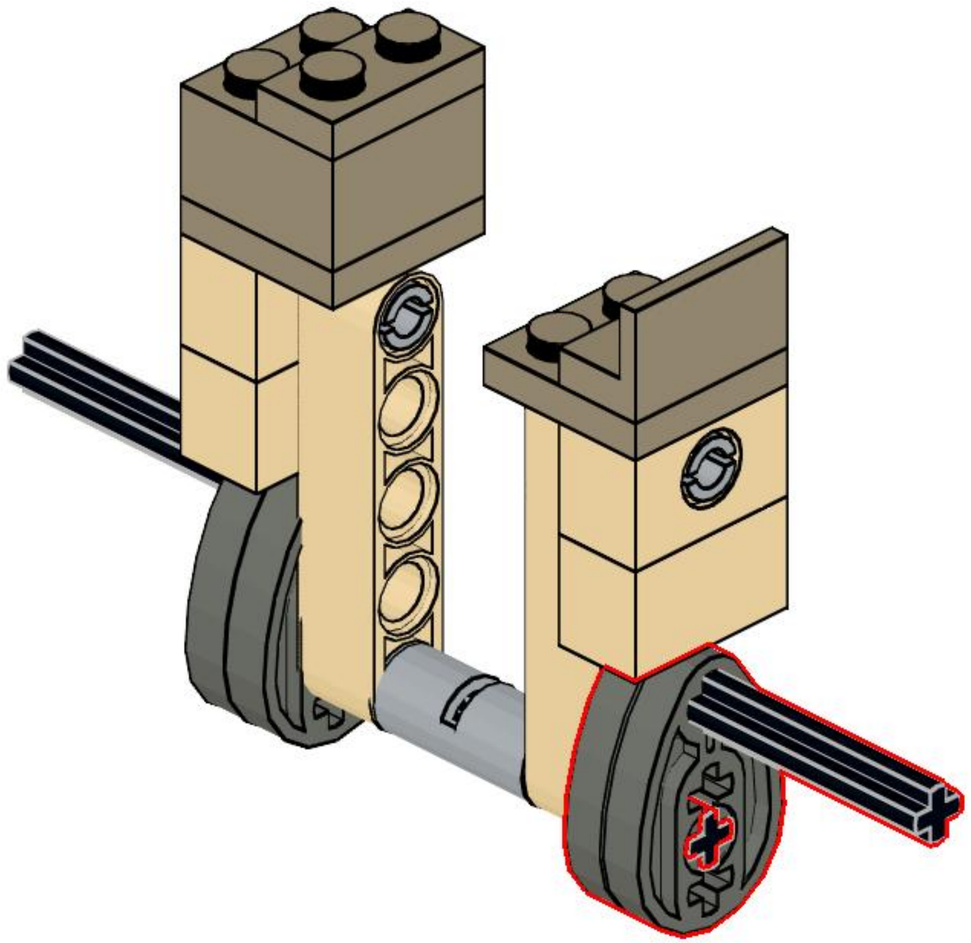

15

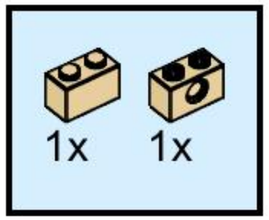

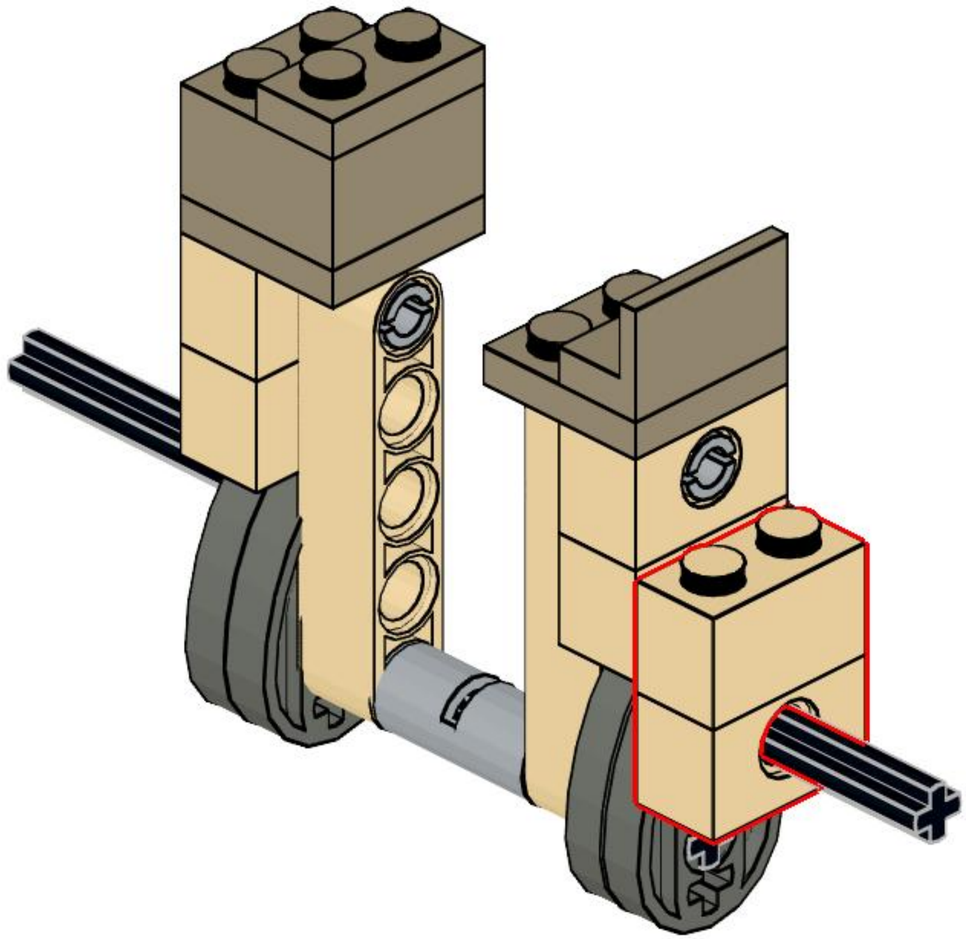

16

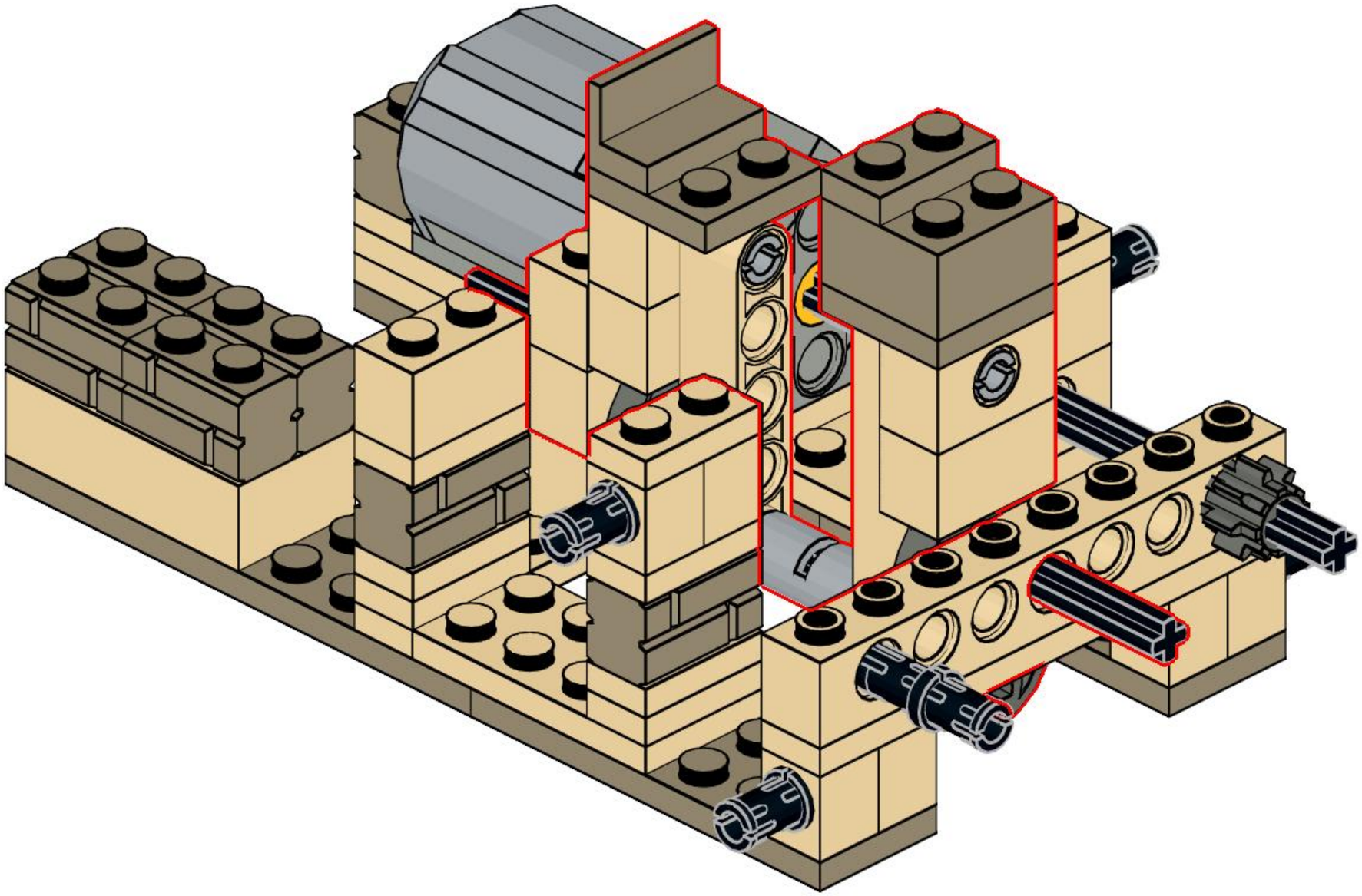

17

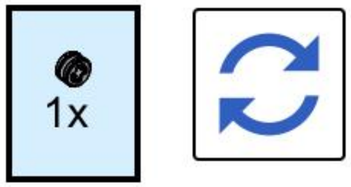

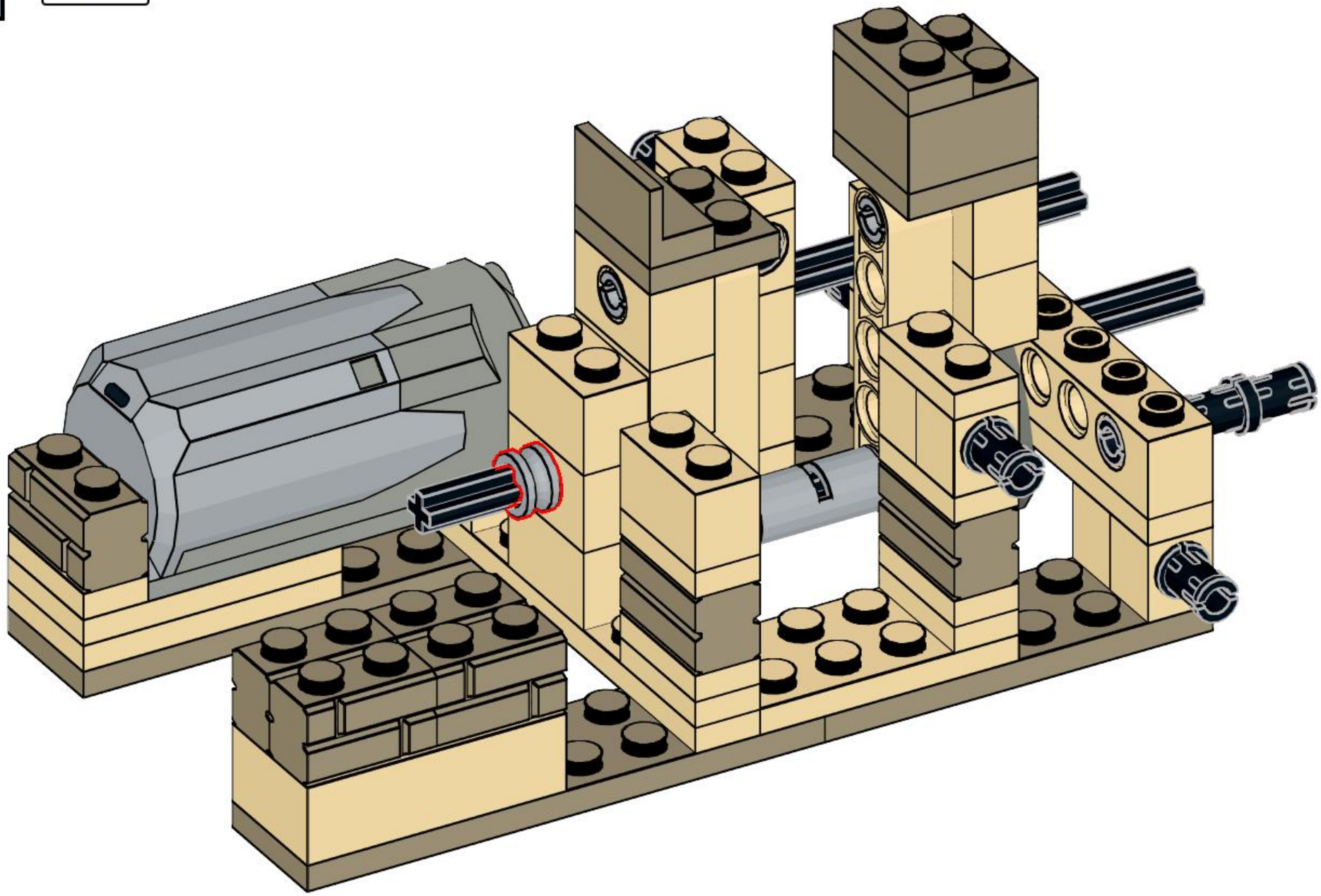

18

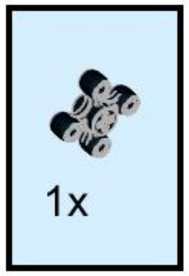

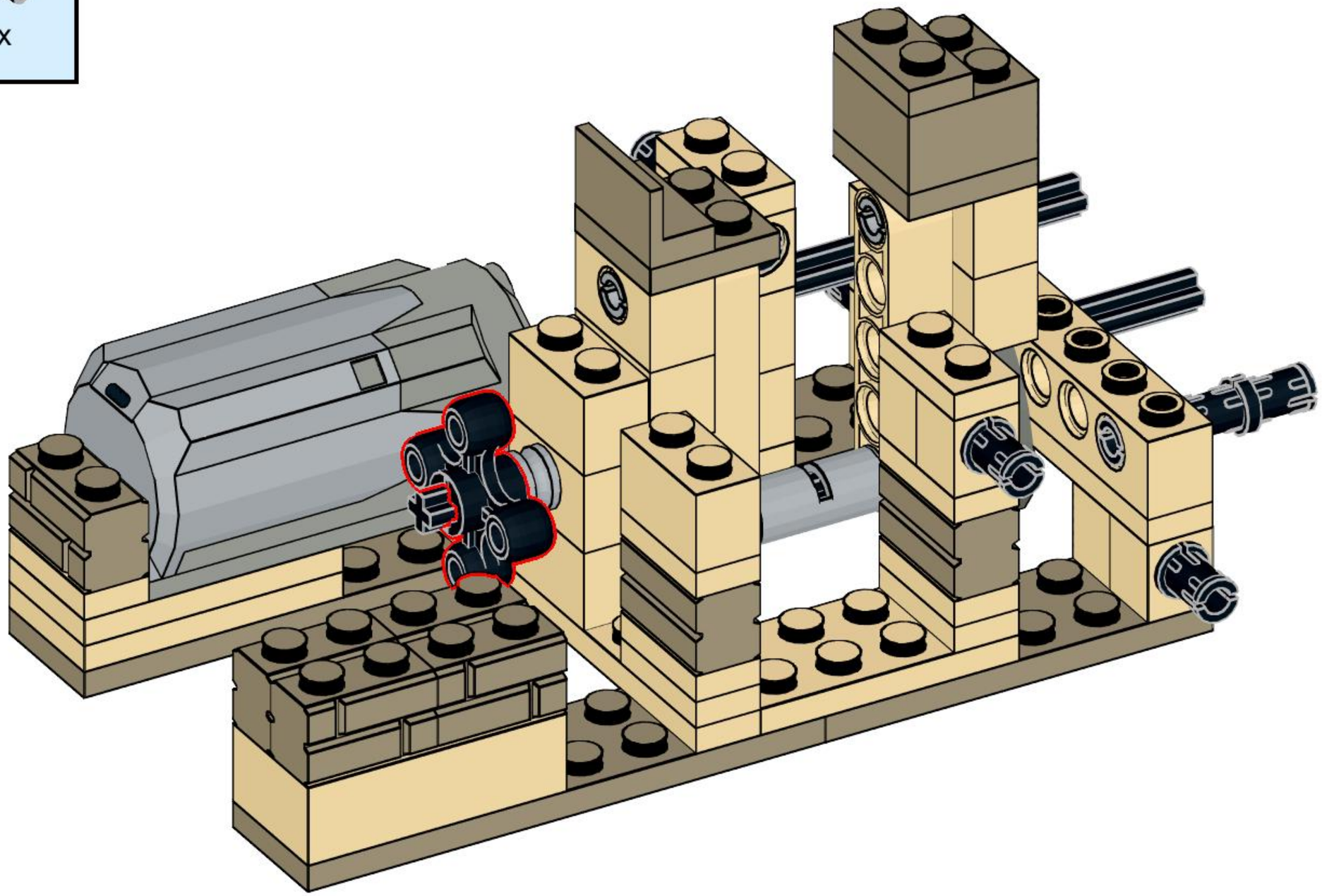

19

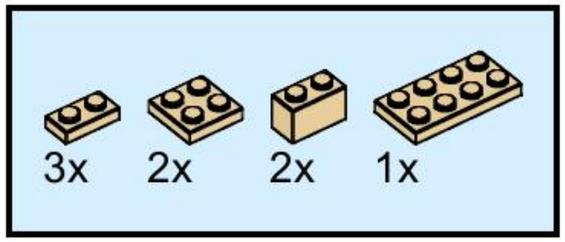

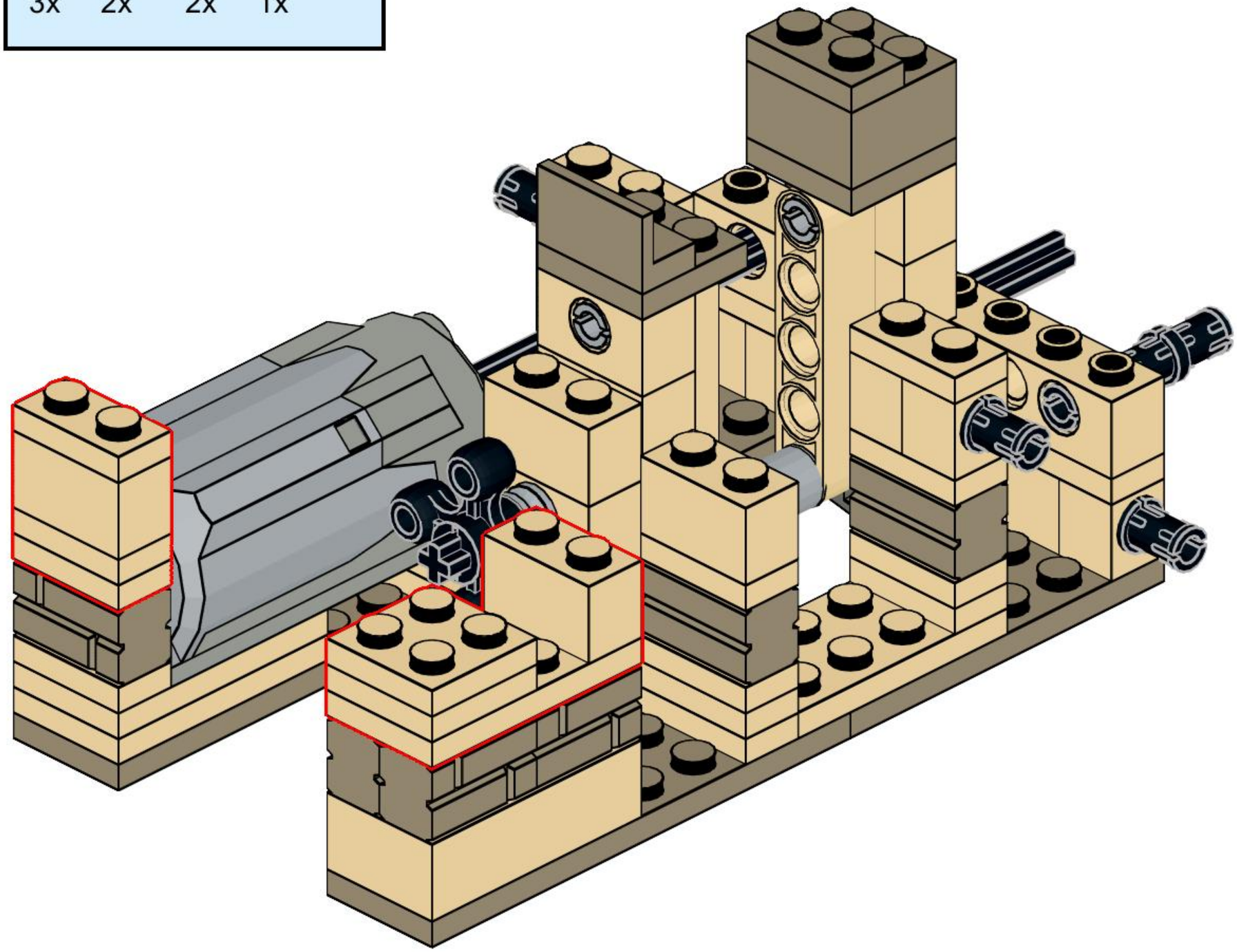

20

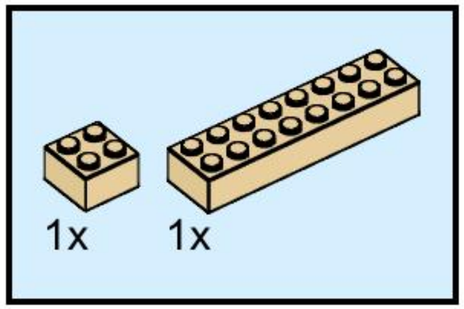

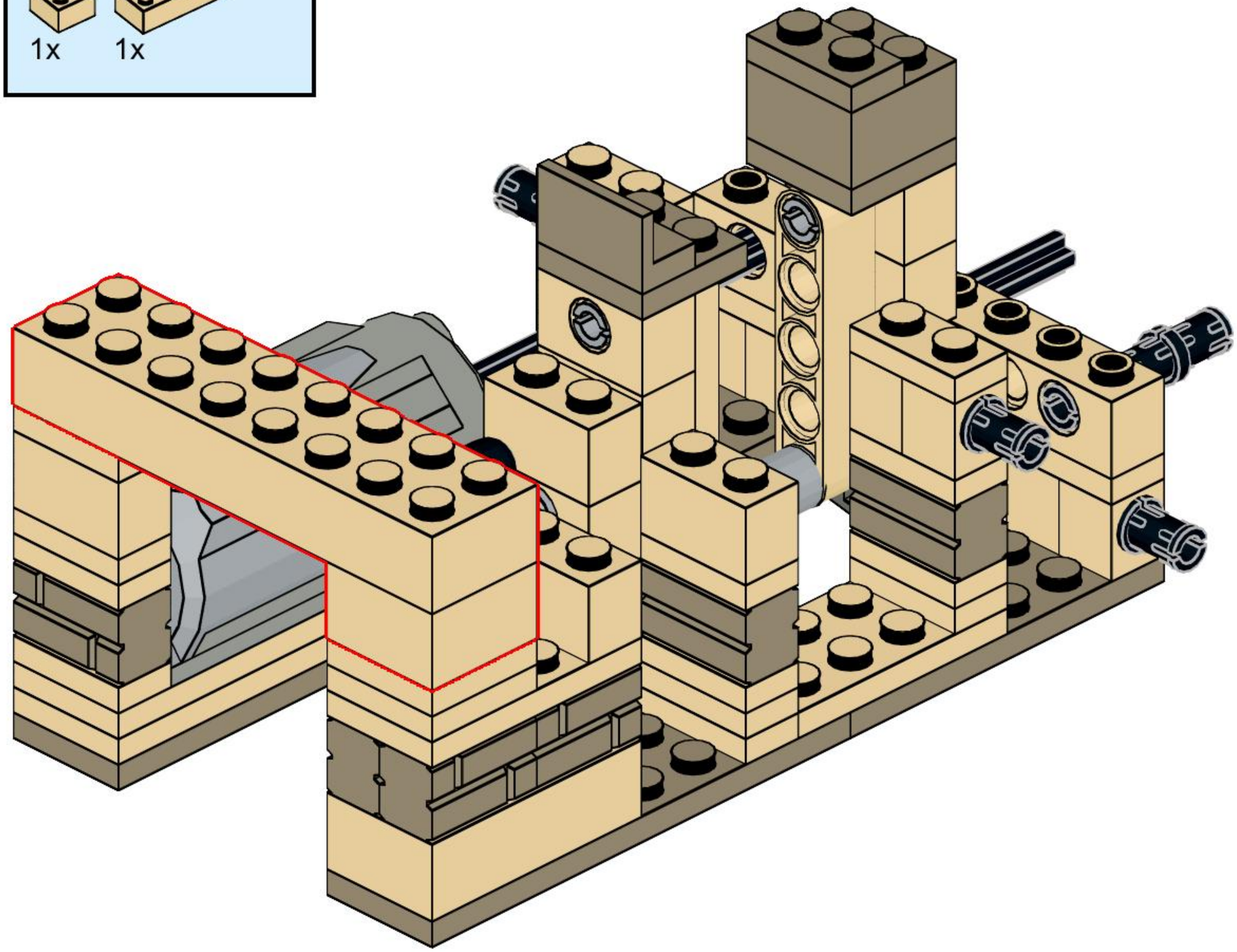

21

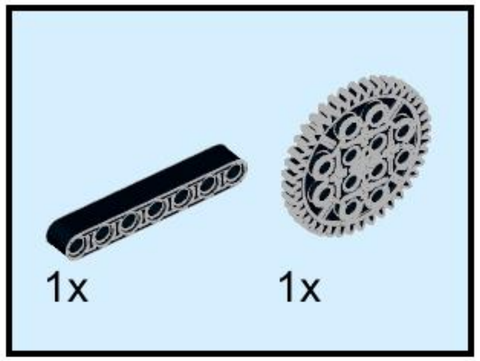

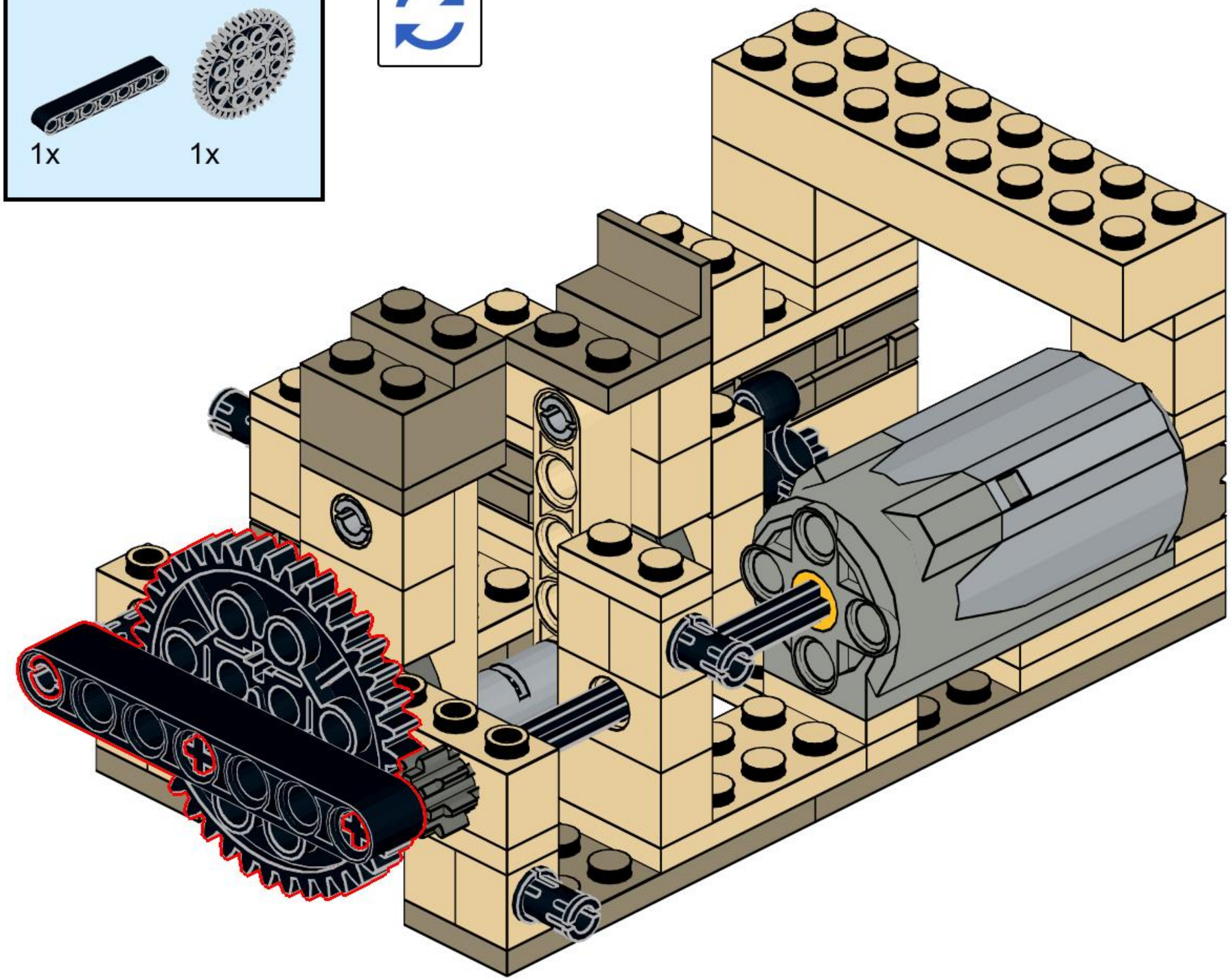

22

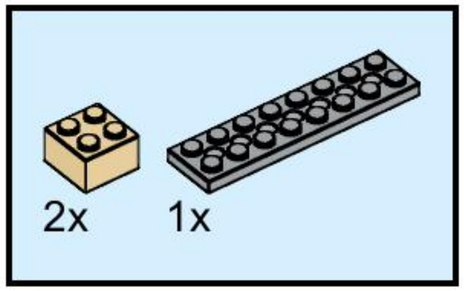

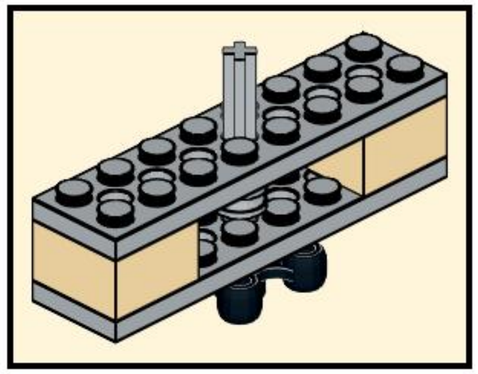

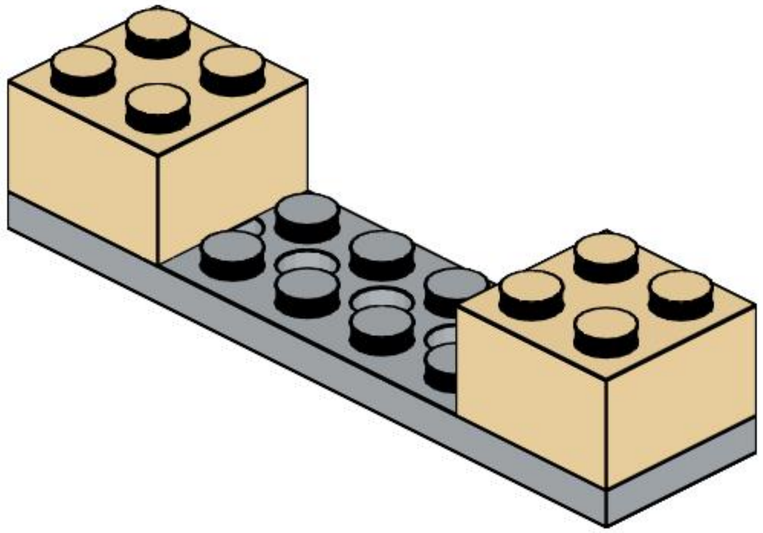

23

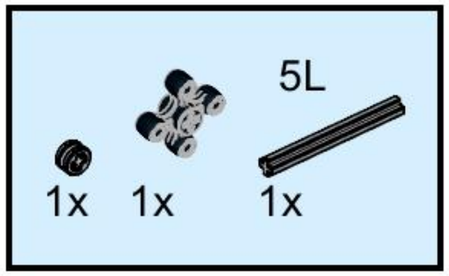

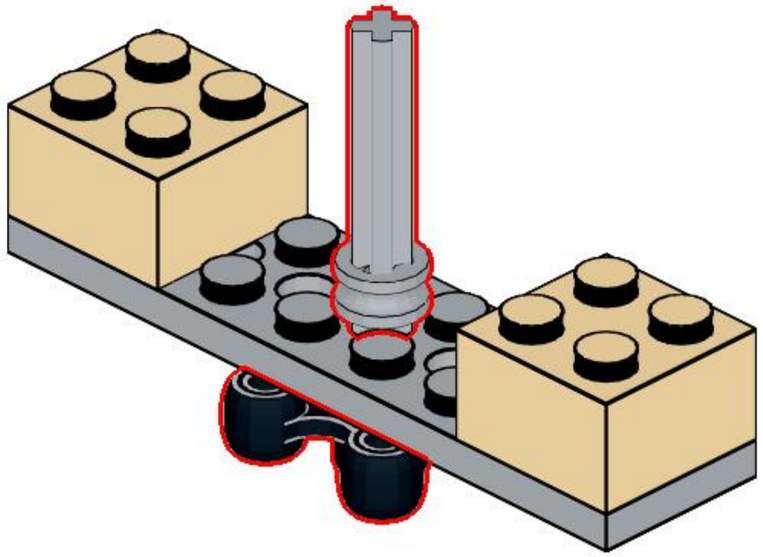

24

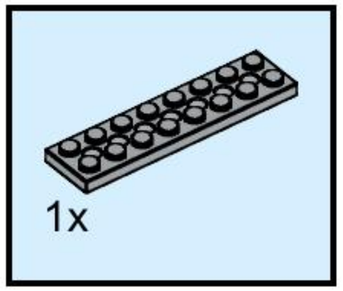

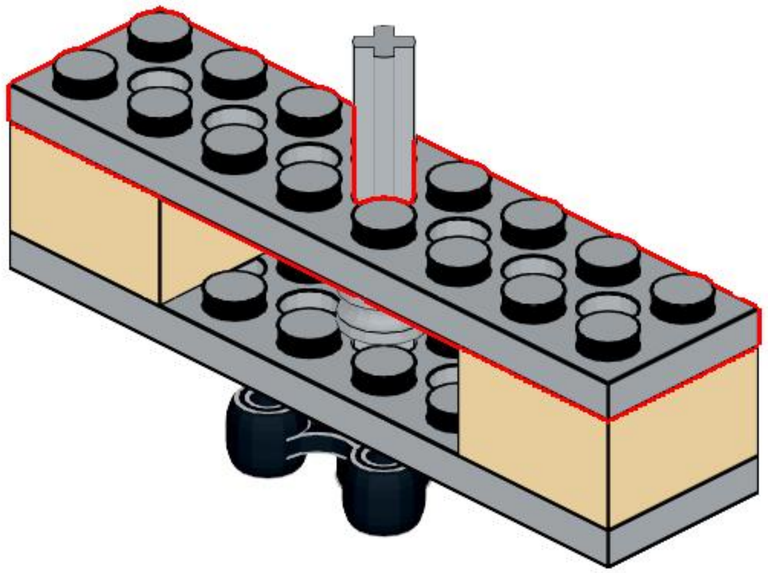

25

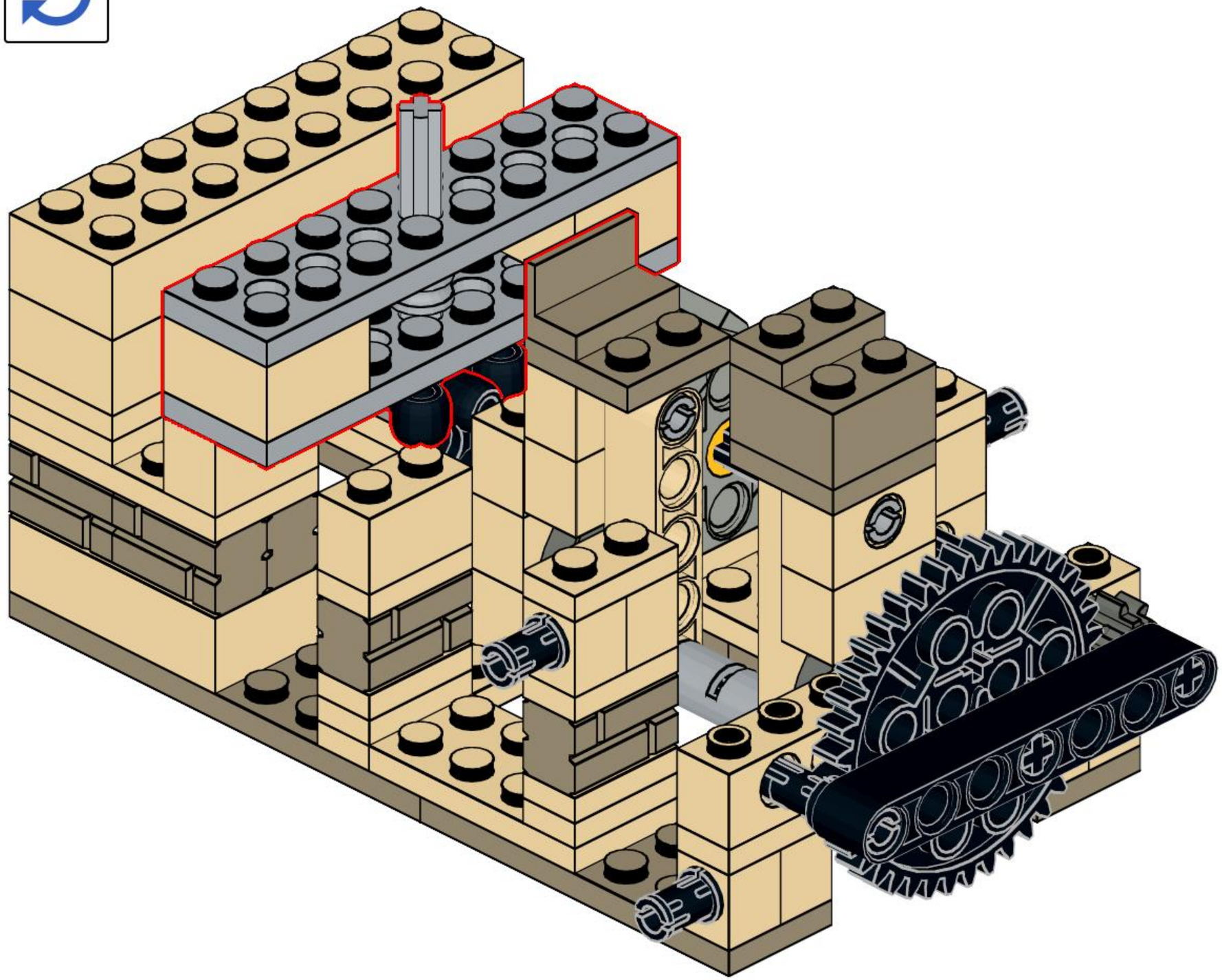

26

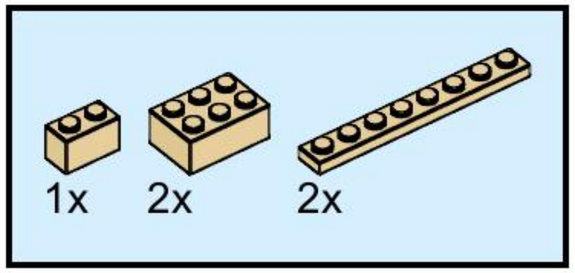

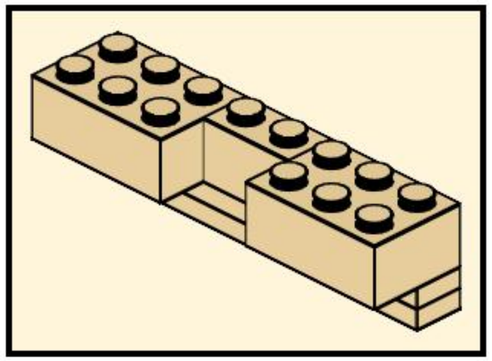

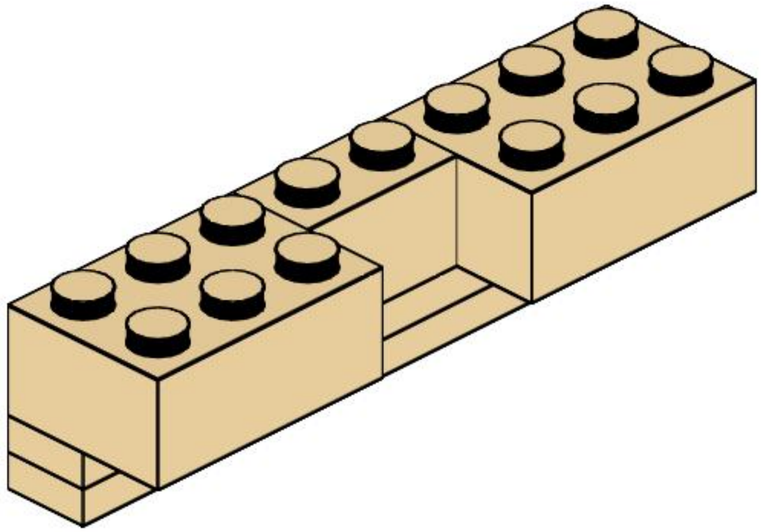

27

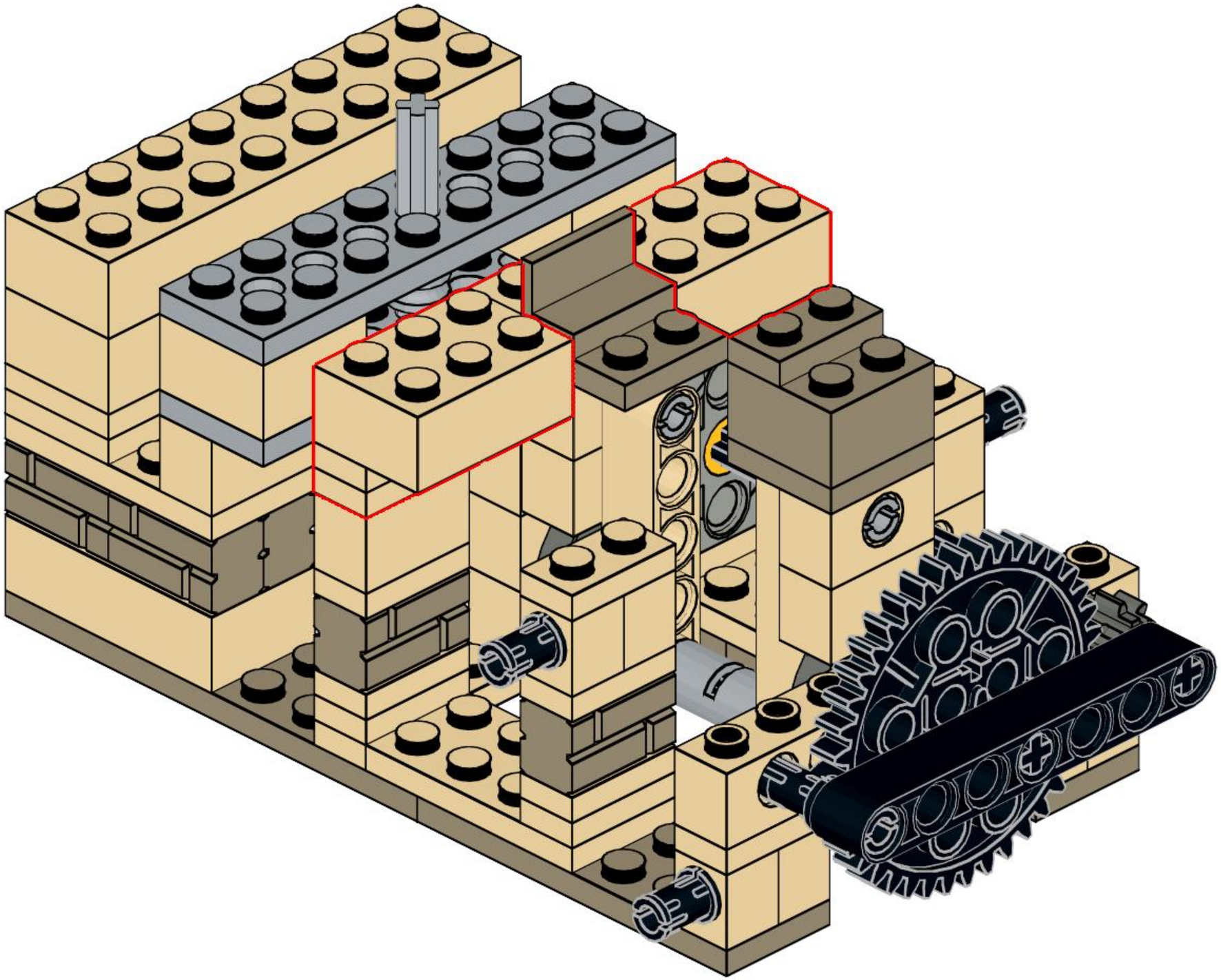

28

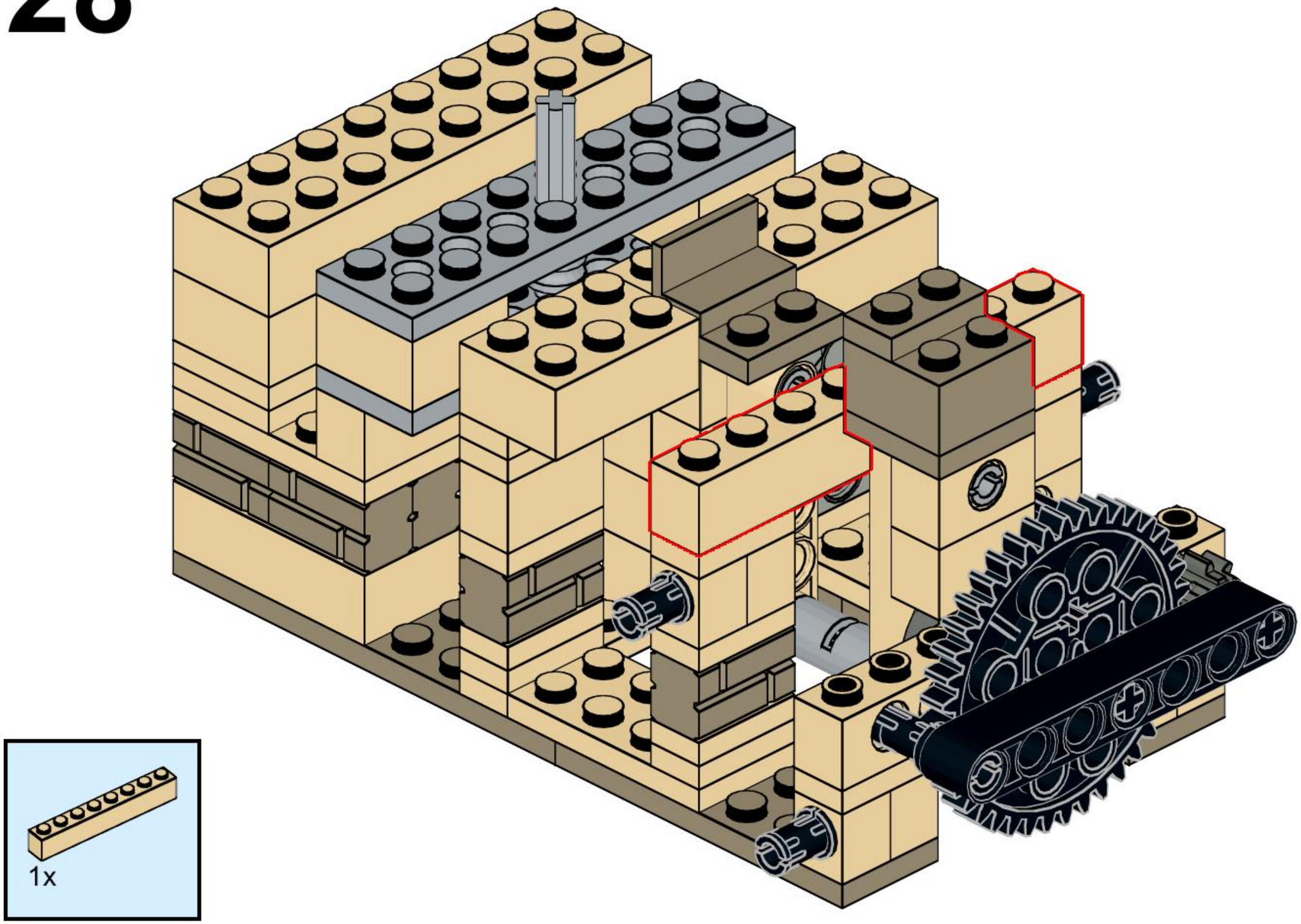

29

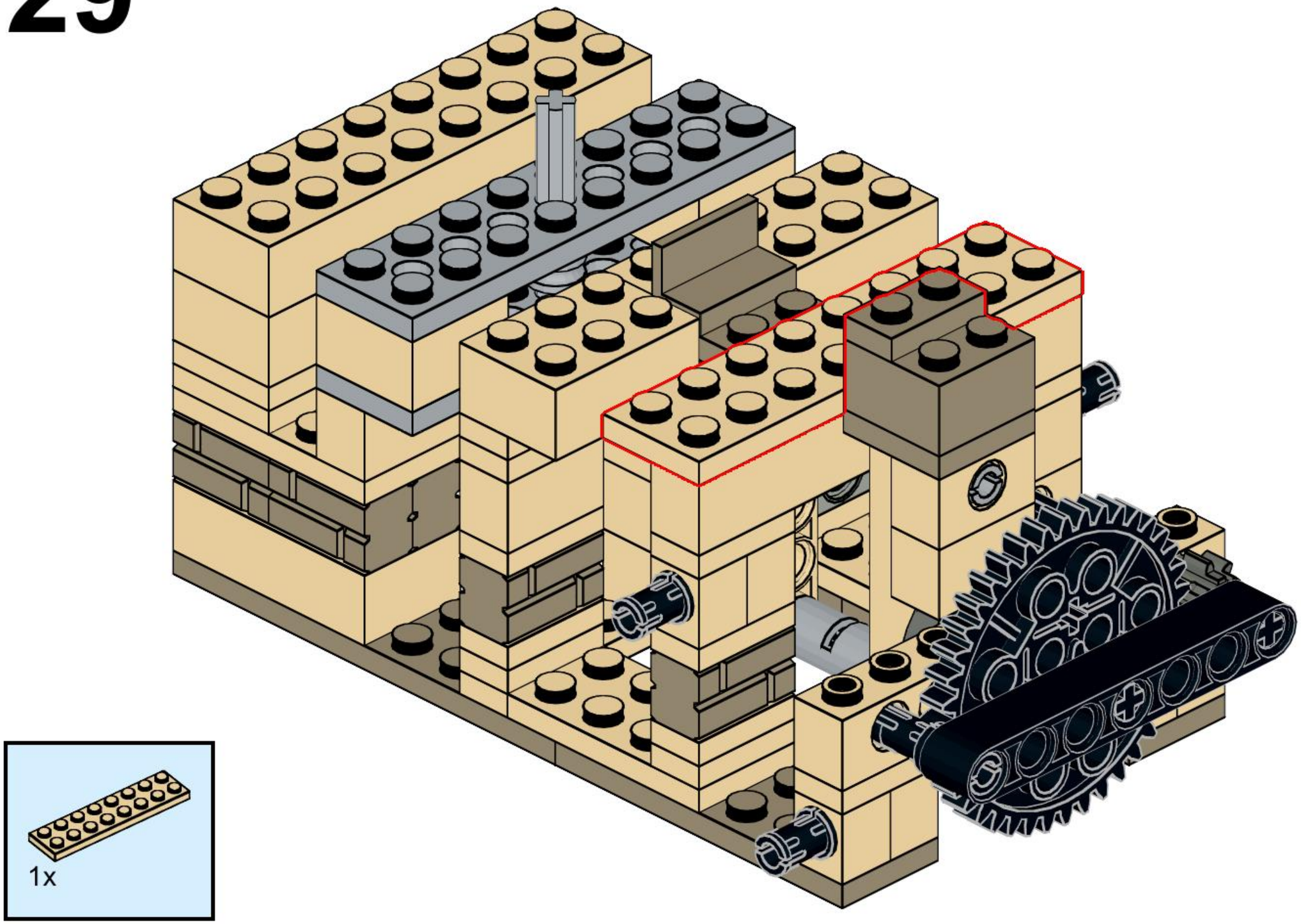

30

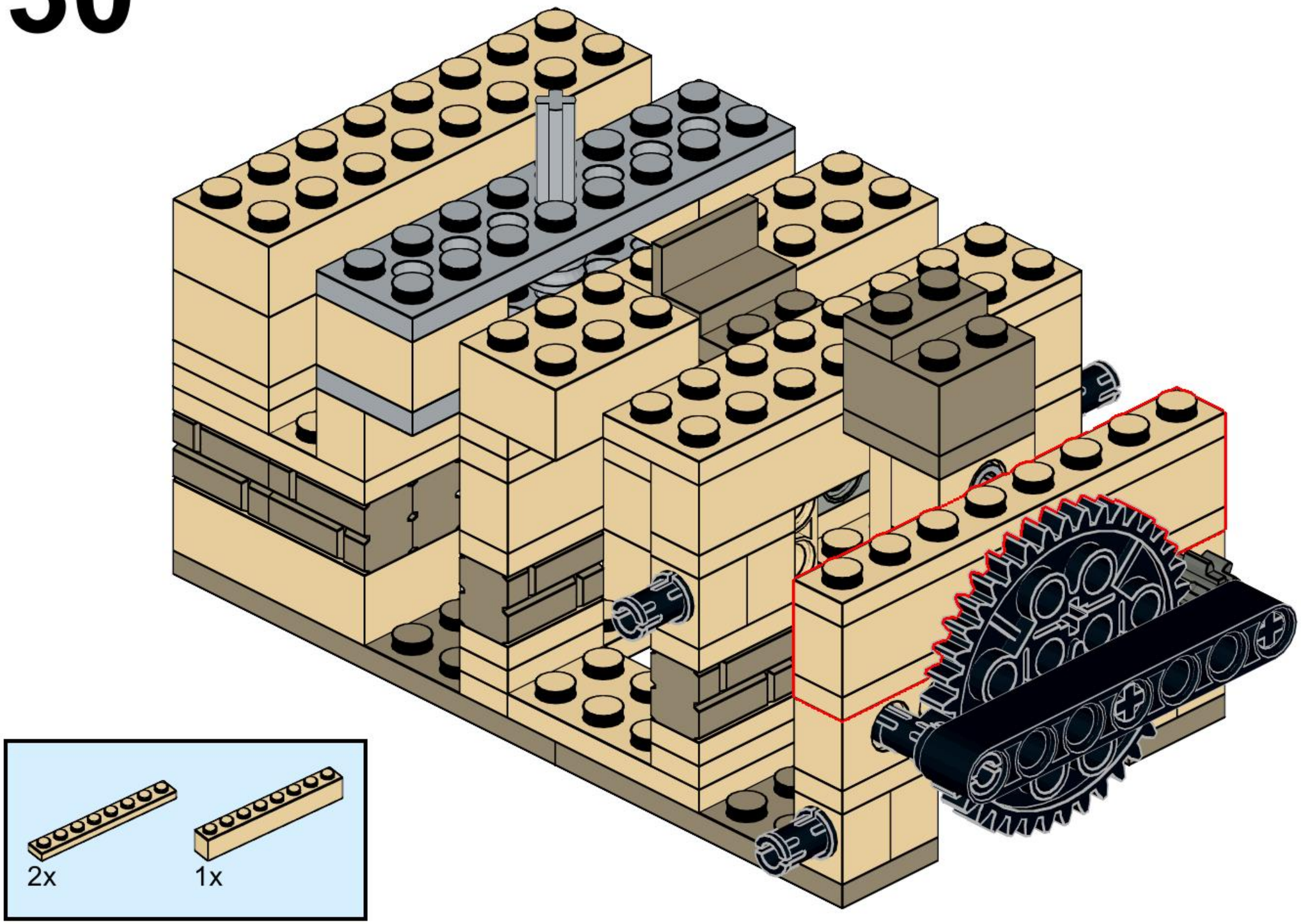

31

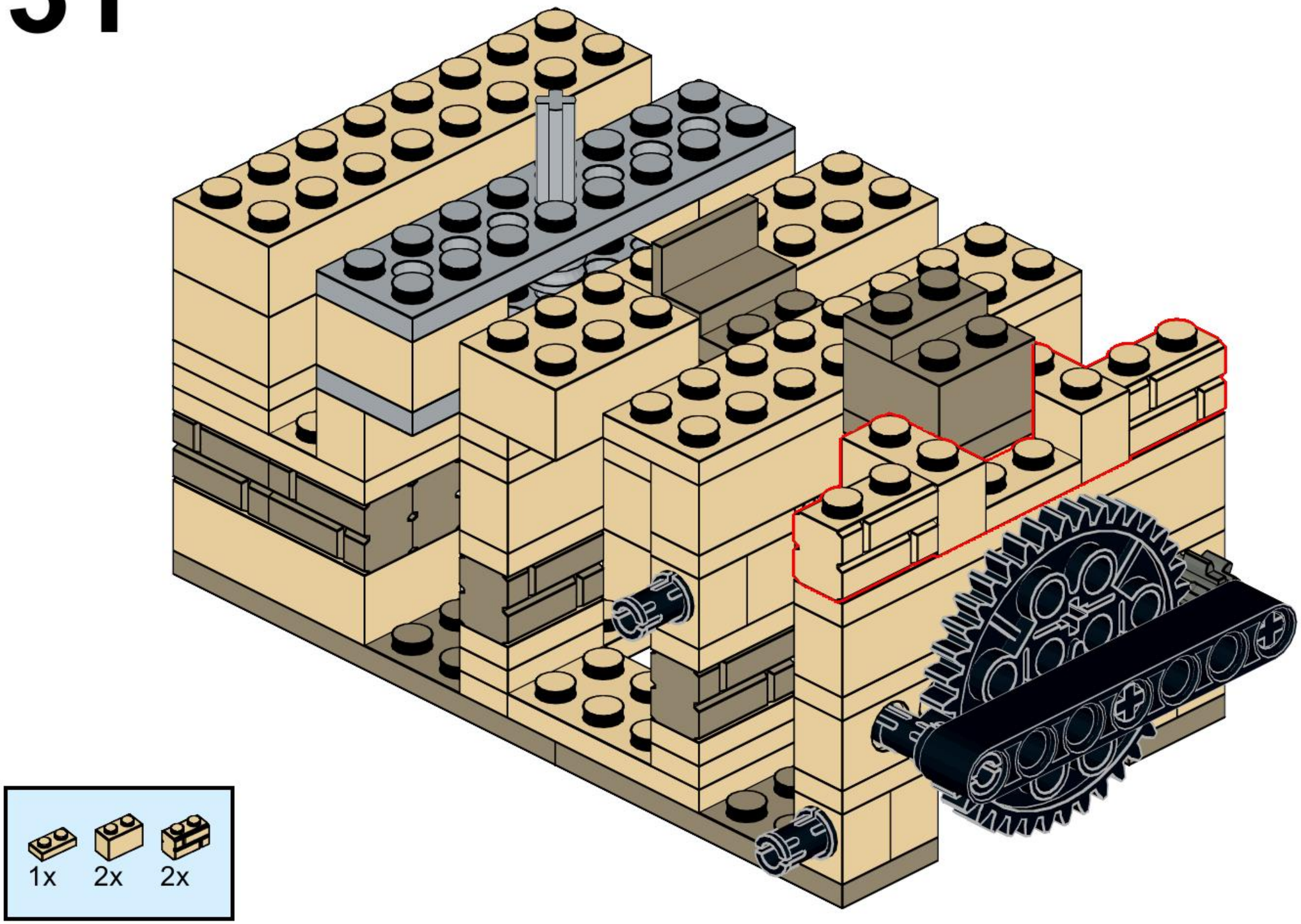

32

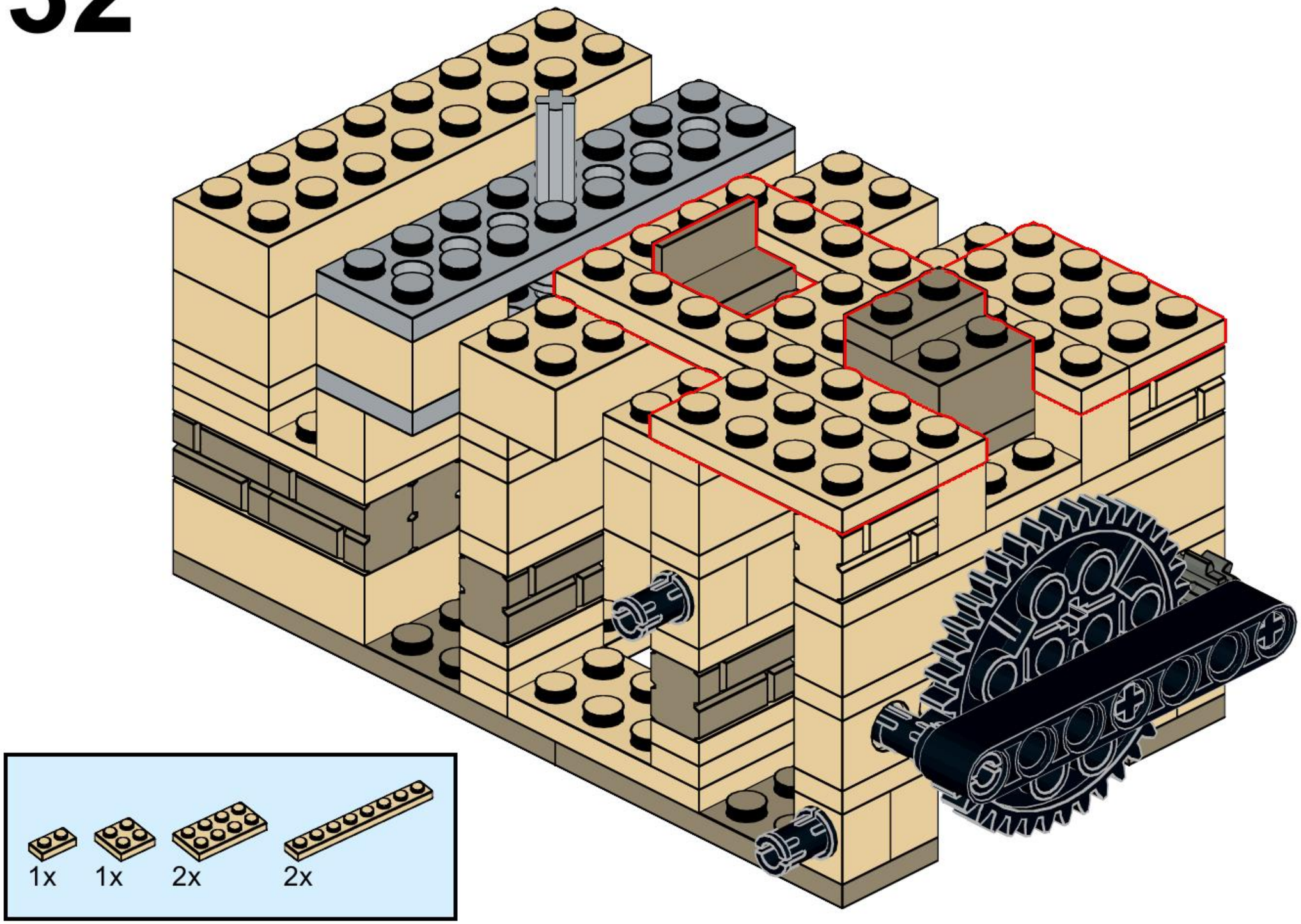

33

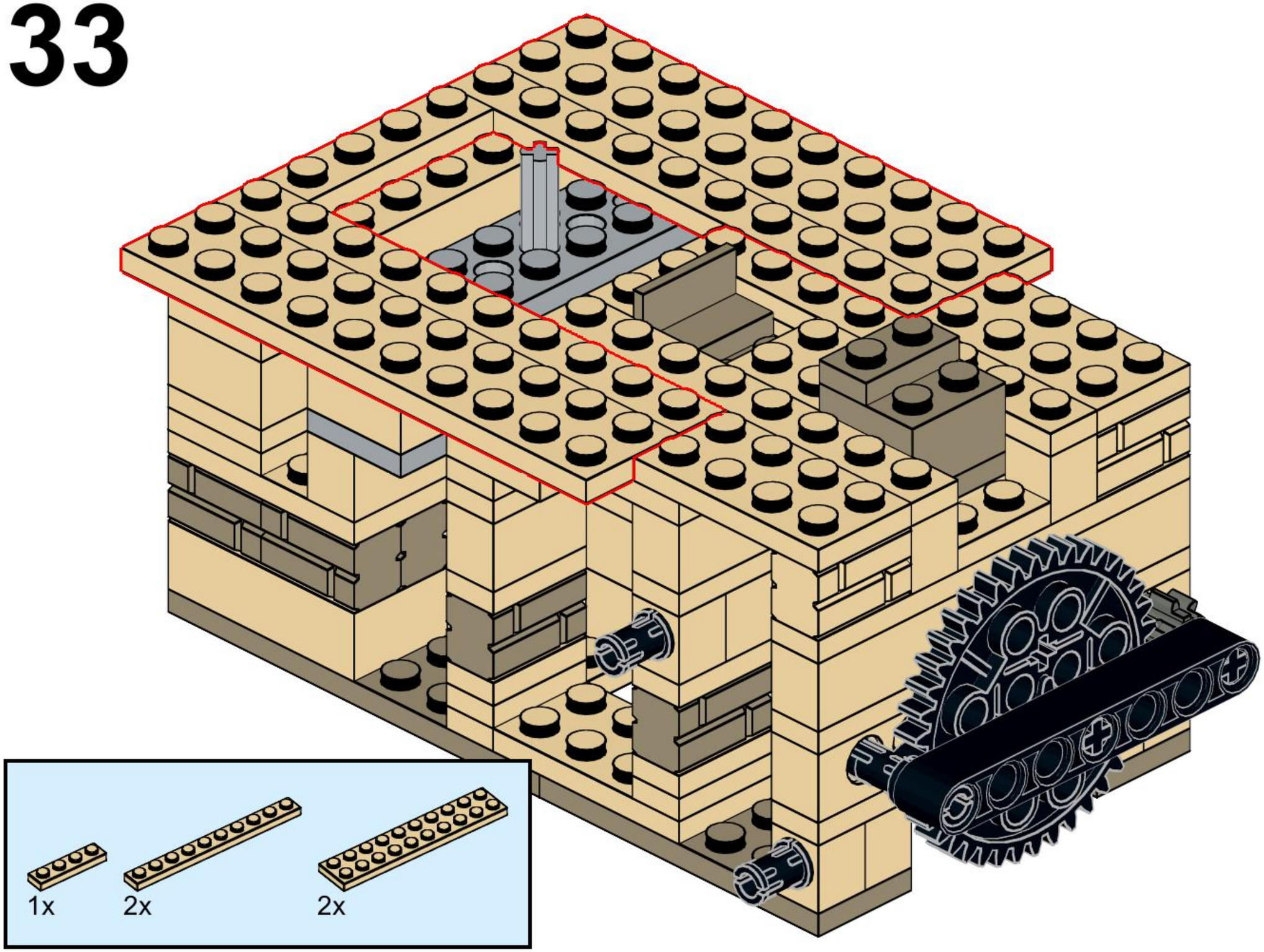

34

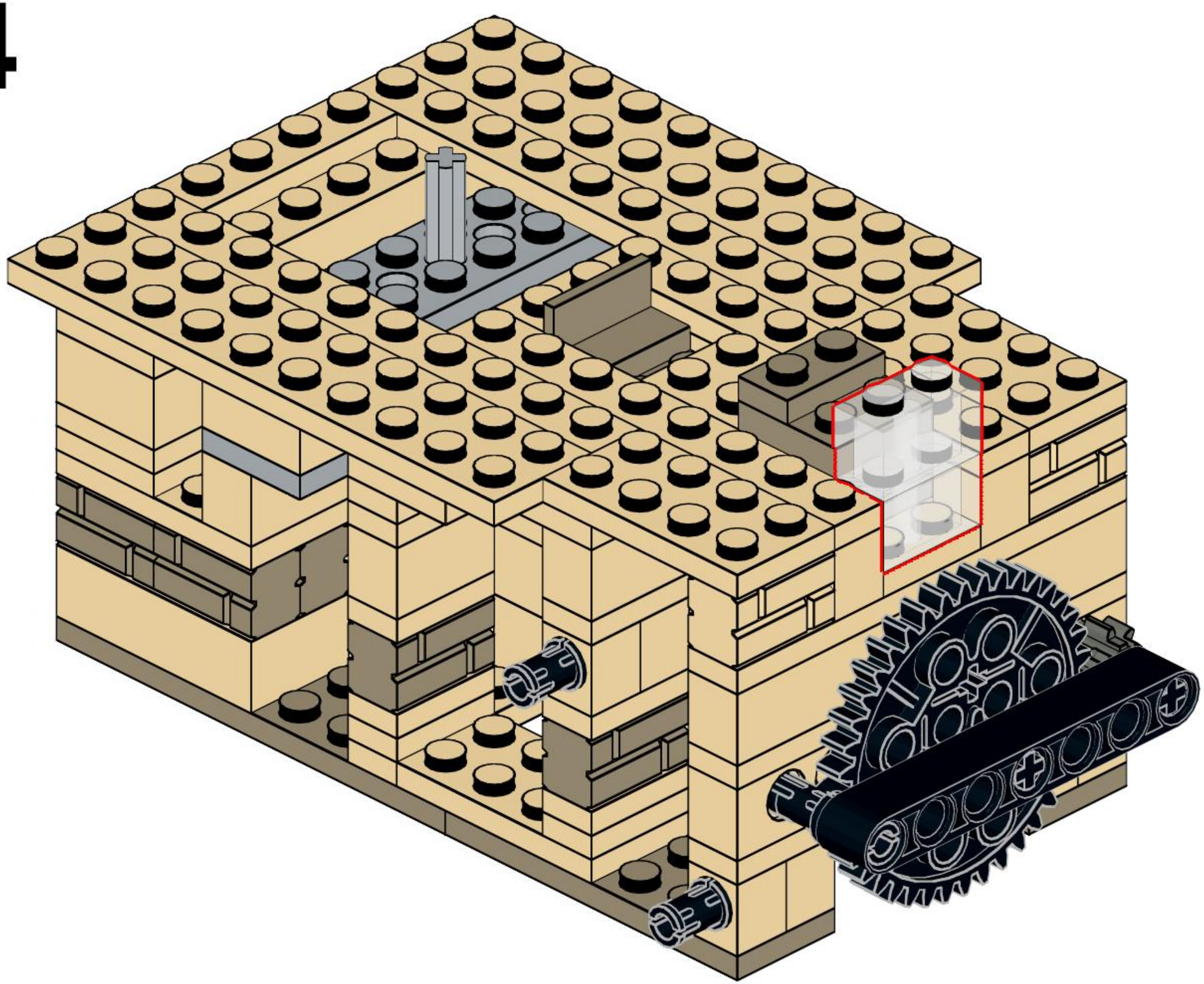

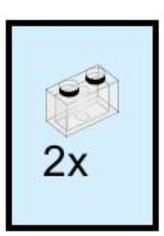

35

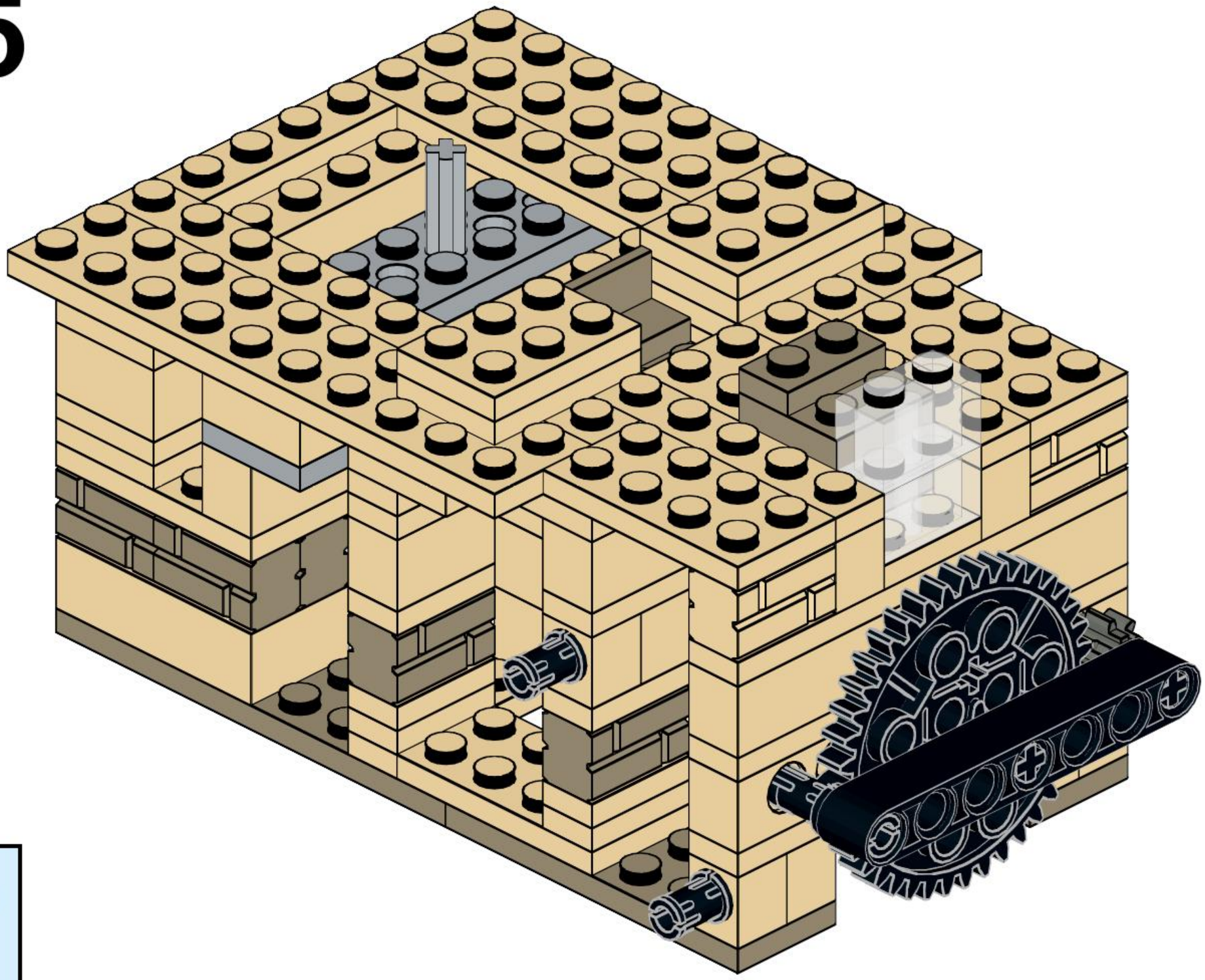

36

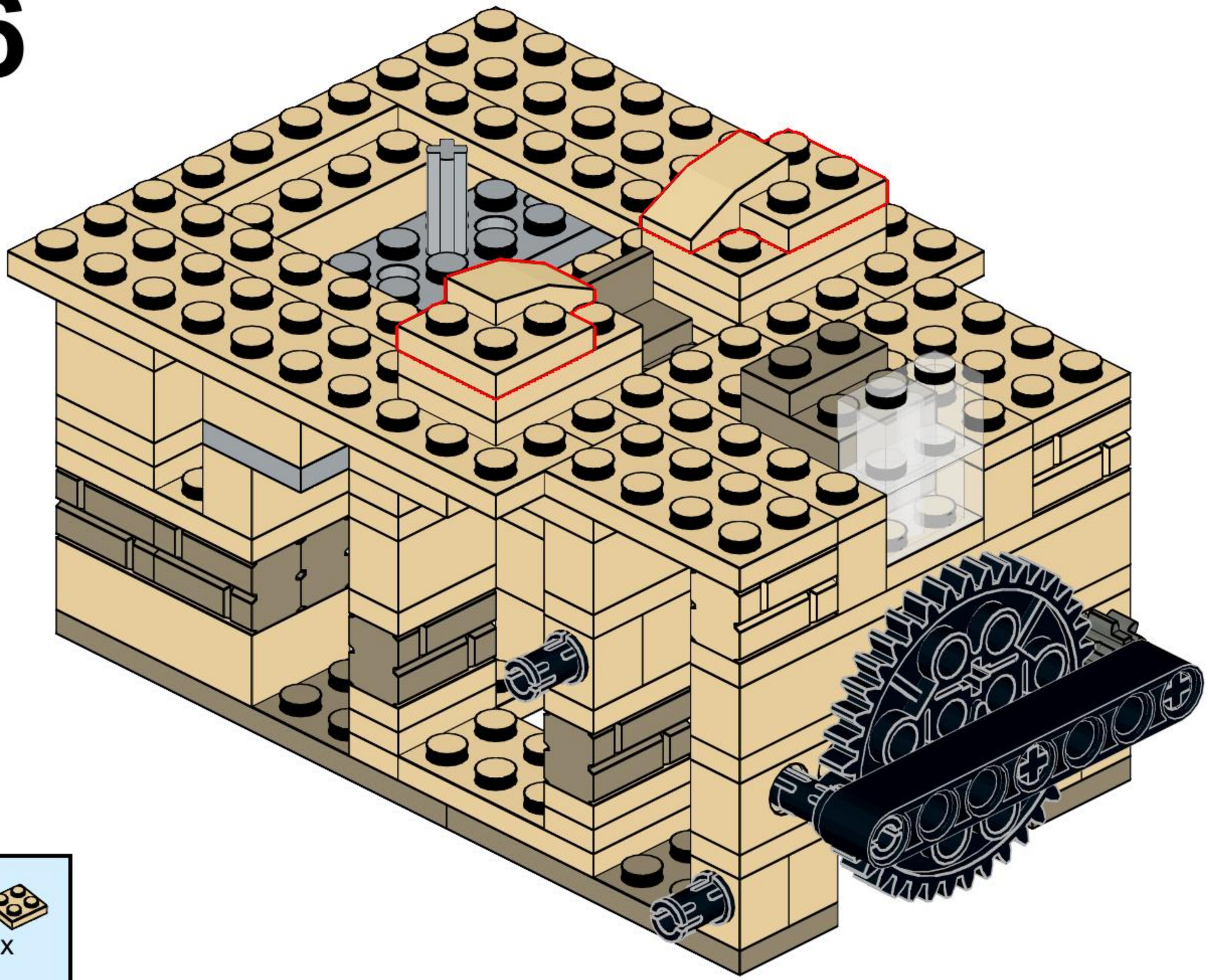

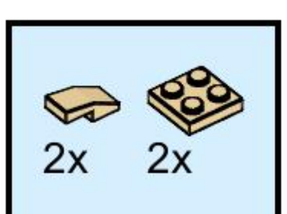

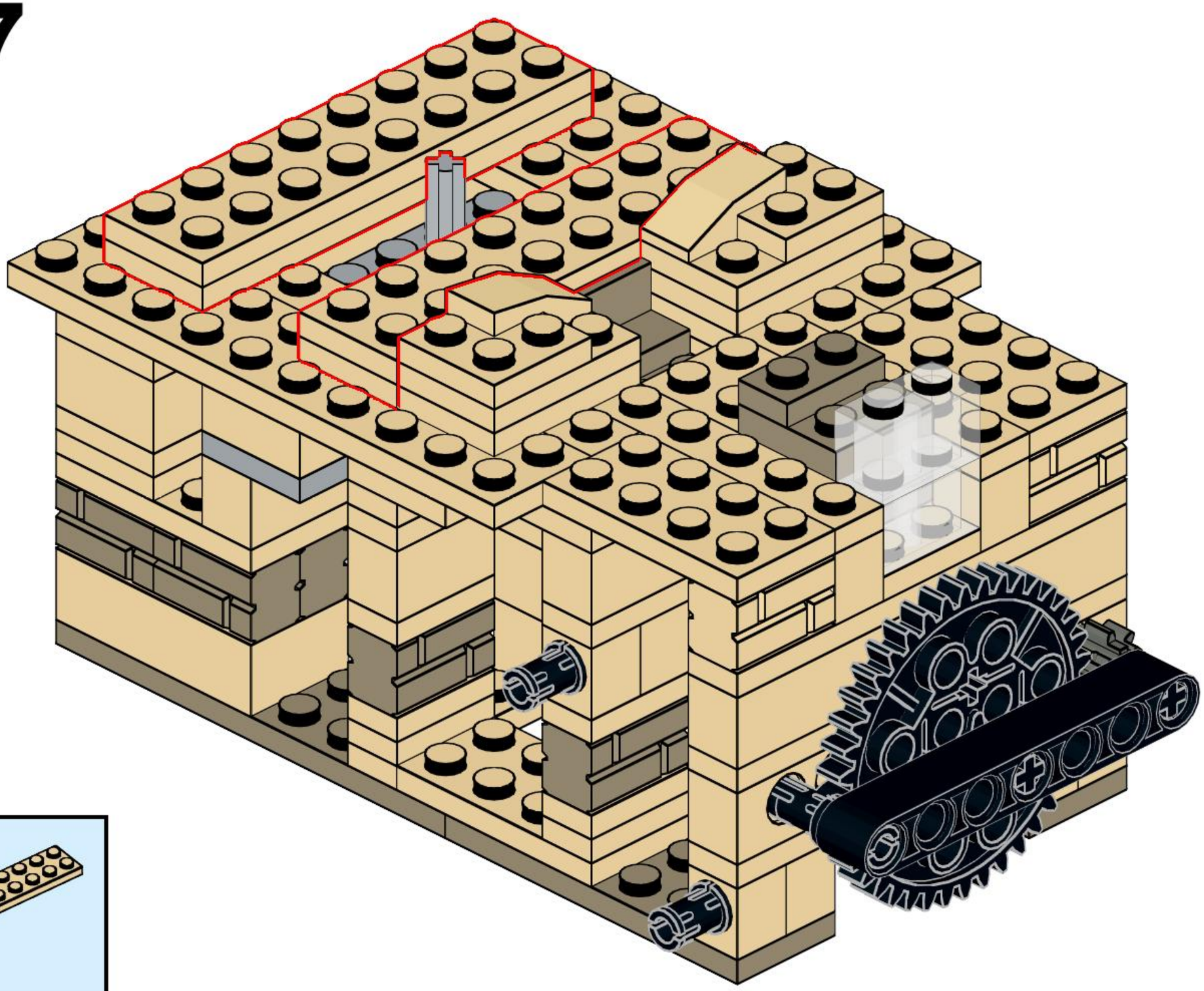

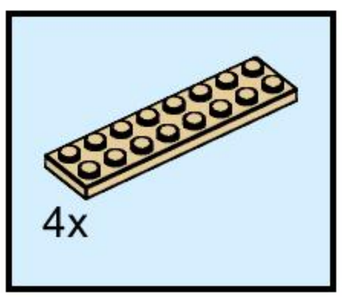
4x

38

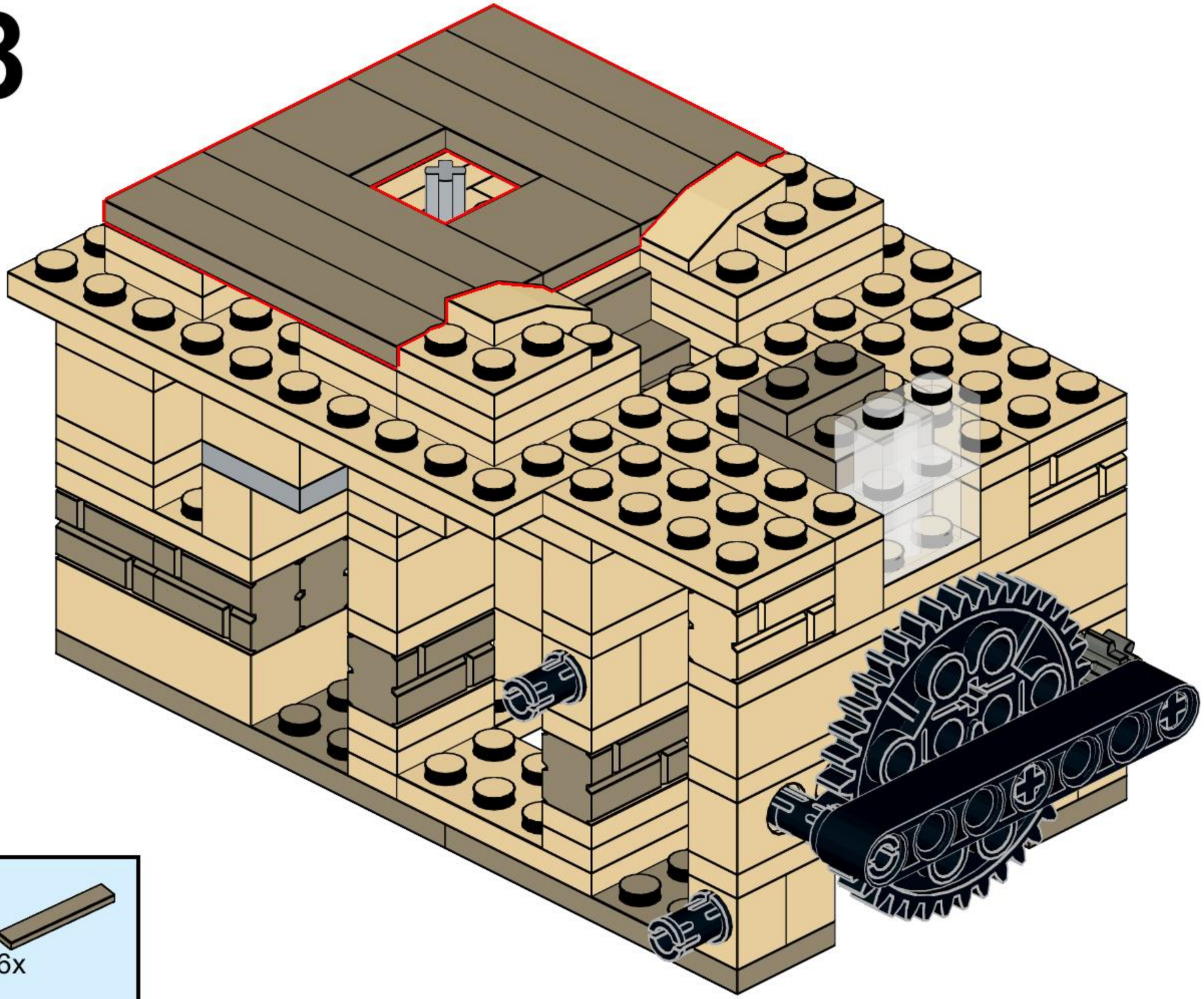

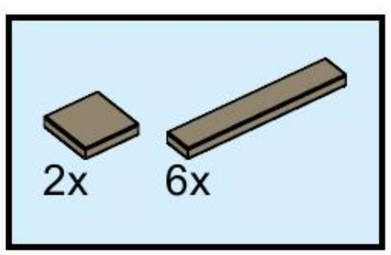

39

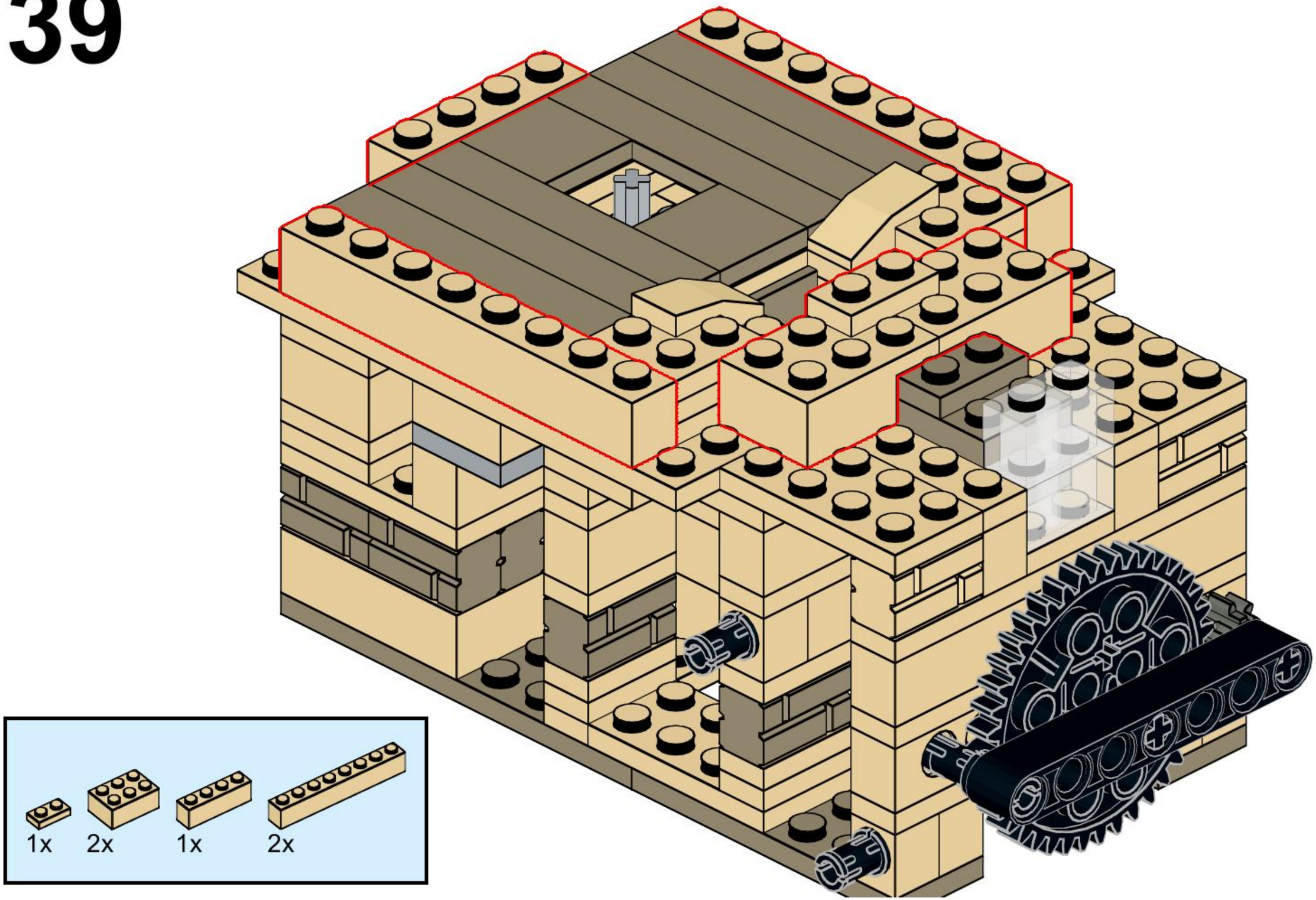

40

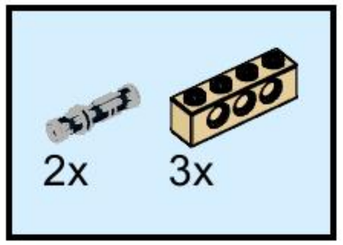

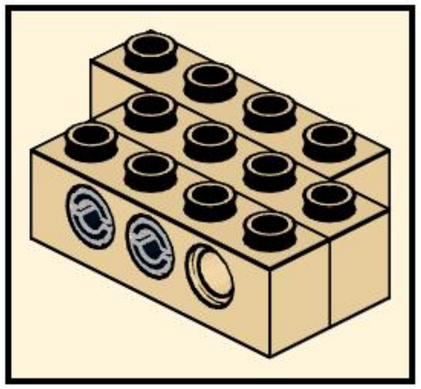

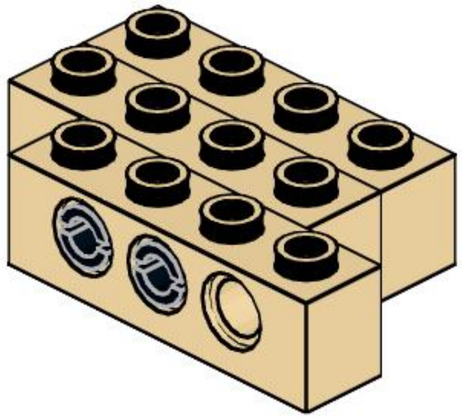

41

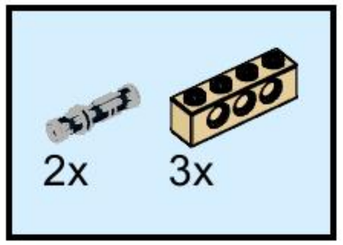

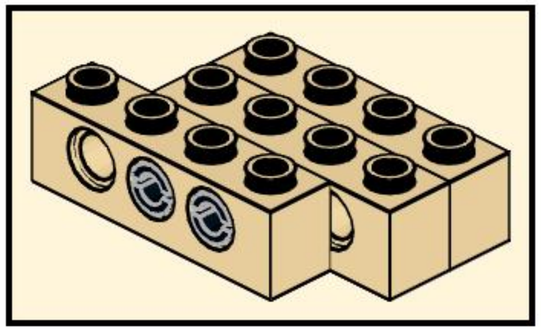

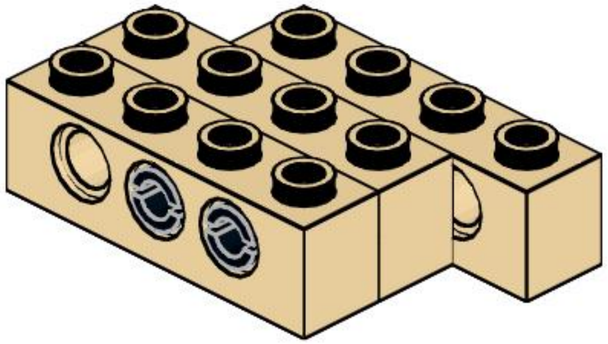

42

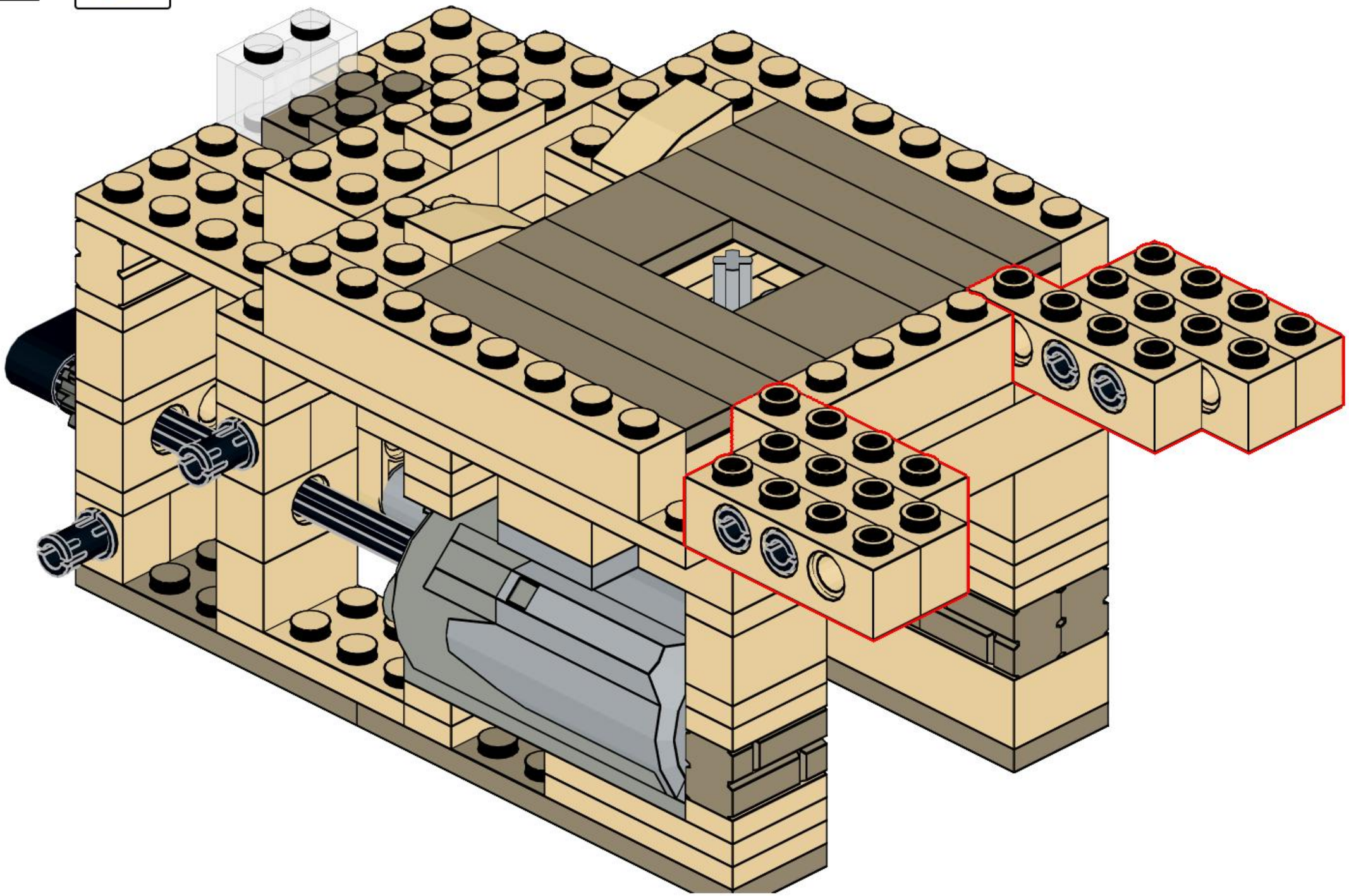

43

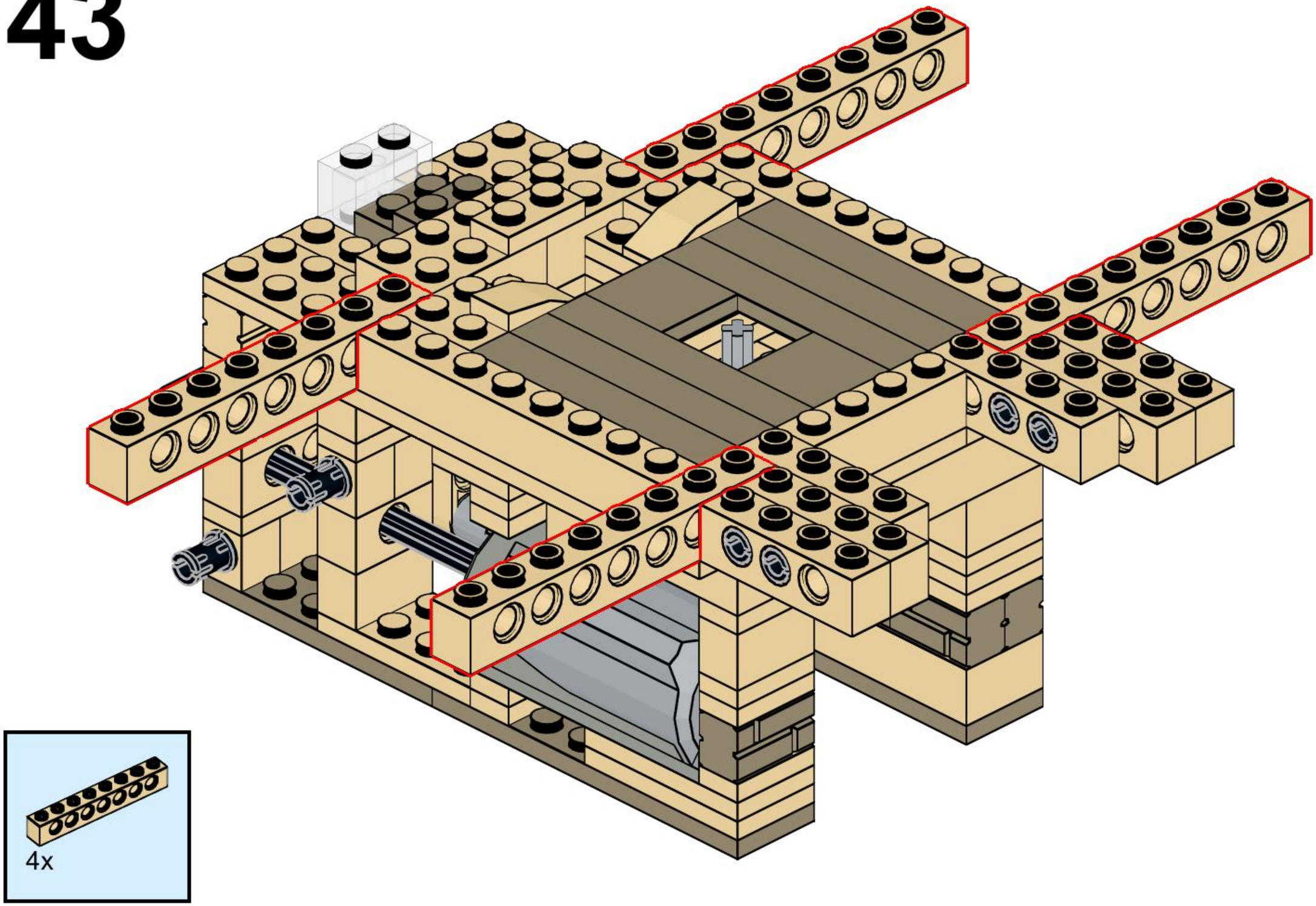

44

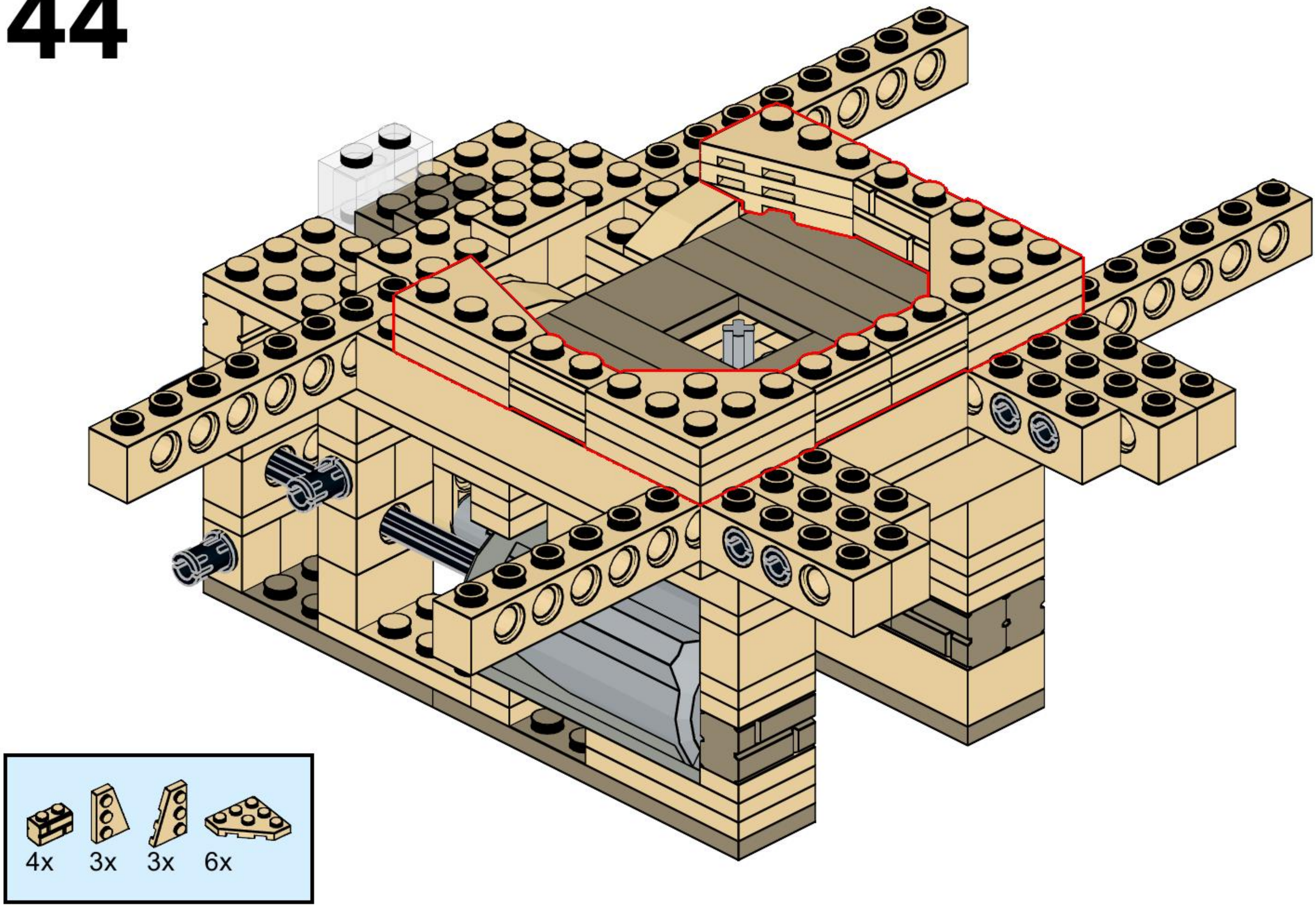

45

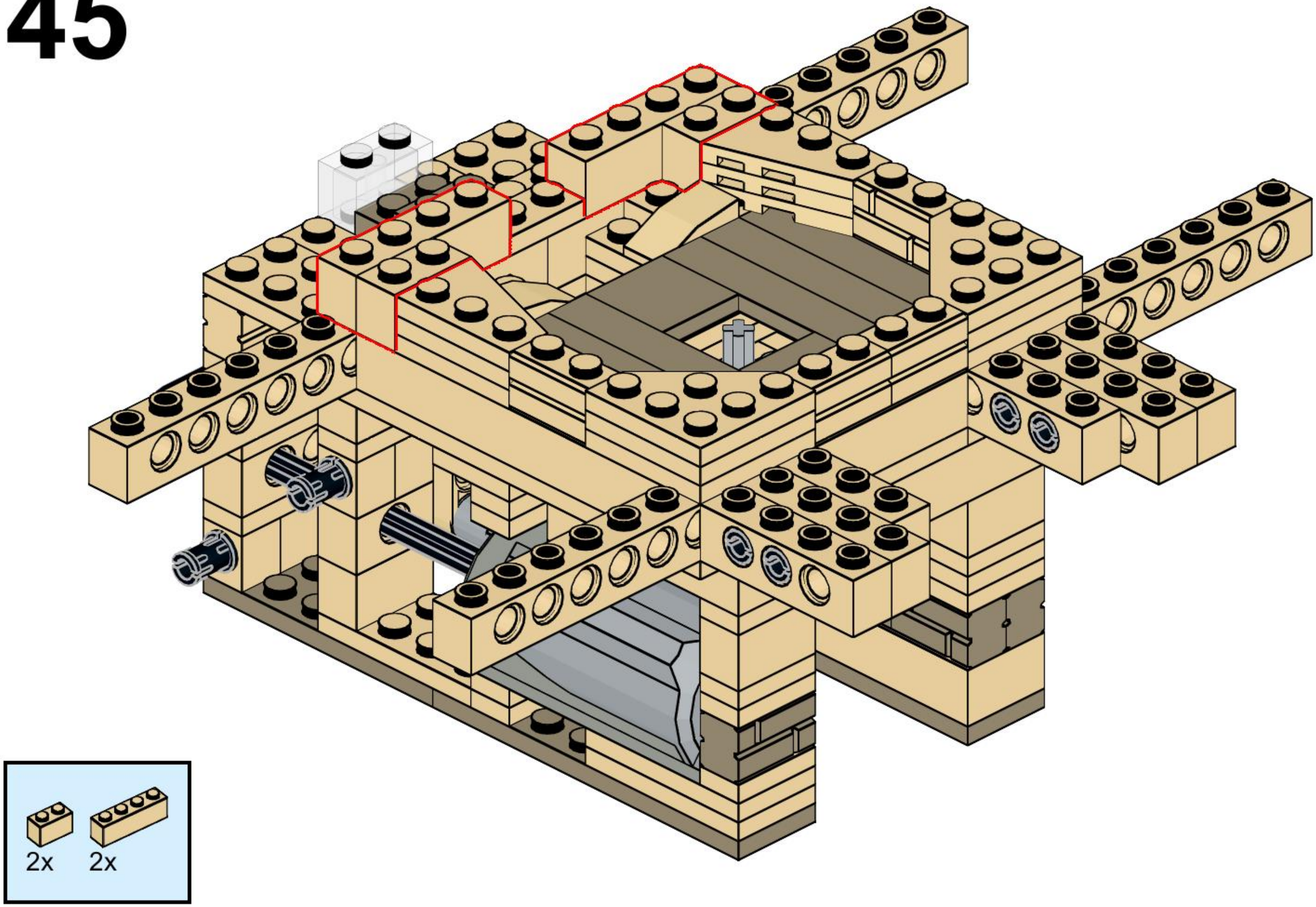

46

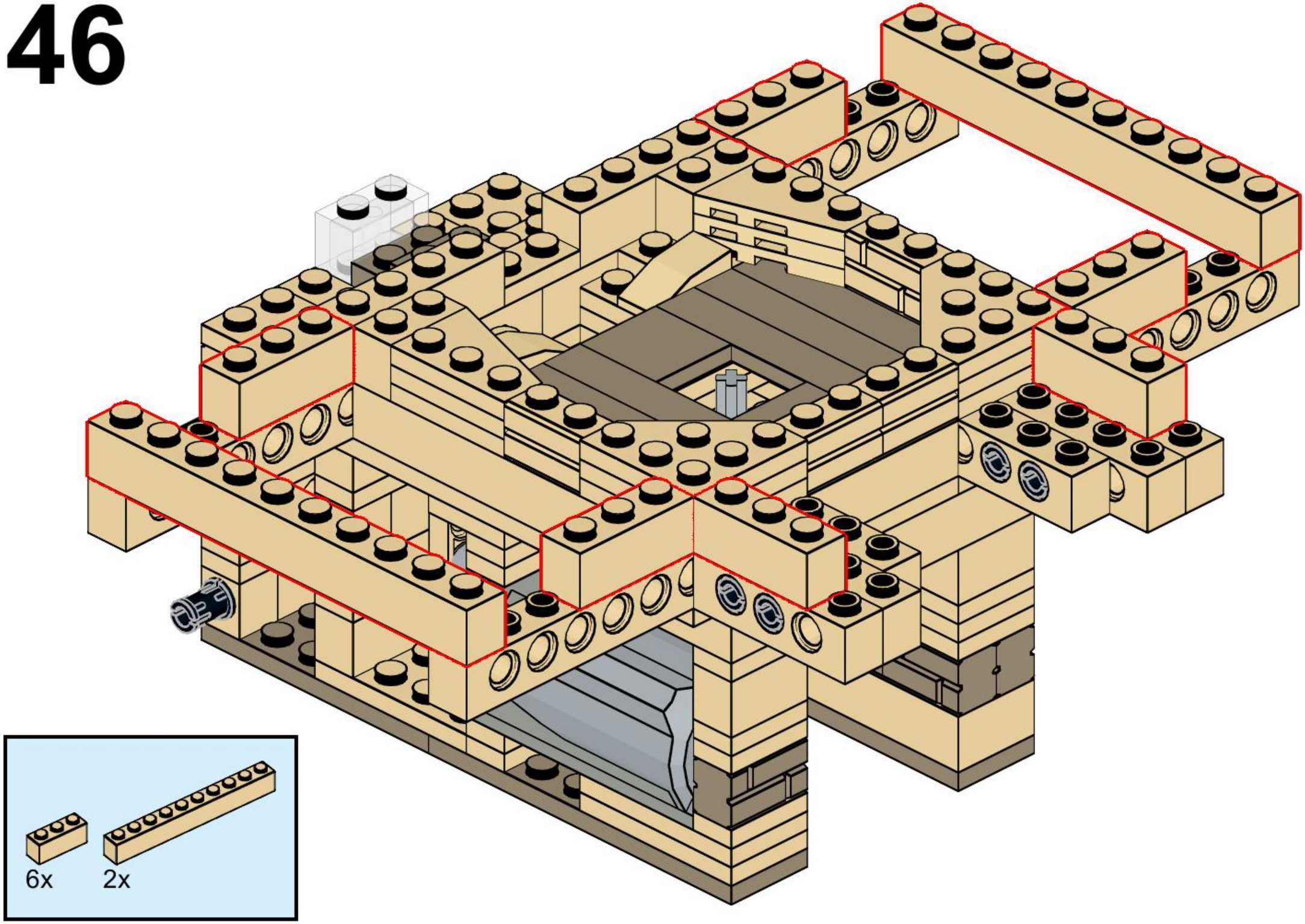

47

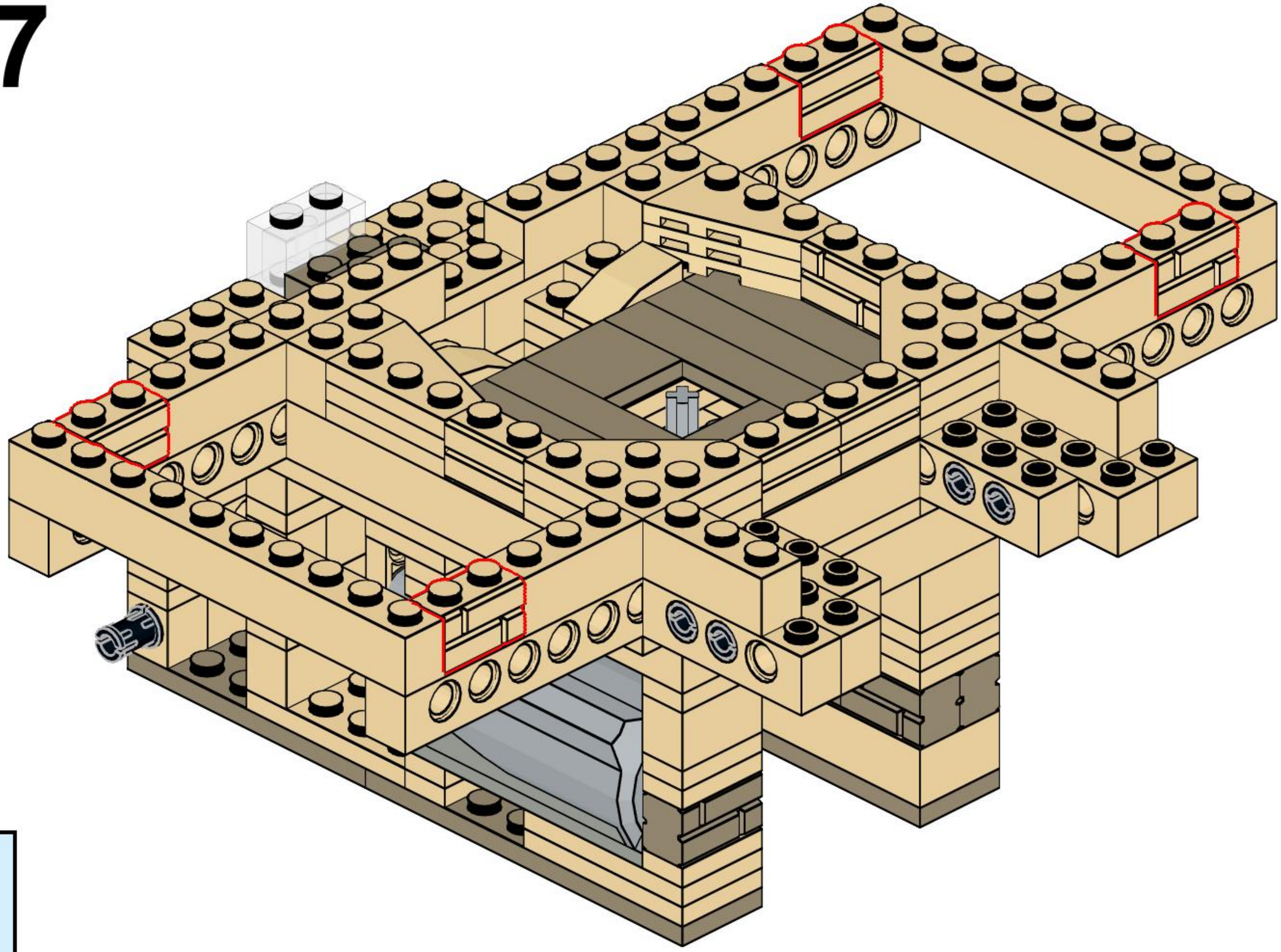

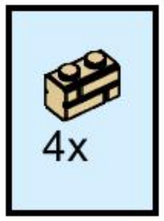

48

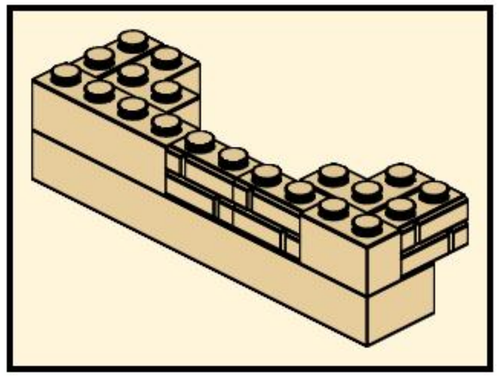

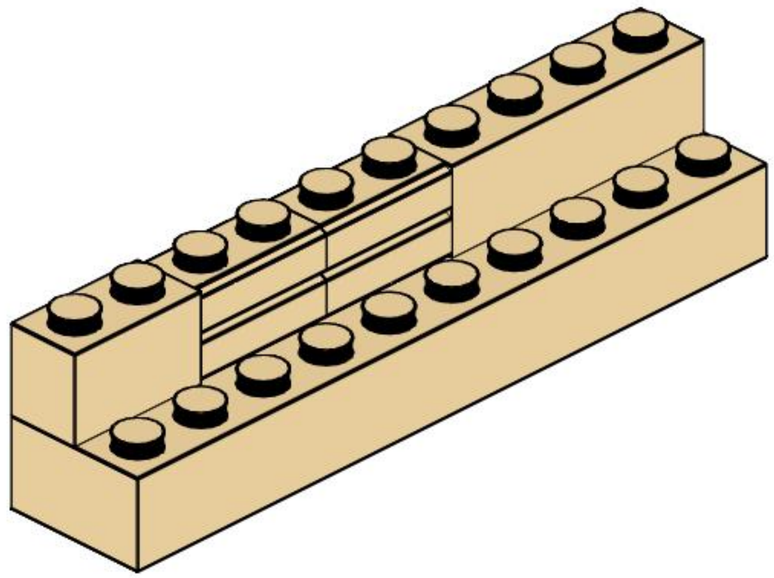

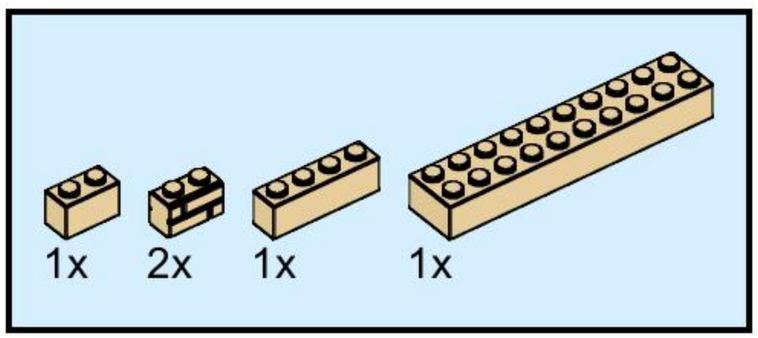

49

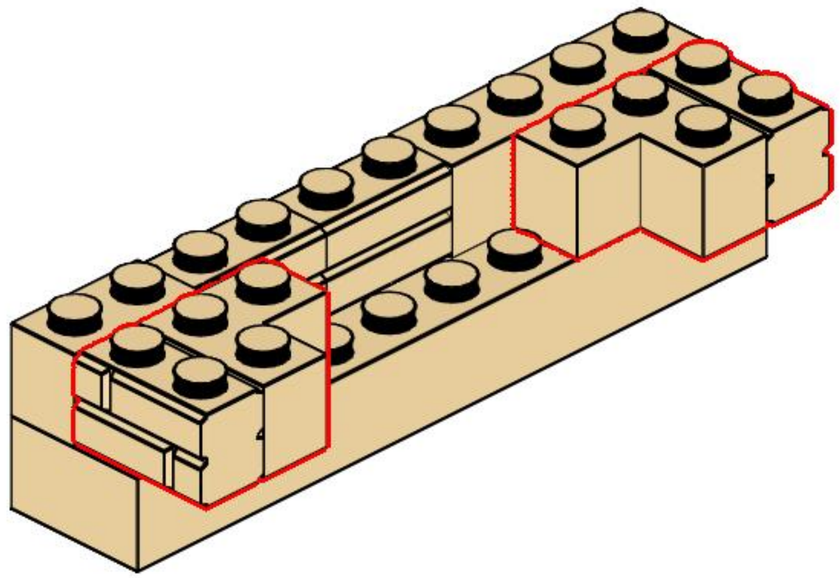

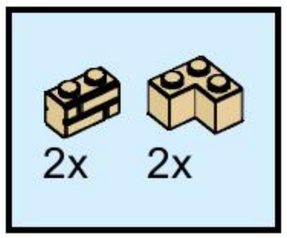

50

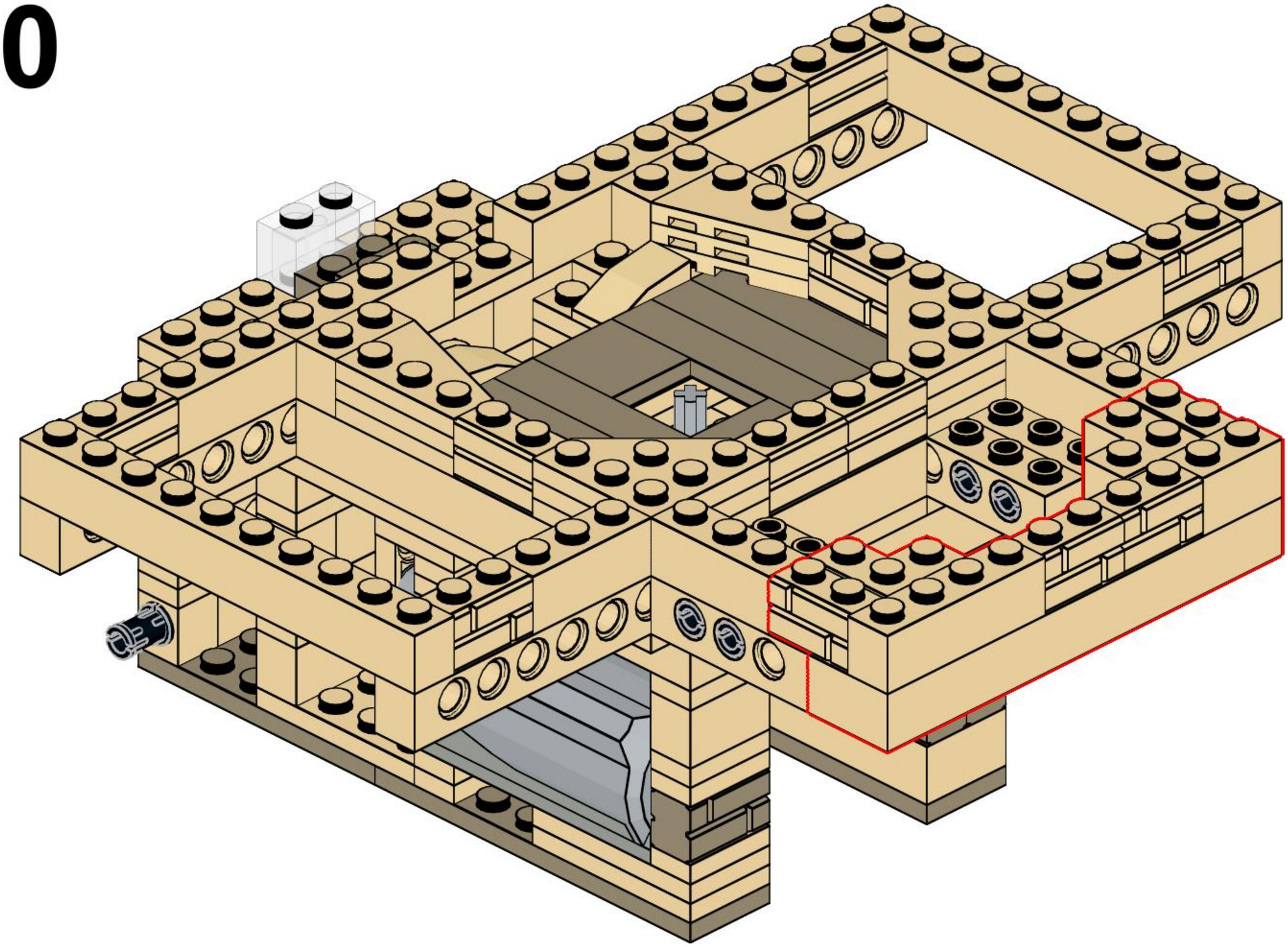

51

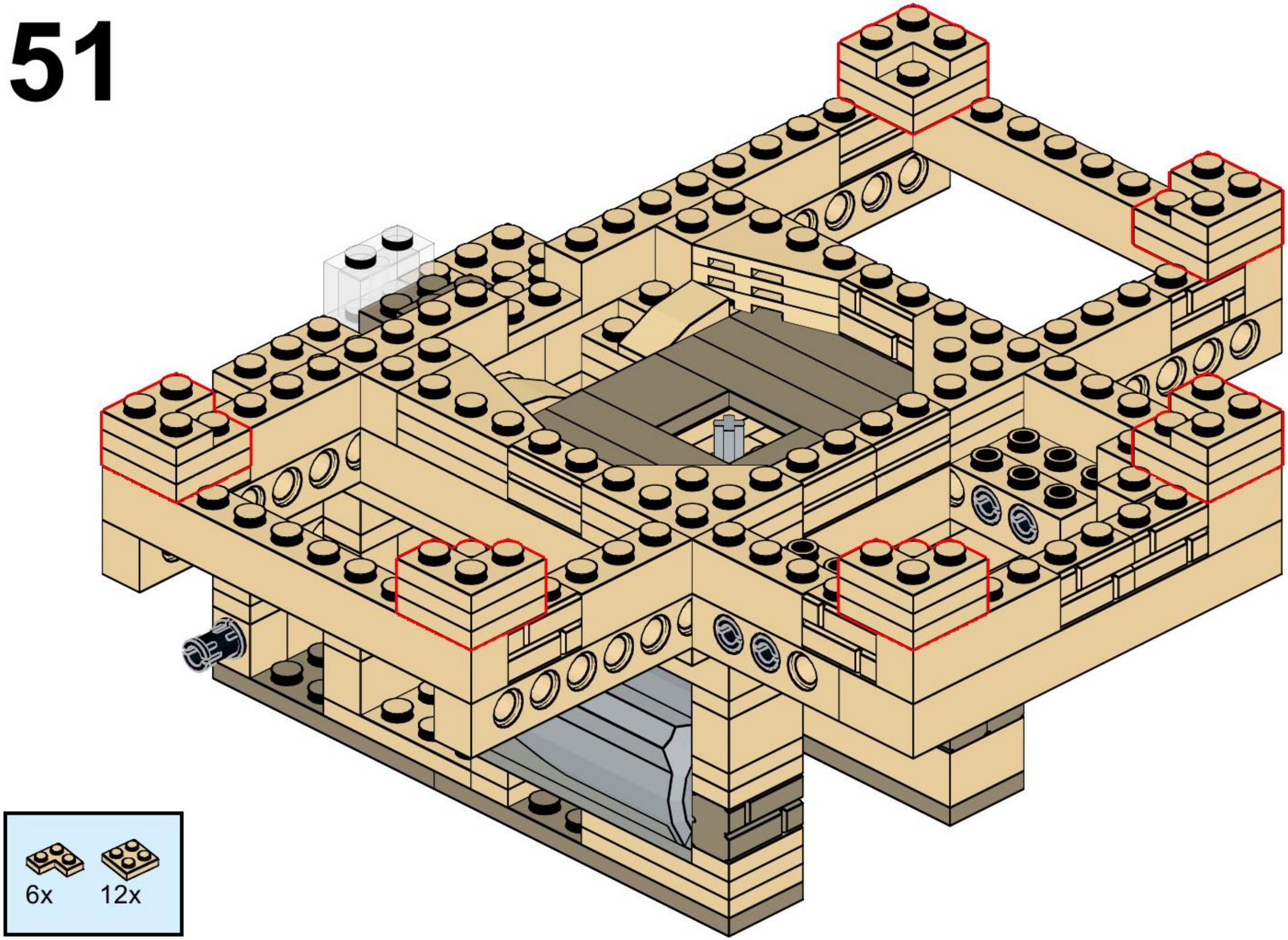

52

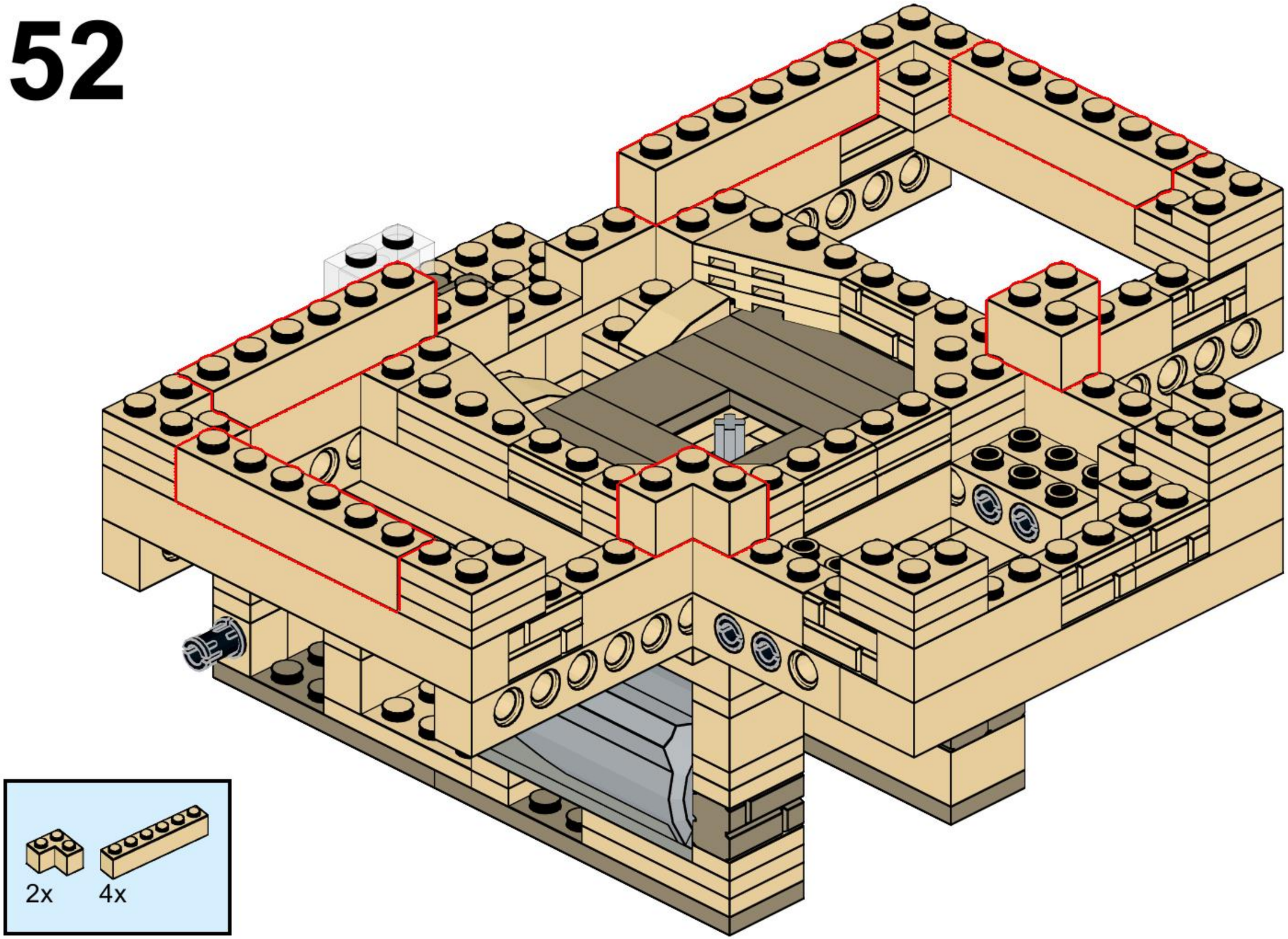

53

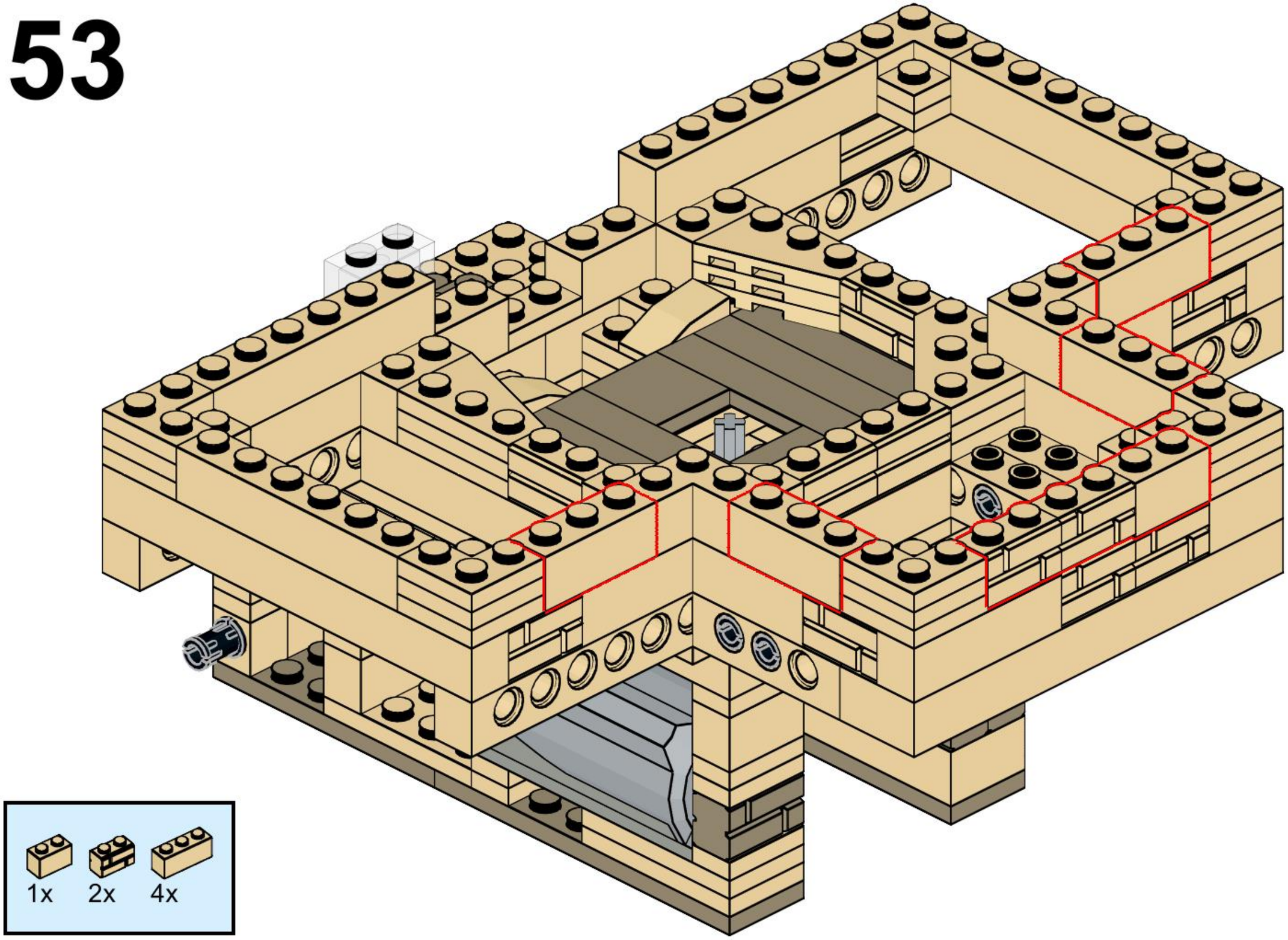

54

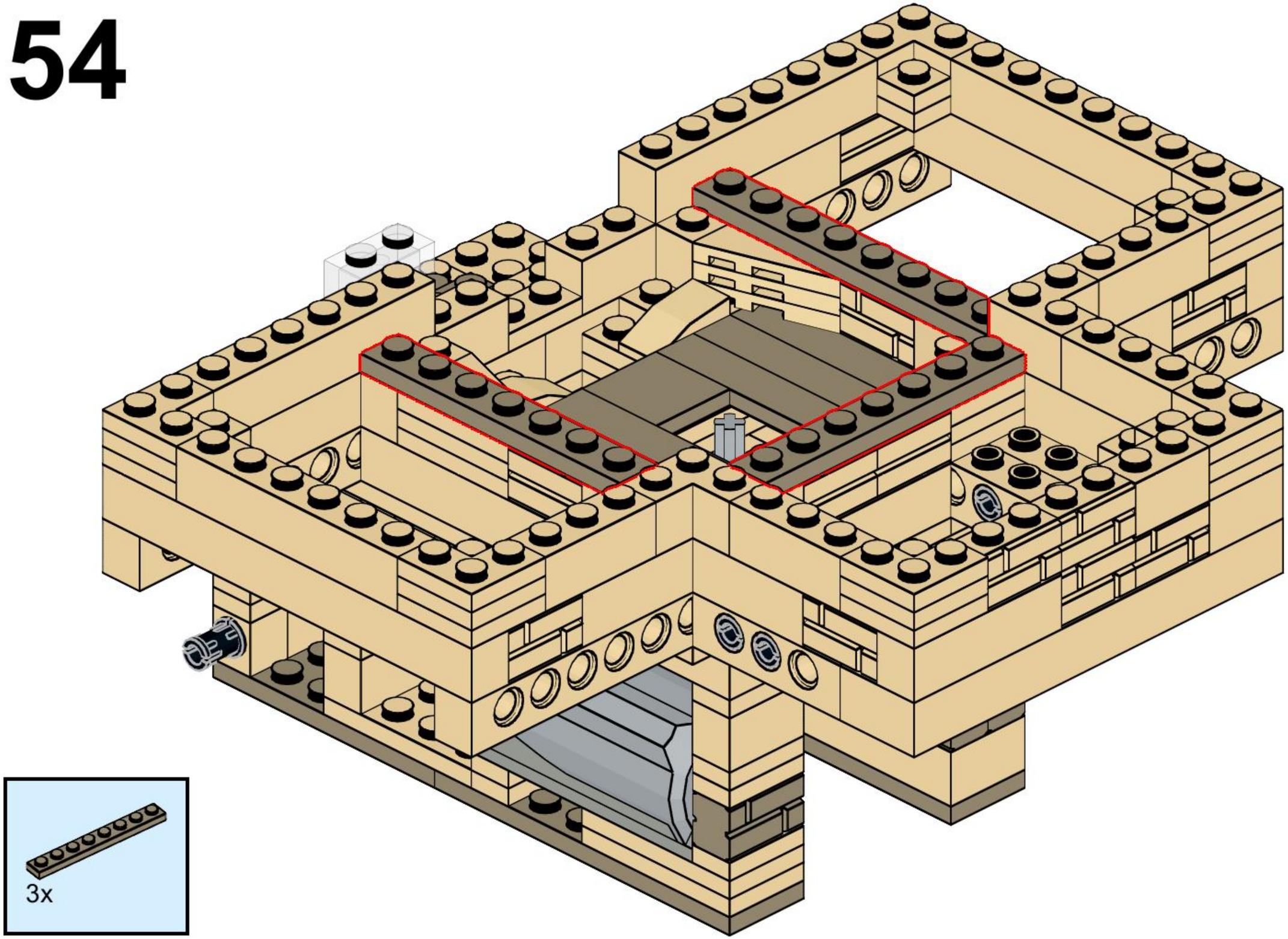

55

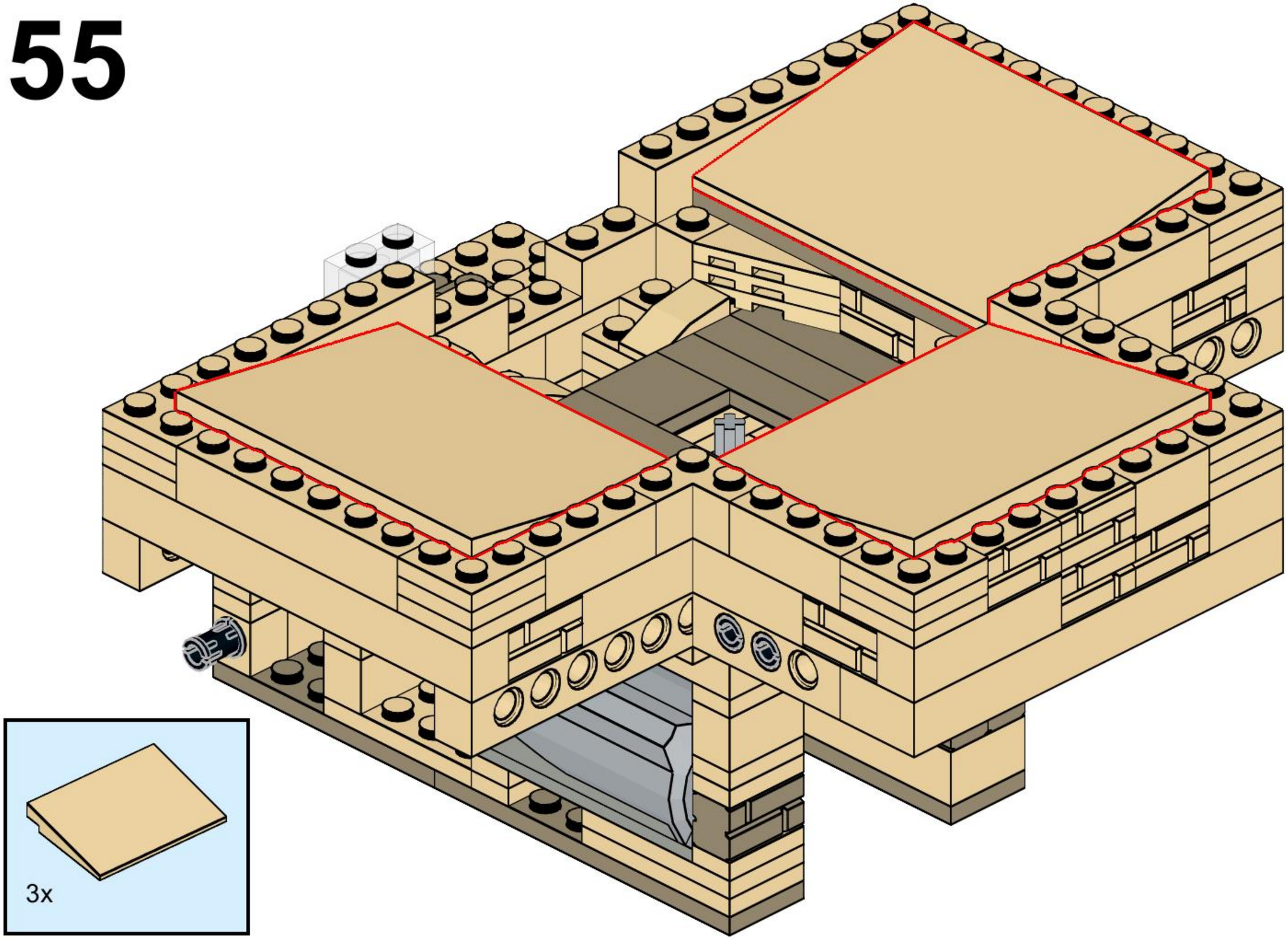

56

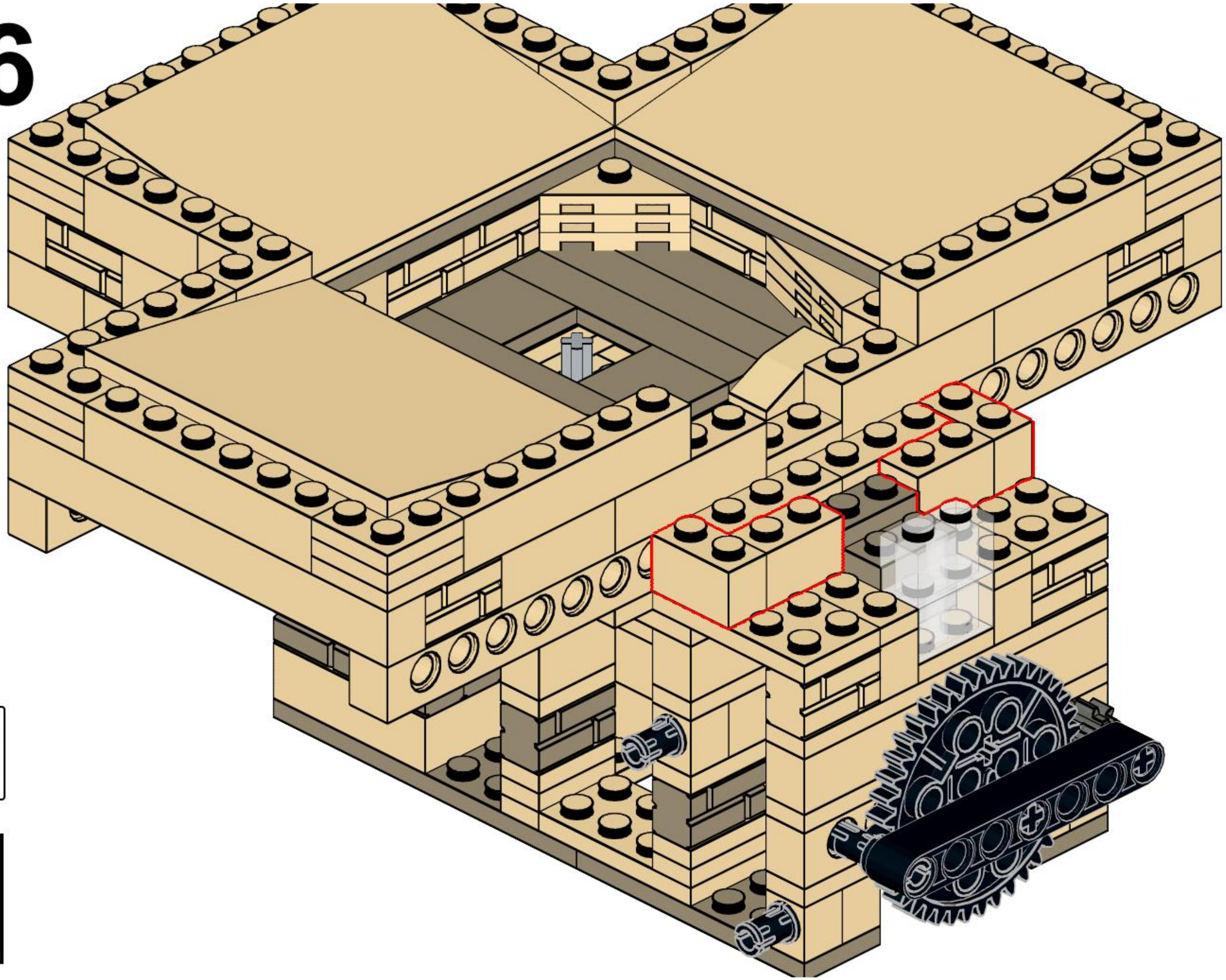

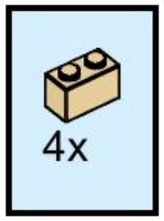

57

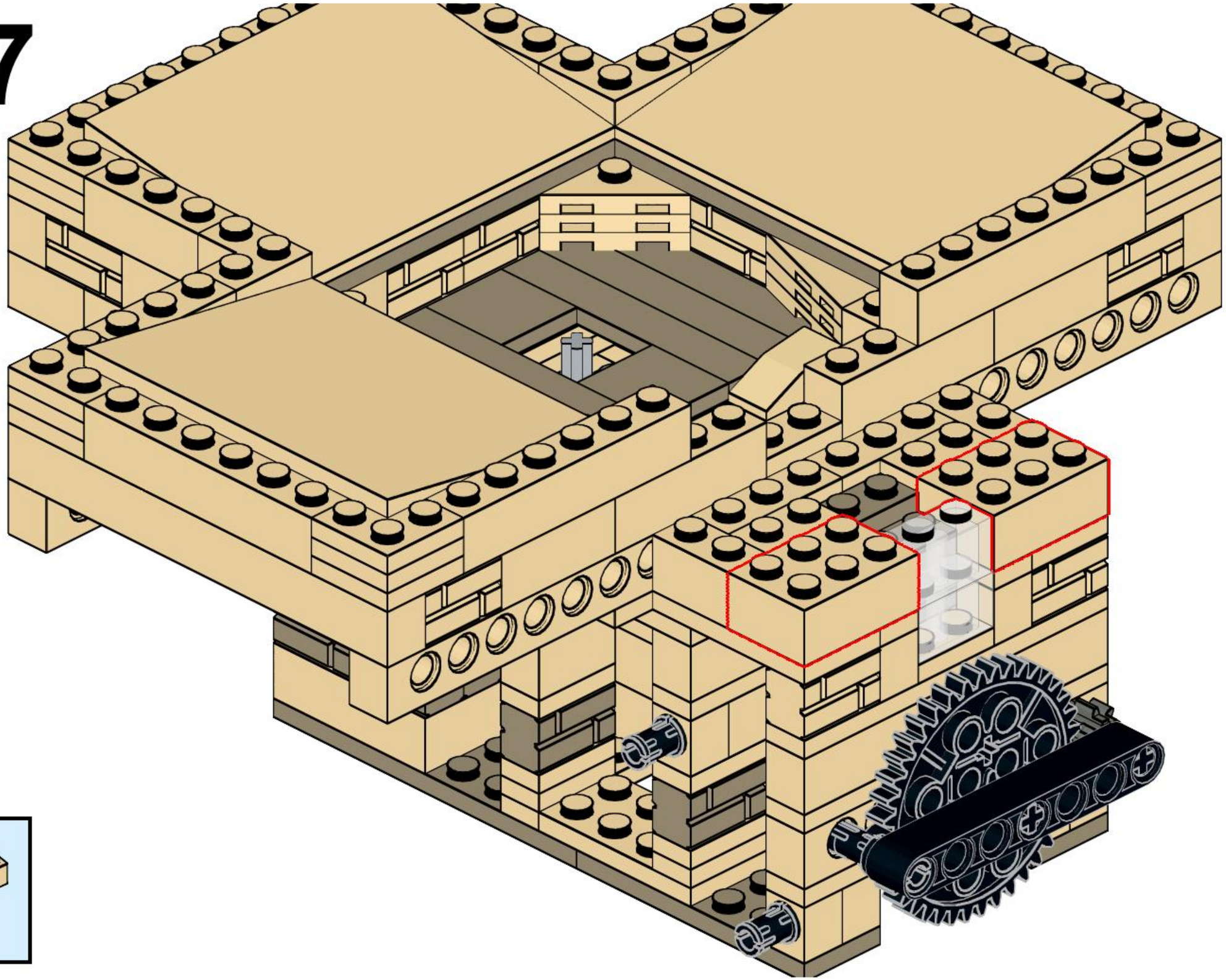

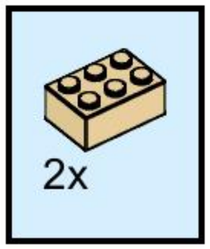

58

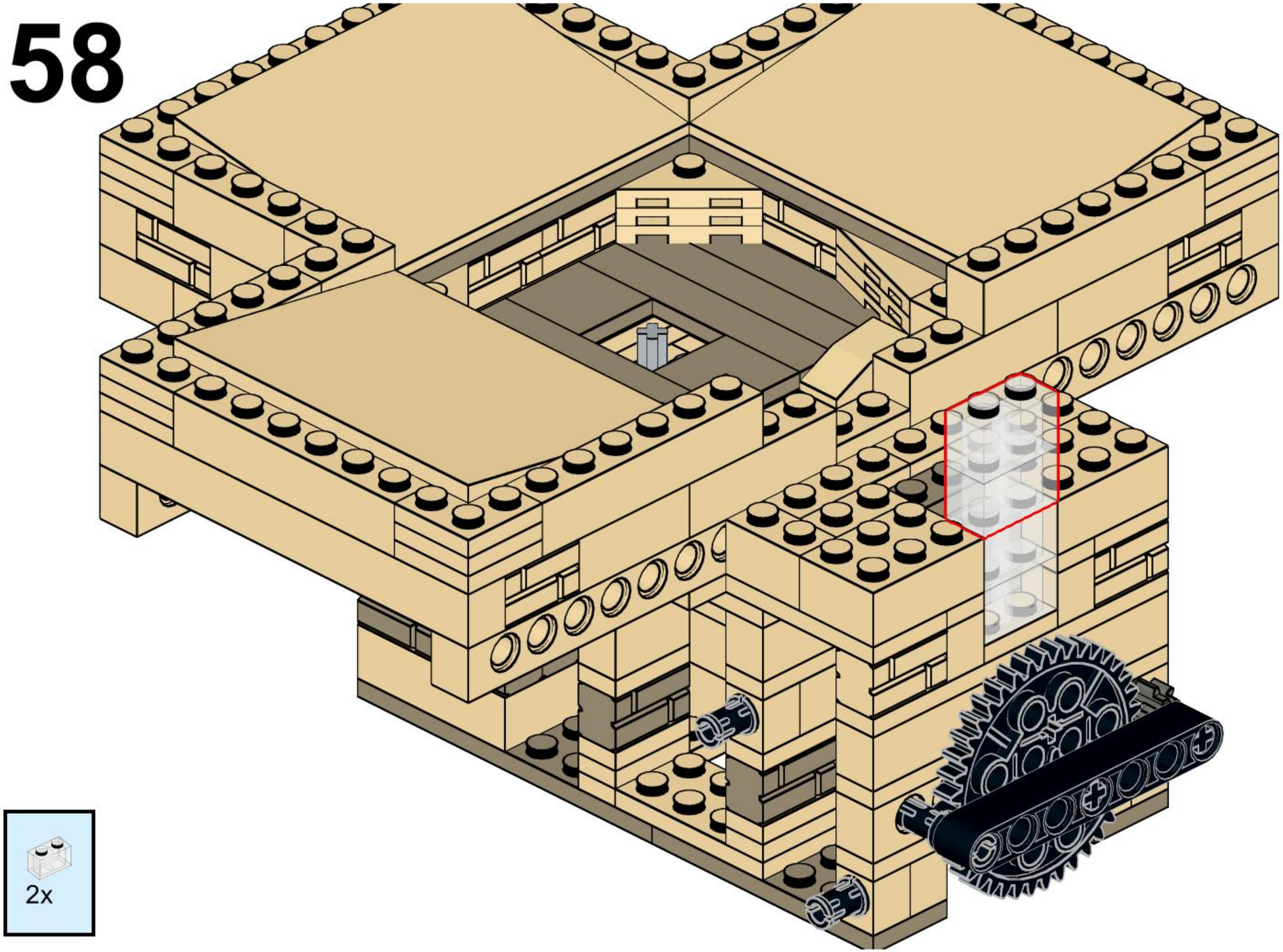

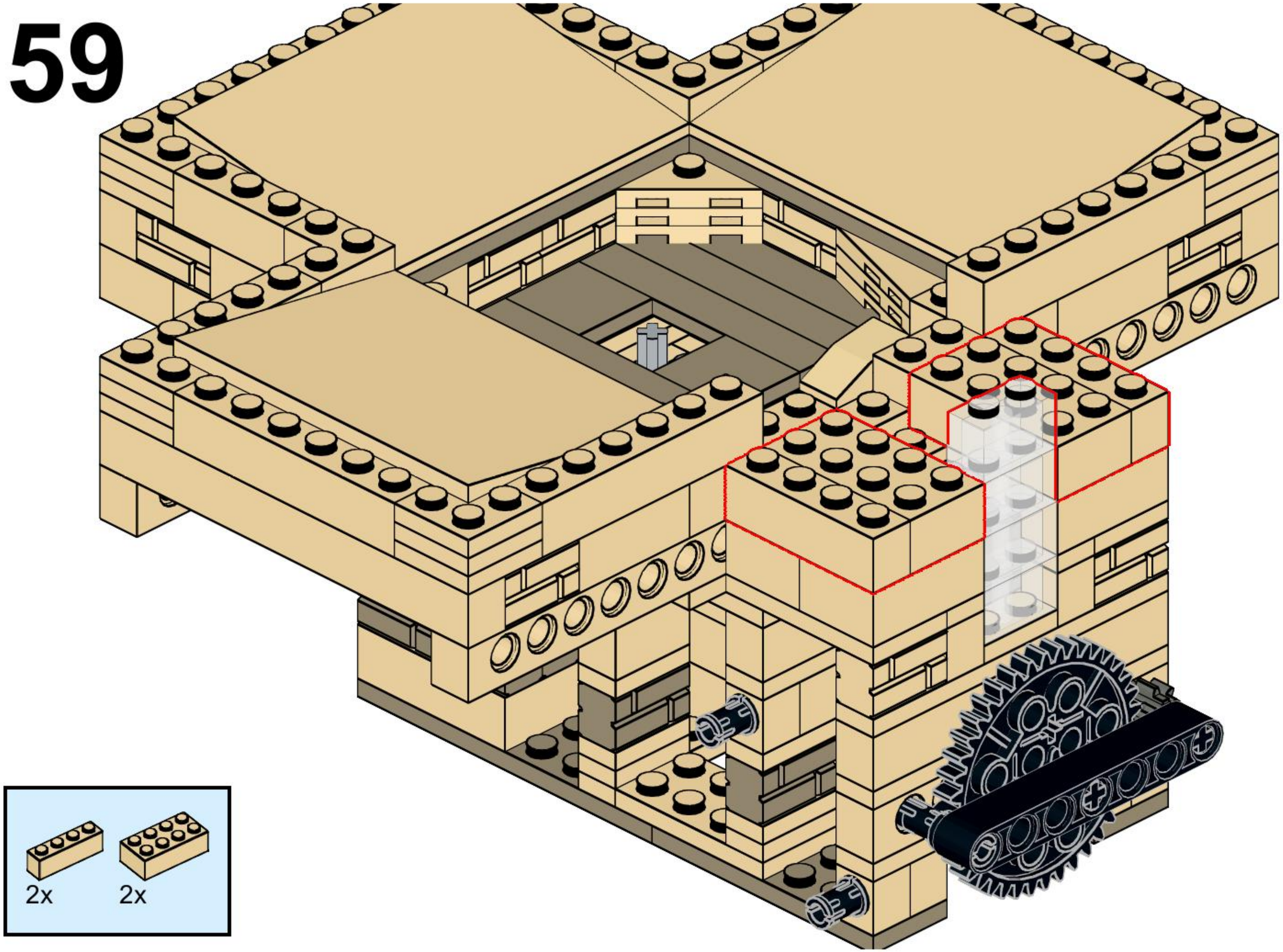
2x
2x

60

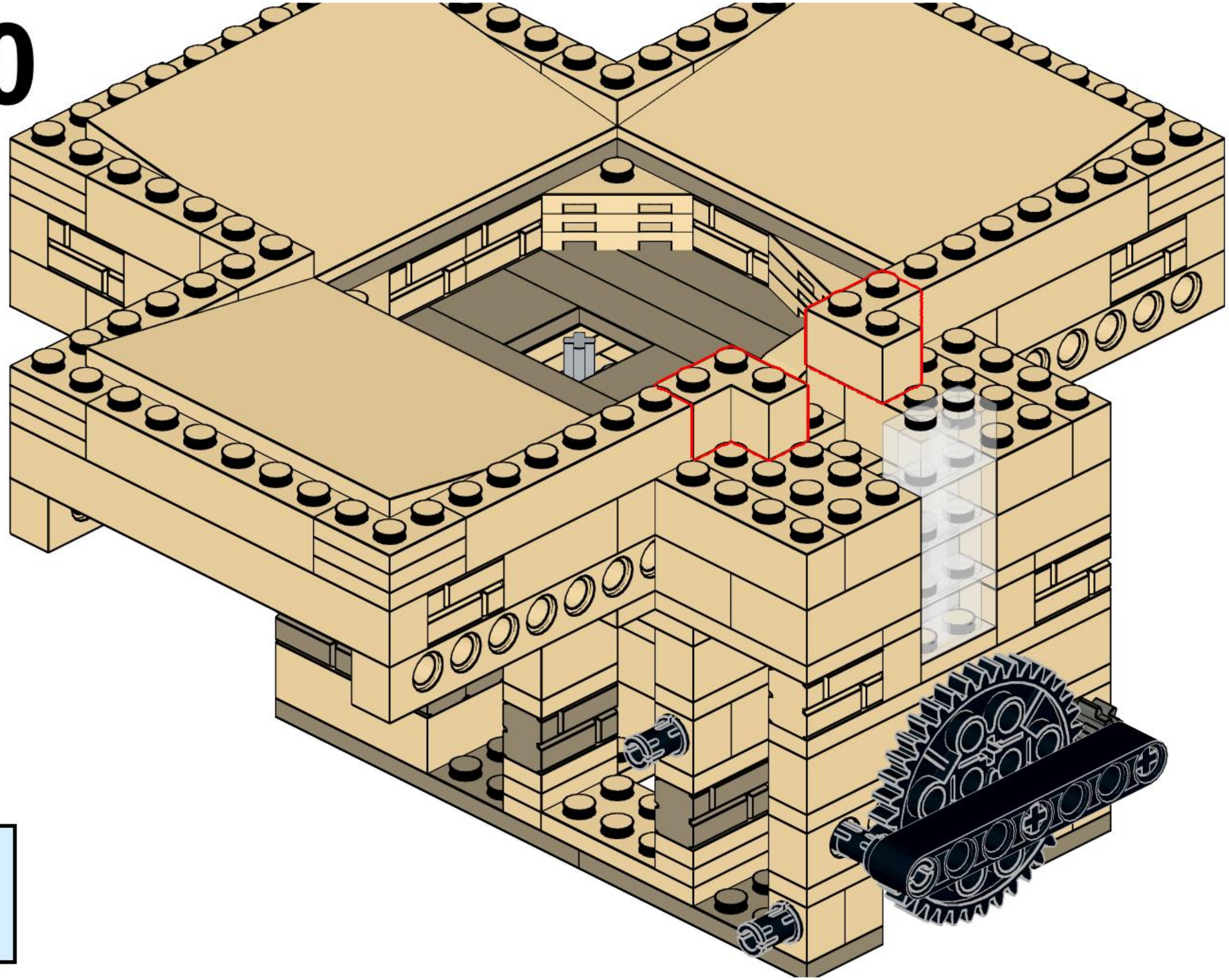

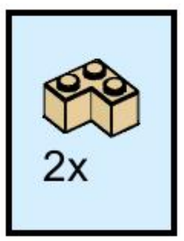

61

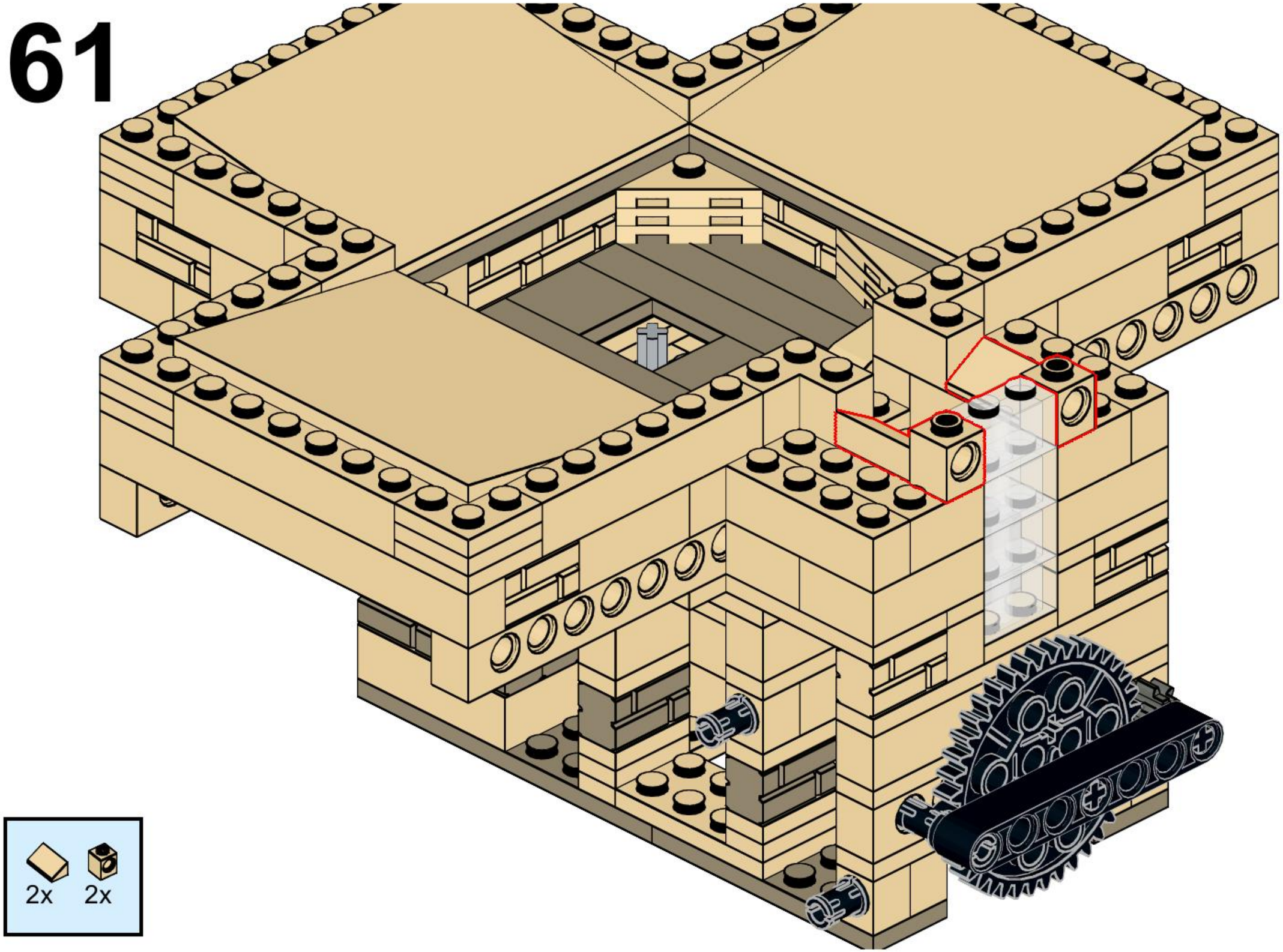

62

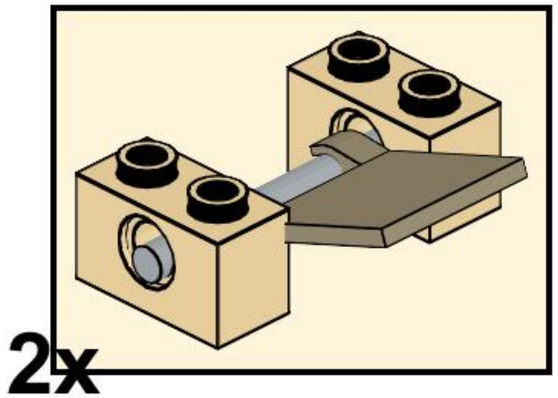

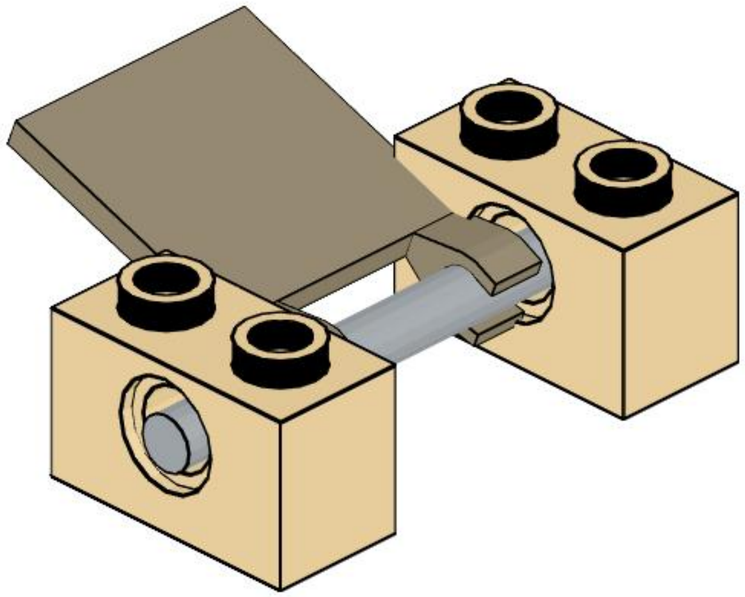

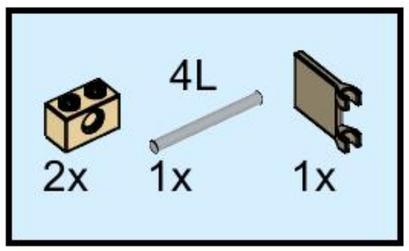

63

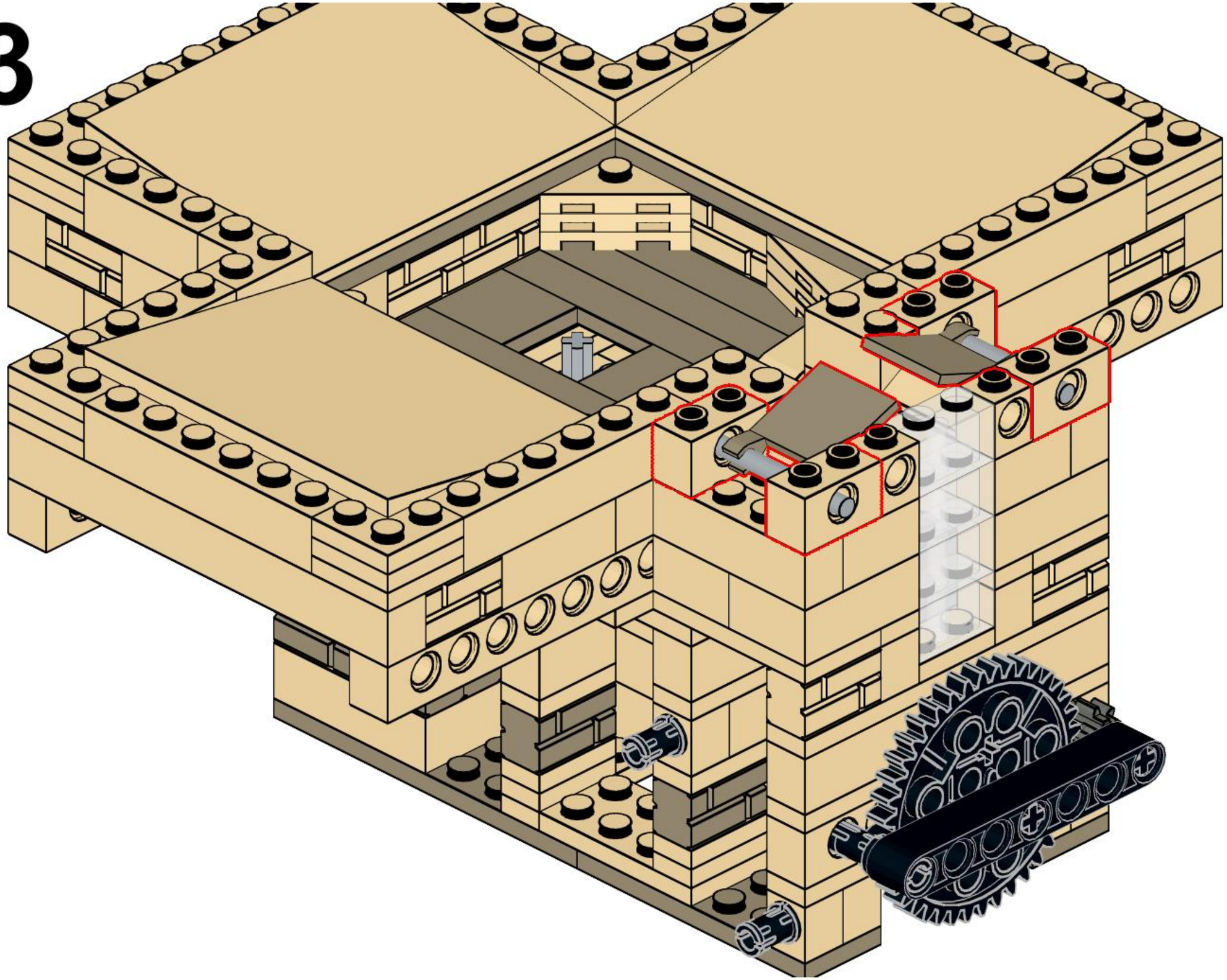

64

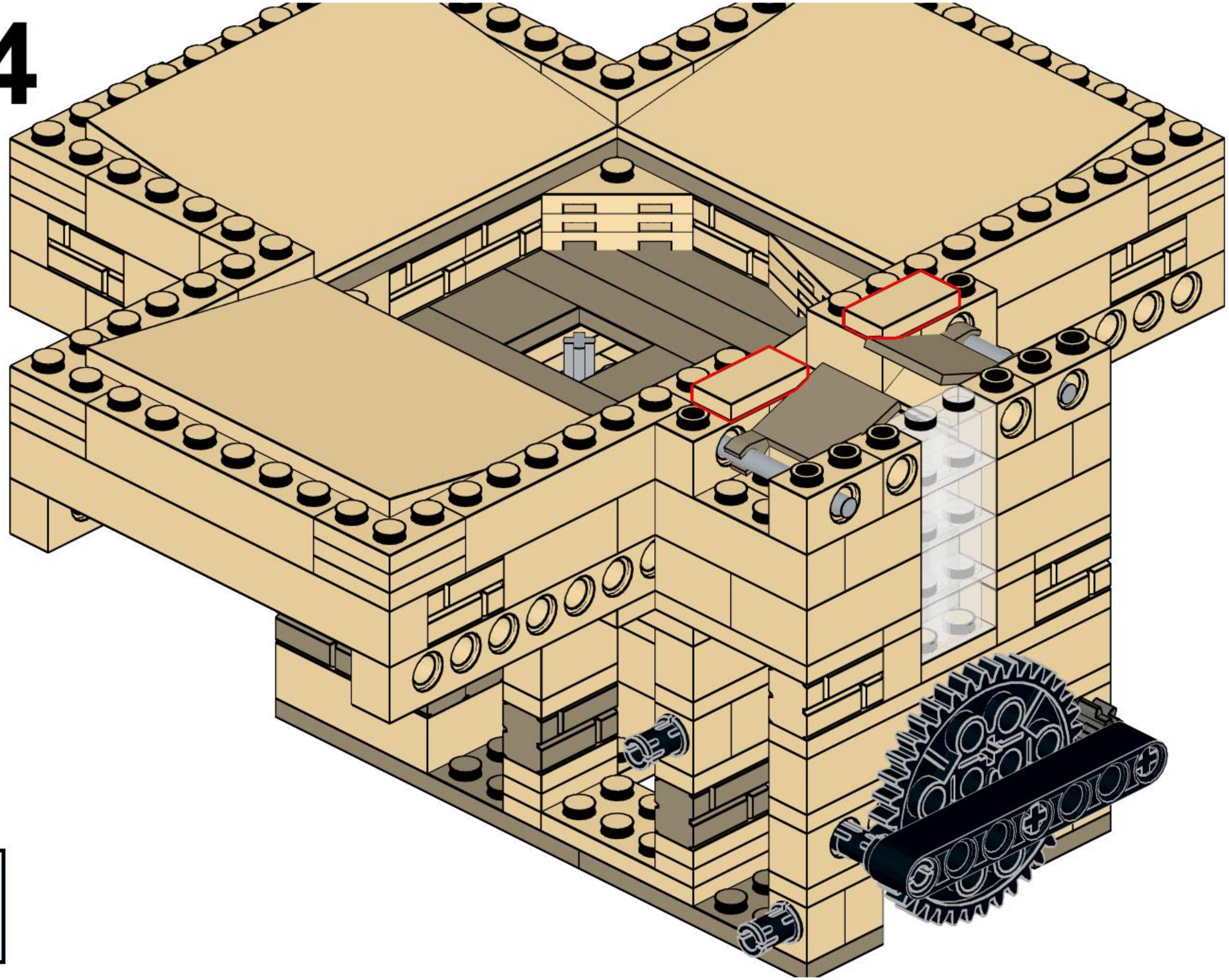

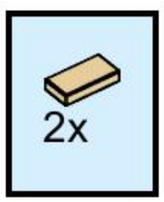

65

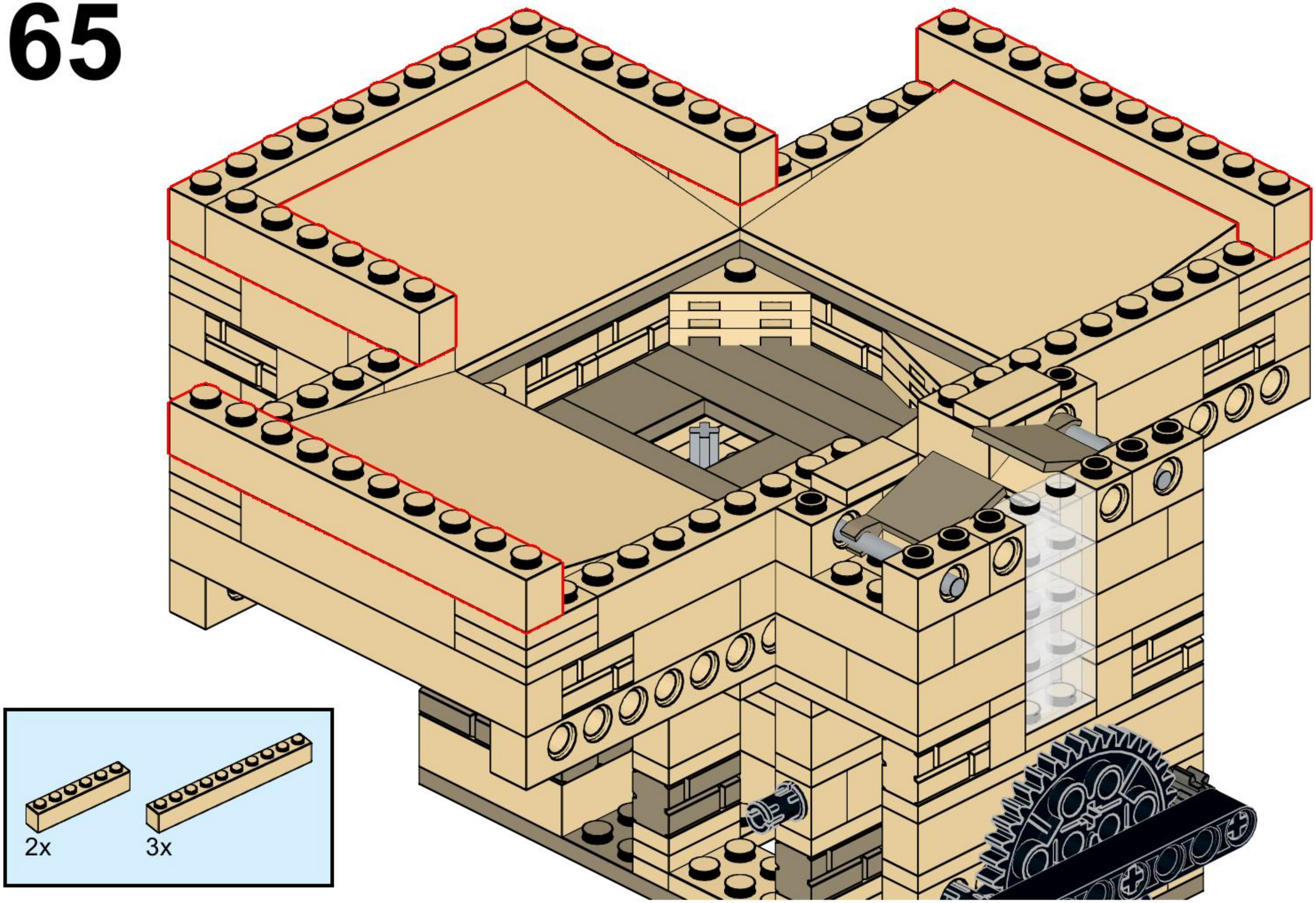

66

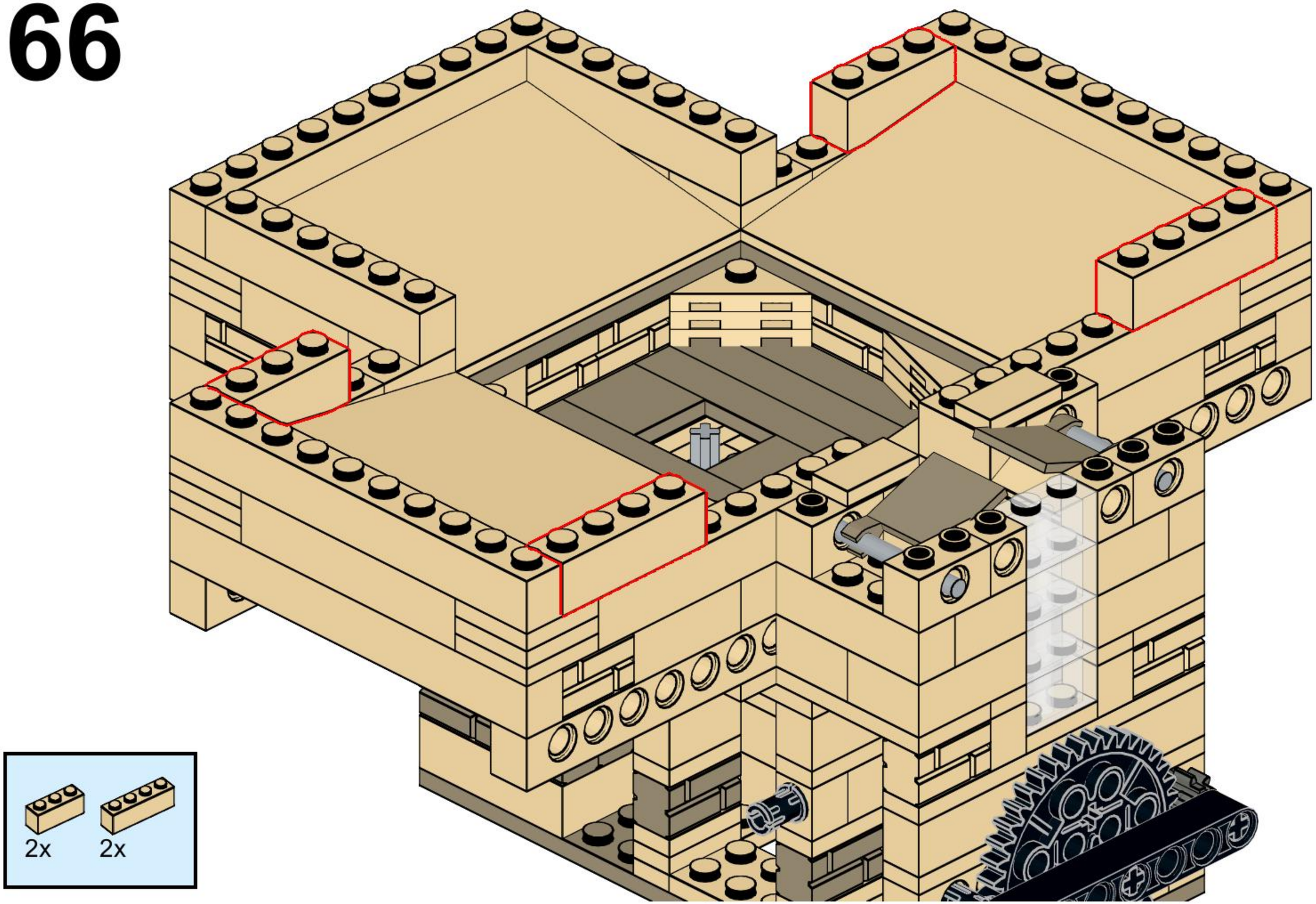

67

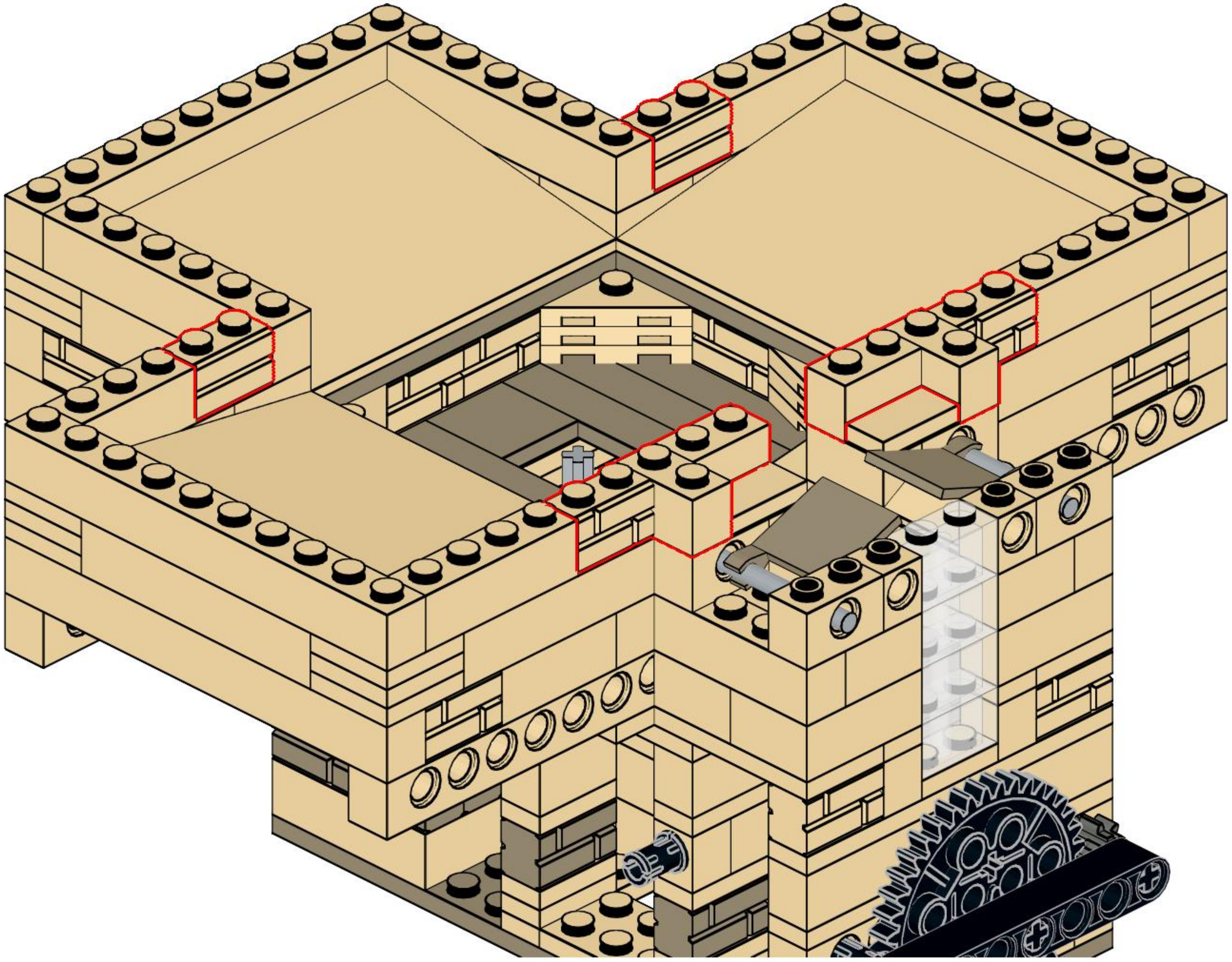

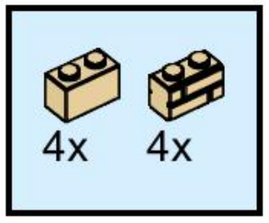

68

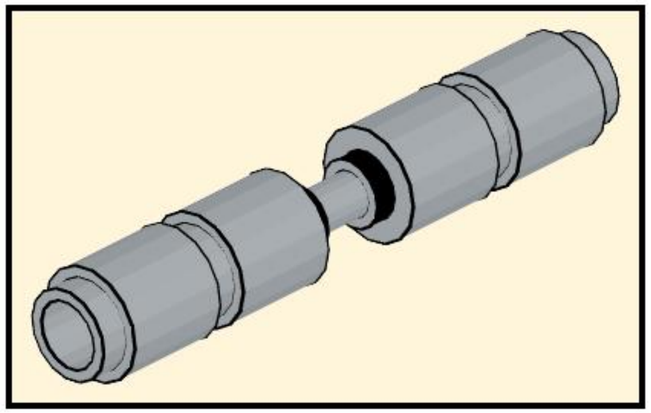

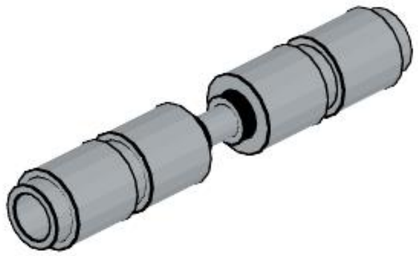

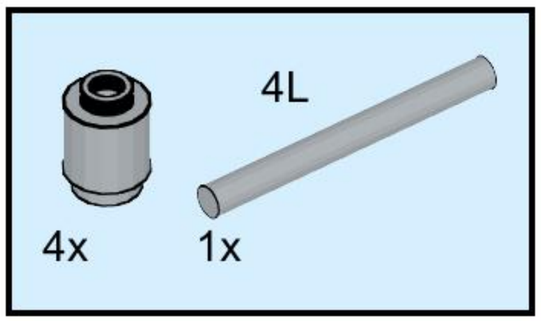

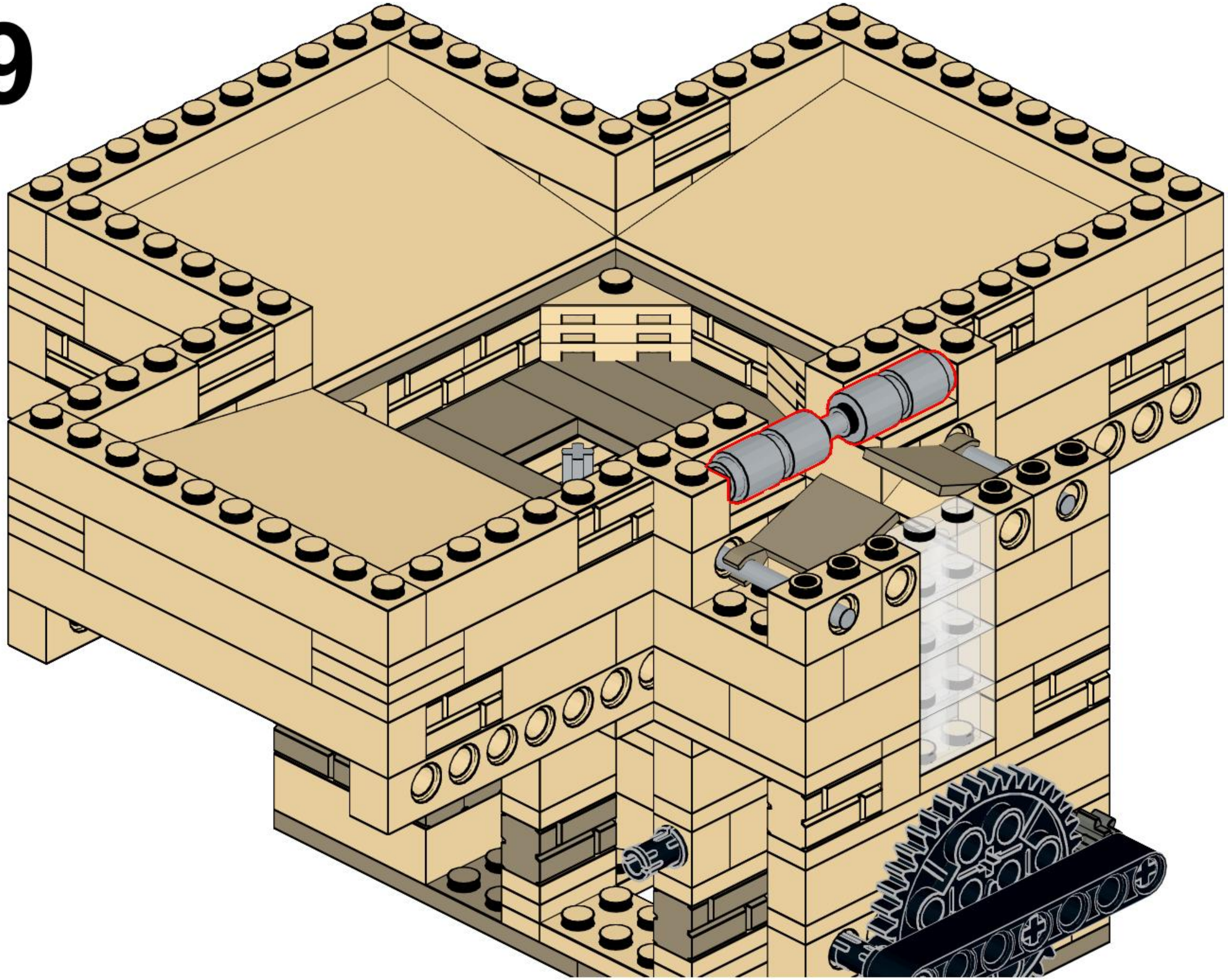

70

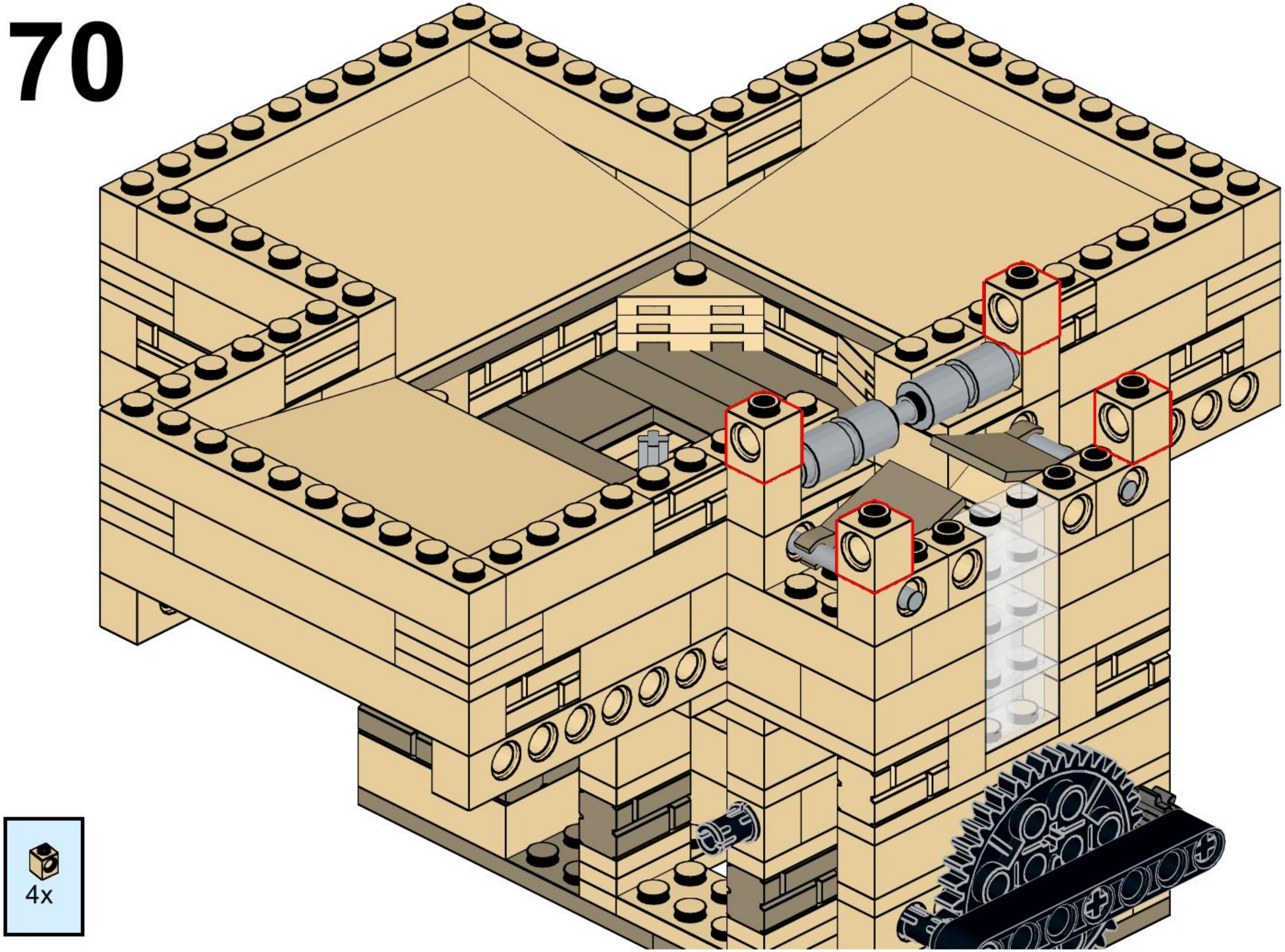

71

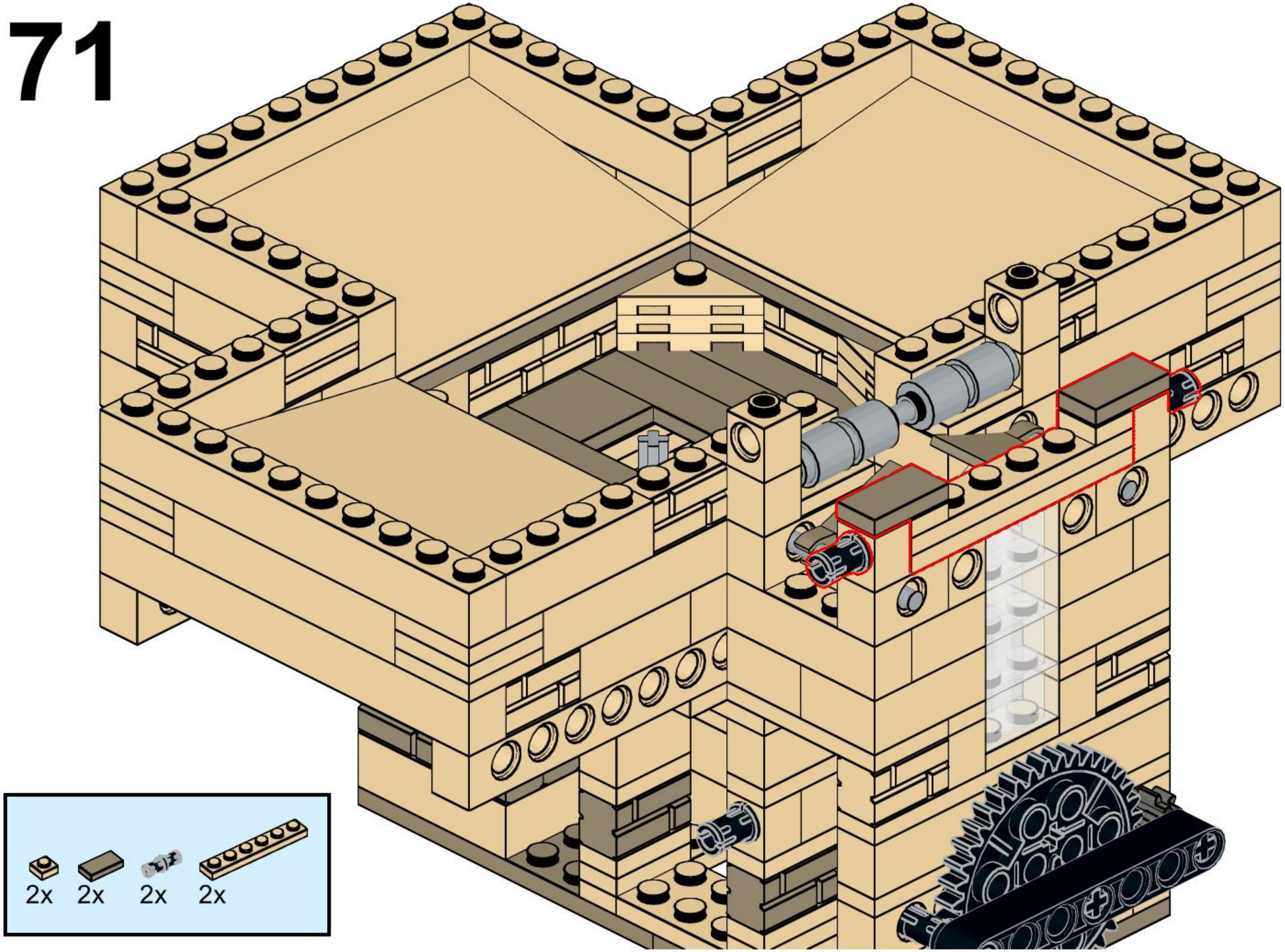

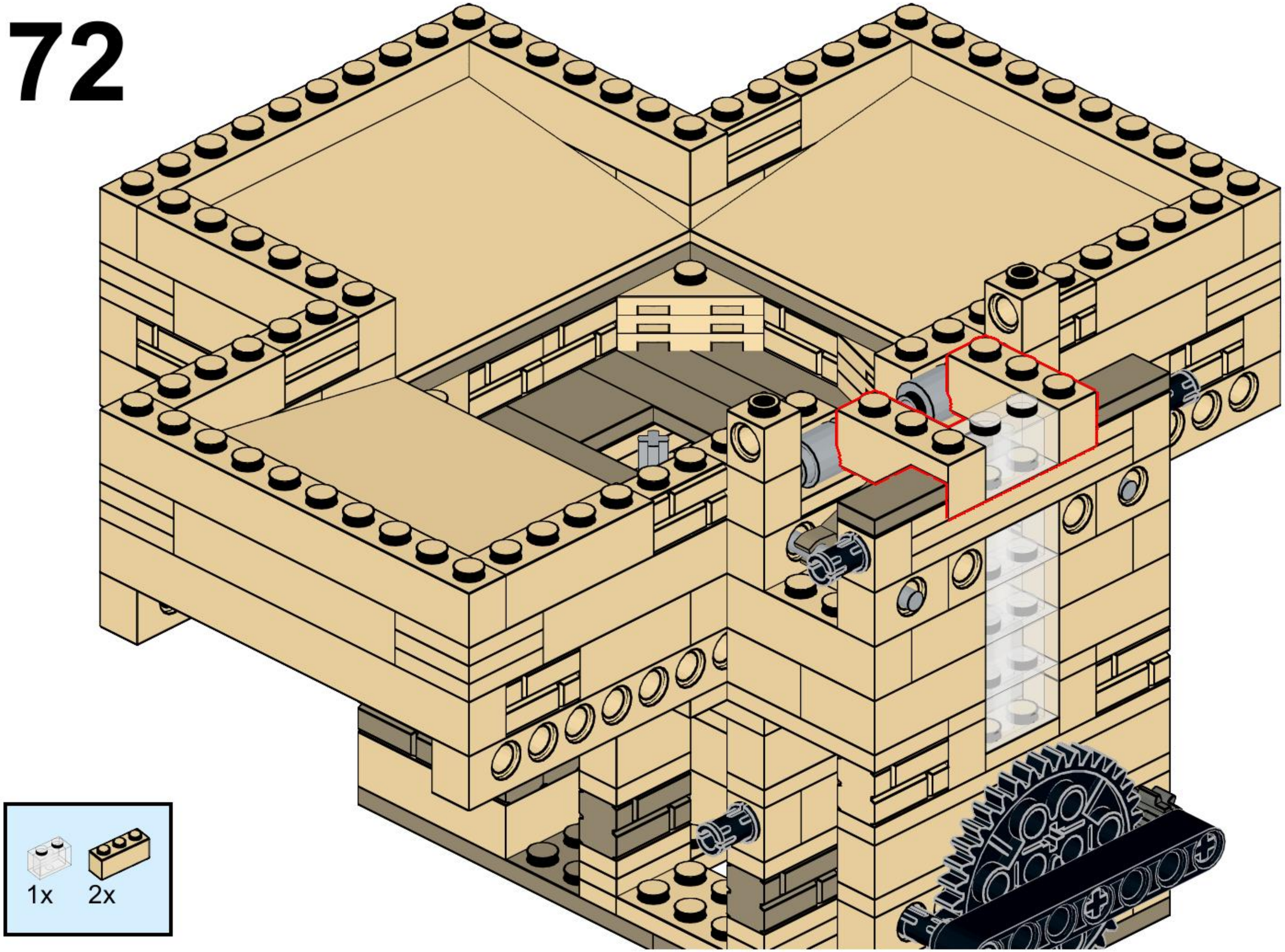
1x
2x

73

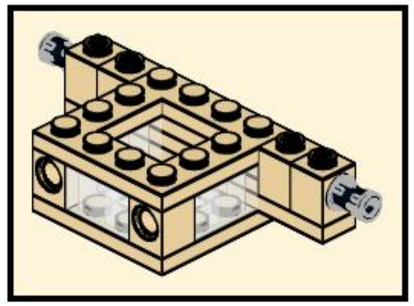

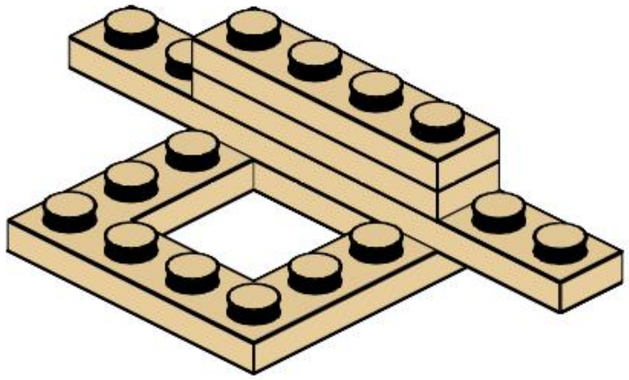

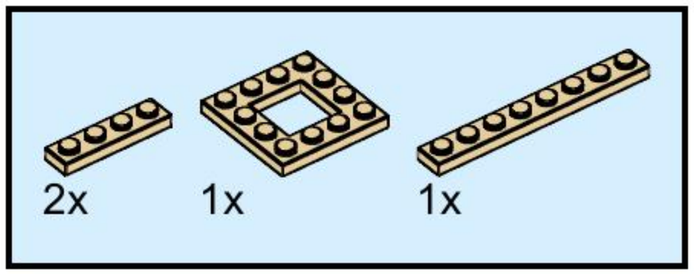

74

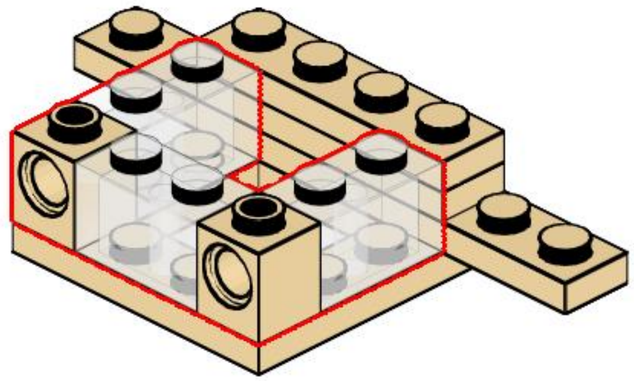

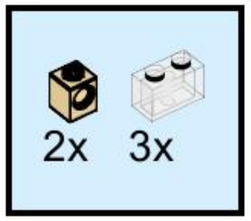

75

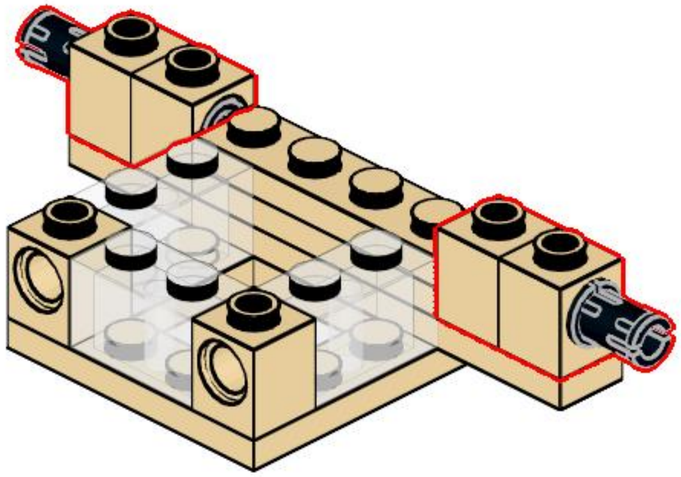

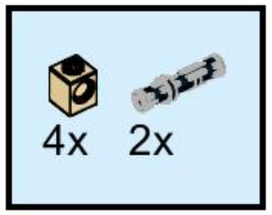

76

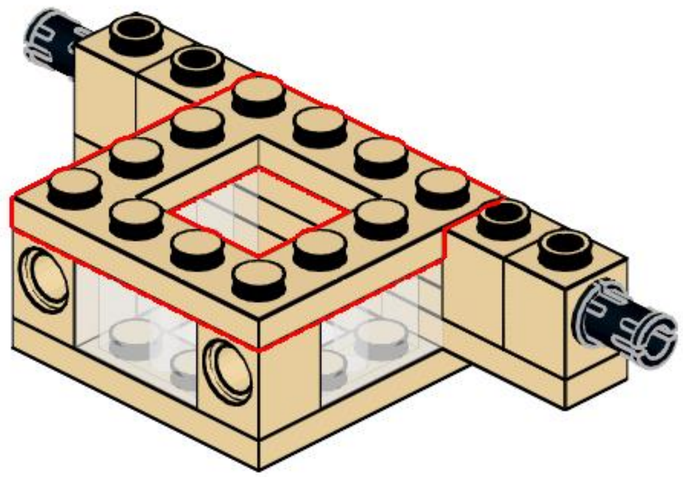

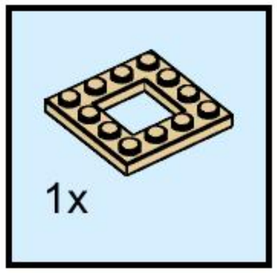

77

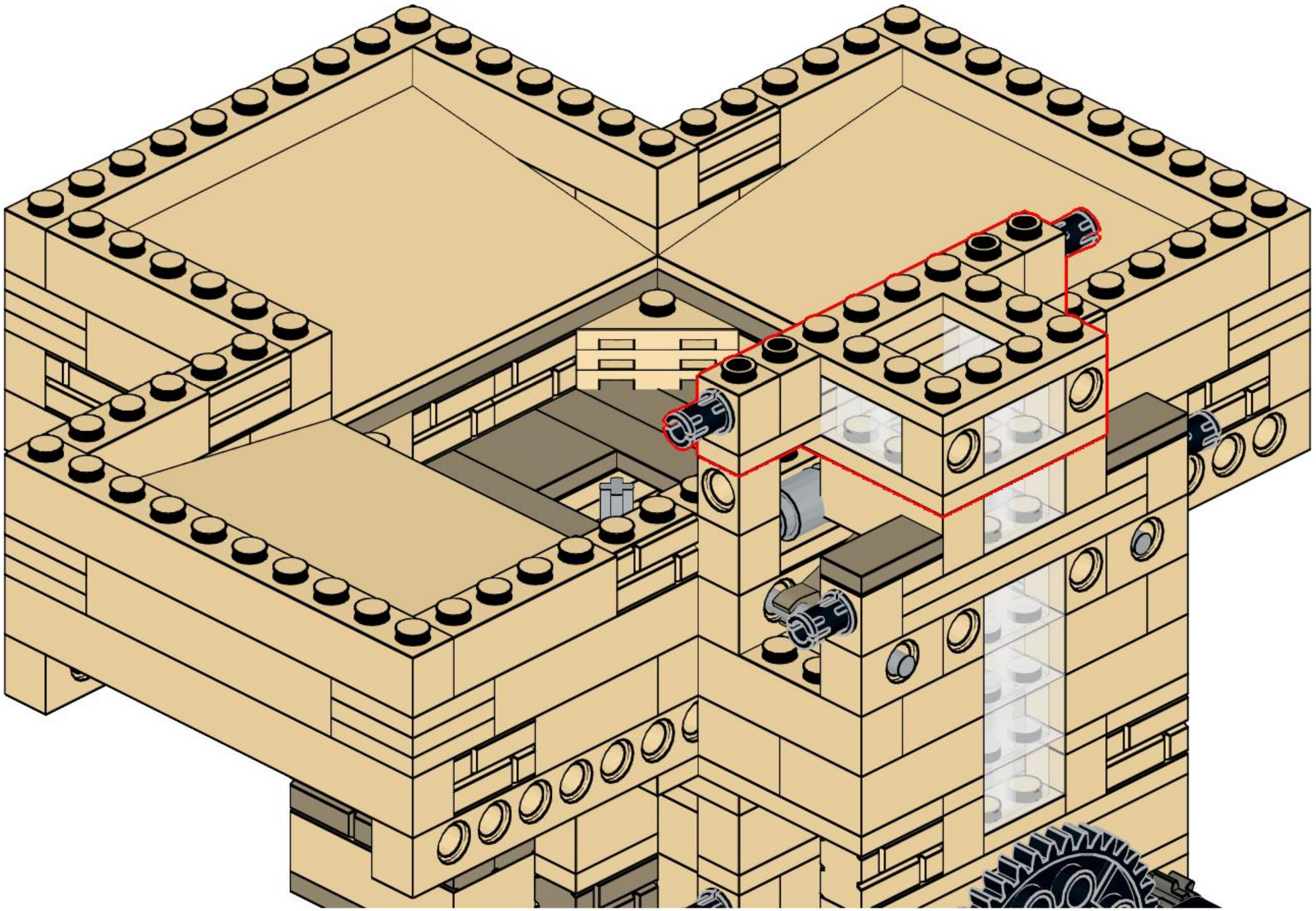

78

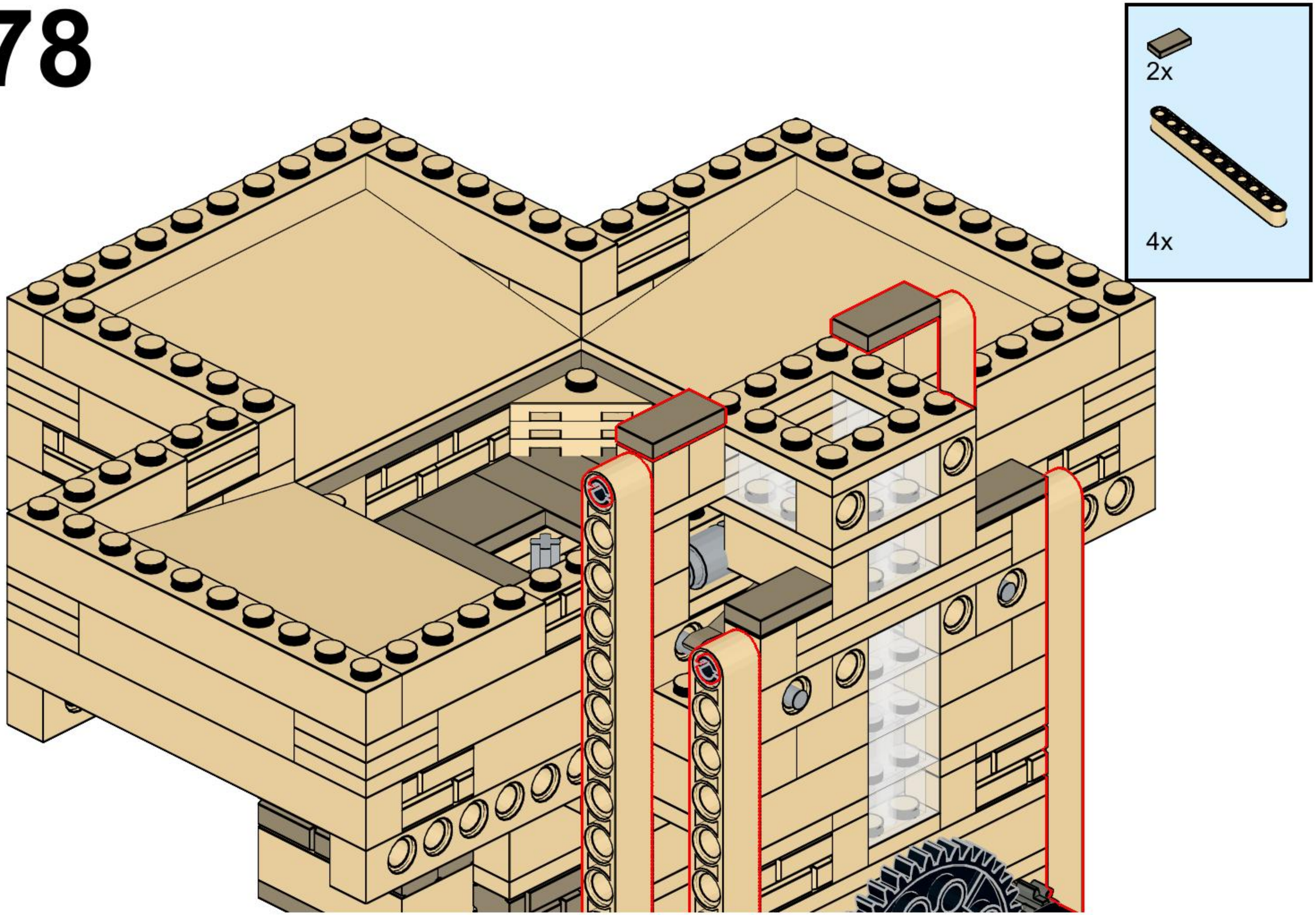

79

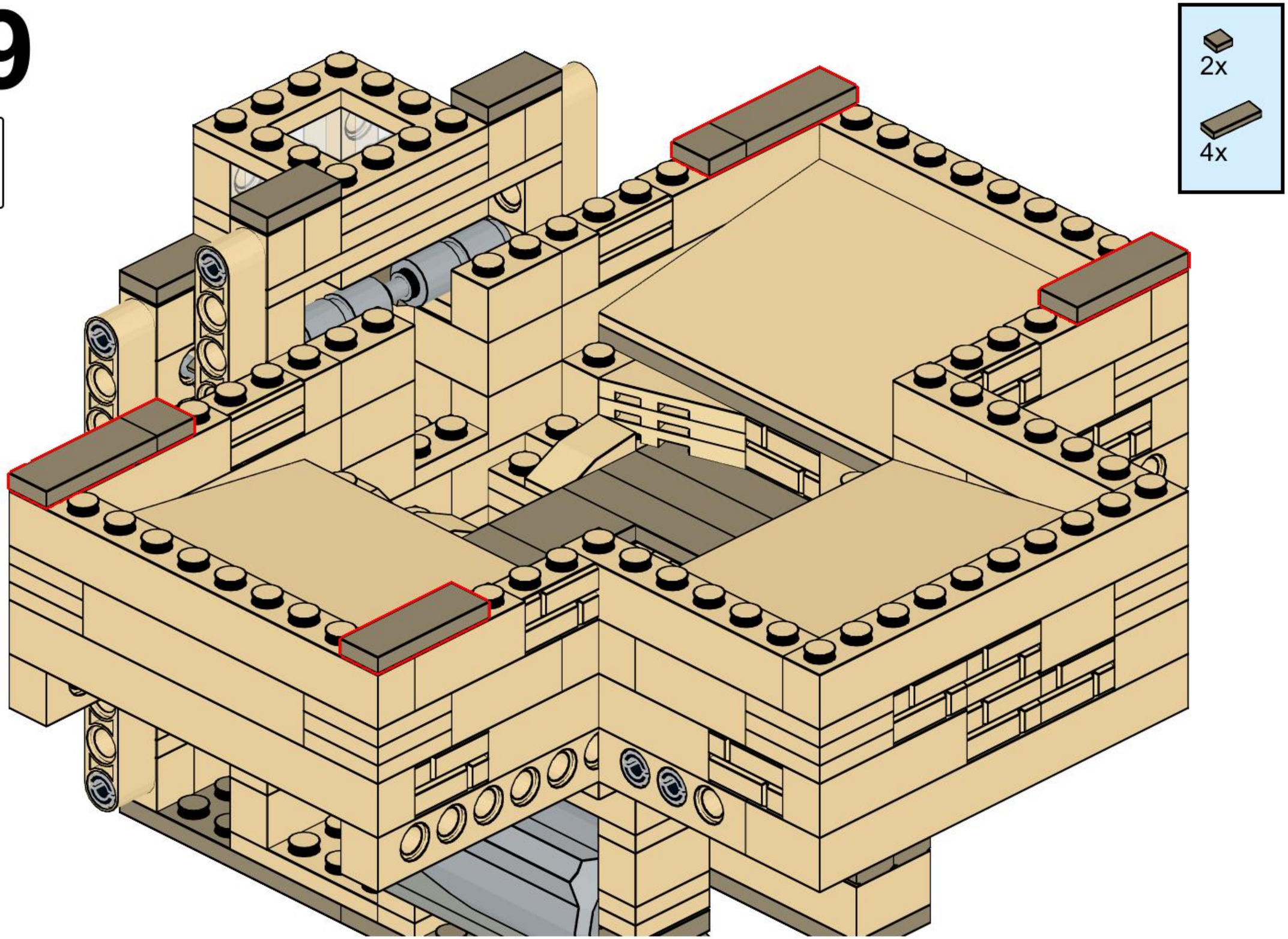

80

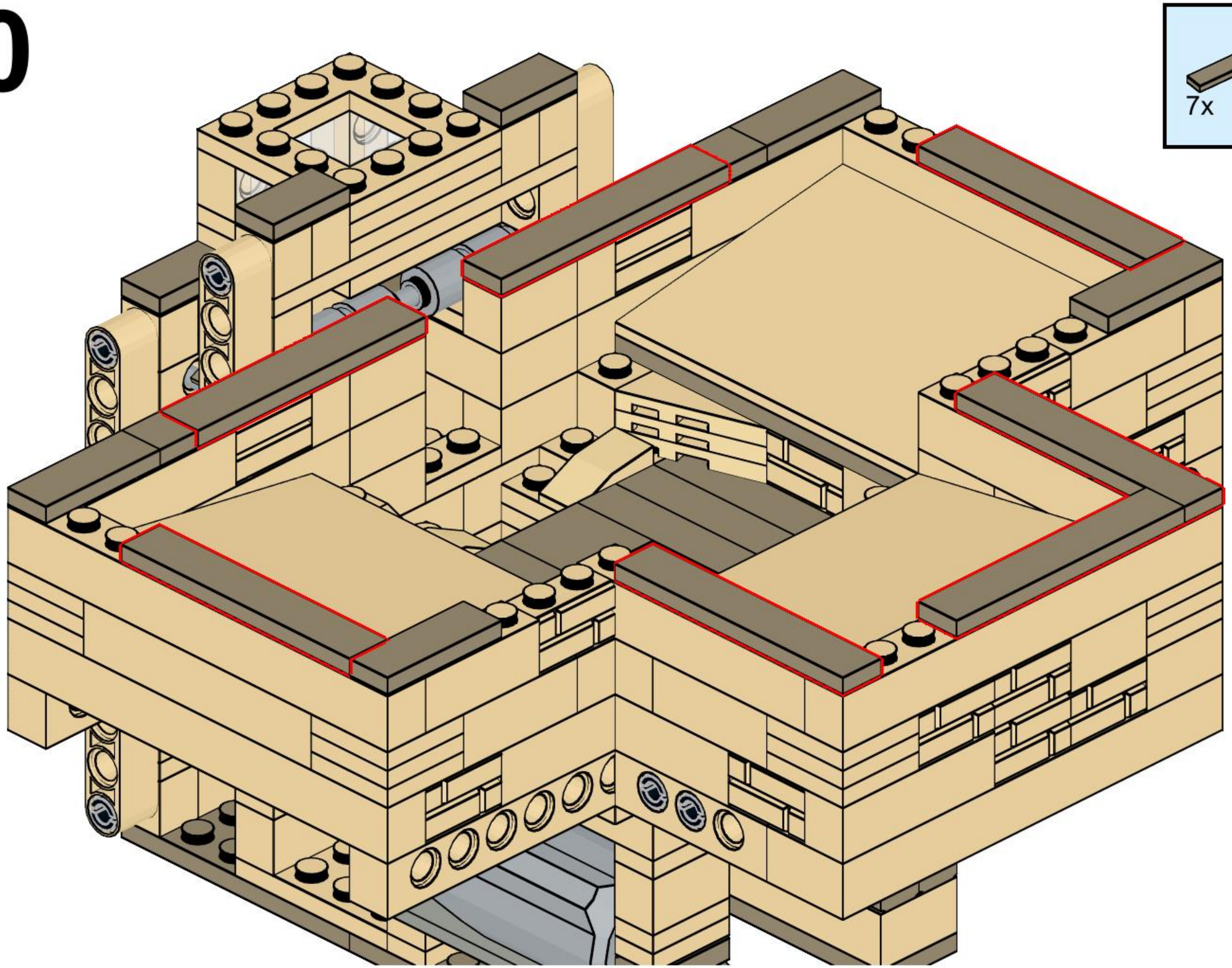

81

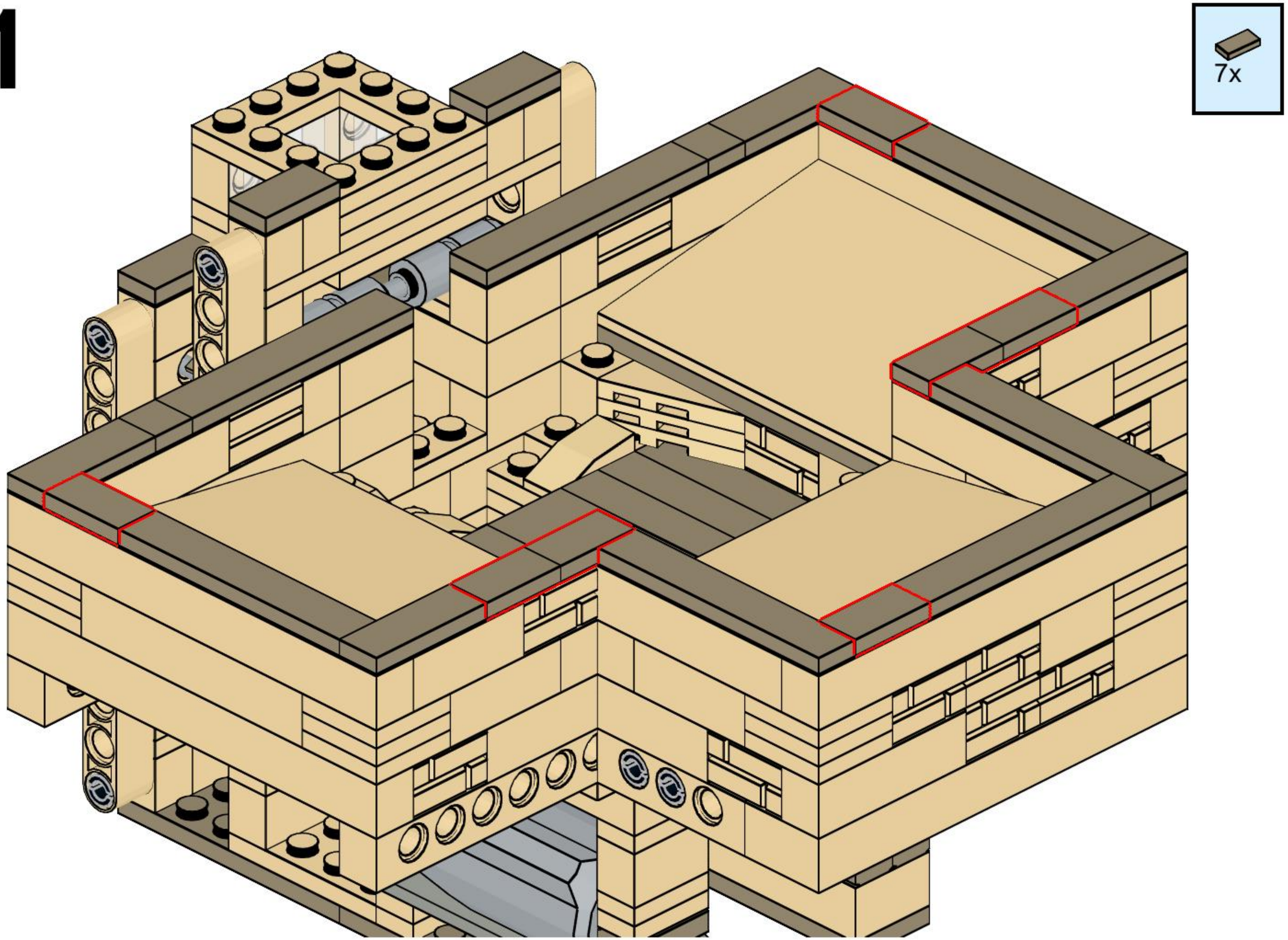

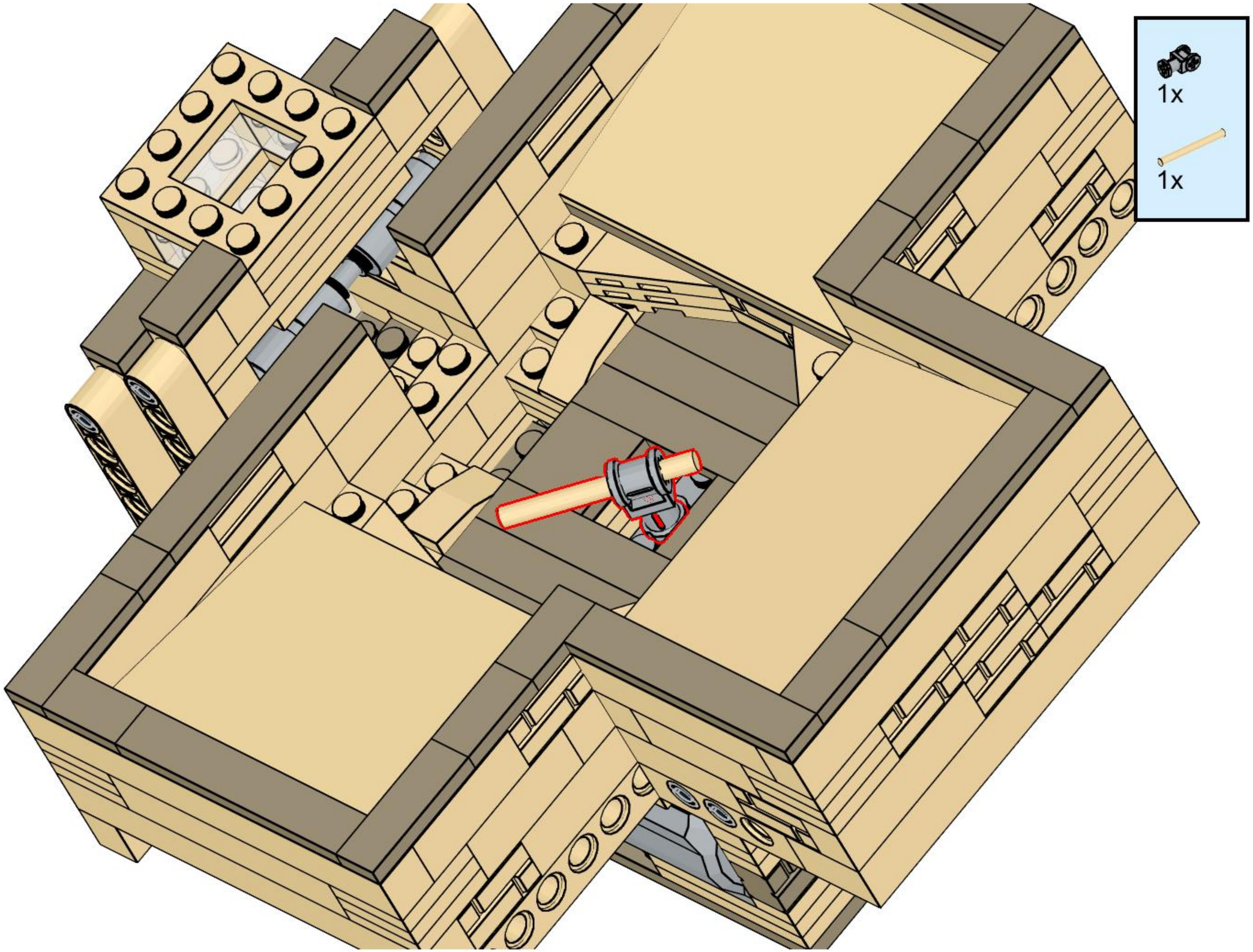

82

83

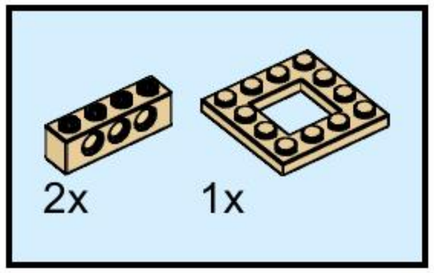

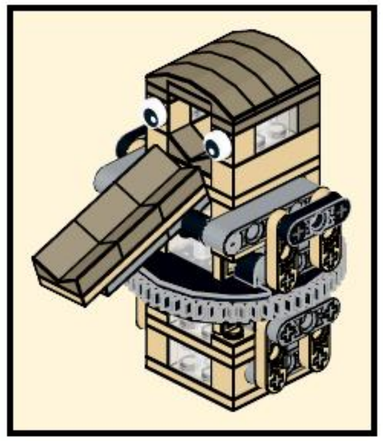

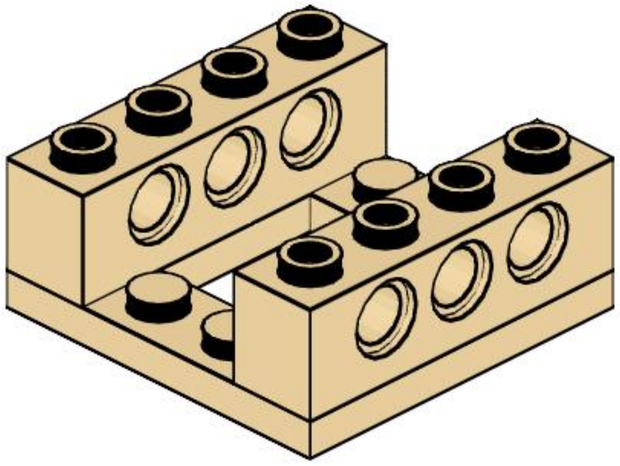

84

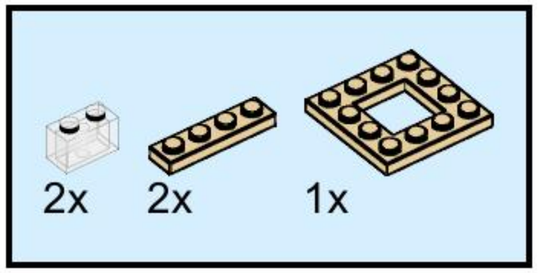

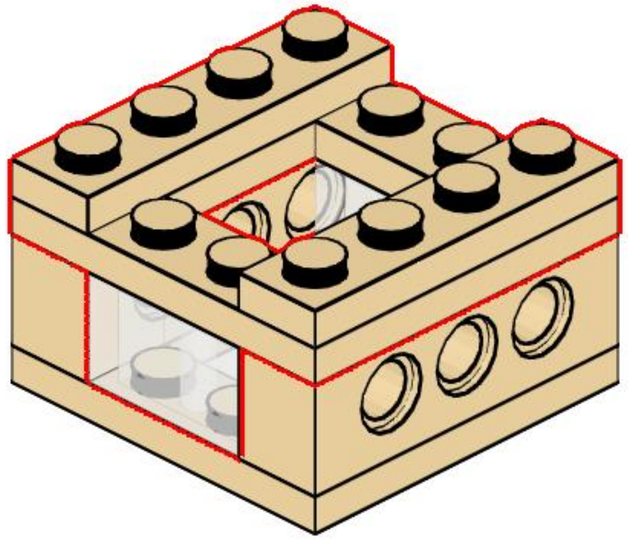

85

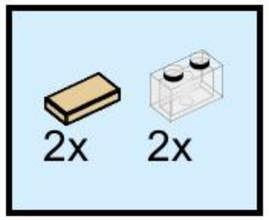

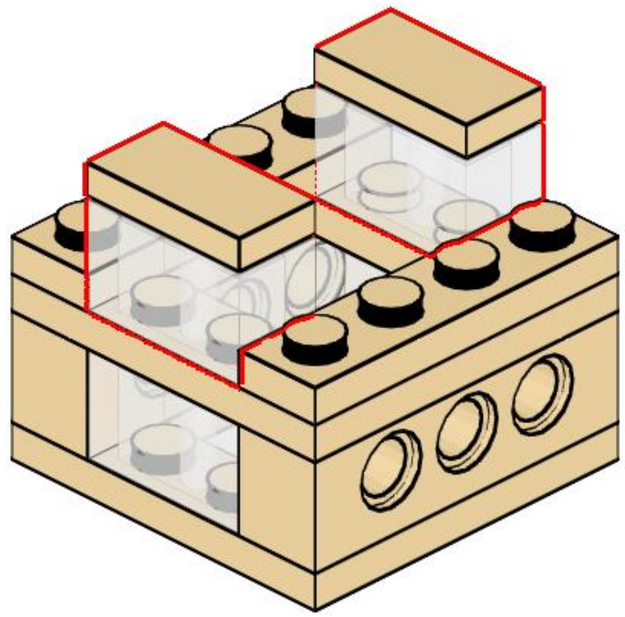

86

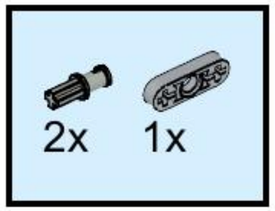

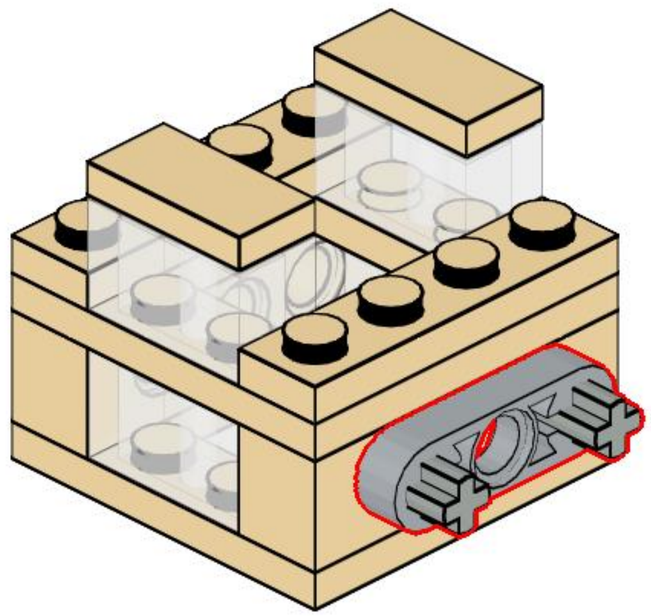

87

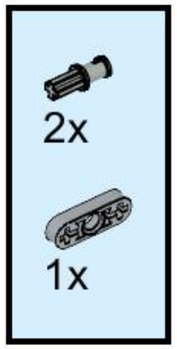

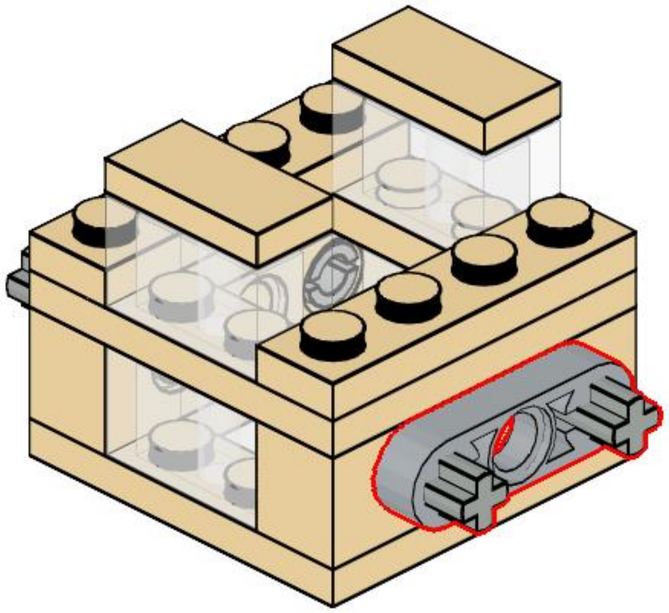

88

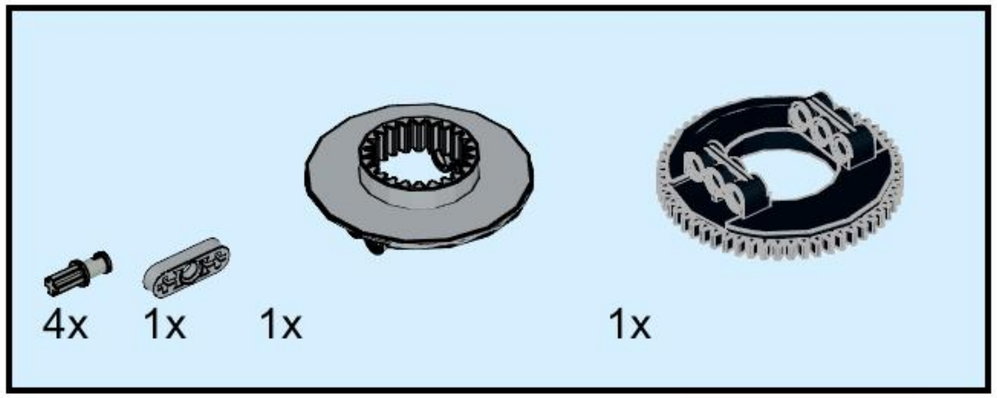

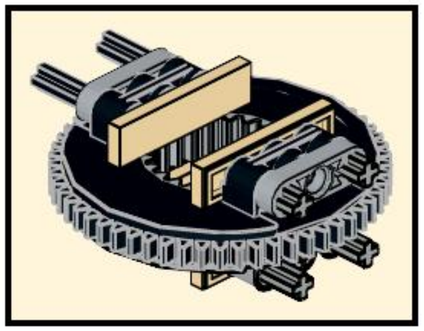

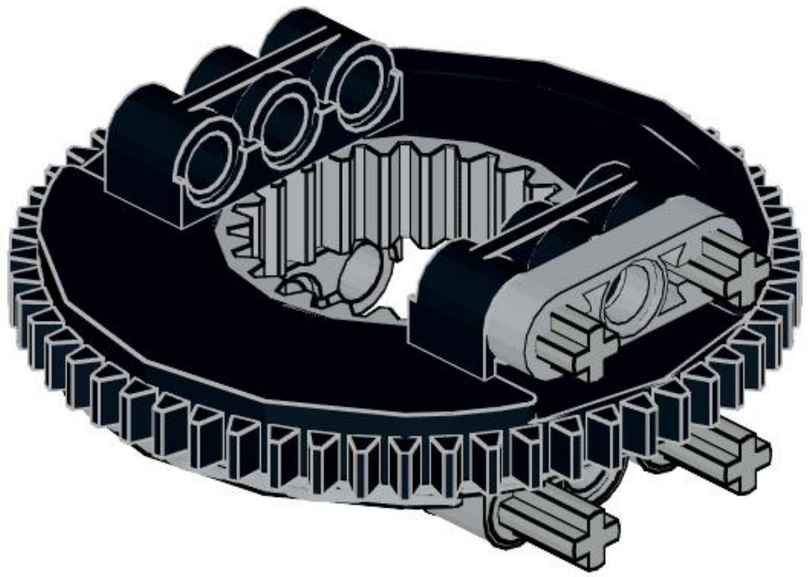

89

2x

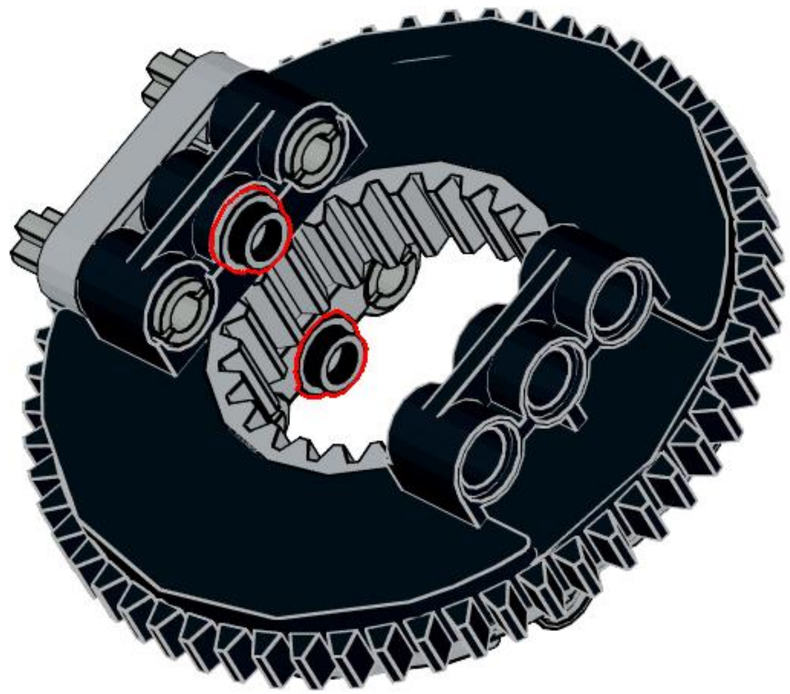

90

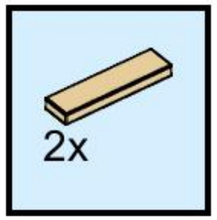

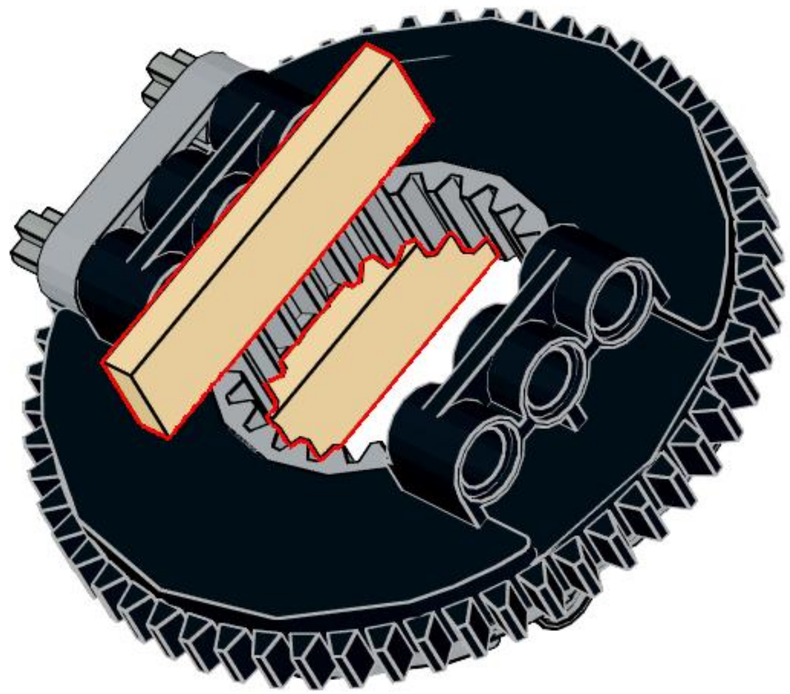

91

2x

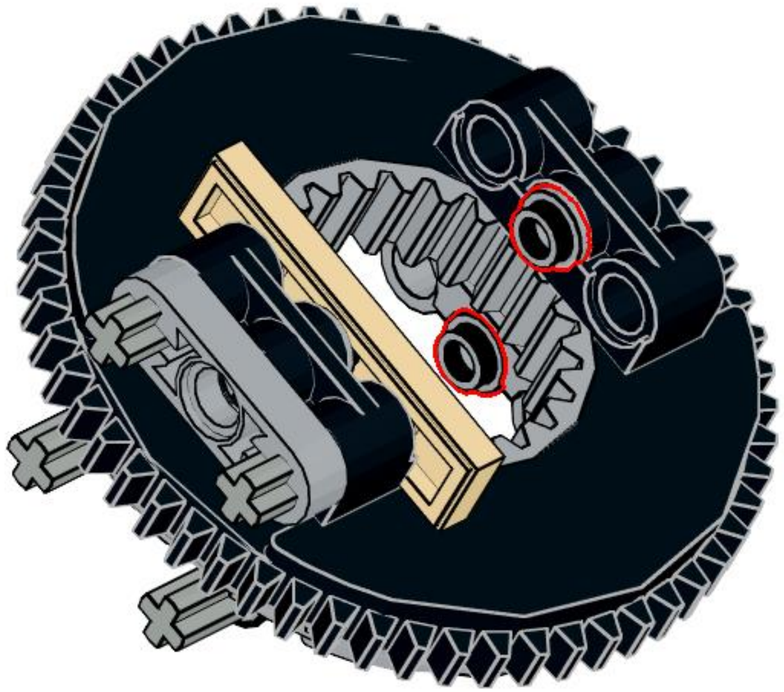

92

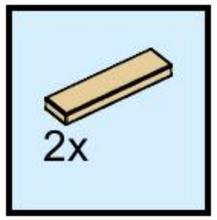

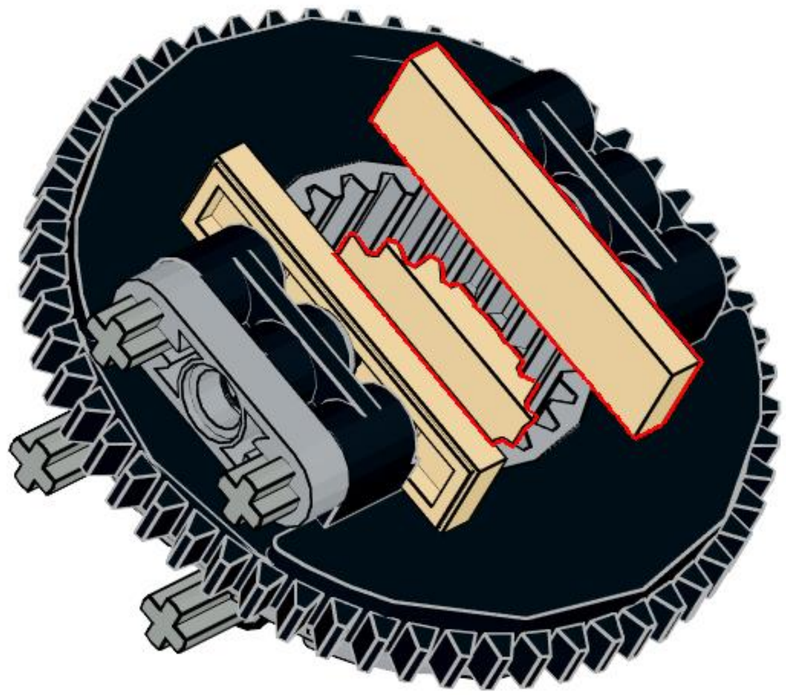

93

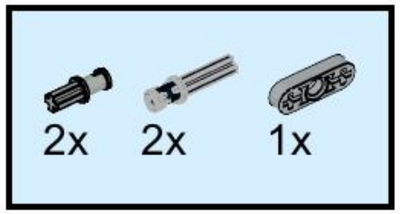

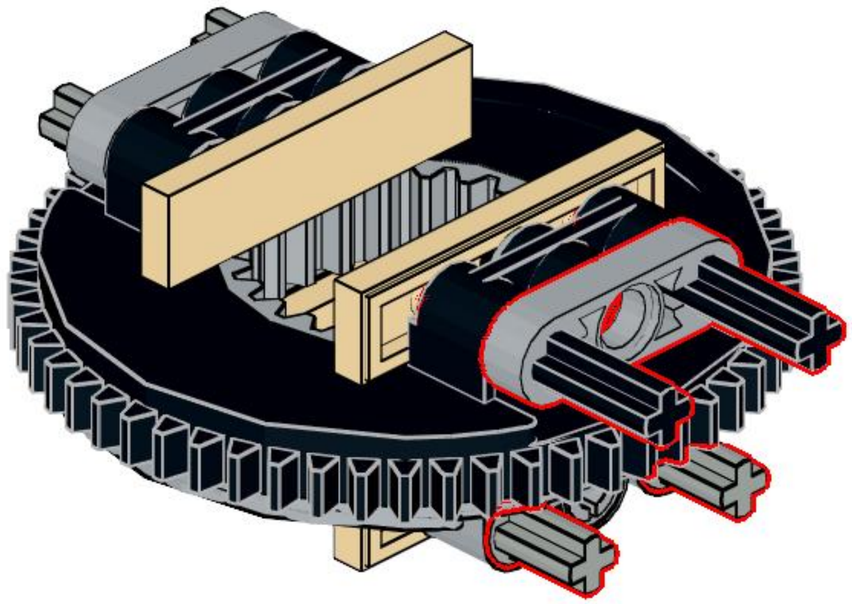

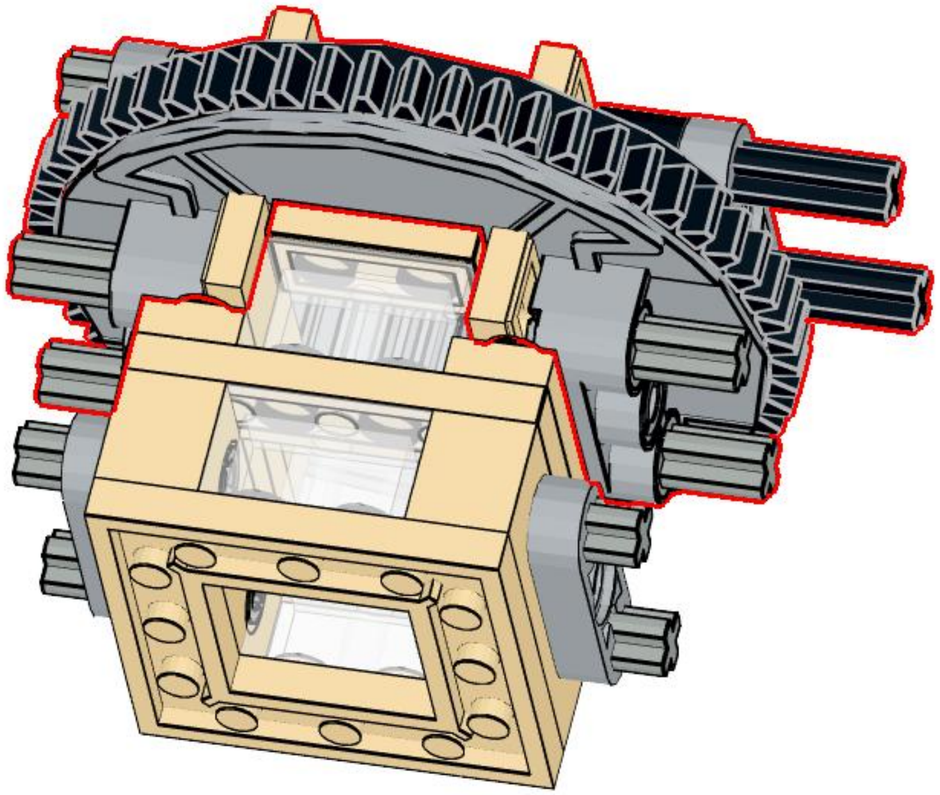

95

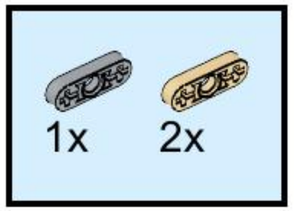

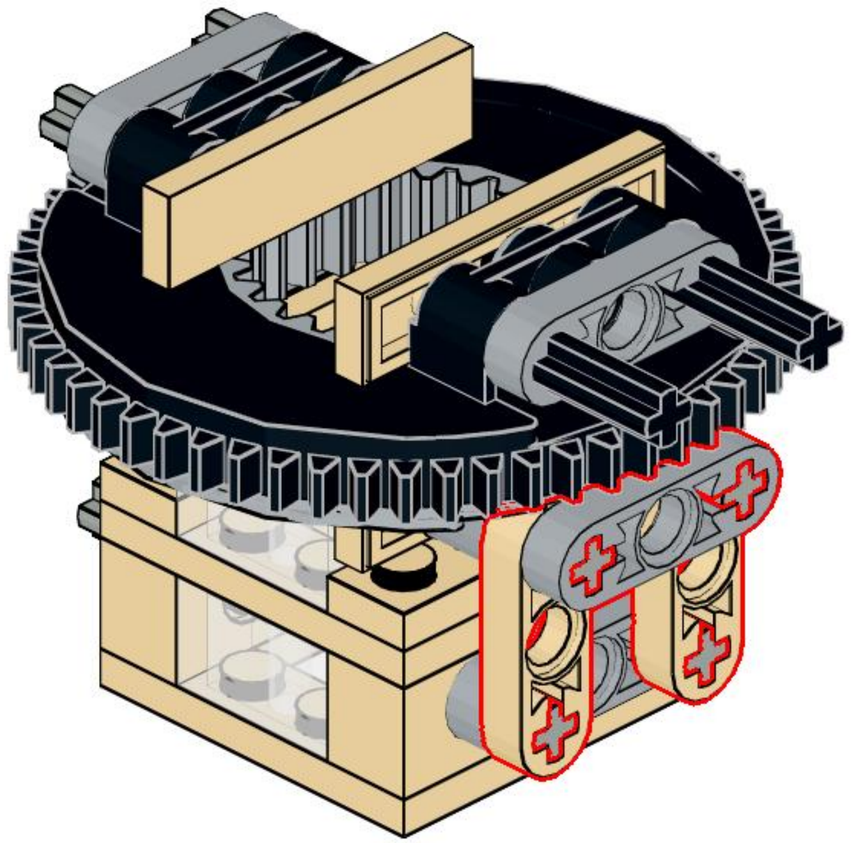

96

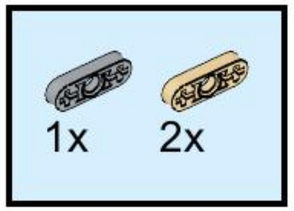

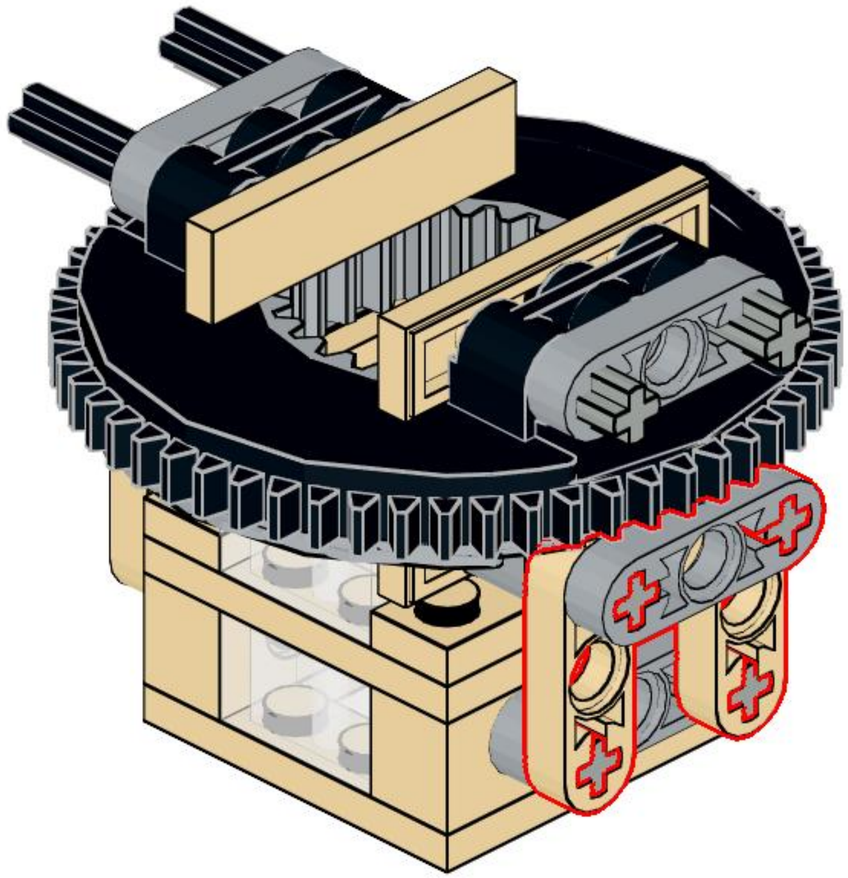

97

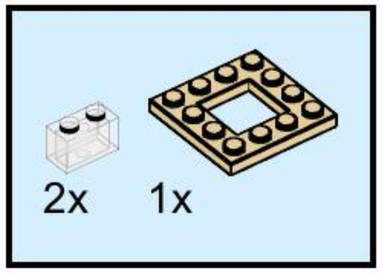

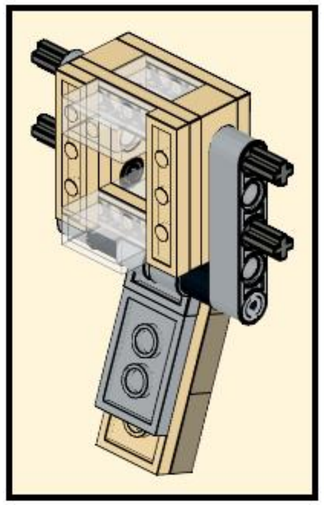

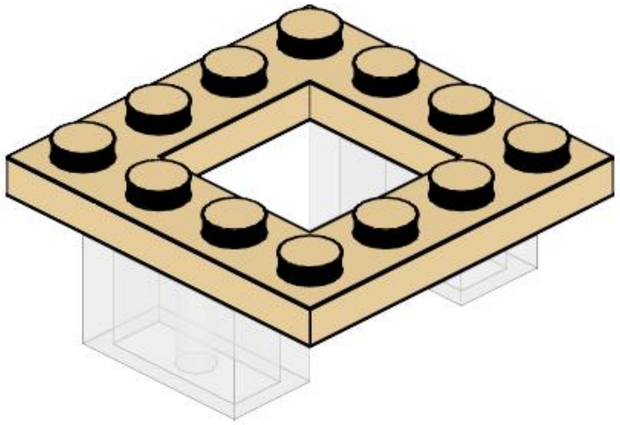

98

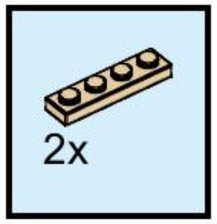

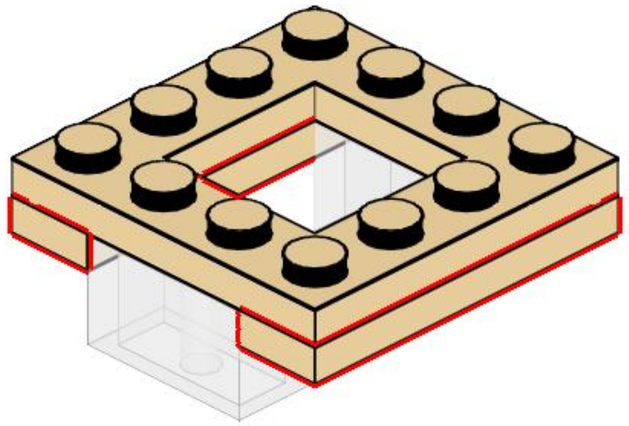

99

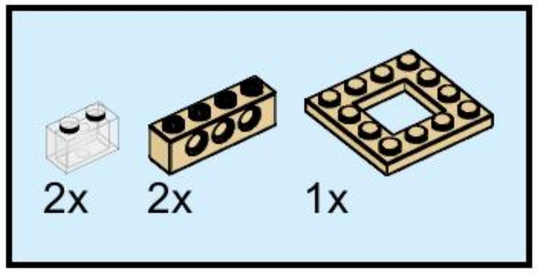

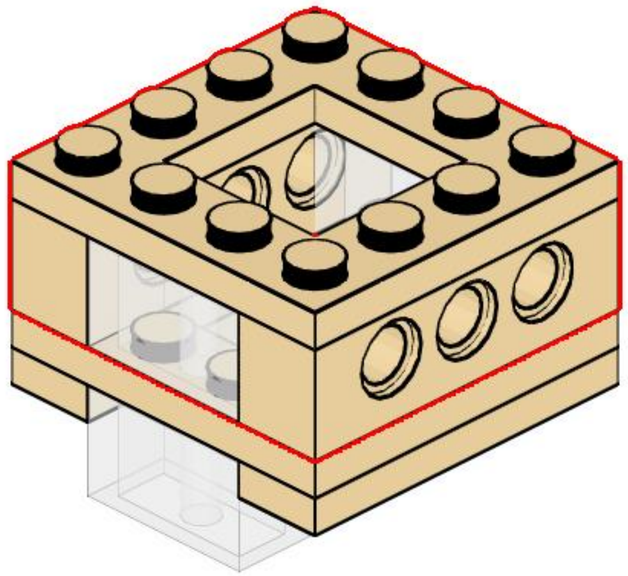

100

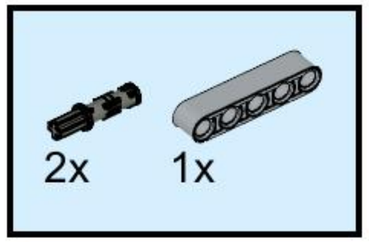

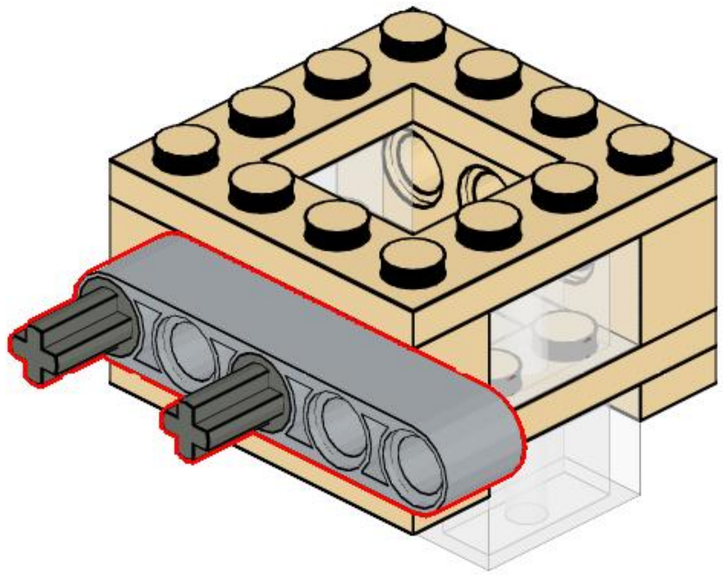

101

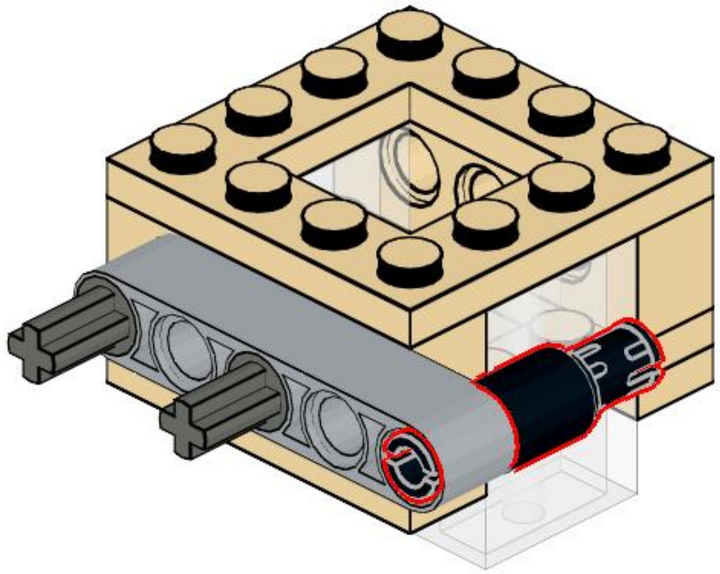

102

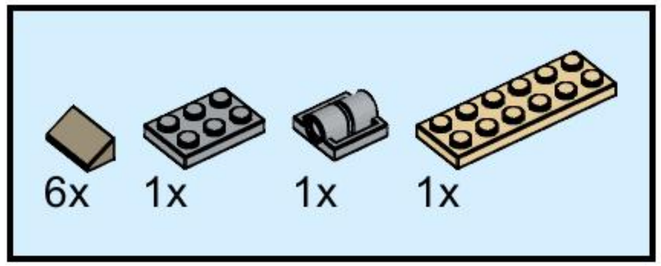

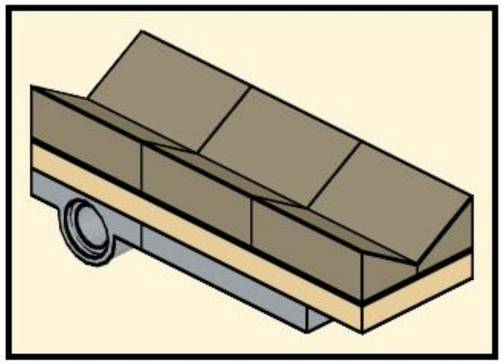

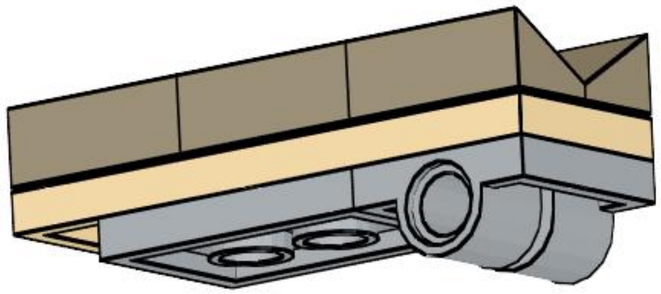

103

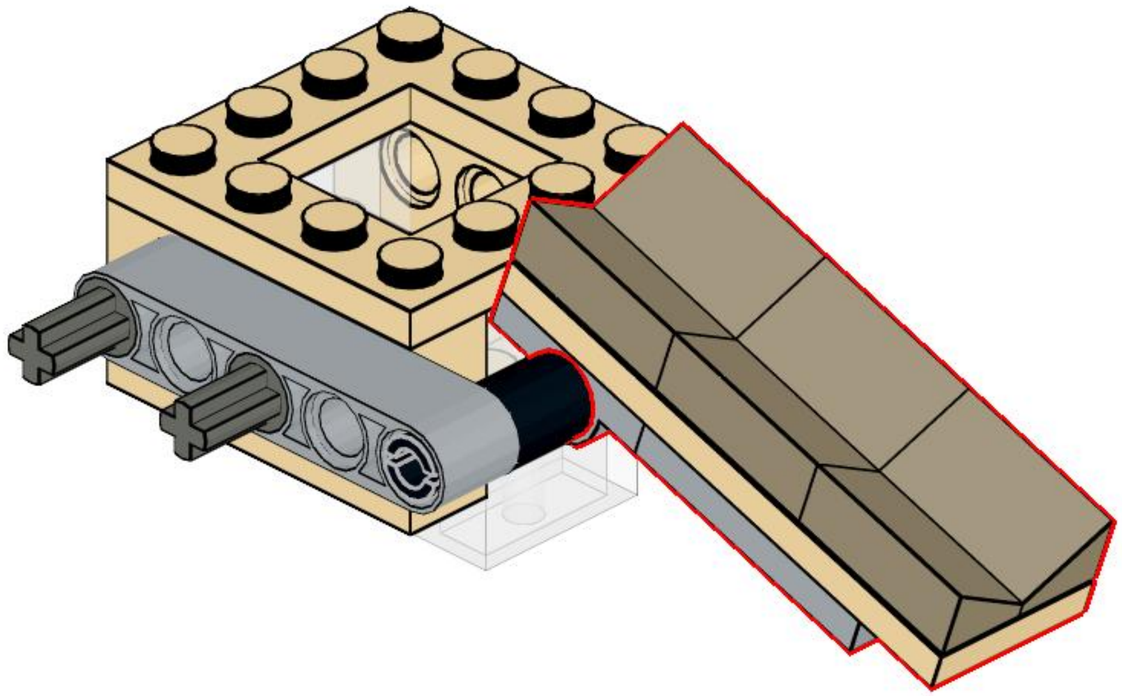

104

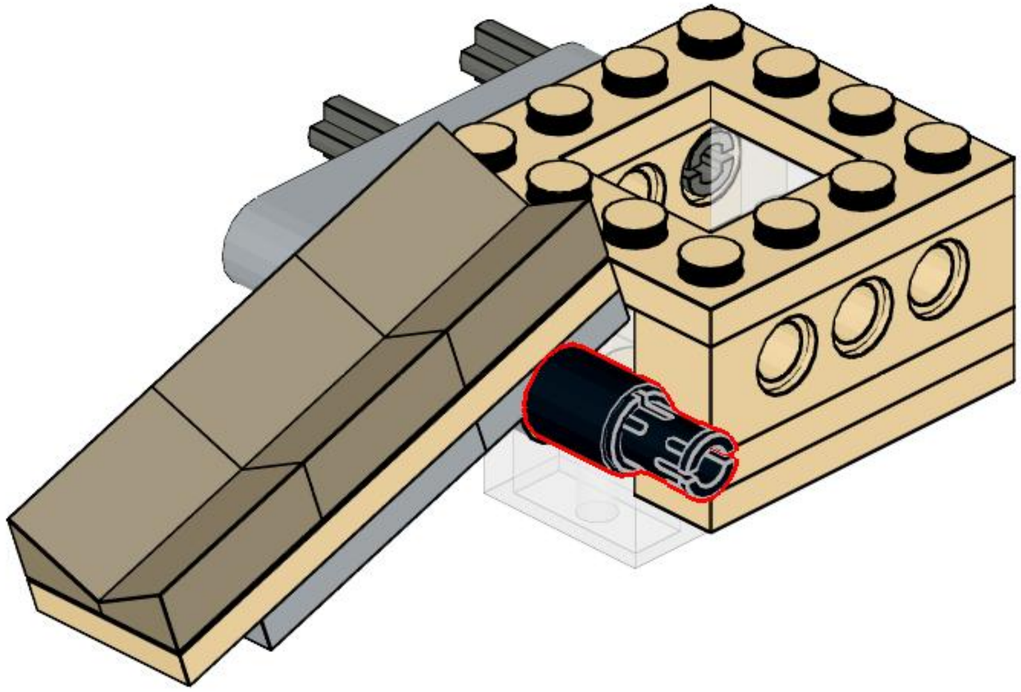

105

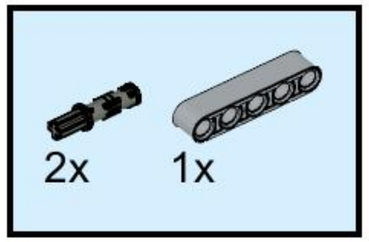

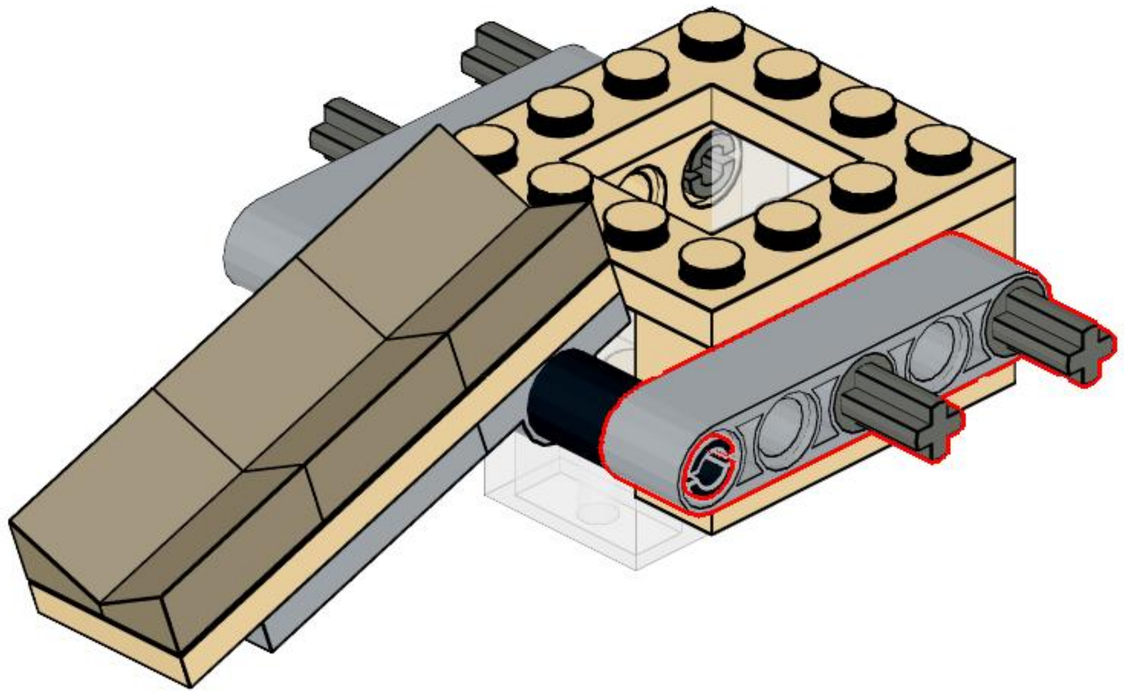

106

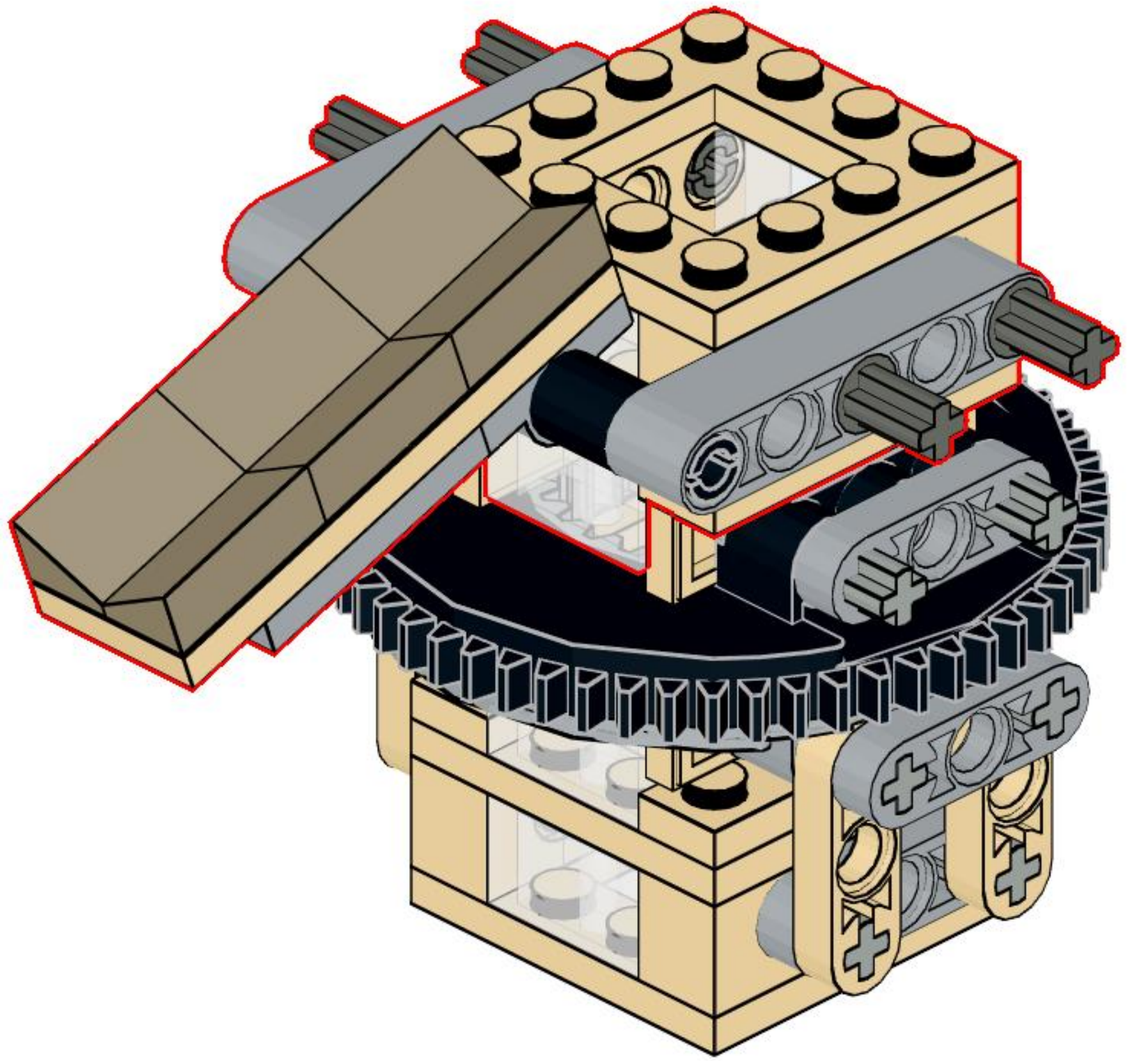

107

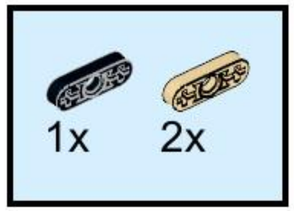

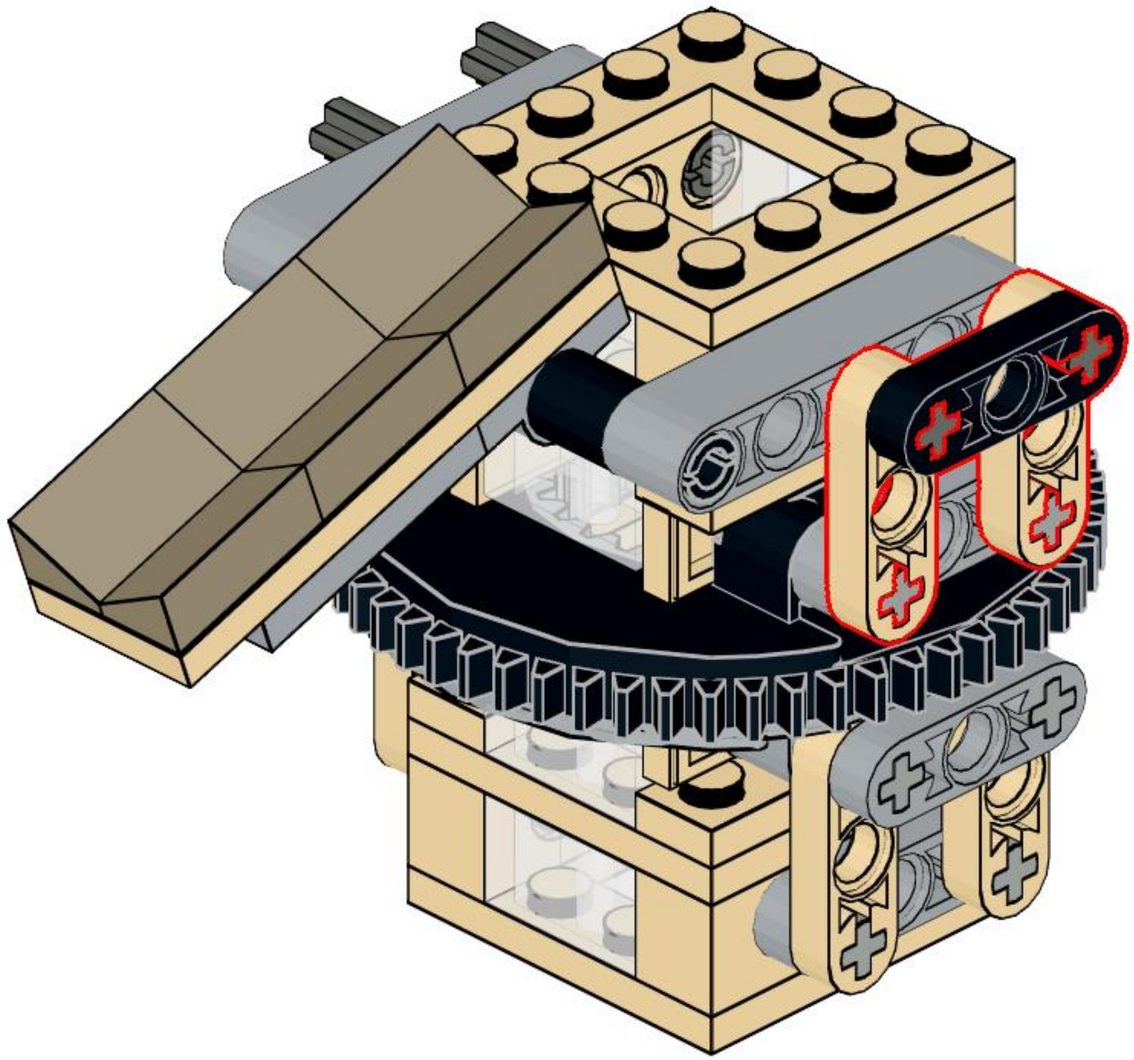

108

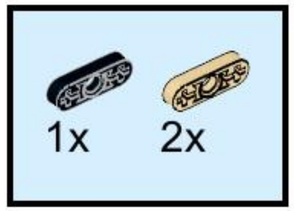

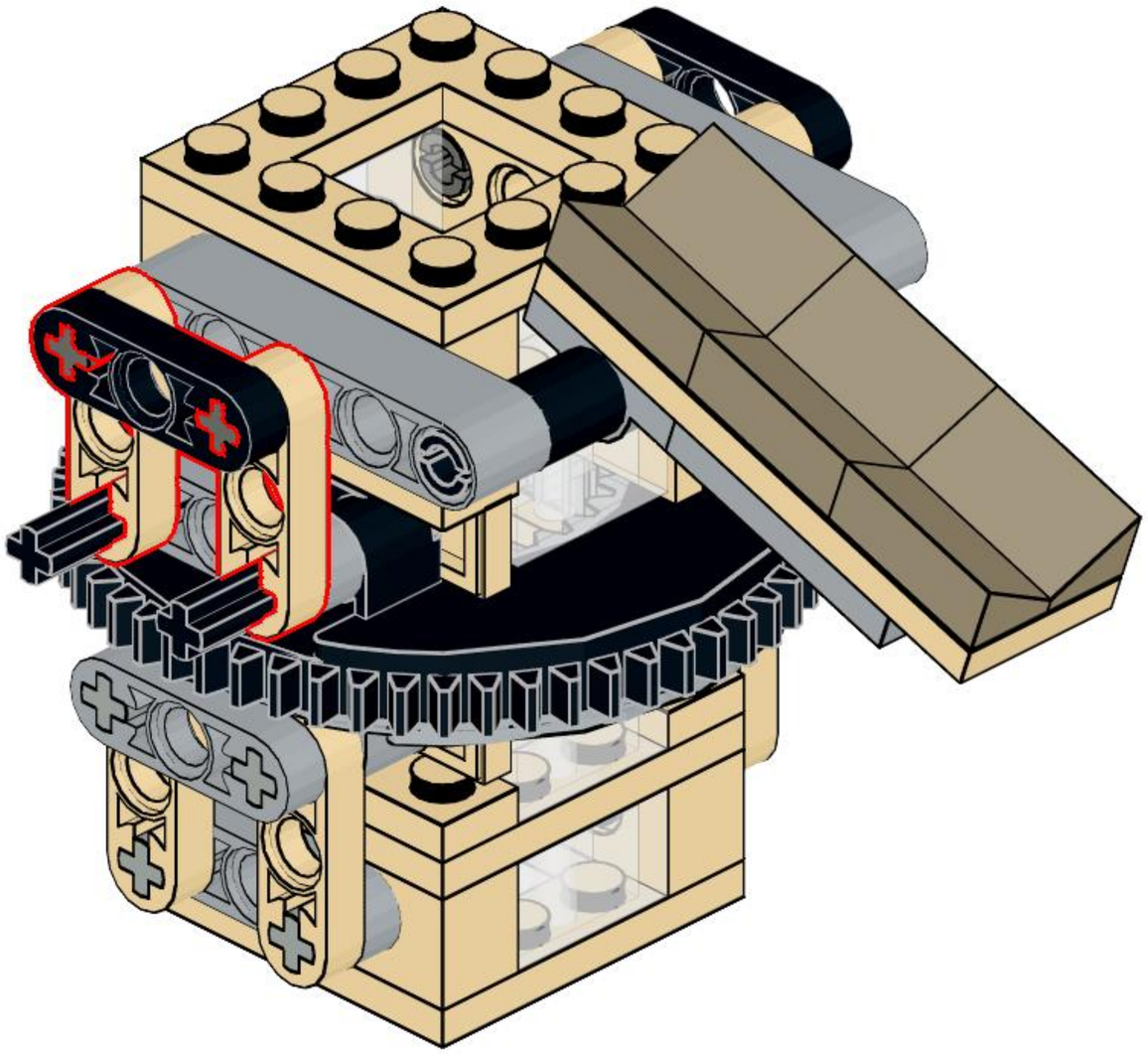

109

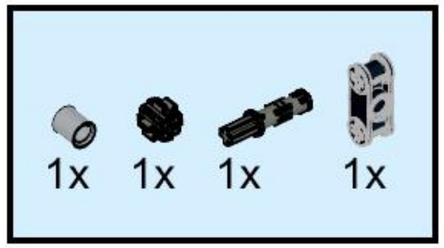

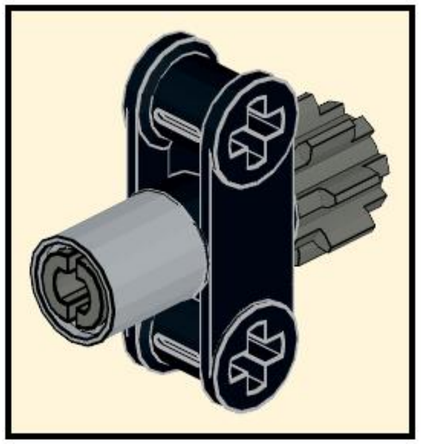

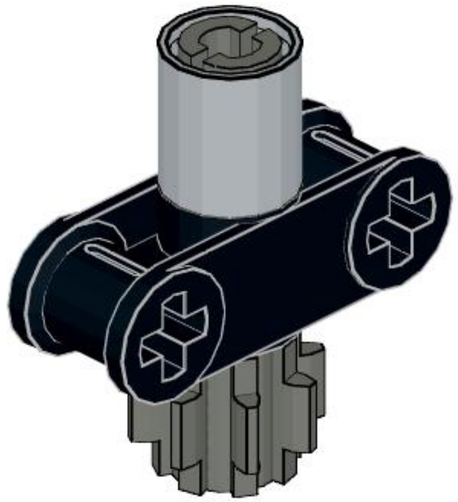

110

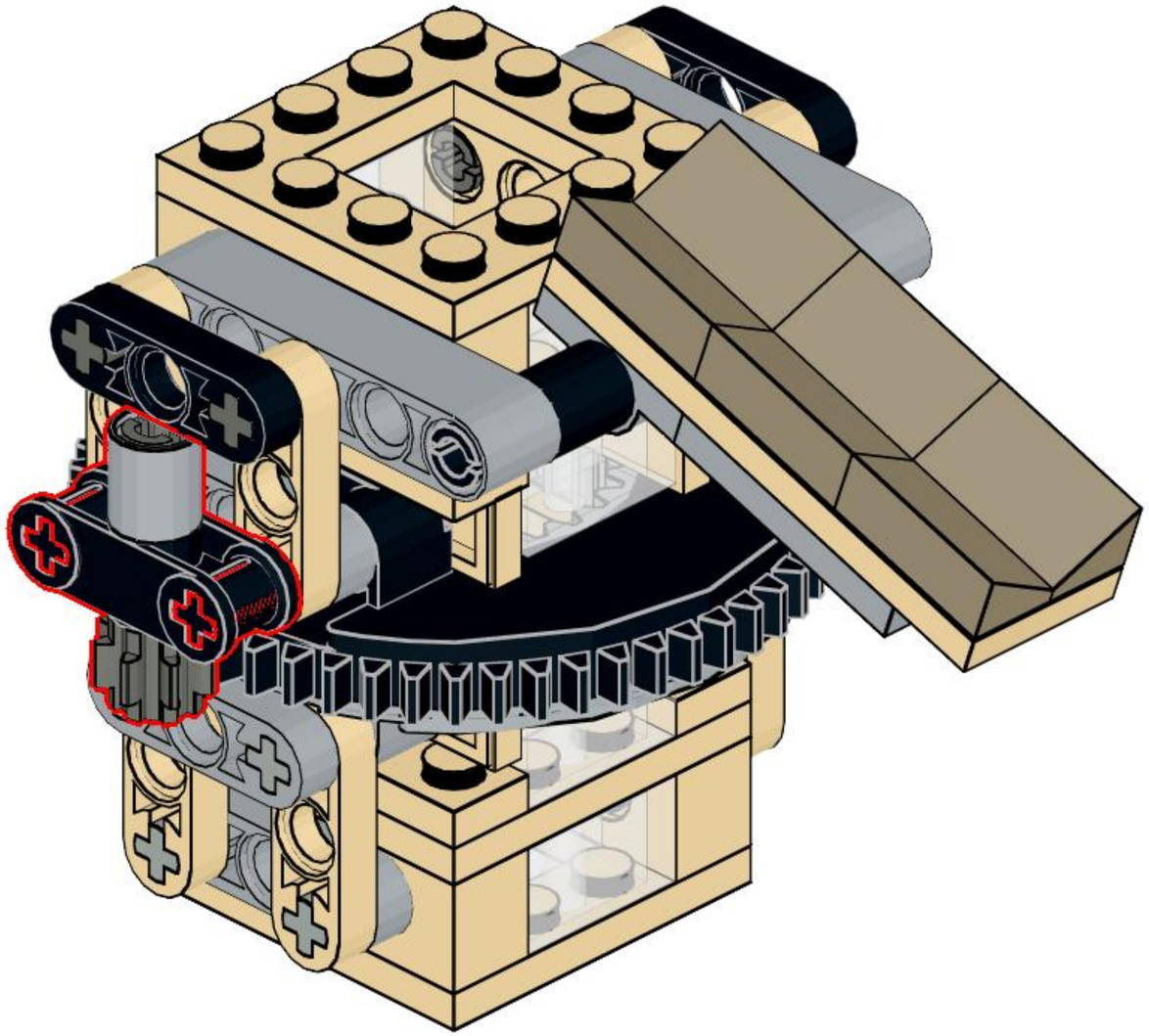

111

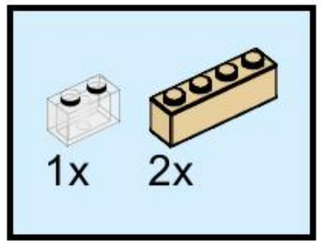

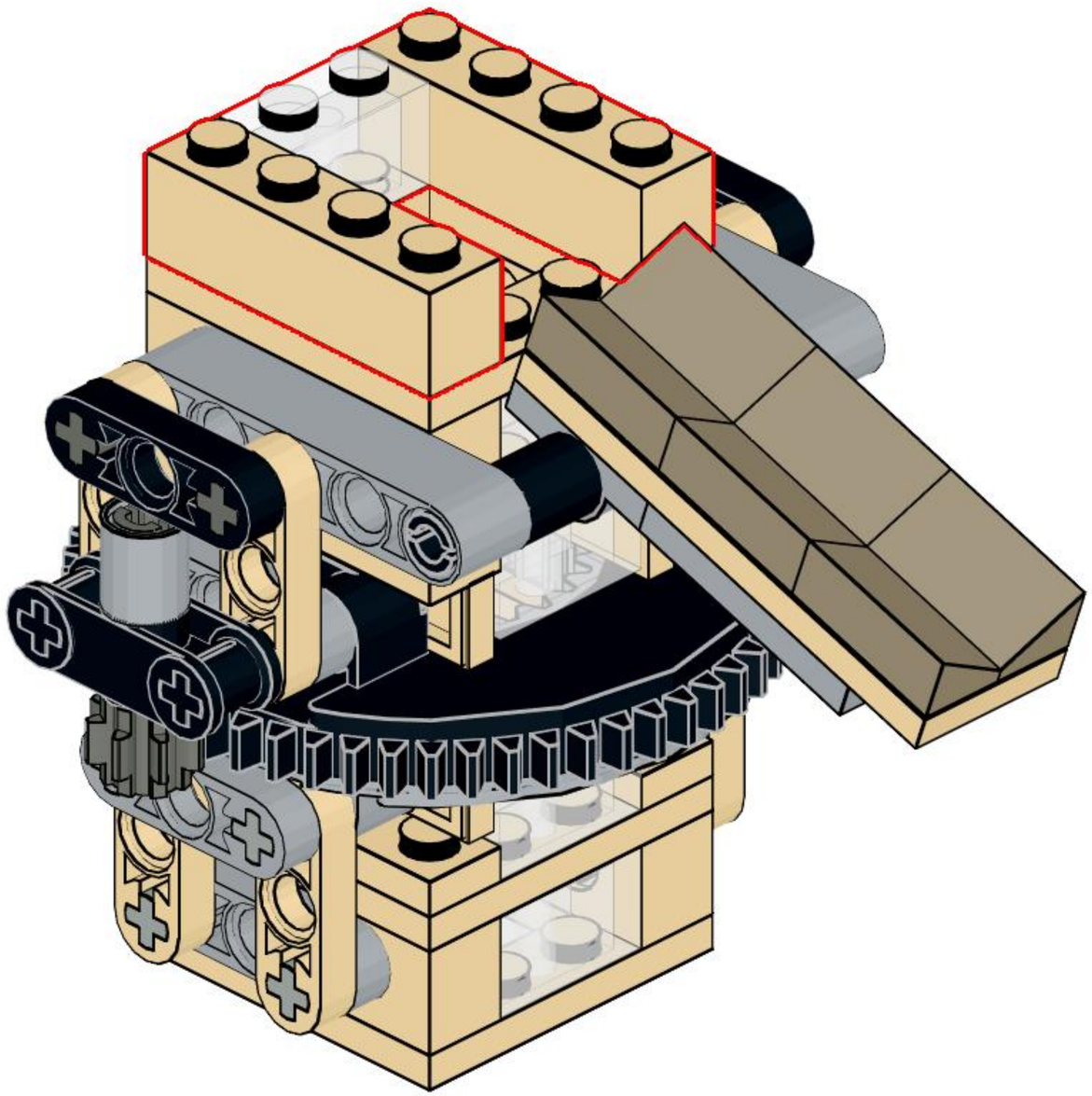

112

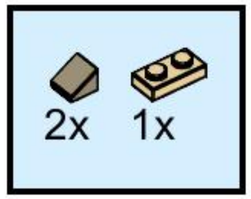

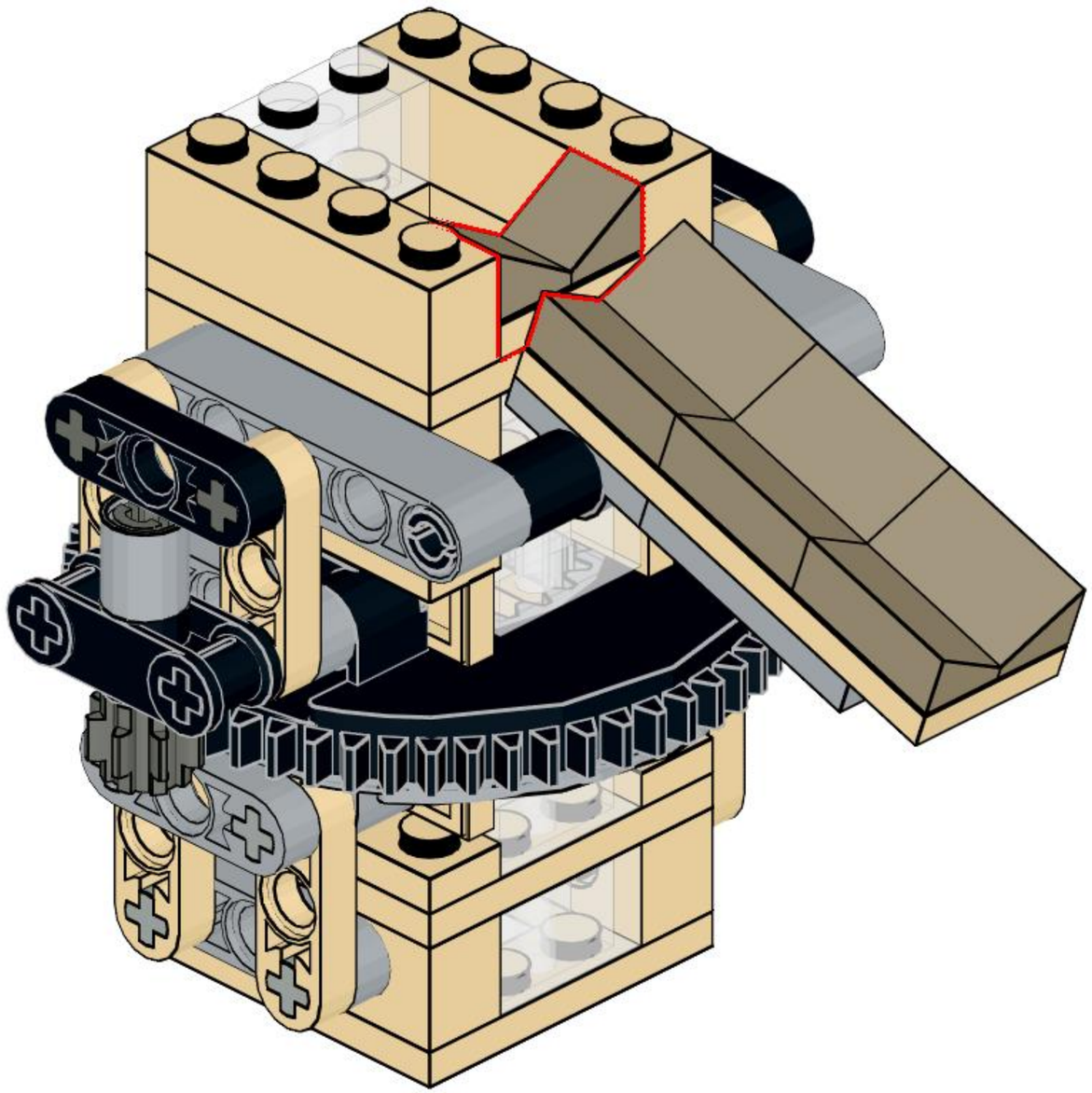

113

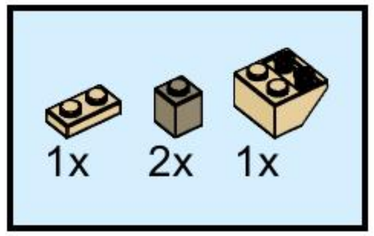

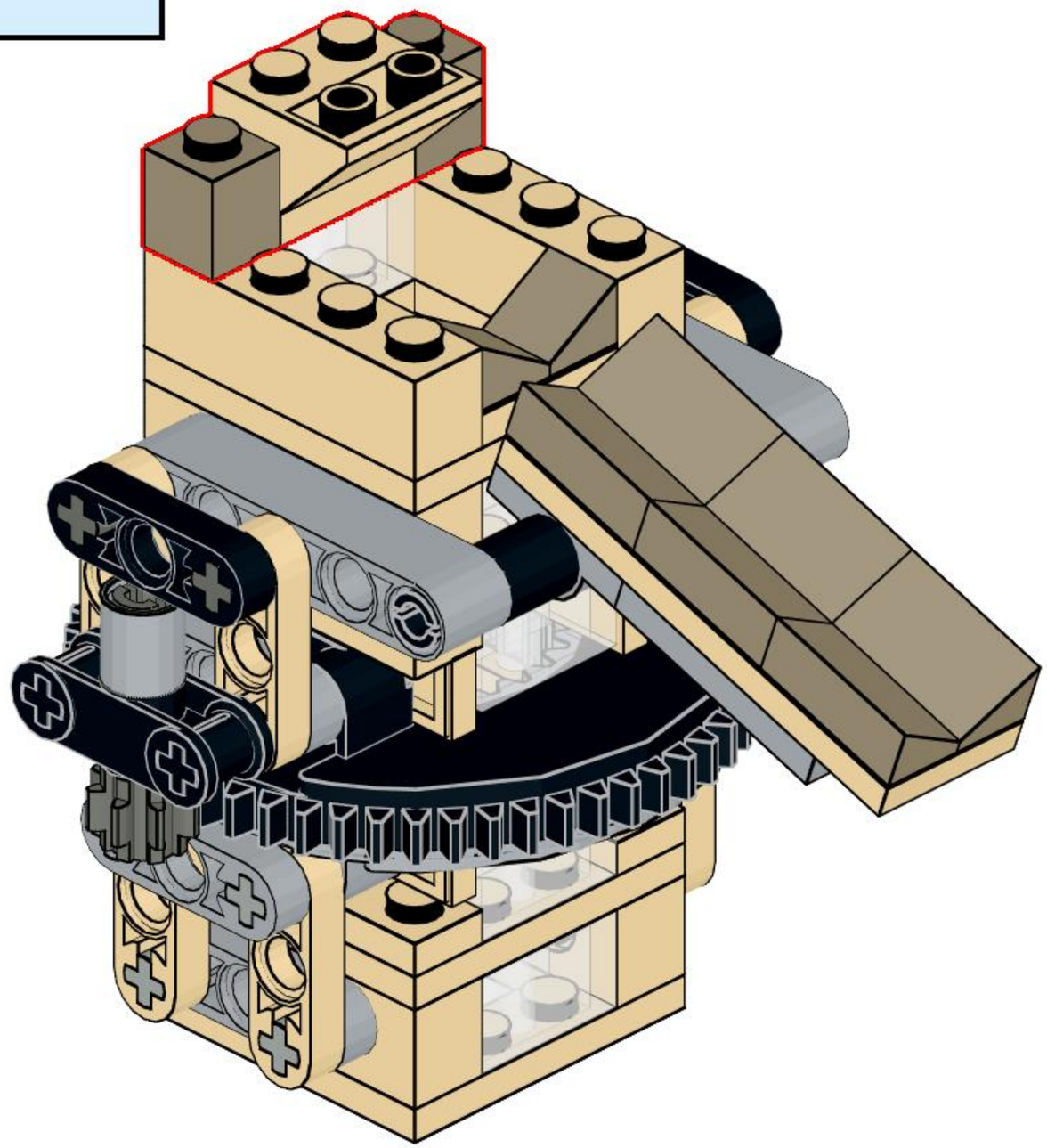

114

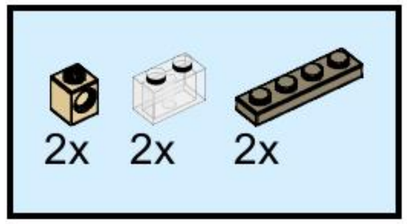

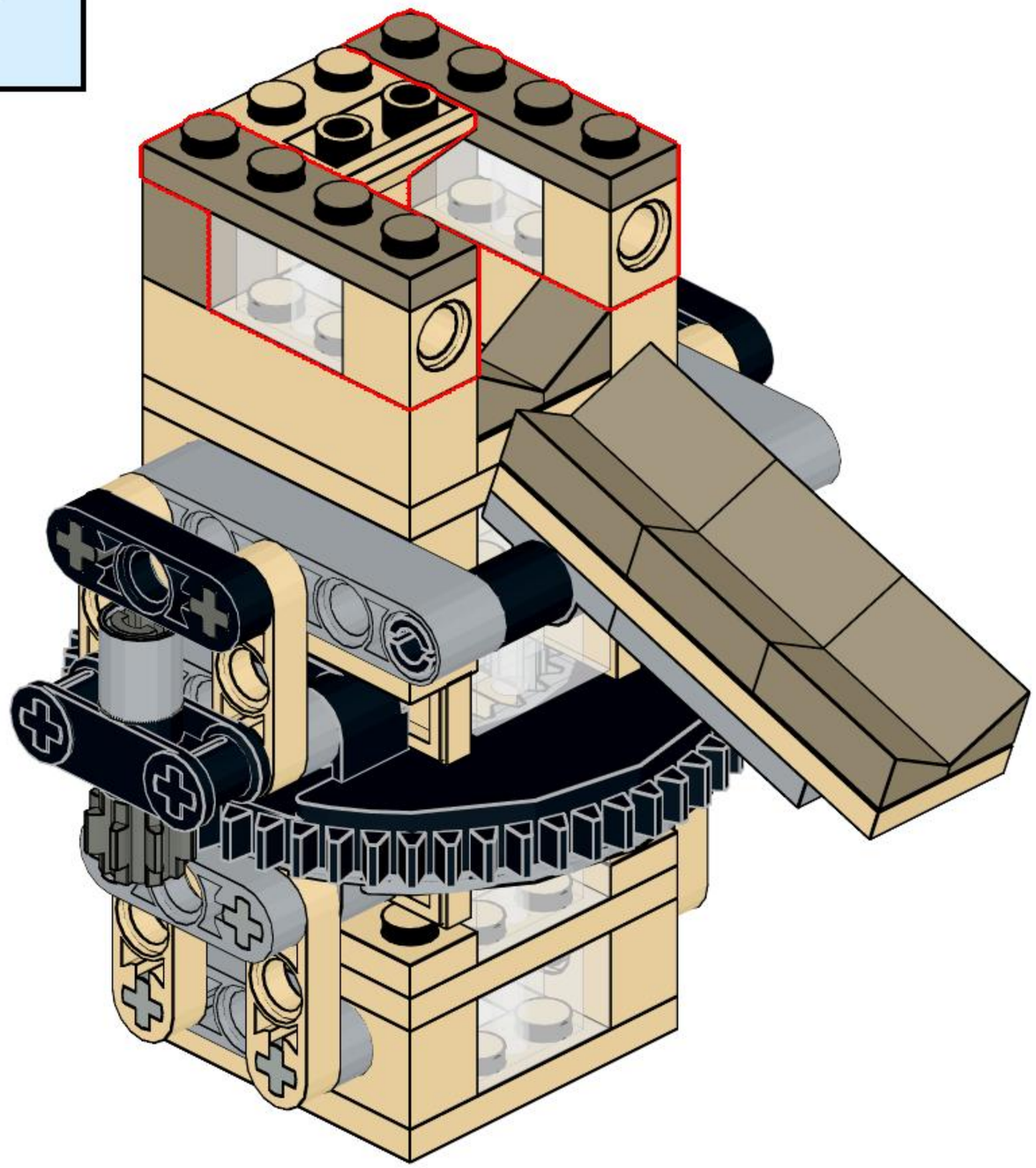

115

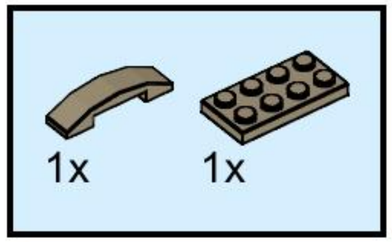

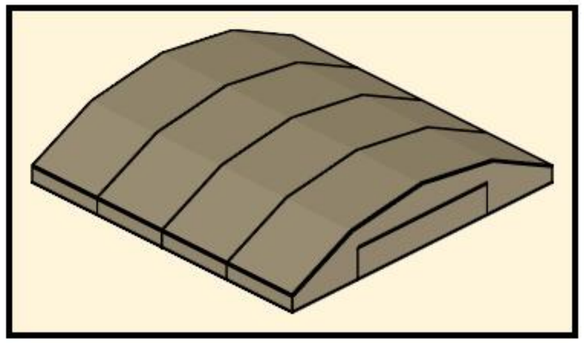

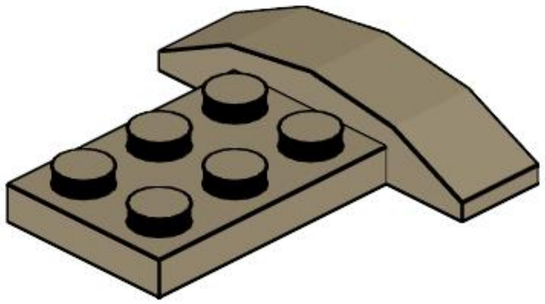

116

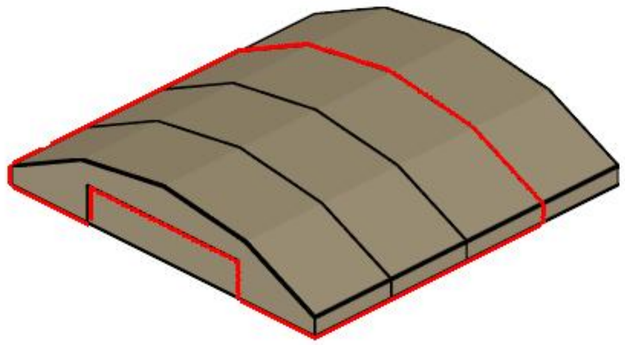

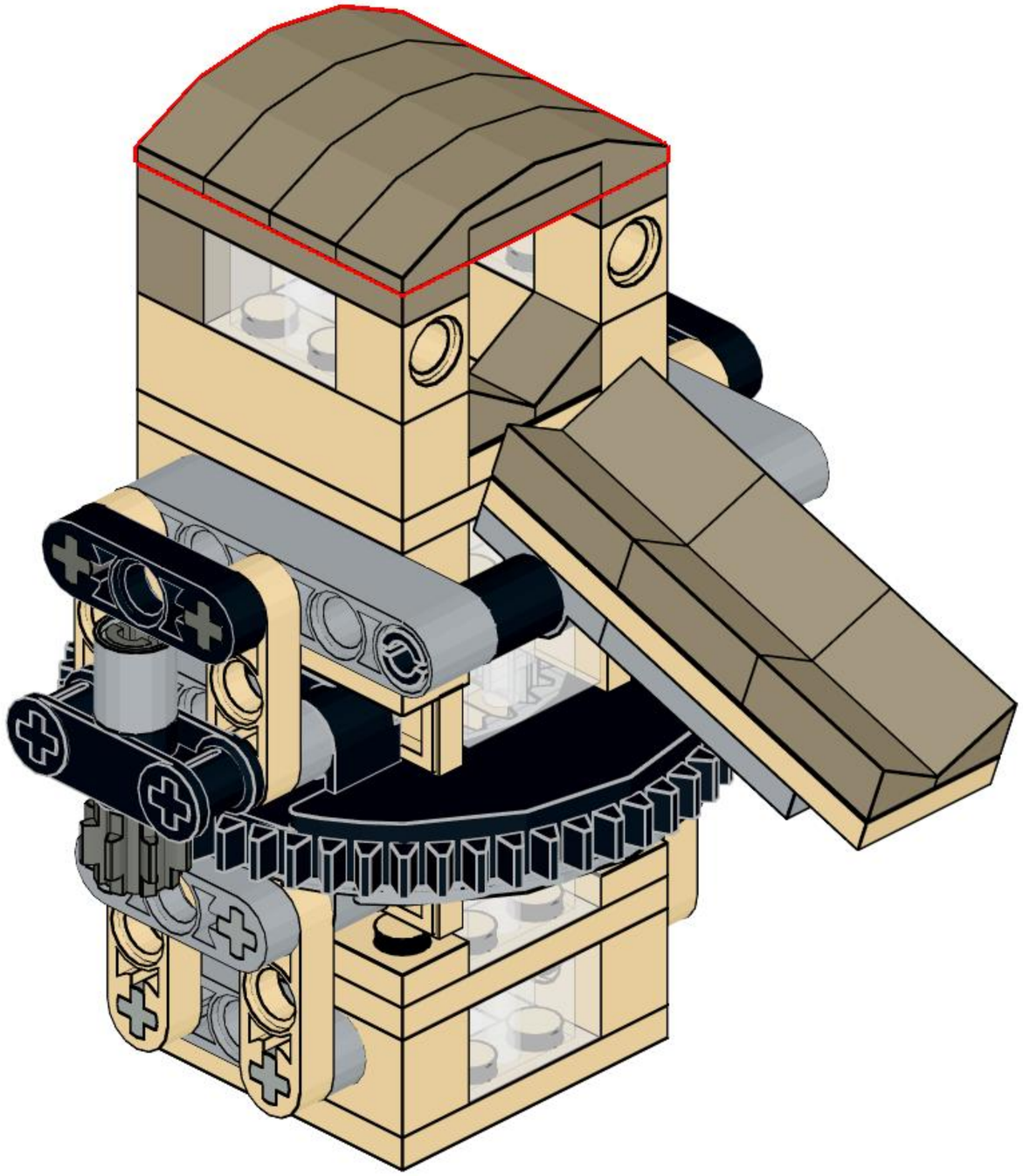

118

2x

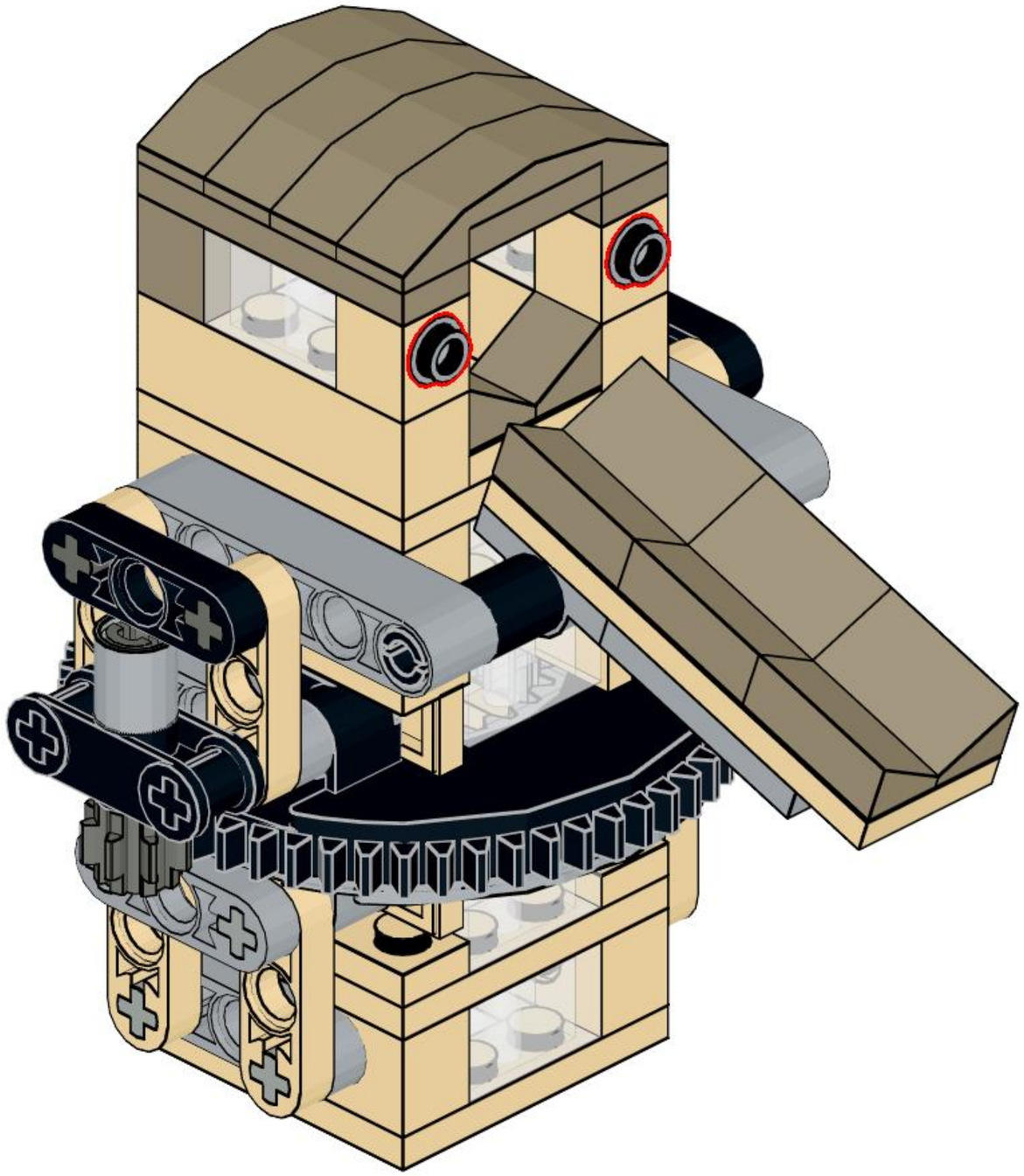

119

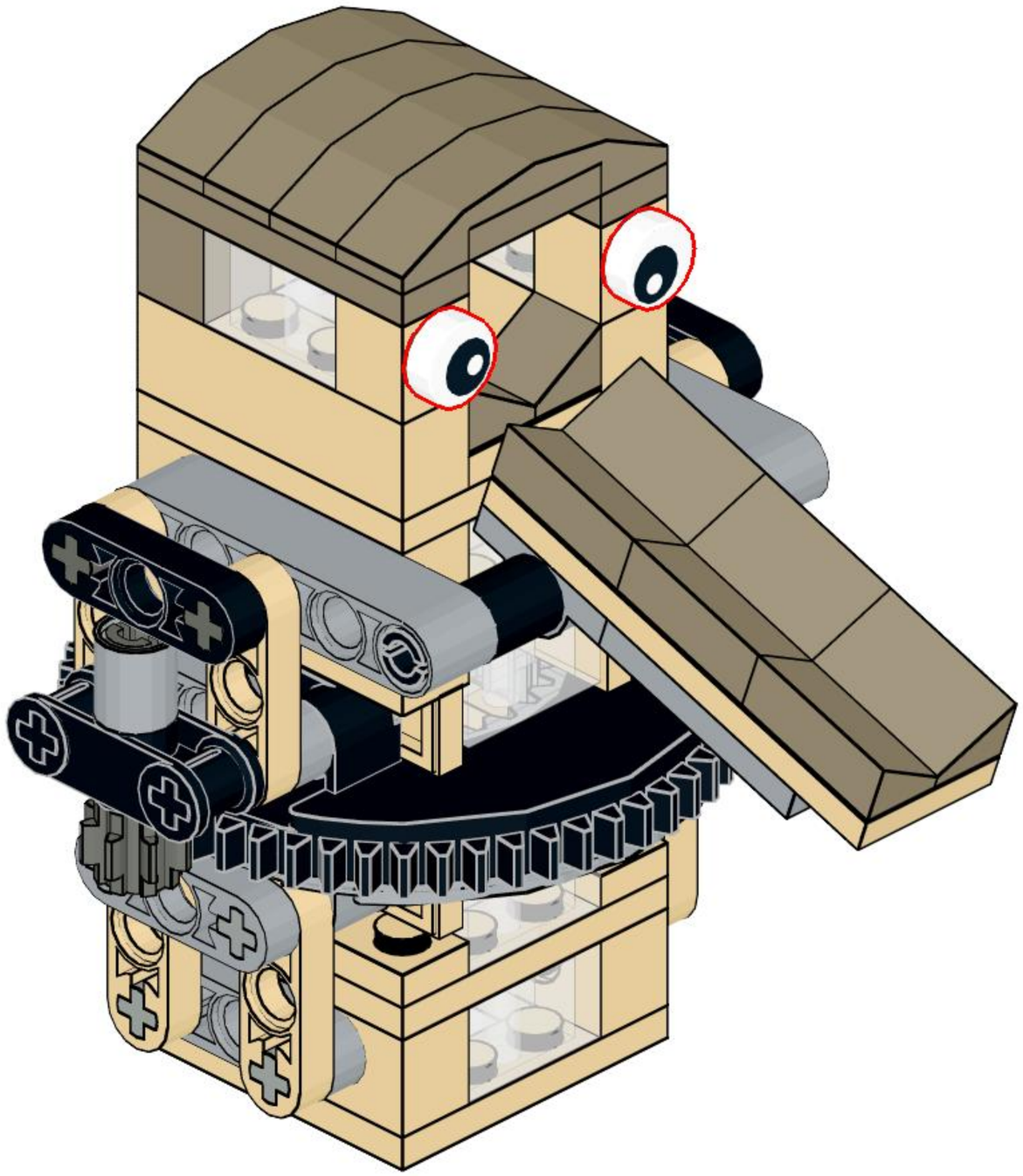

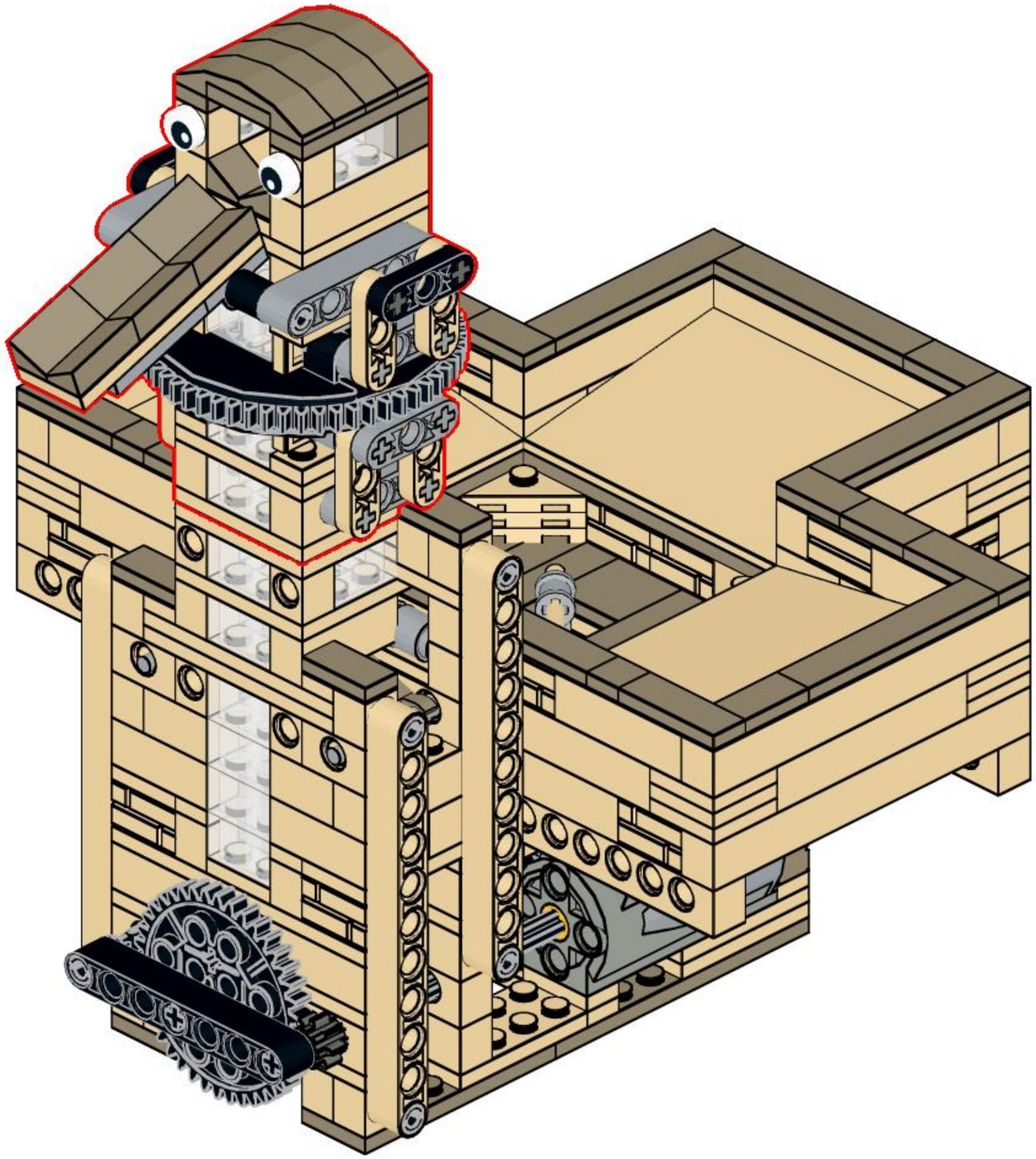

2x
18654, 11

13x
6558, 11

2x
2780, 11

1x
32524, 11

1x
3737, 11

2x
3705, 11

2x
6632, 11

2x
32072, 11

1x
3649, 11

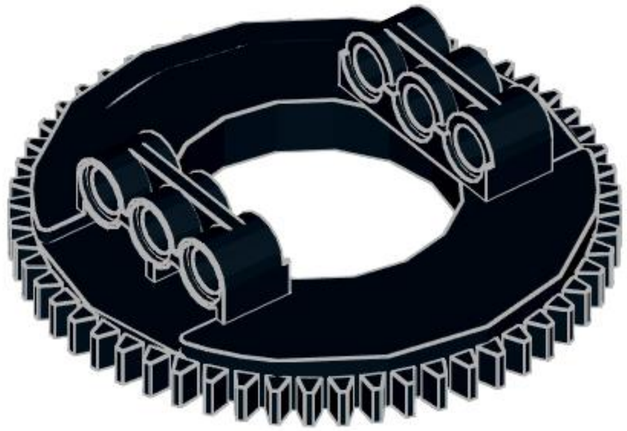

1x
48168, 11

1x
32184, 11

1x
3706, 11

2x
18651, 11

2x
10928, 85

5x
11214, 85

4x
6575, 85

10x
3749, 9

2x
4265c, 86

6x
4274, 86

1x
18654, 86

4x
3062b, 86

2x
3673, 86

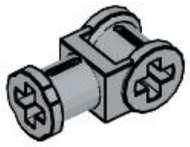

1x
32039, 86

1x
62462, 86

6x
6632, 86

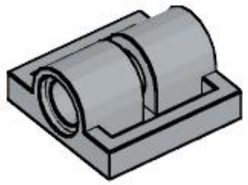

1x
2817, 86

1x
3021, 86

3x
30374, 86

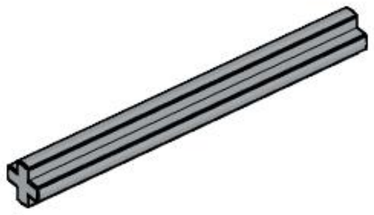

1x
32073, 86

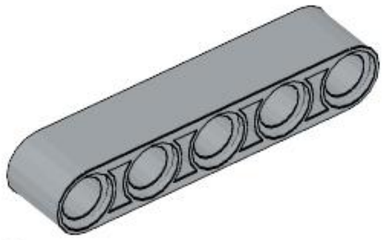

2x
32316, 86

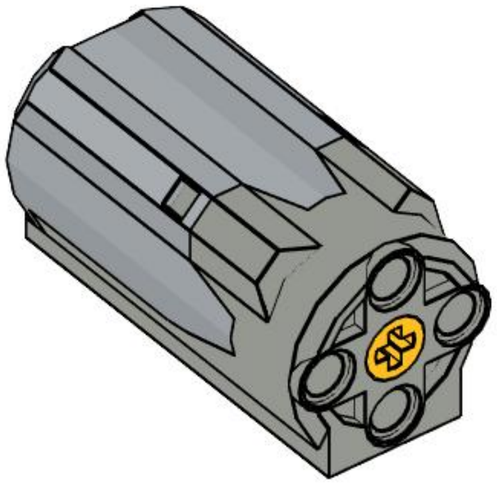

1x
58120c01, 86

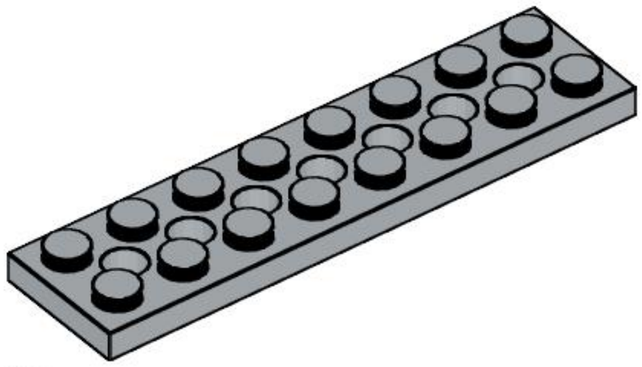

2x
3738, 86

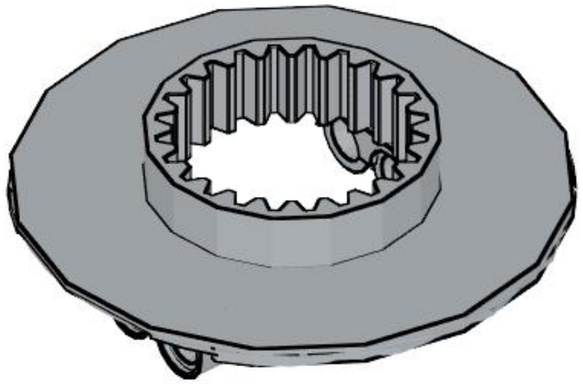

1x
48452, 86

2x
98138pb007, 1

2x
3070b, 69

2x
54200, 69

2x
3005, 69

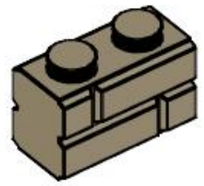

7x
98283, 69

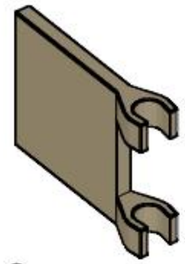

2x
2335, 69

11x
3069b, 69

2x
3068b, 69

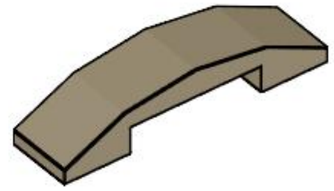

4x
93273, 69

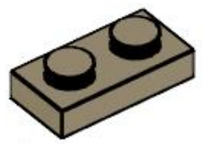

1x
3023, 69

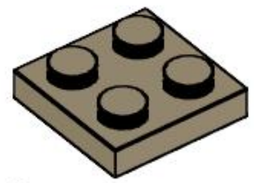

2x
3022, 69

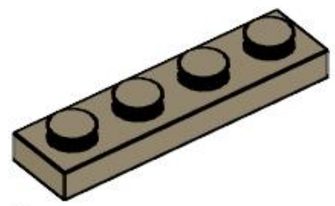

2x
3710, 69

6x
85984, 69

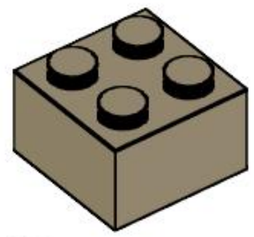

1x
3003, 69

1x
4865, 69

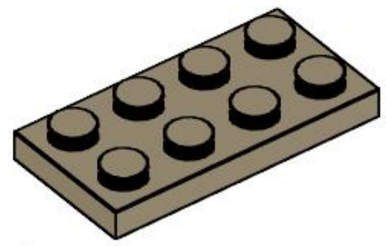

1x
3020, 69

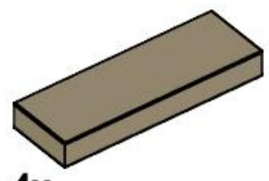

4x
63864, 69

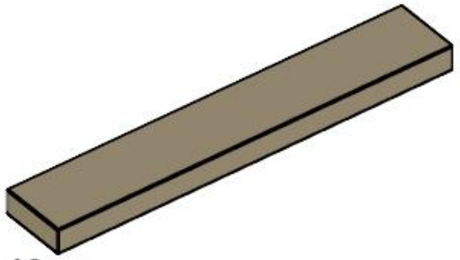

13x
6636, 69

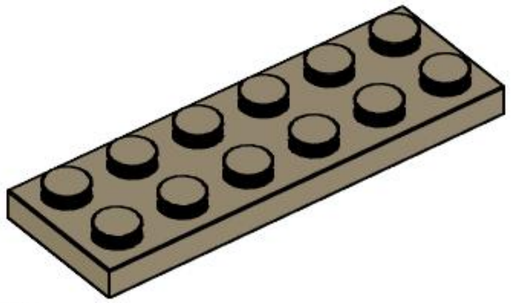

2x
3795, 69

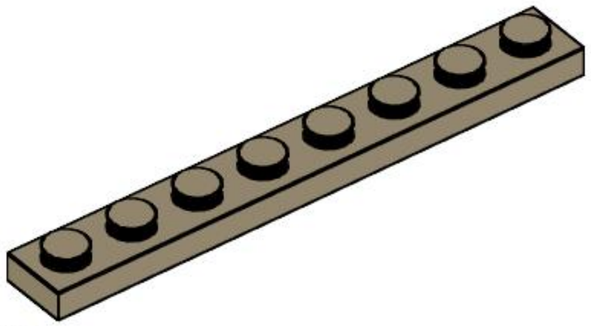

3x
3460, 69

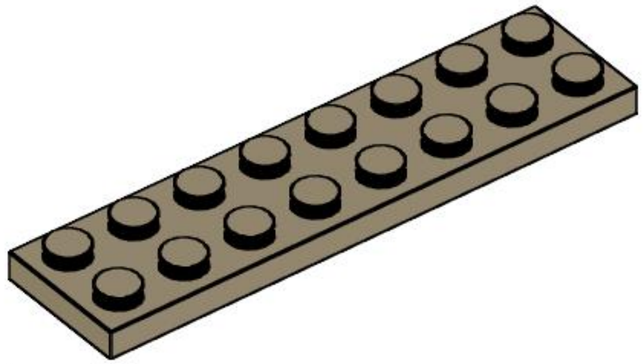

2x
3034, 69

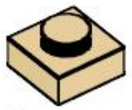

2x
3024, 2

22x
6541, 2

4x
3069b, 2

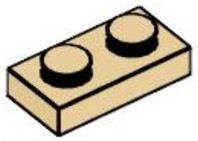

18x
3023, 2

2x
11477, 2

2x
85984, 2

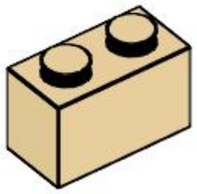

23x
3004, 2

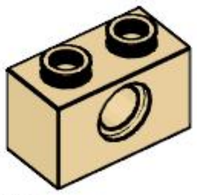

8x
3700, 2

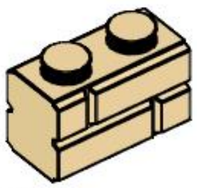

20x
98283, 2

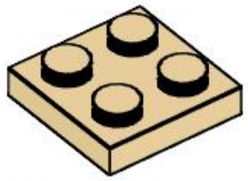

17x
3022, 2

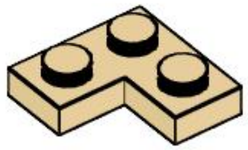

6x
2420, 2

8x
6632, 2

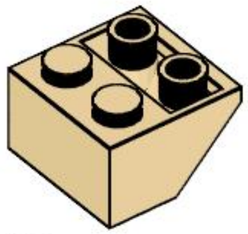

1x
3660, 2

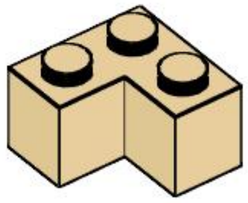

6x
2357, 2

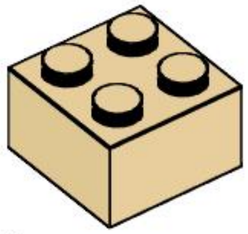

3x
3003, 2

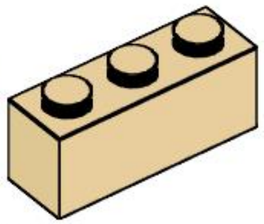

14x
3622, 2

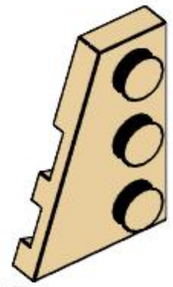

3x
43723, 2

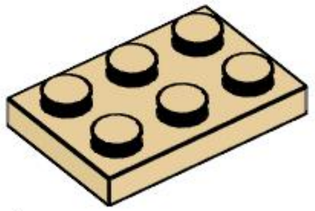

4x
3021, 2

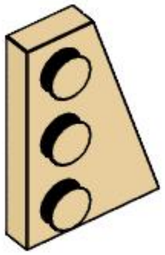

3x
43722, 2

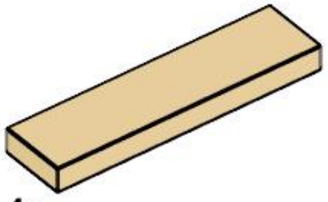

4x
2431, 2

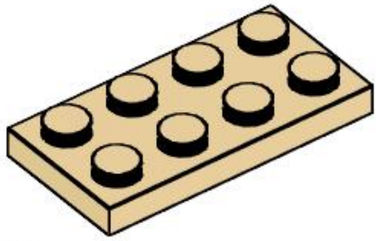

7x
3020, 2

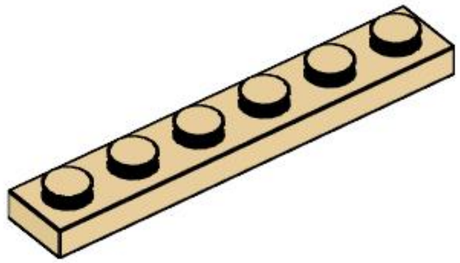

2x
3666, 2

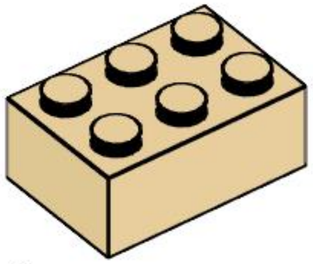

6x
3002, 2

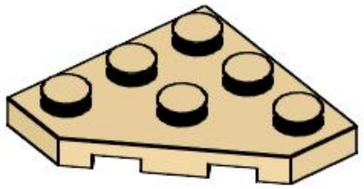

6x
2450, 2

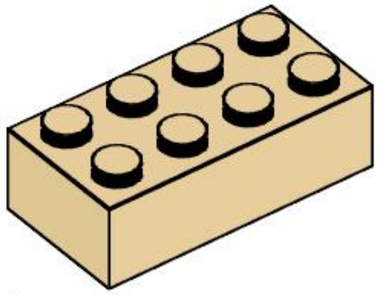

3x
3001, 2

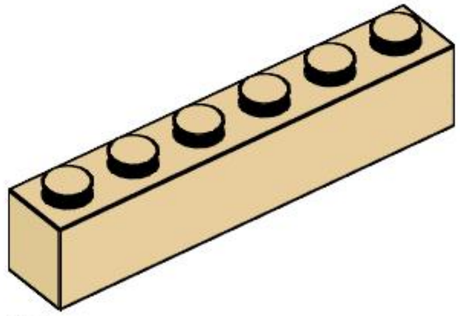

6x
3009, 2

1x
30374, 2

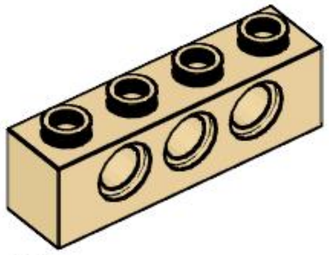

10x
3701, 2

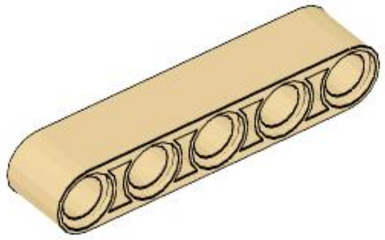

2x
32316, 2

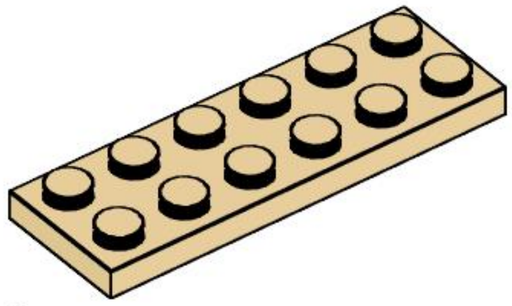

1x
3795, 2

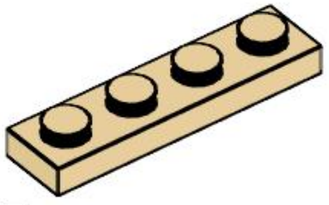

7x
3710, 2

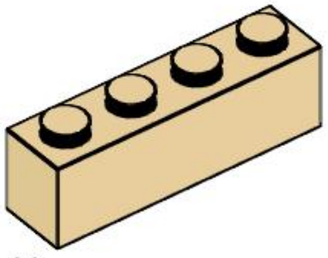

10x
3010, 2

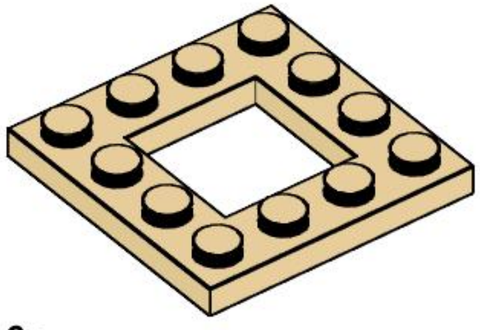

6x
64799, 2

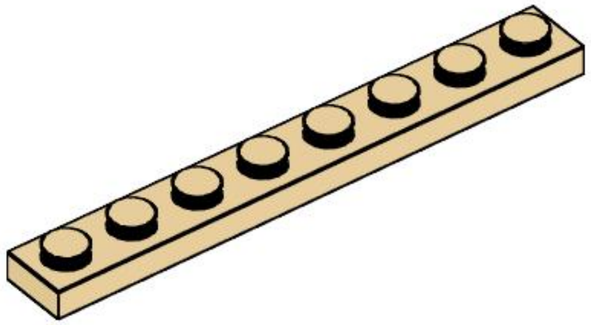

9x
3460, 2

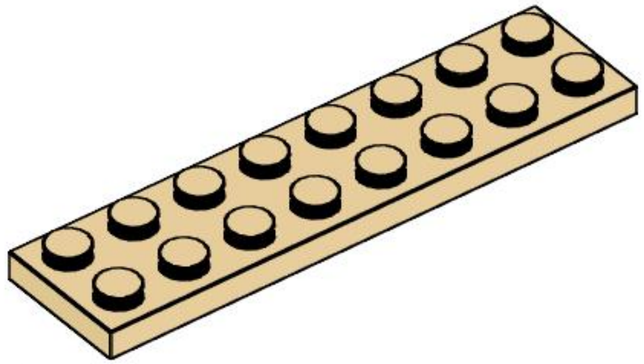

5x
3034, 2

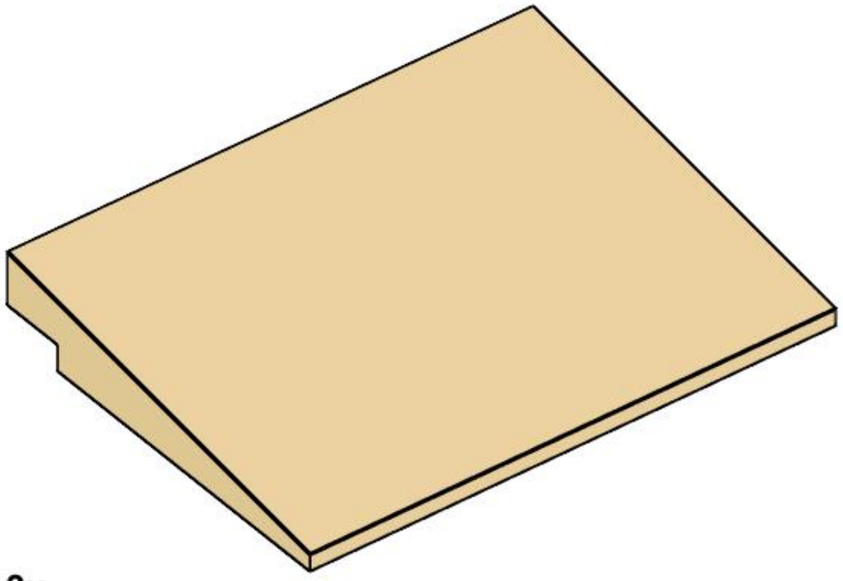

3x
4515, 2

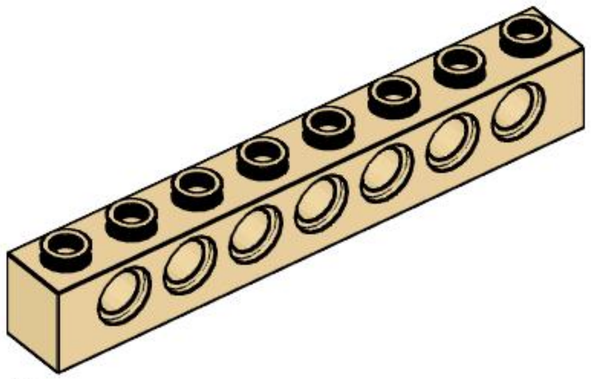

5x
3702, 2

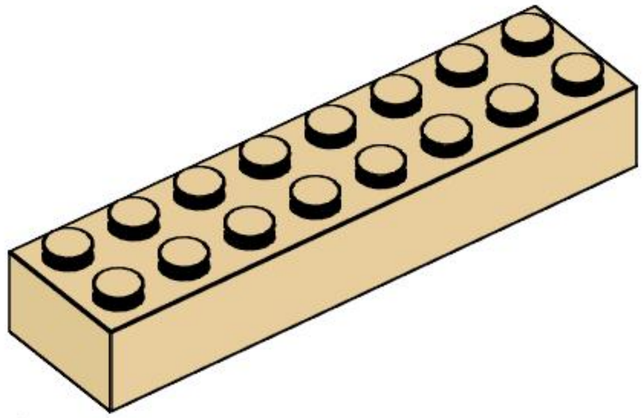

1x
3007, 2

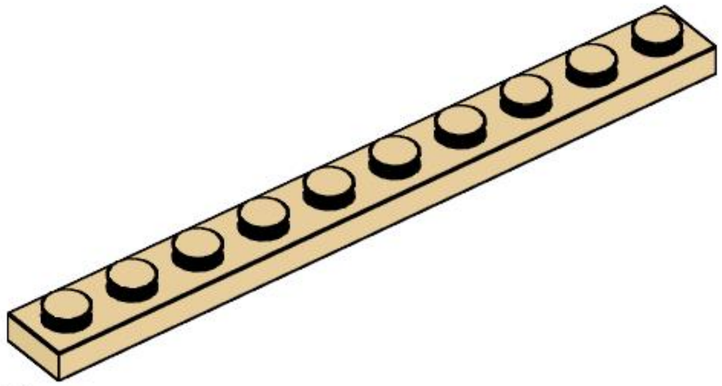

2x
4477, 2

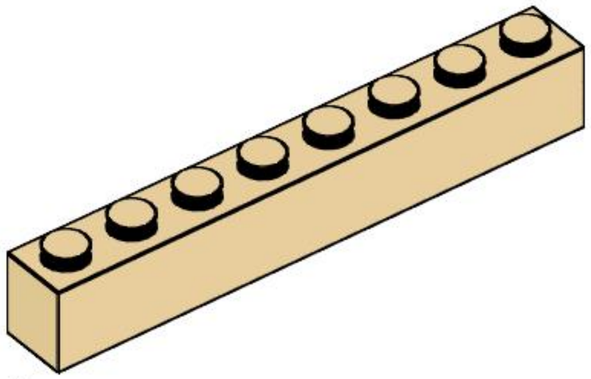

4x
3008, 2

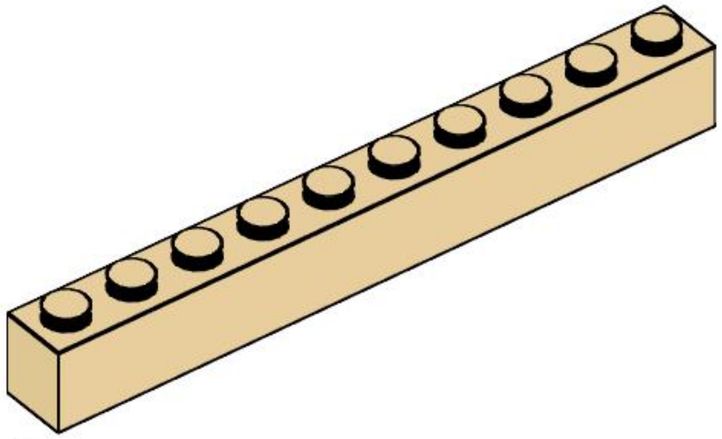

5x
6111, 2

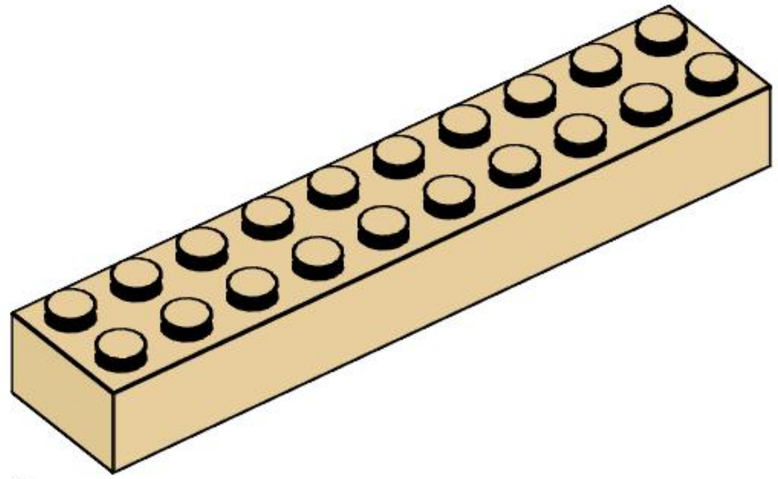

1x
3006, 2

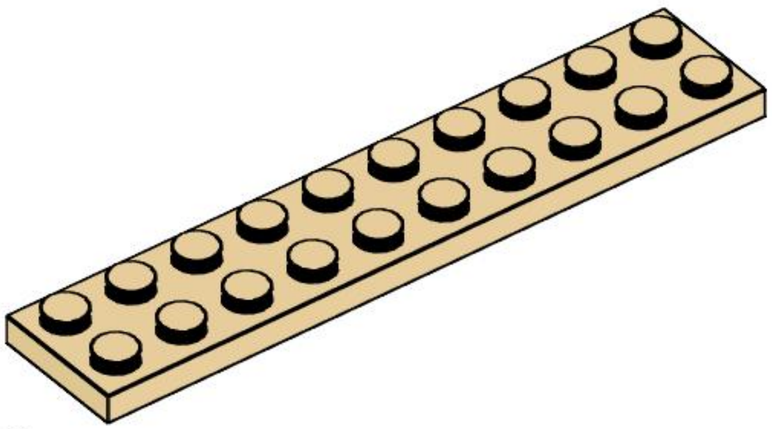

2x
3832, 2

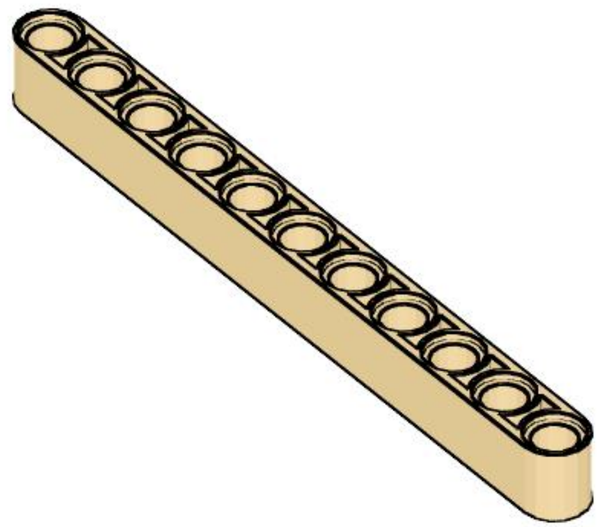

4x
32525, 2

19x
3004, 12