INDUSTRIAL BUCKET

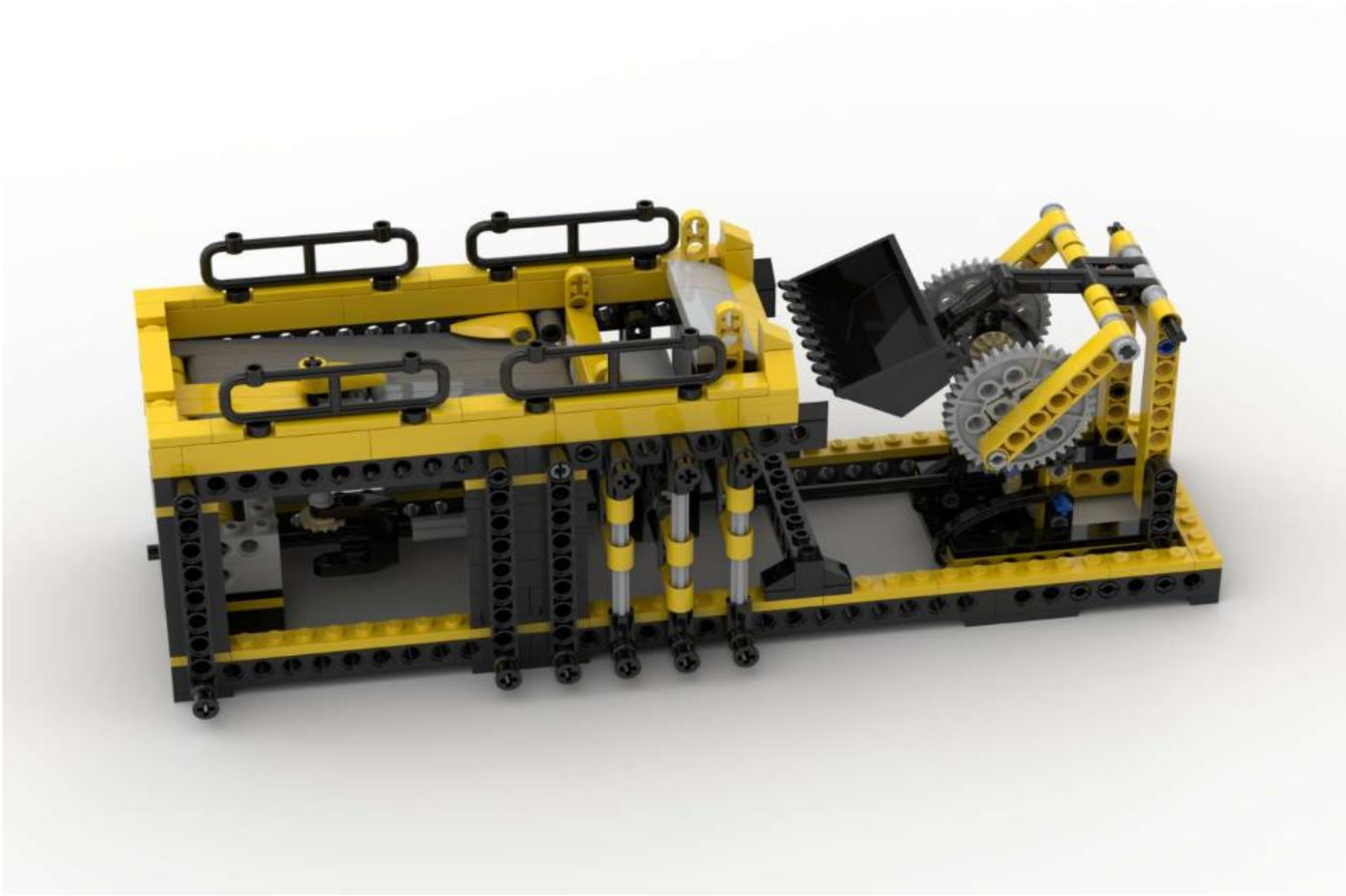

Built by
Ryk Field
2018

Version 1.1

REF01

The "Industrial Bucket" GBC is heavily influenced by the designs of two other GBC builders.

The input stepping mechanism is - i'm told - originally an Akiyuki design.

The bucket mechanism is derived from a Philippe "Philo" Hurbain design from 2005, known as the "Shovel."

Wanting to make a bucket GBC, but not having either the motor or shovel used in Philo's design, I built this new design to suit the parts I had available.

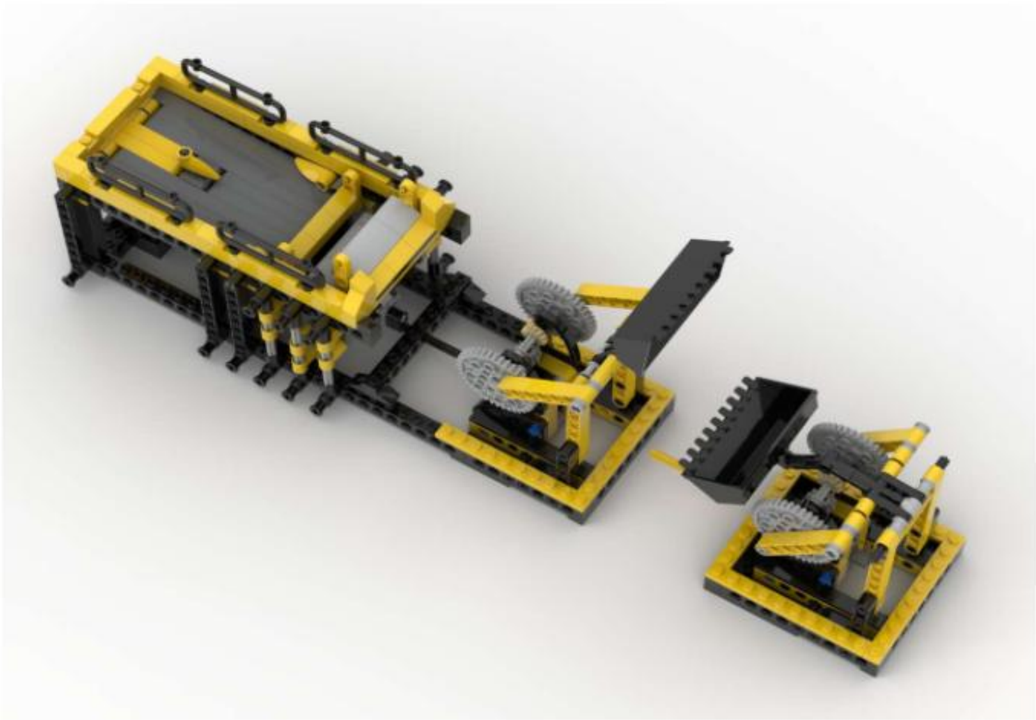

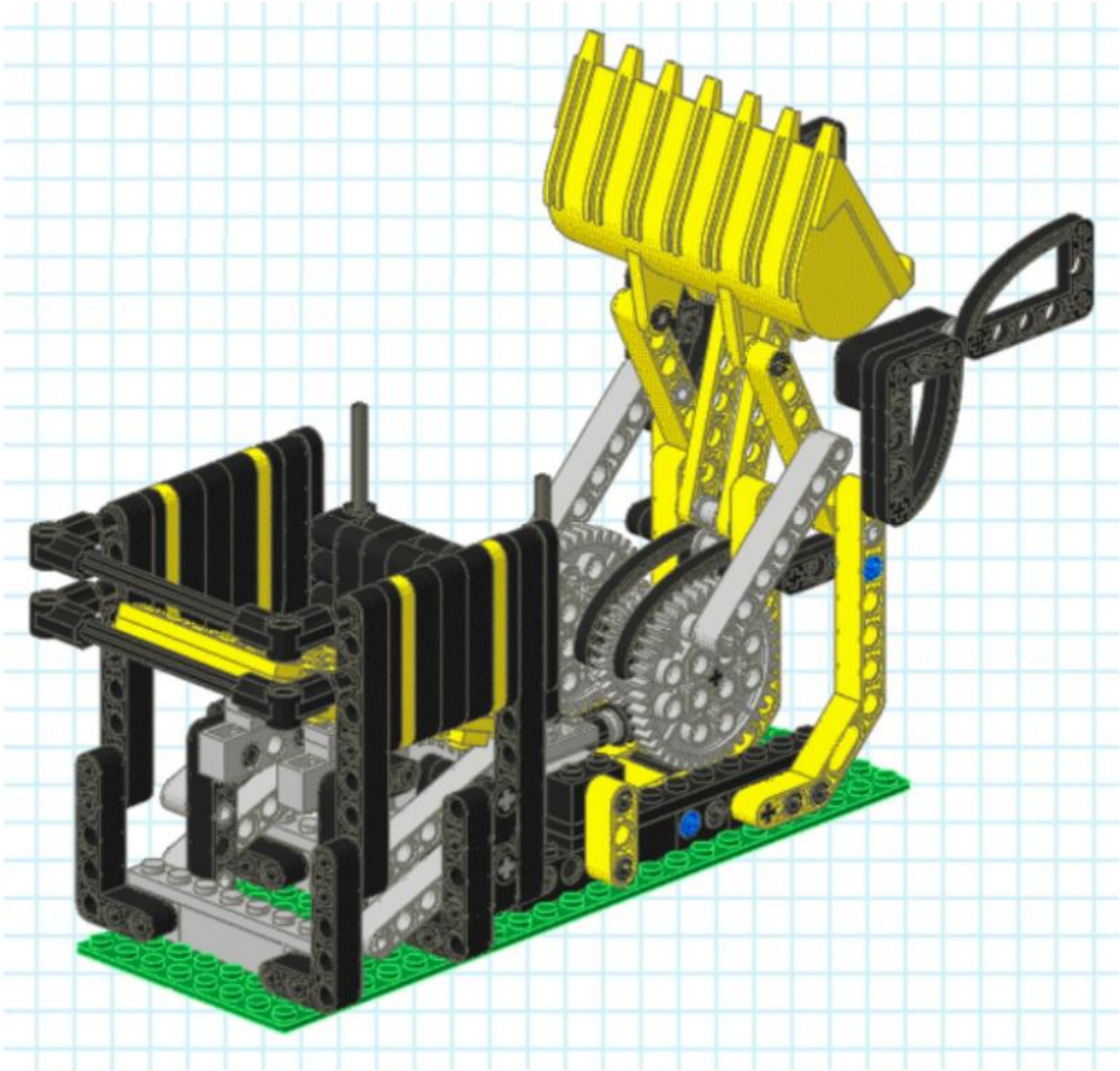

Philo "Shovel" (2005)

Design Notes

This GBC has been designed to operate as a stand-alone module, driven by an "M" motor.

The use of a central drive shaft enables the module to be configured and used with a few variations. Additional "Extension Buckets" (shown previous page) can be attached to allow bucket-to-bucket passing of balls.

The "M" motor and drive assembly can be removed and replaced by an "XL" motor and drive assembly. The XL motor provides sufficient power to drive multiple "Extension Buckets" or unpowered modules, all connected by axles. In personal testing I have had one "XL" module comfortably driving four unpowered modules (two before, two after.)

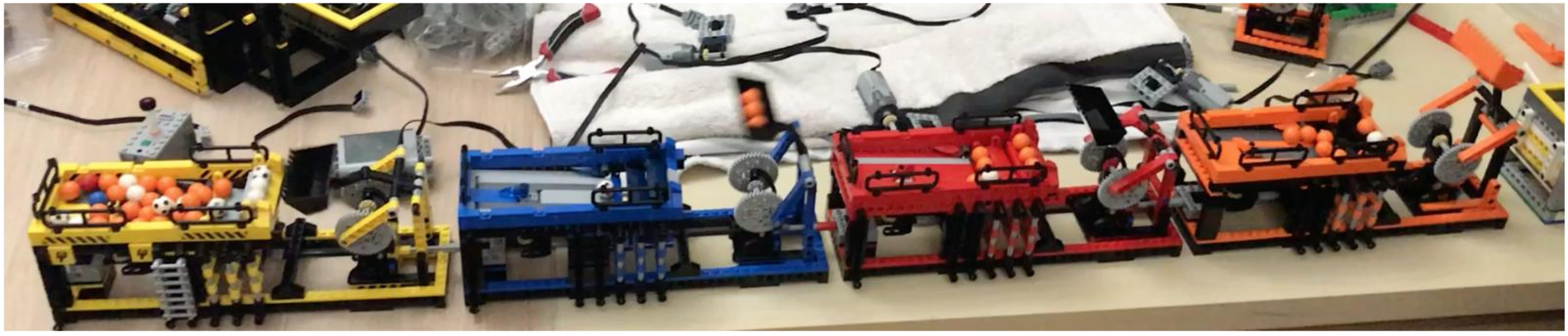

Three unpowered GBC modules (yellow, red, orange) being driven by the "XL" drive unit fitted to the blue GBC module.

1

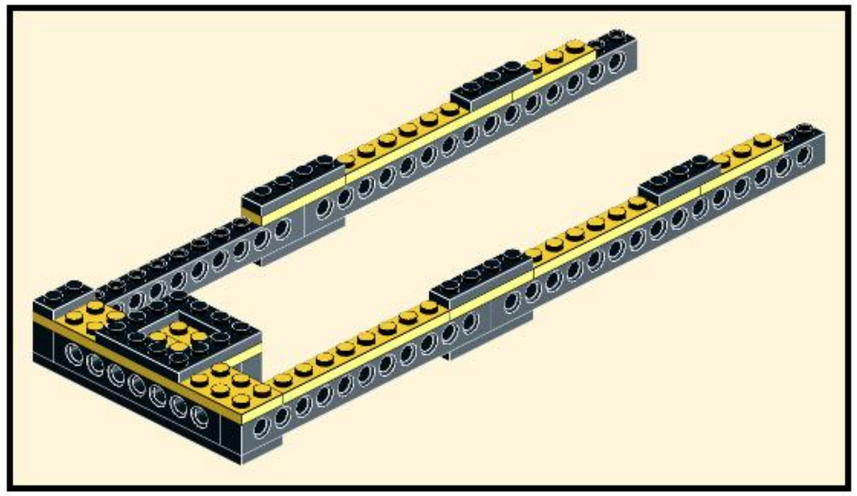

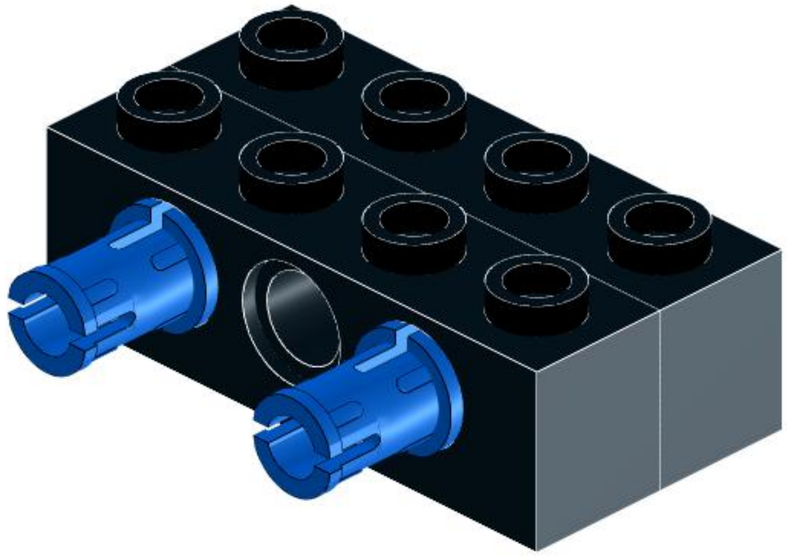

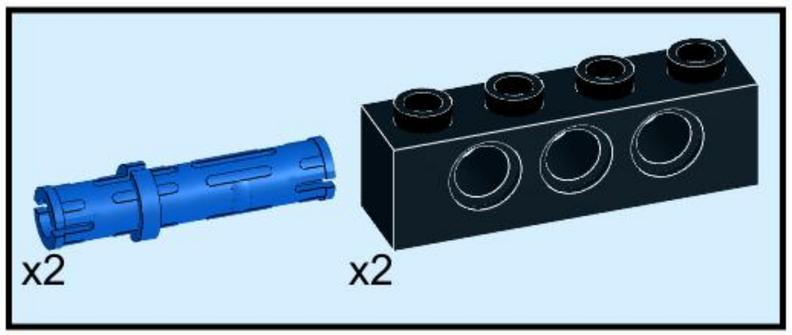

2

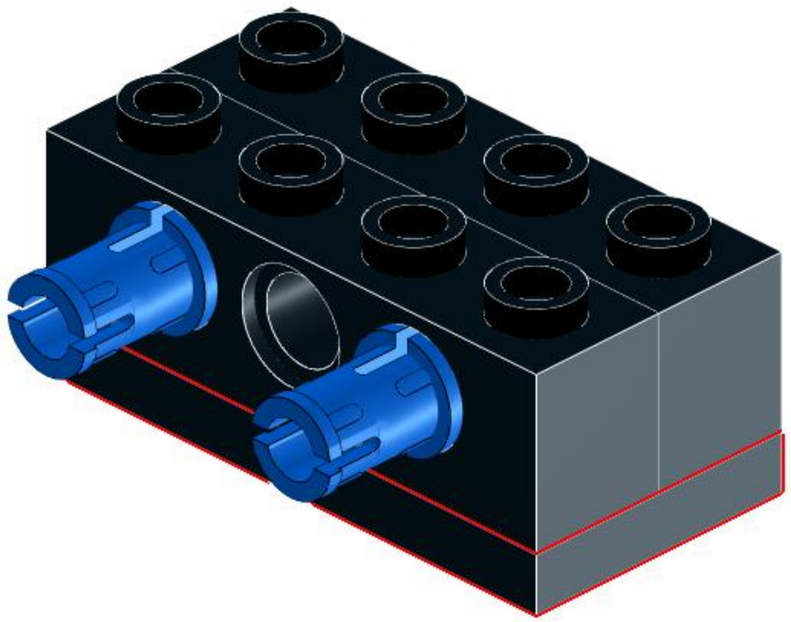

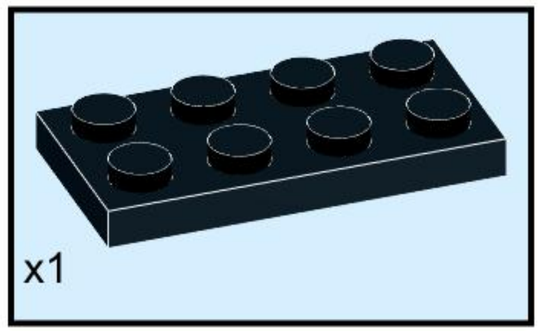

3

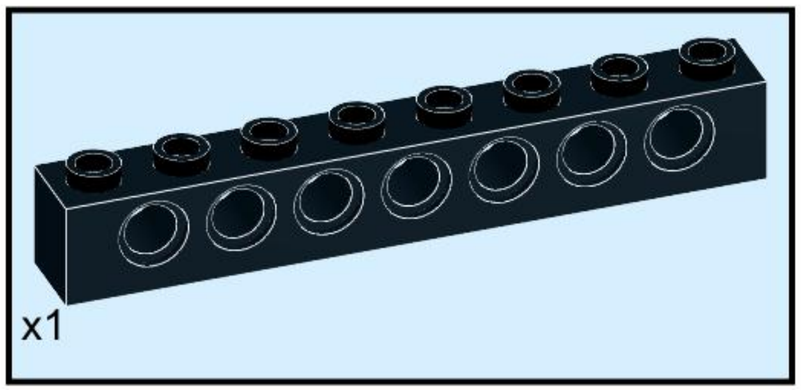

4

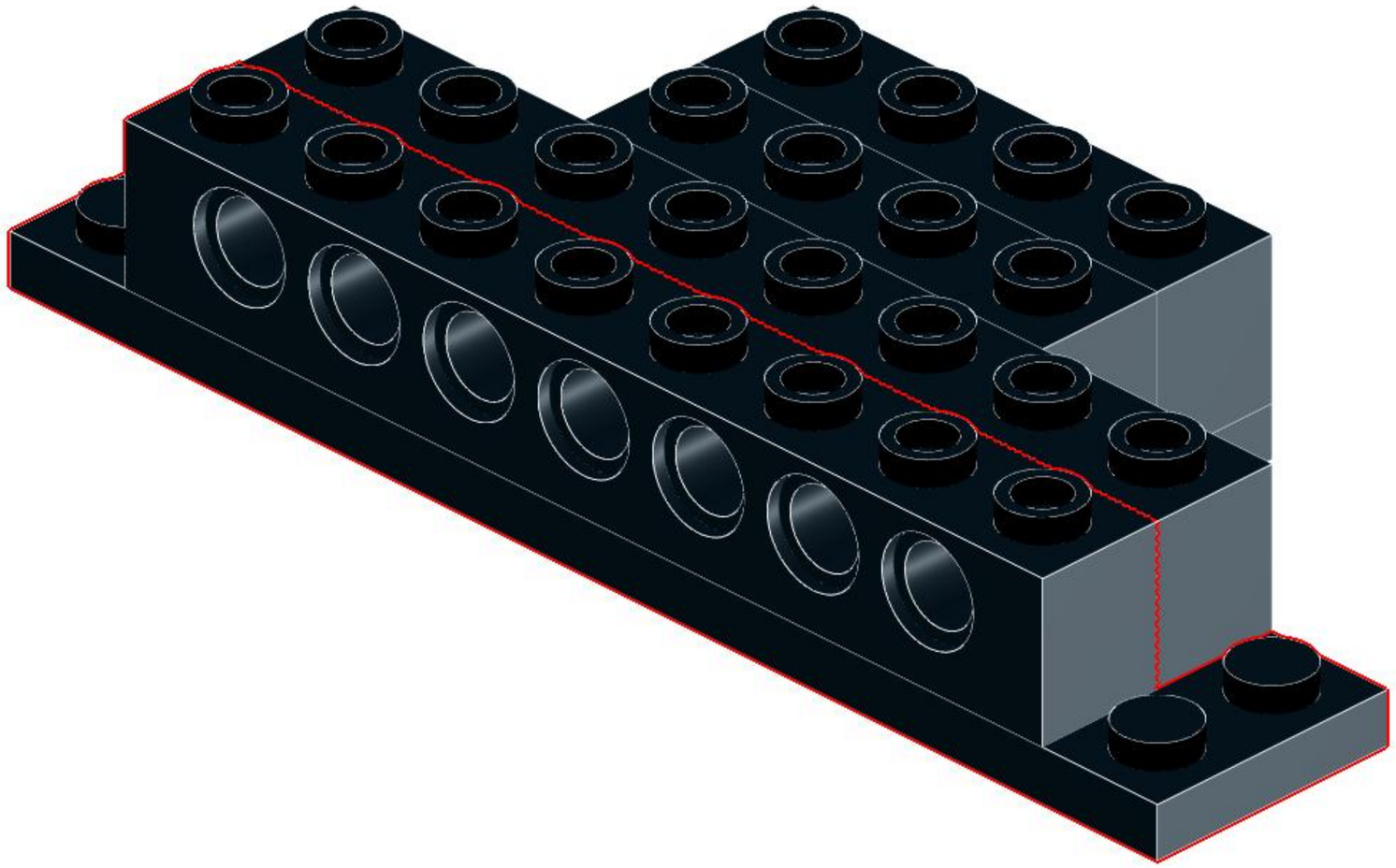

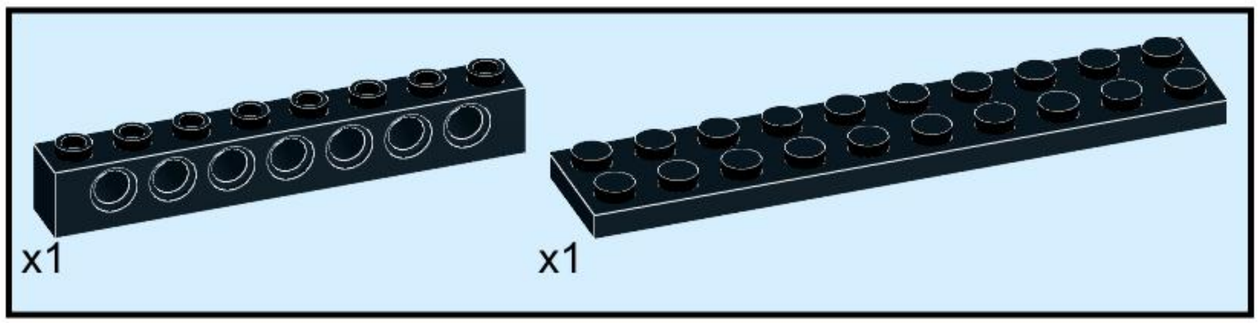

5

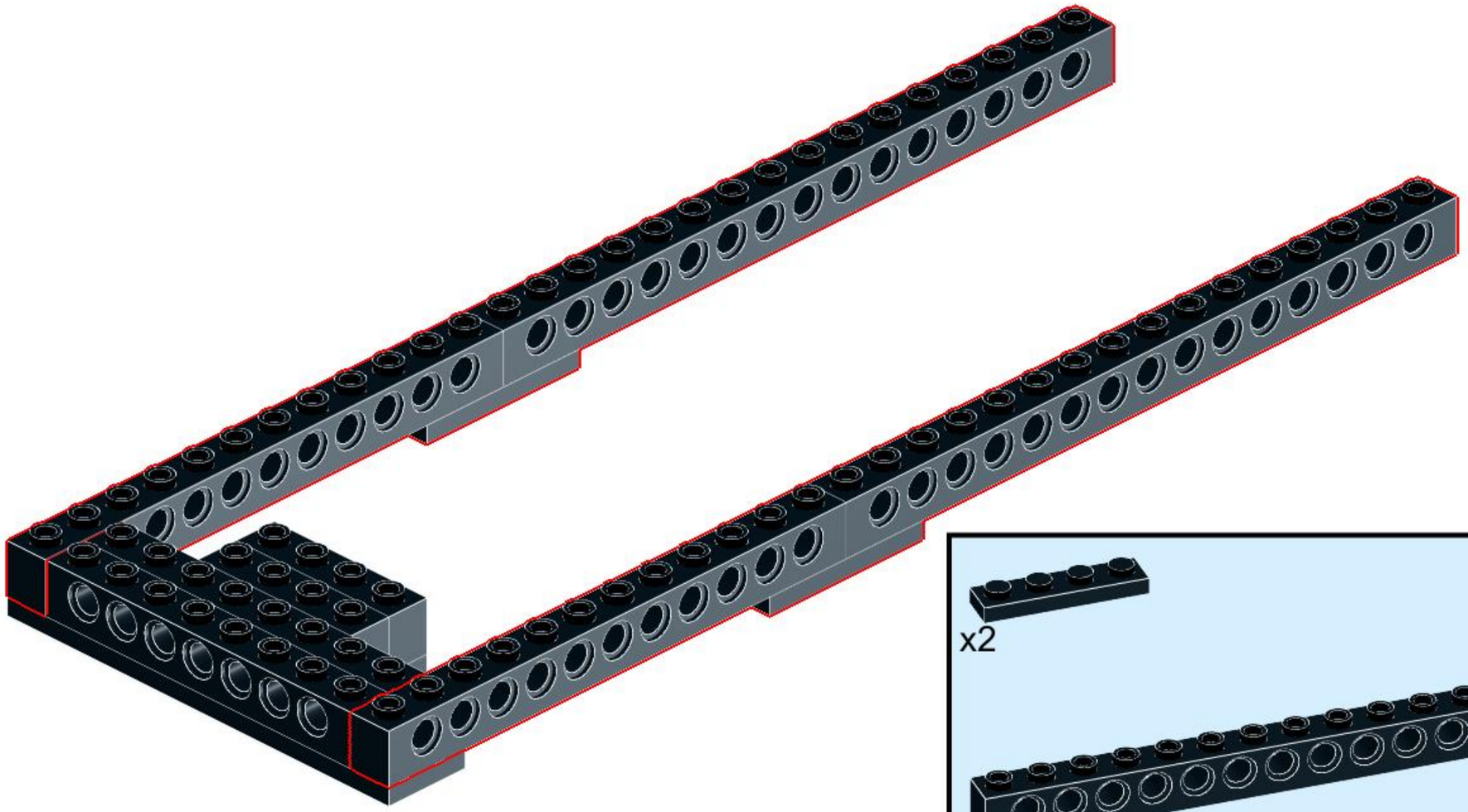

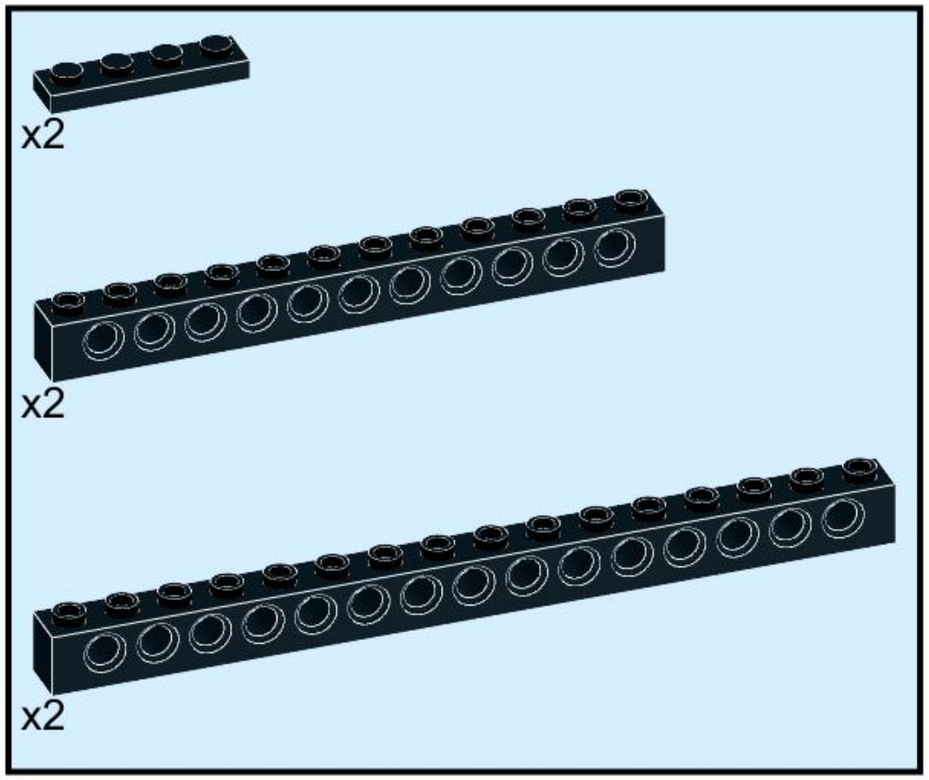

6

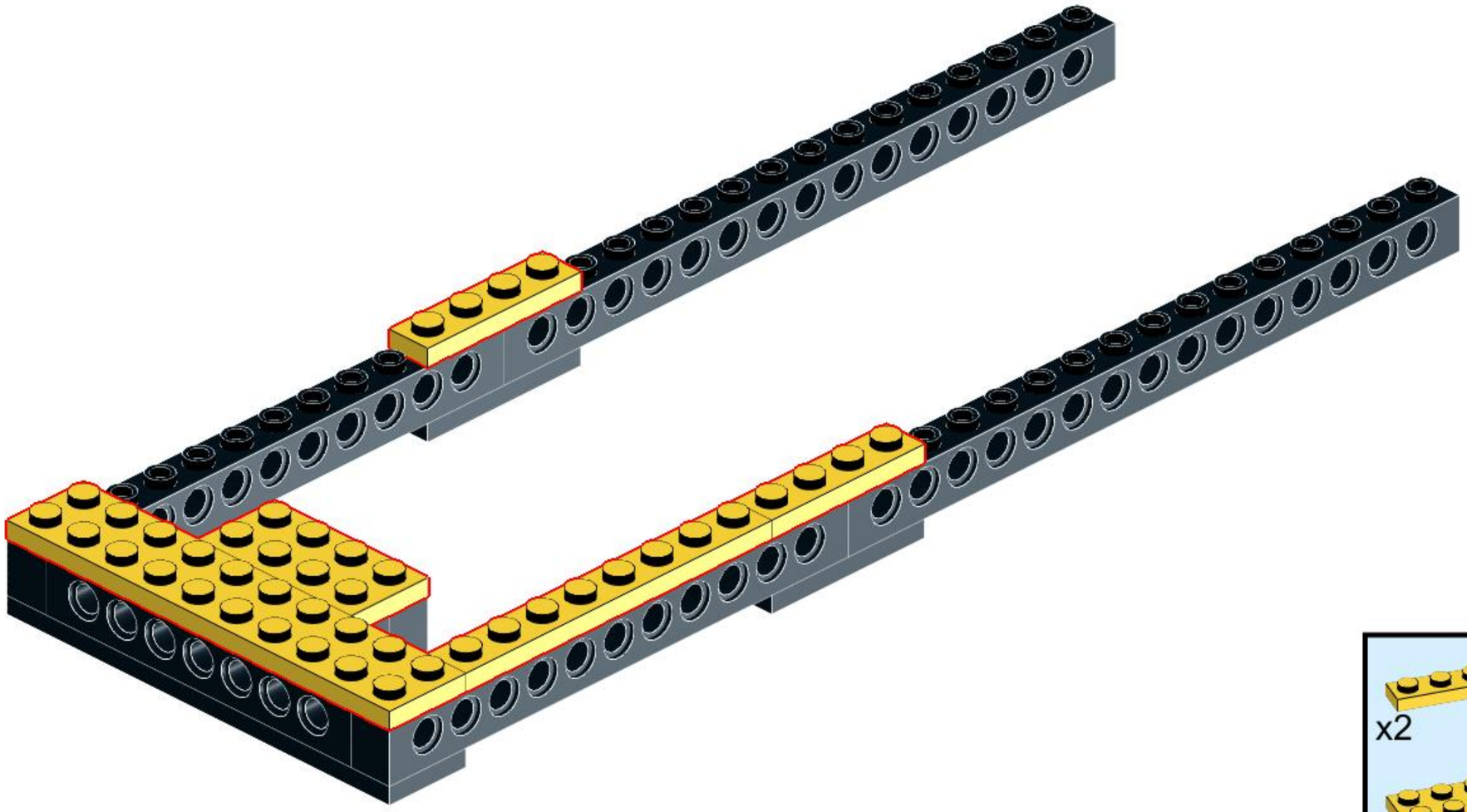

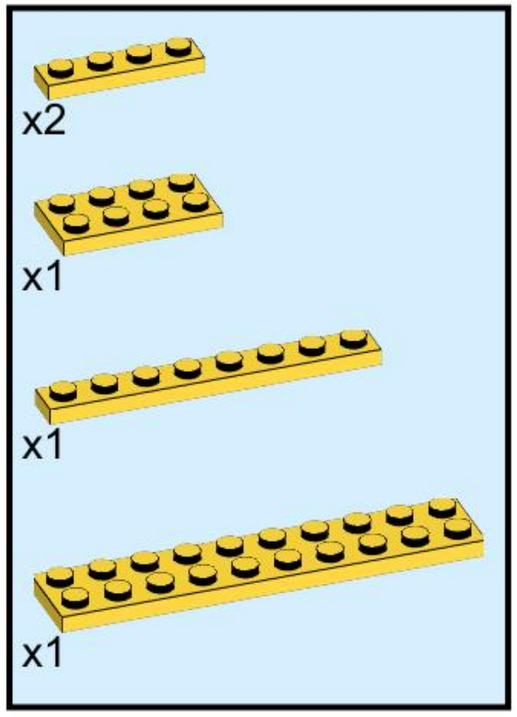

7

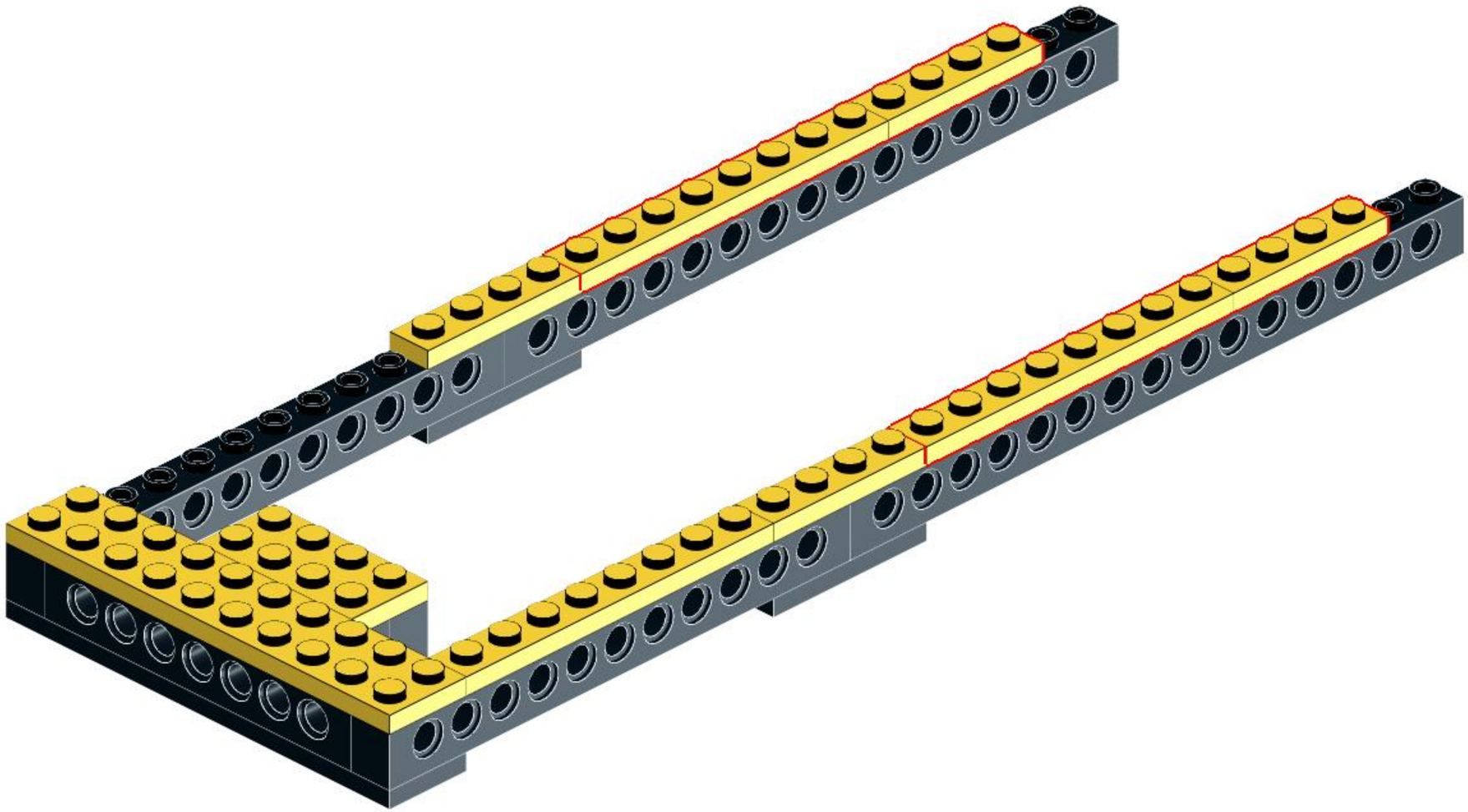

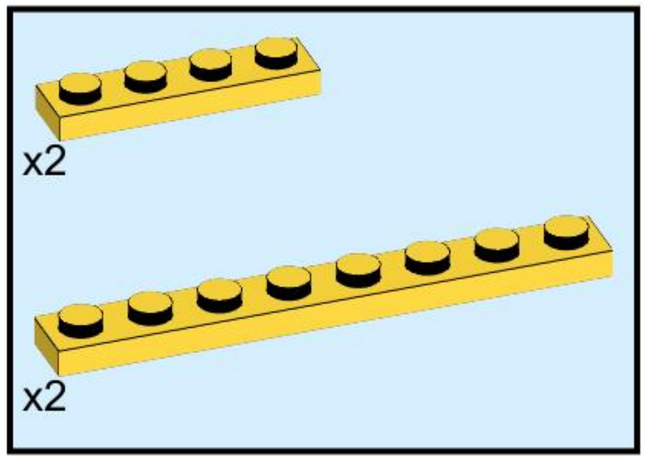

8

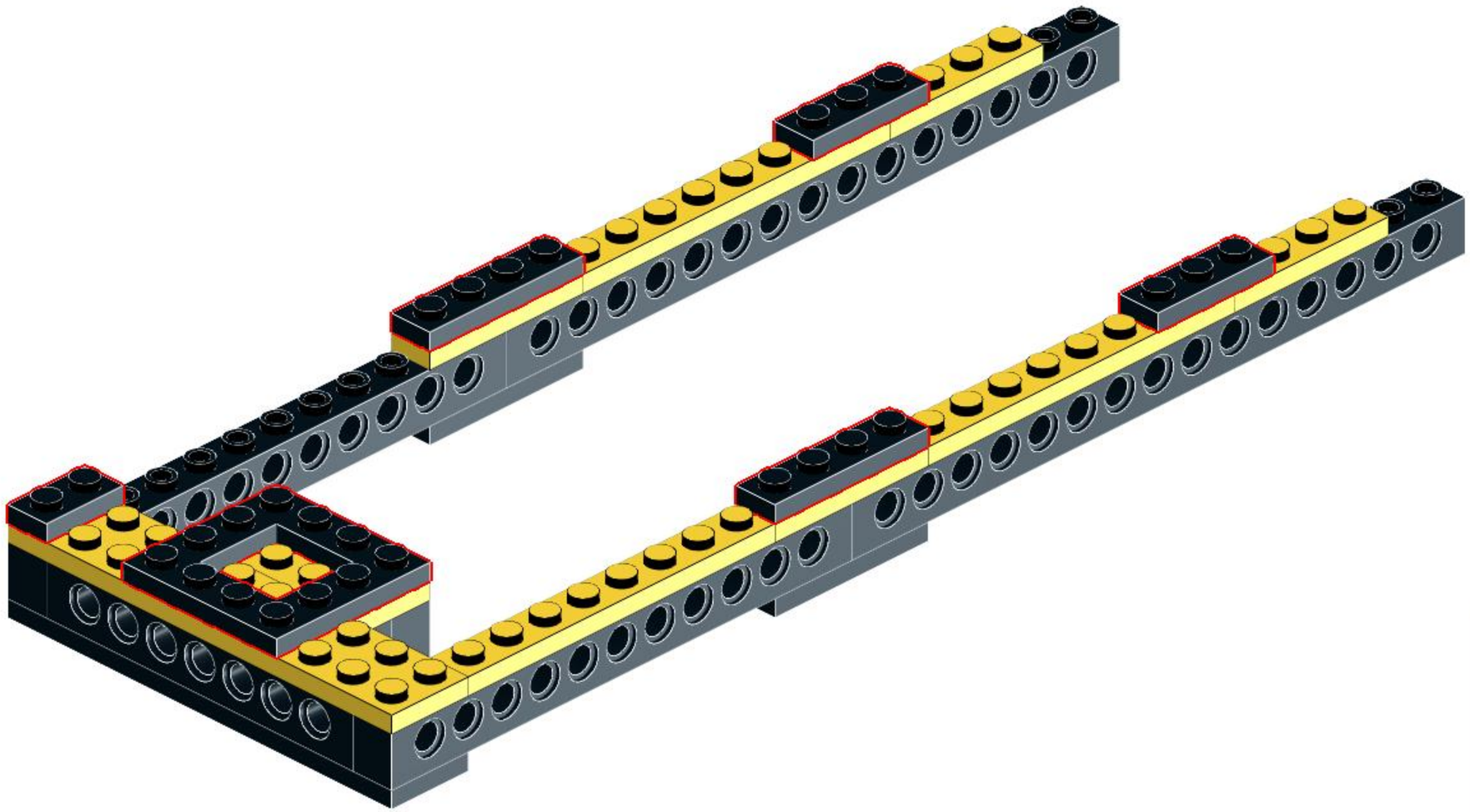

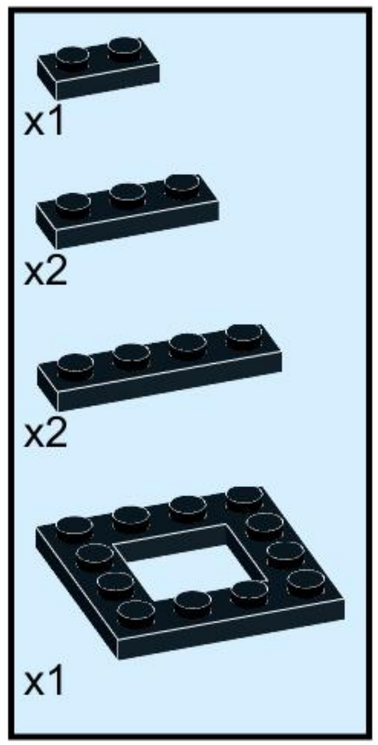

9

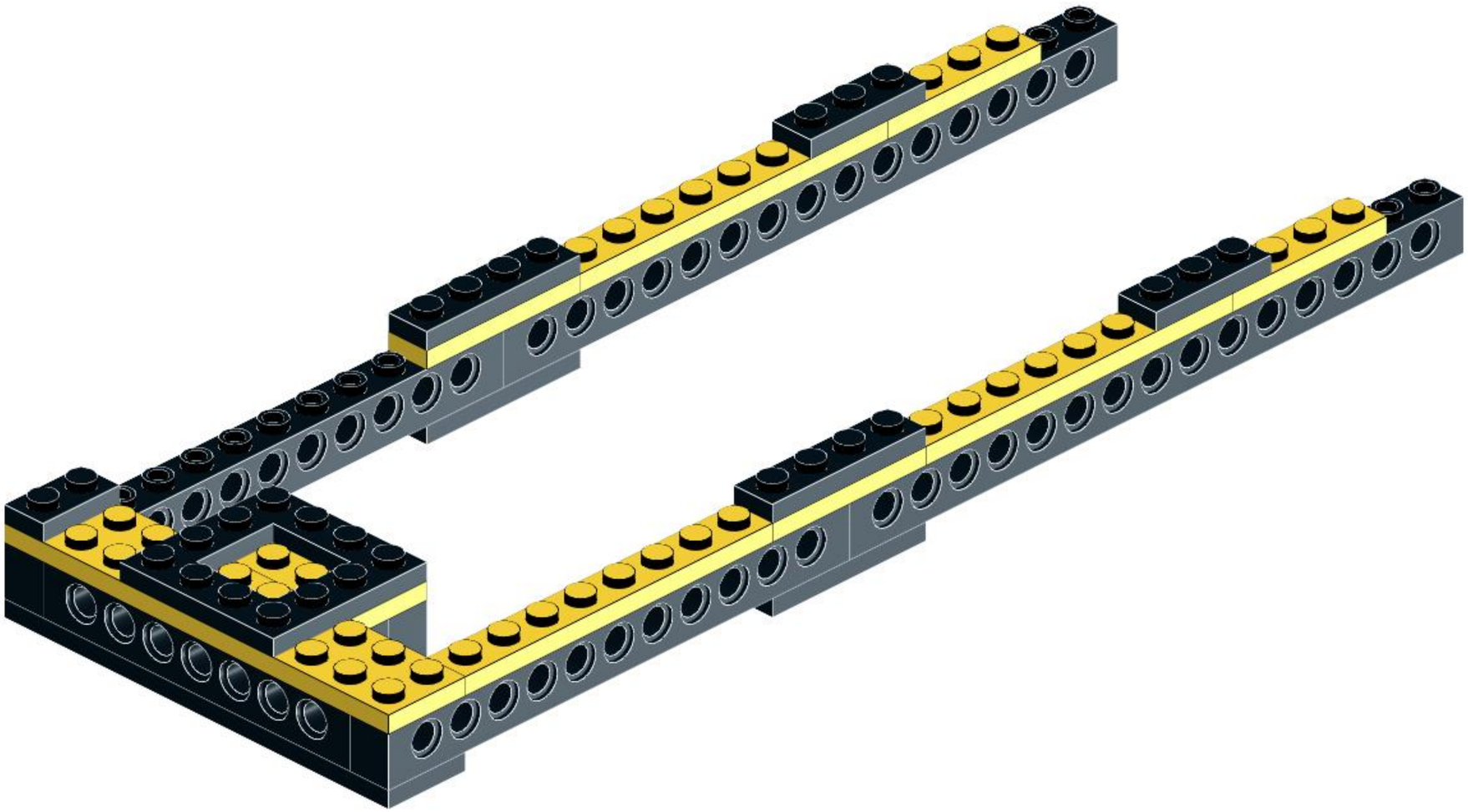

10

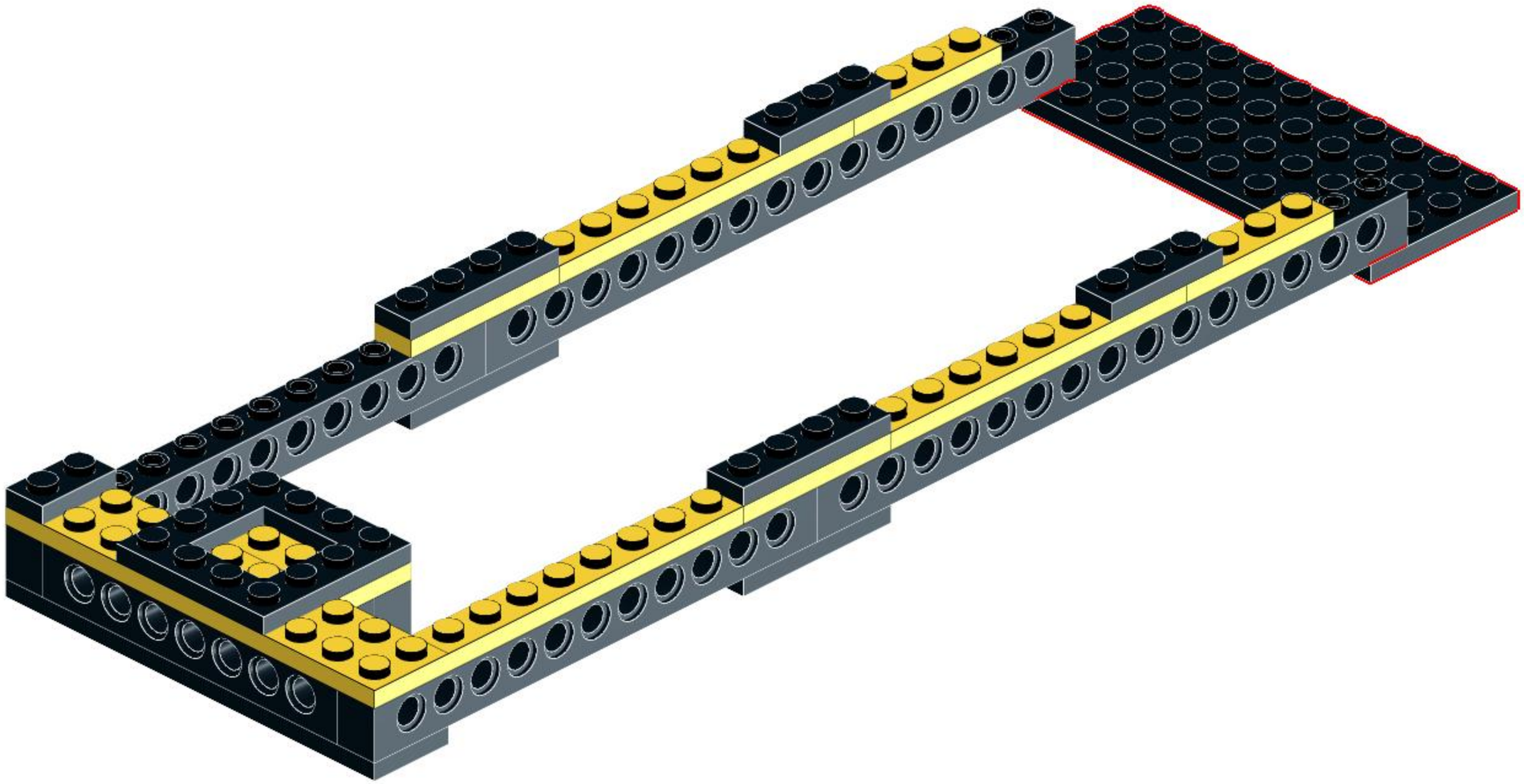

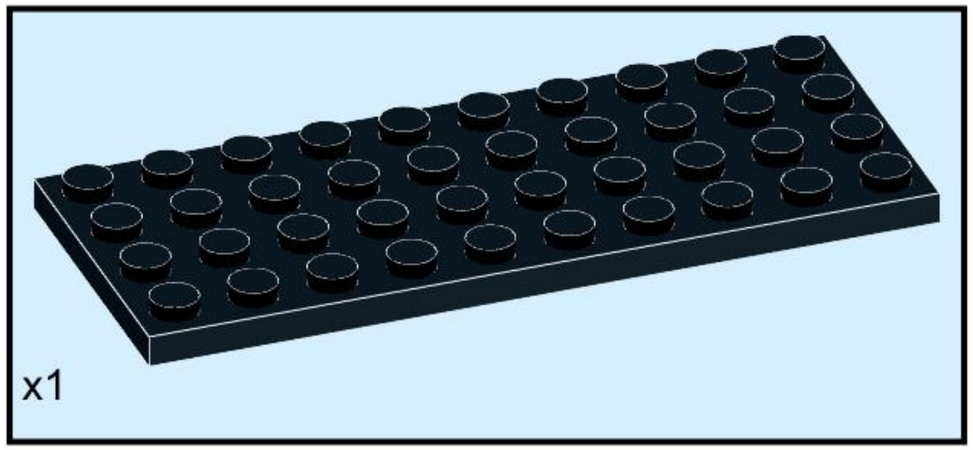

11

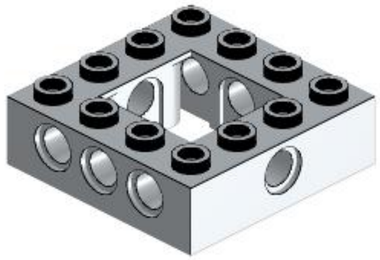

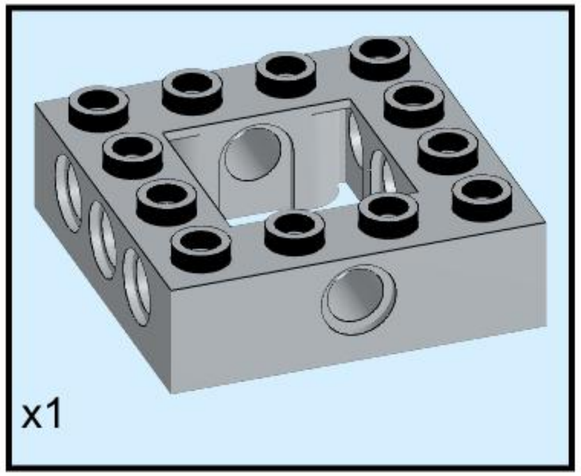

12

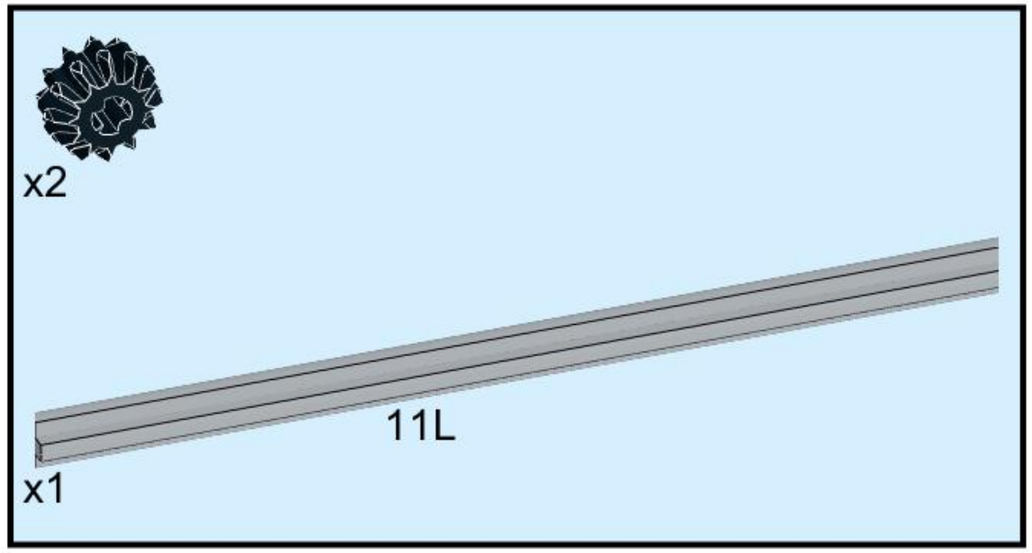

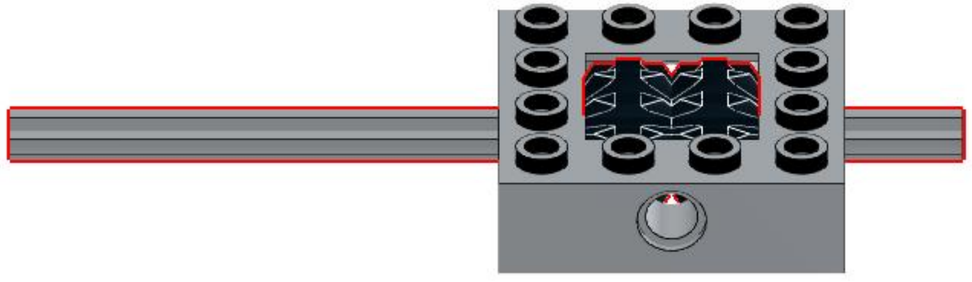

Axle should protrude by 1L to 1.5L
for (optional) connection to
additional modules.

13

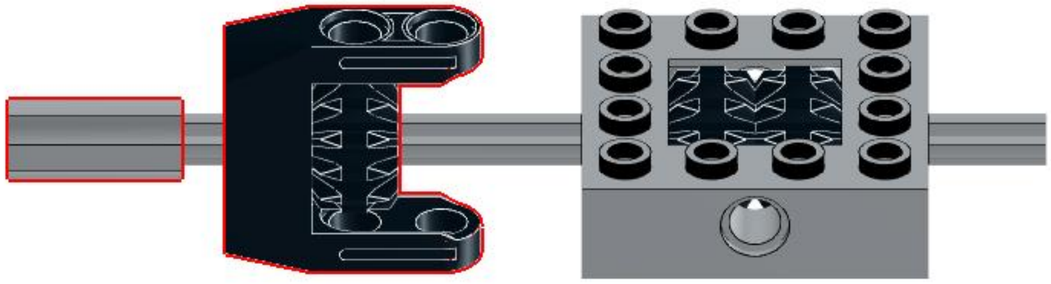

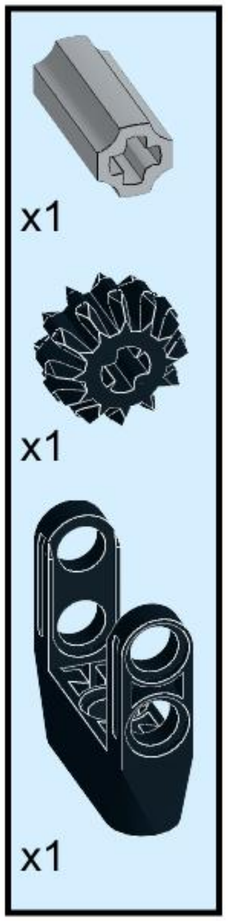

14

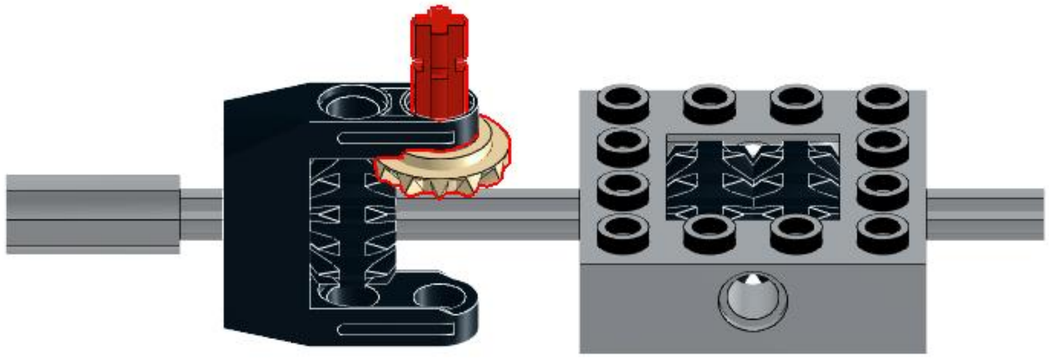

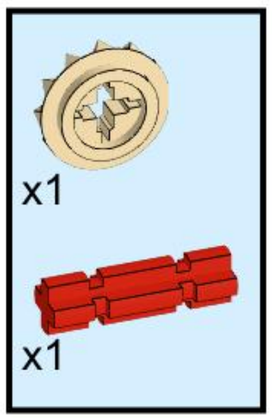

15

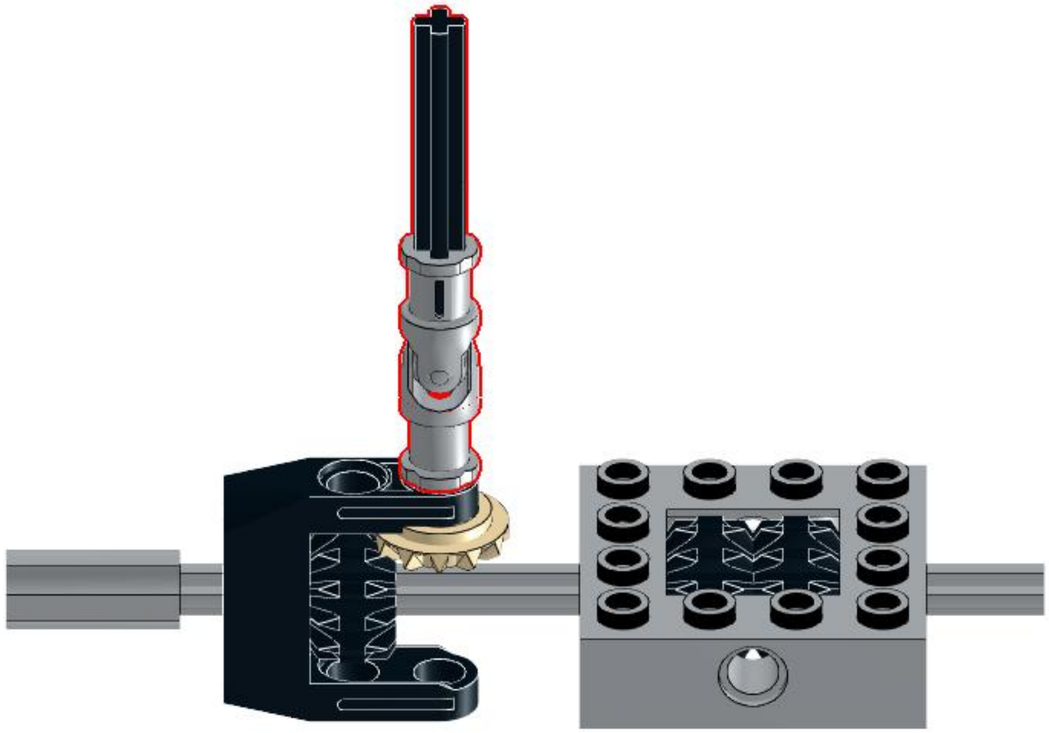

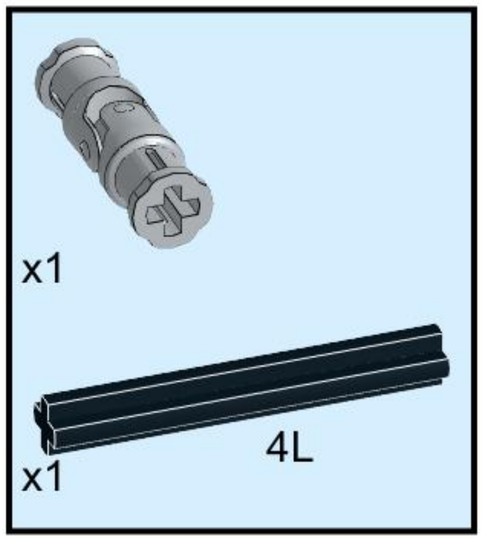

16

Building and Installing the correct Motor Drive Unit

The next several pages will provide instructions detailing how to assemble and install the "M" motor drive unit sub-assembly, which is used to power the the normal, stand-alone GBC. Proceed to the next page to build this drive unit.

If you are building an unpowered module which will be driven by a seperate module fitted with an "XL" motor drive unit, skip over these steps and continue on the page marked "Resume Here."

If you intend to install an "XL" motor drive unit which can be used to drive this GBC as well as several connected, unpowered modules, skip over these steps, continuing on the page marked "Resume Here." Once you have completed these instructions, you will then need to follow the seperate instructions to build and install the "XL" motor drive unit.

"M" Motor Drive Unit

"XL" Motor Drive Unit

17

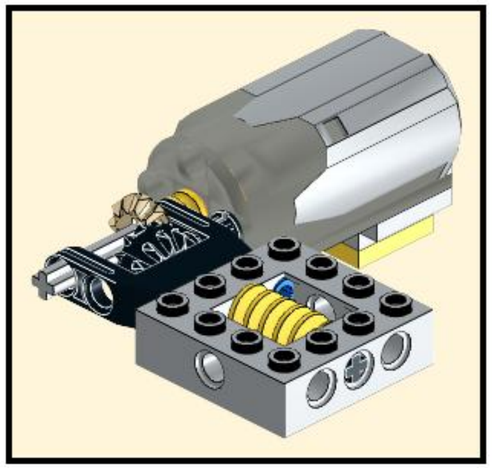

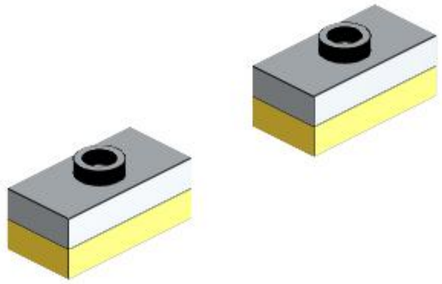

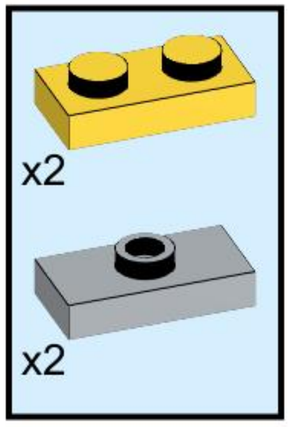

18

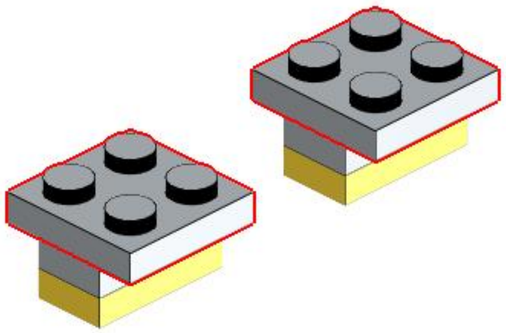

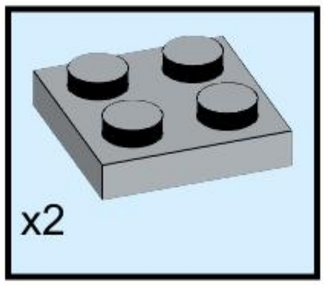

19

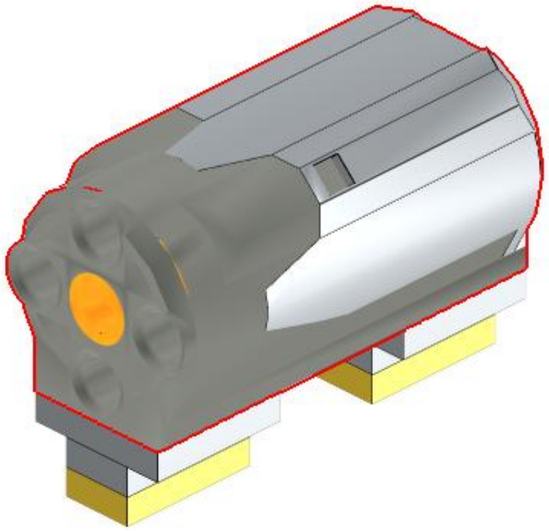

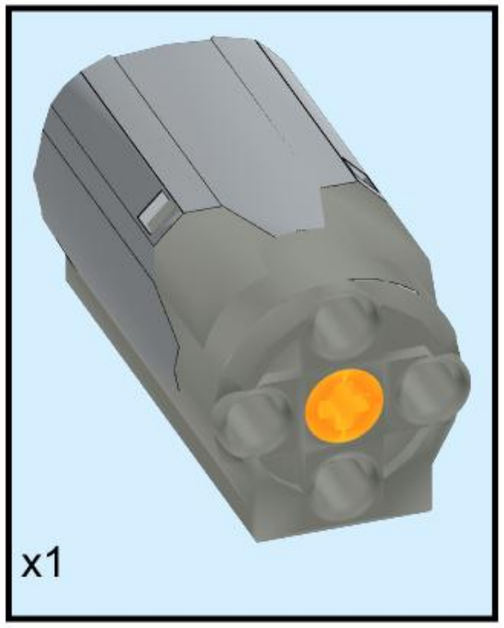

20

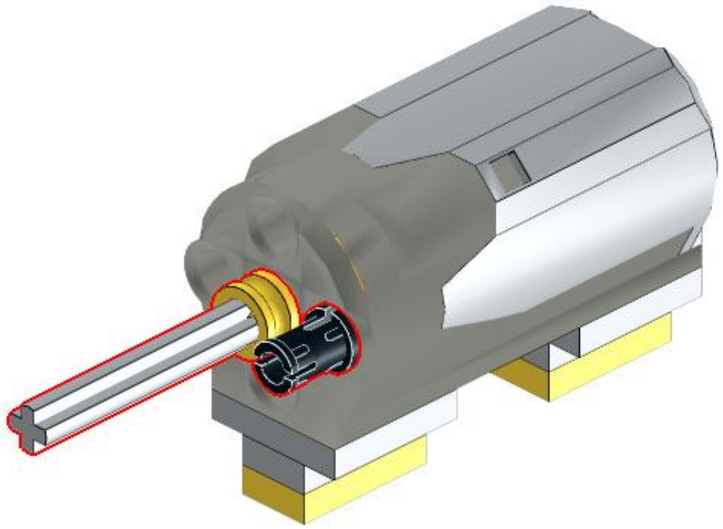

21

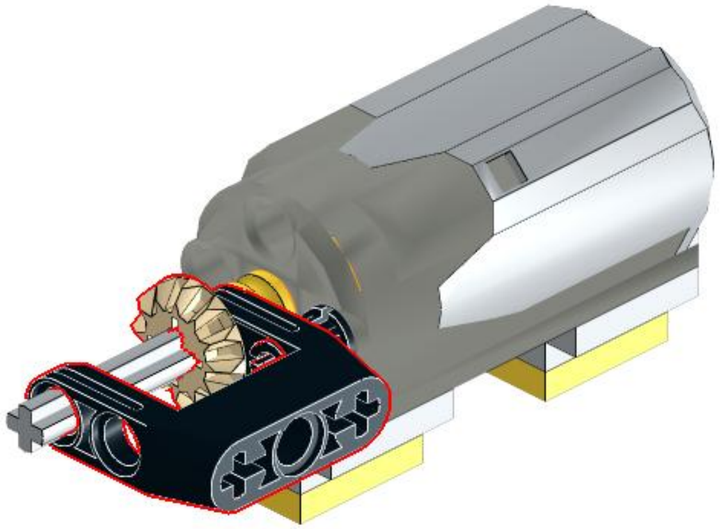

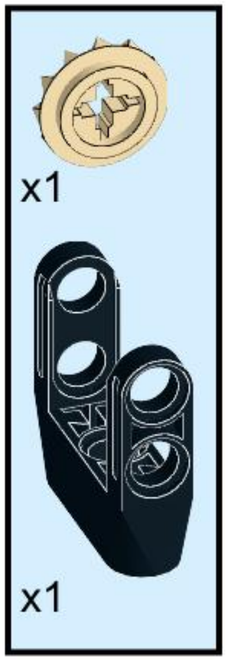

22

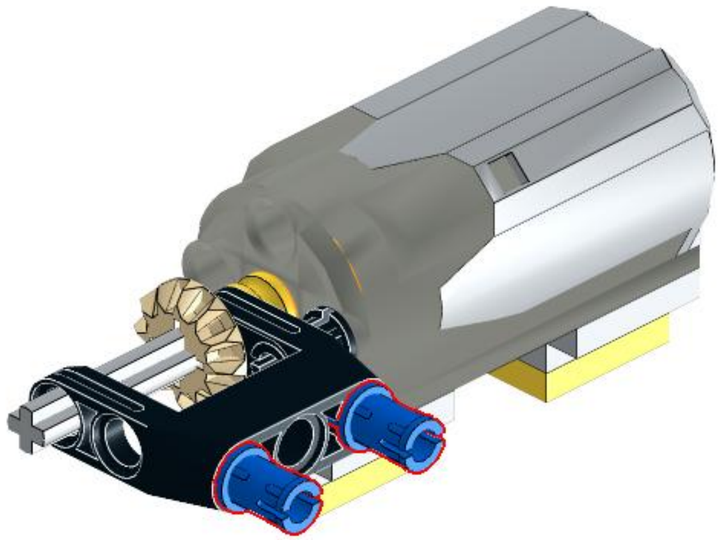

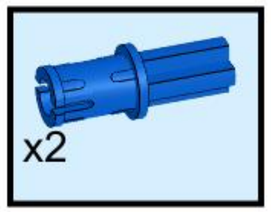

23

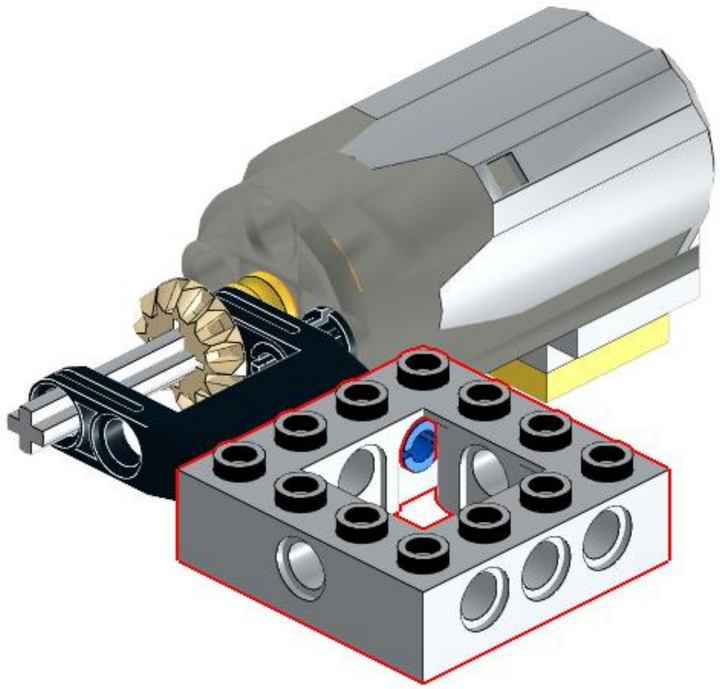

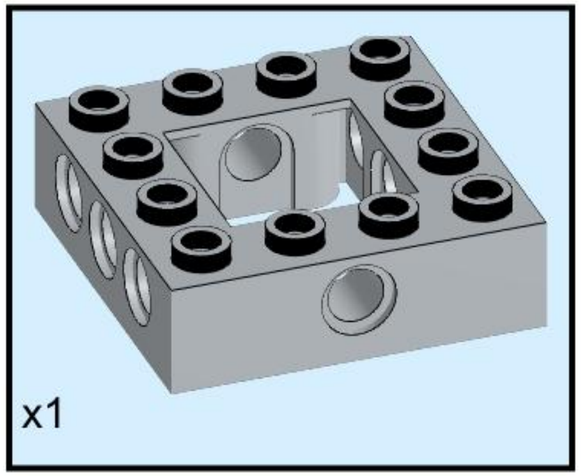

24

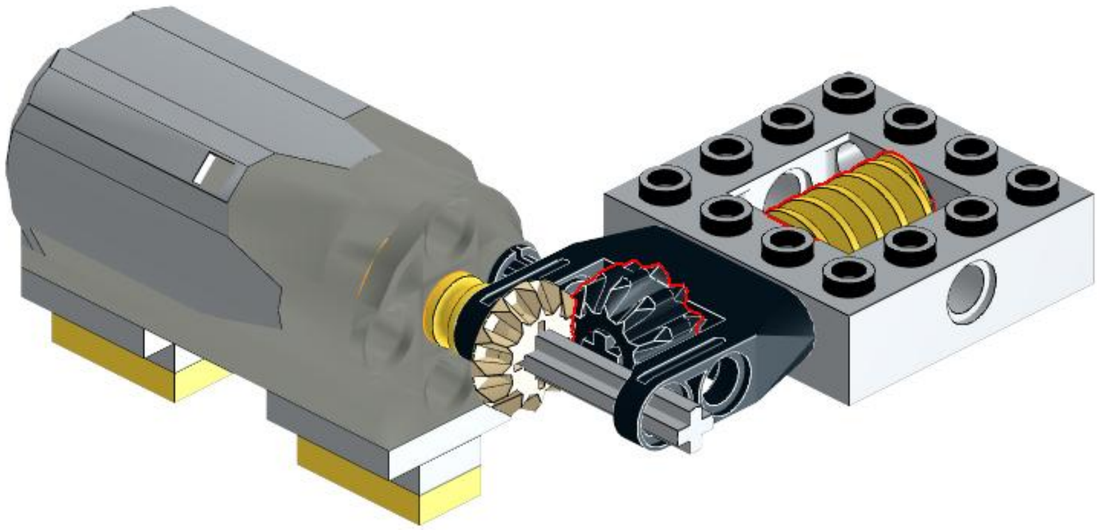

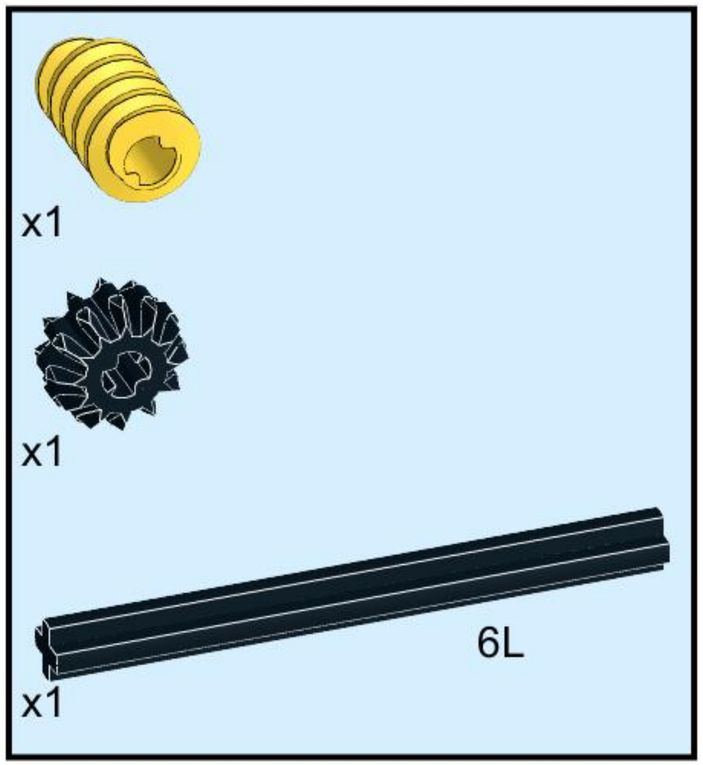

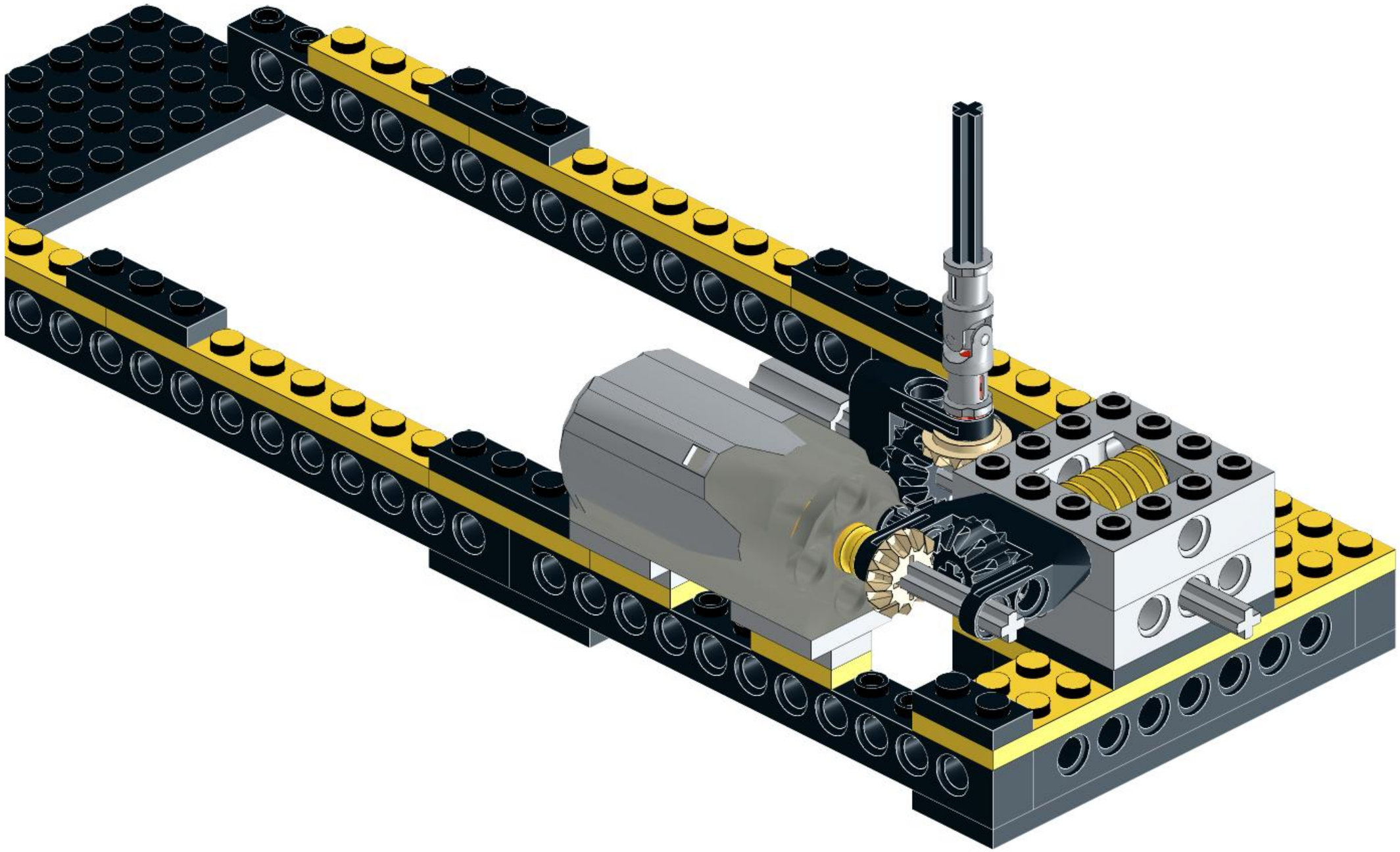

26 Resume Here

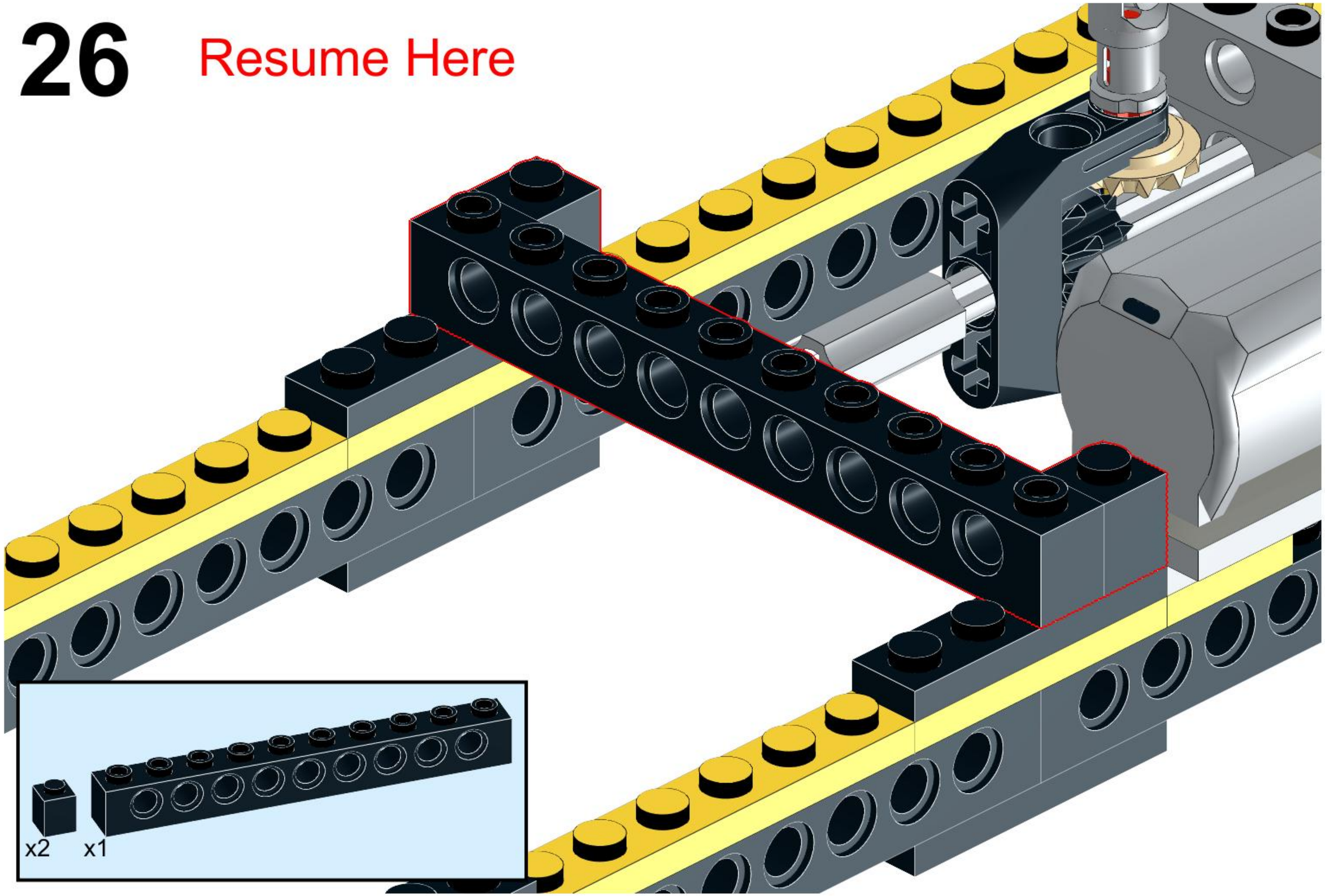

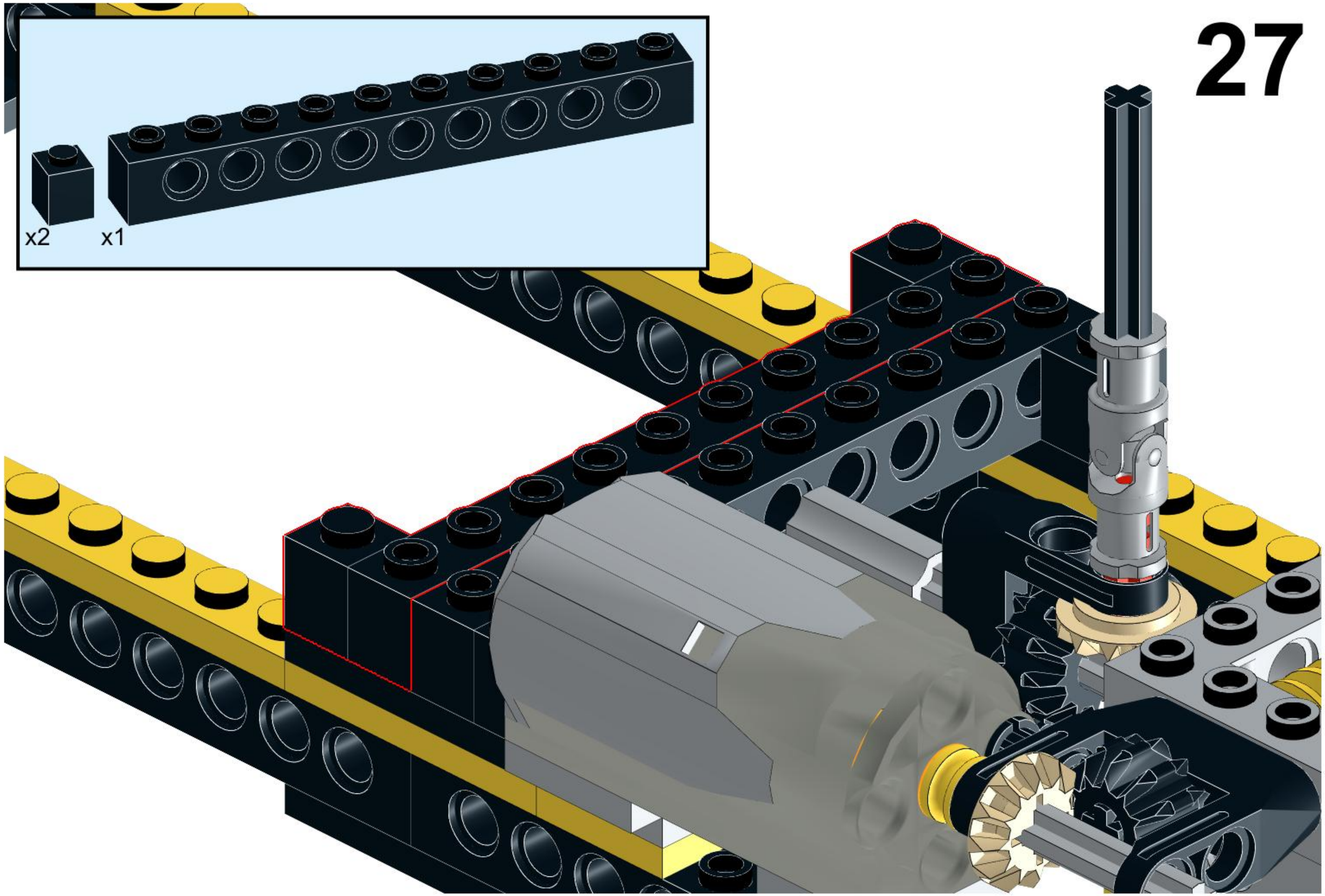
x2
x1

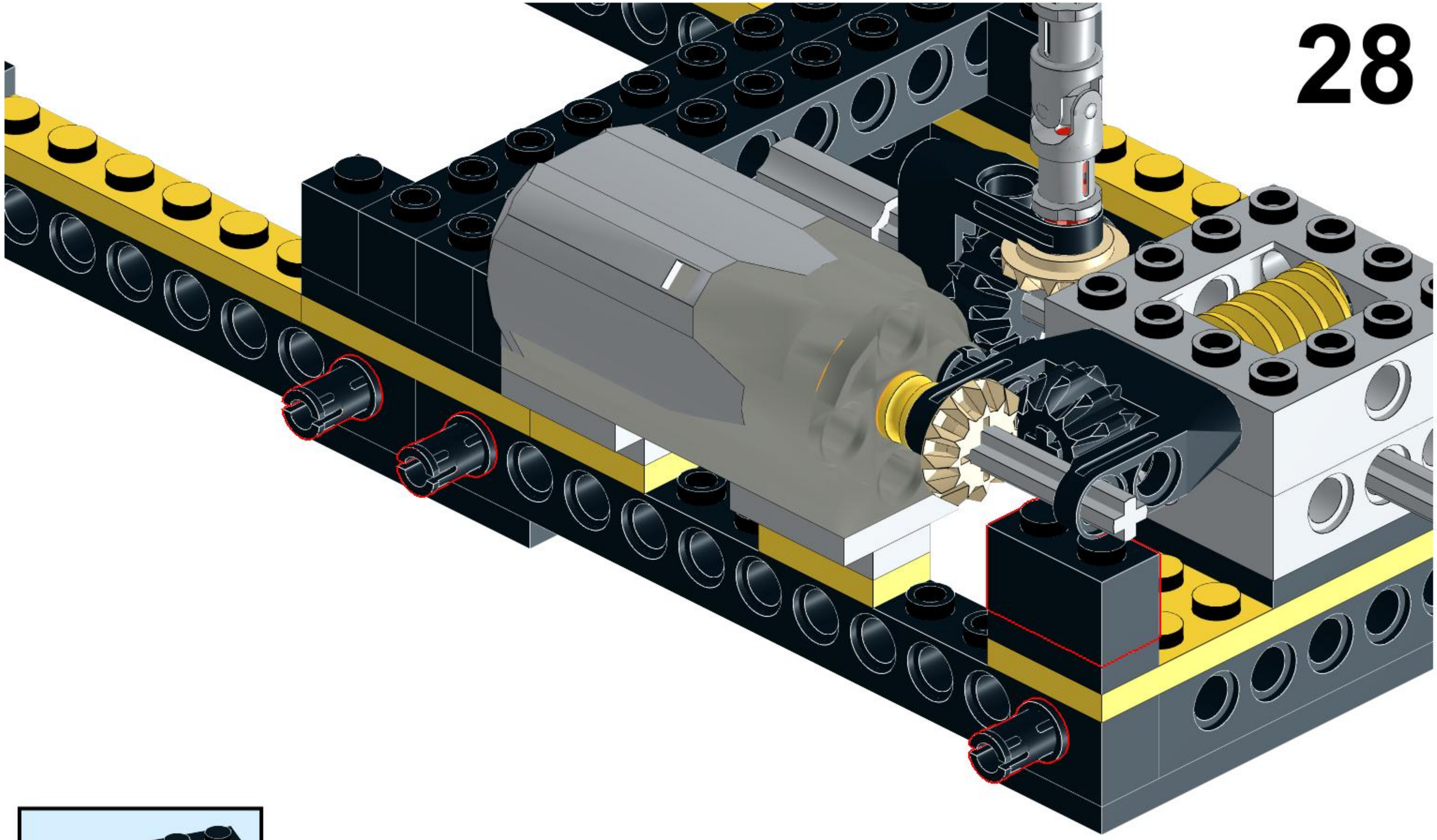

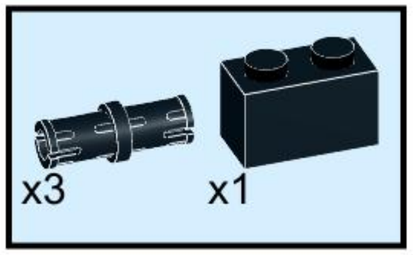
x3
x1

29

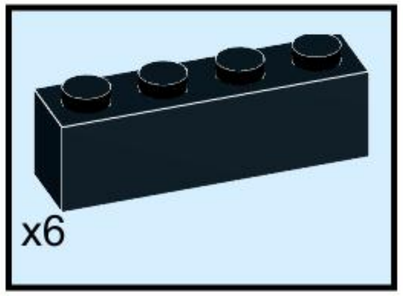

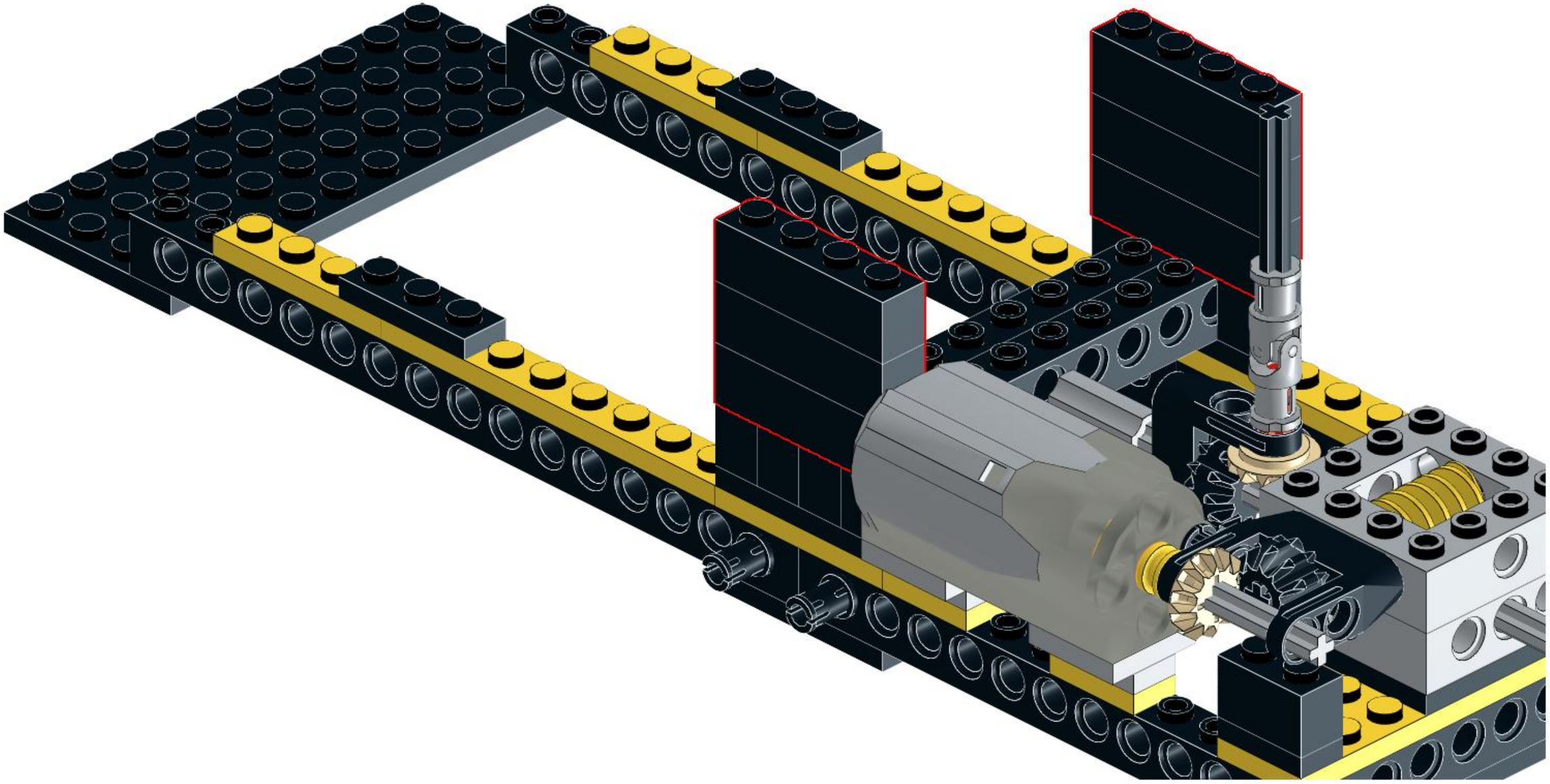

30

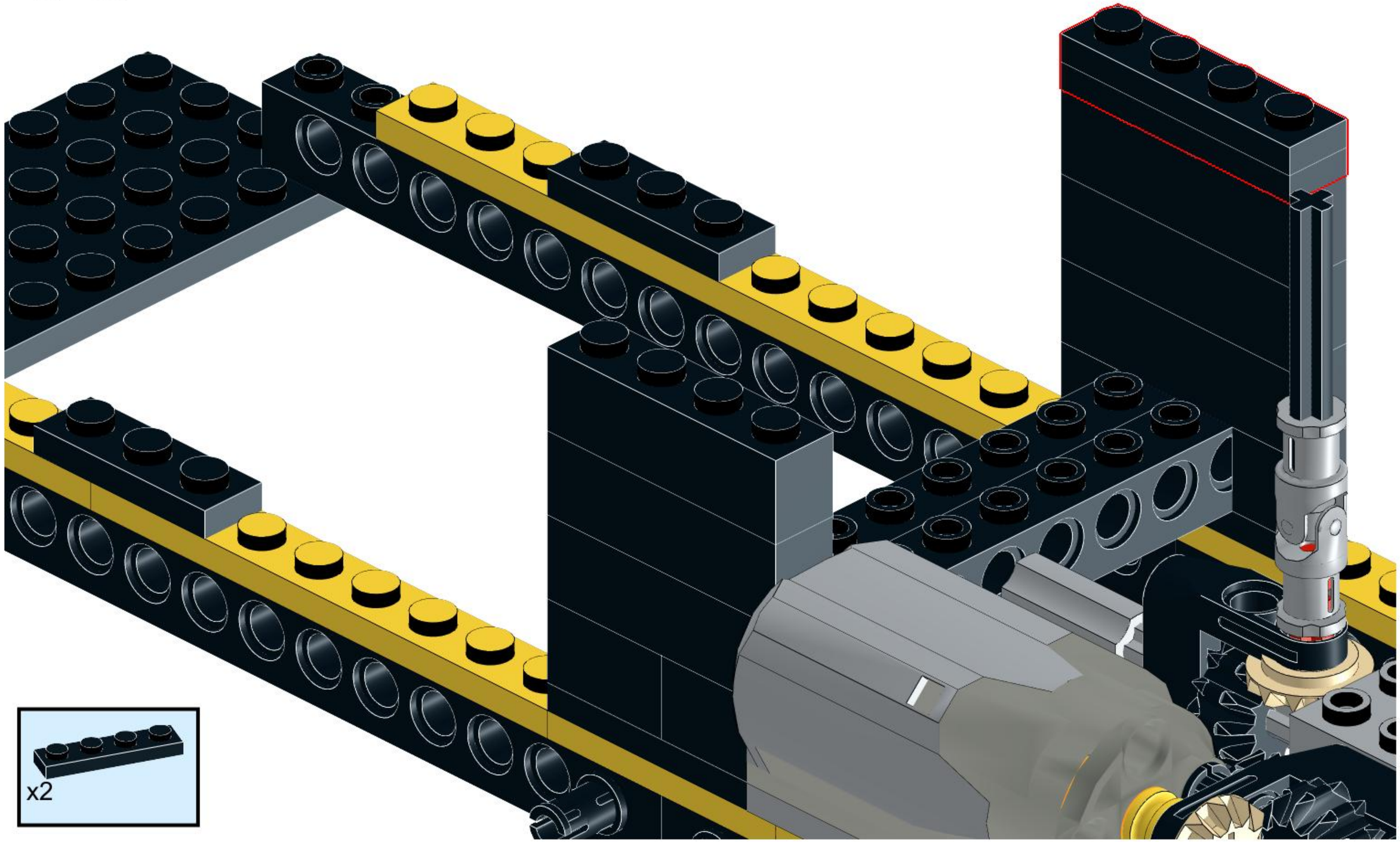

31

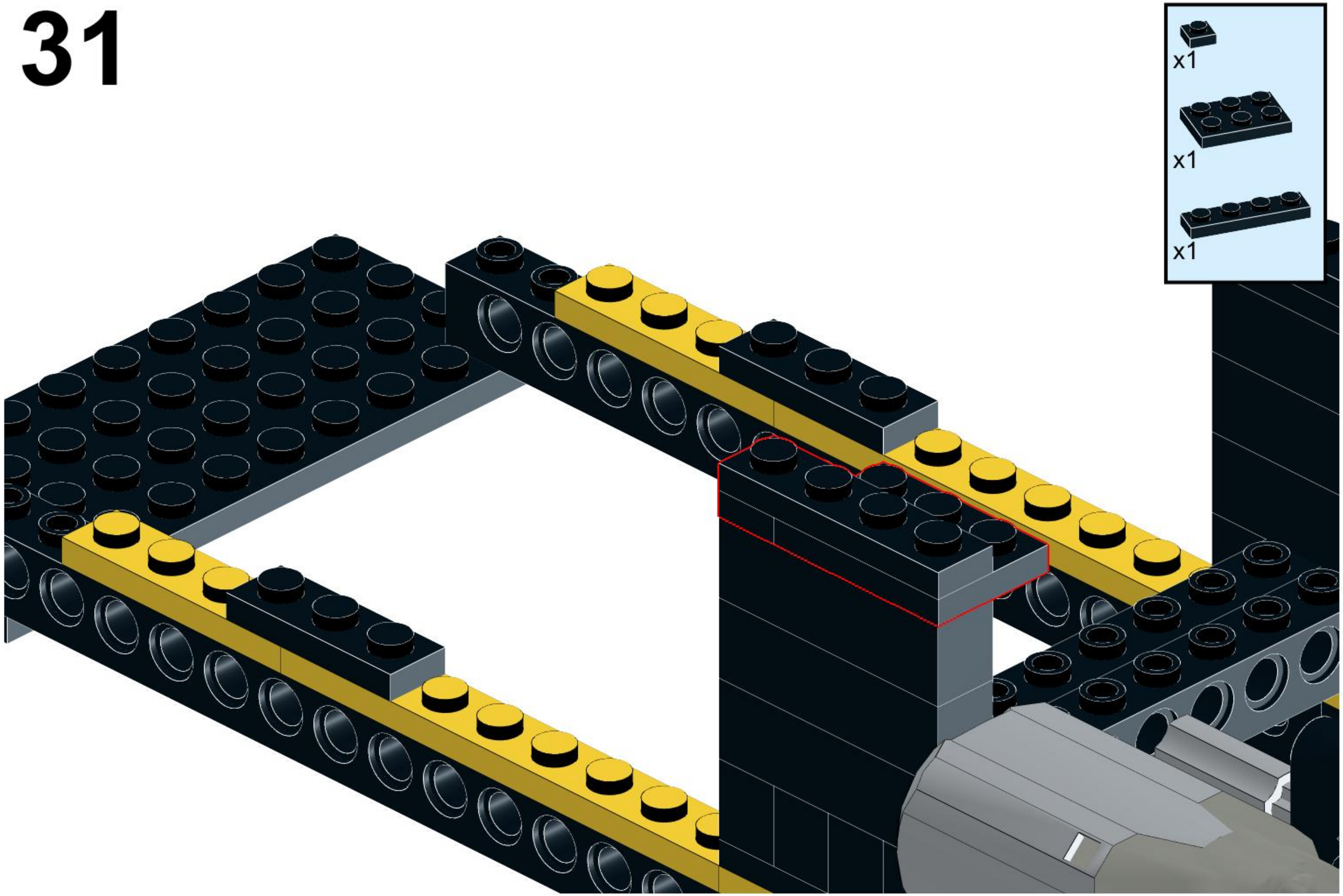

32

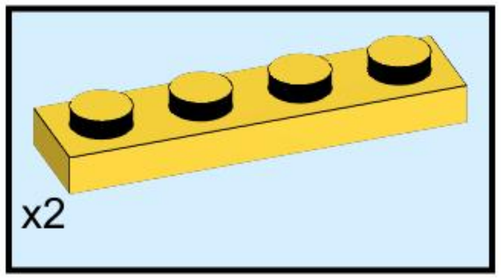

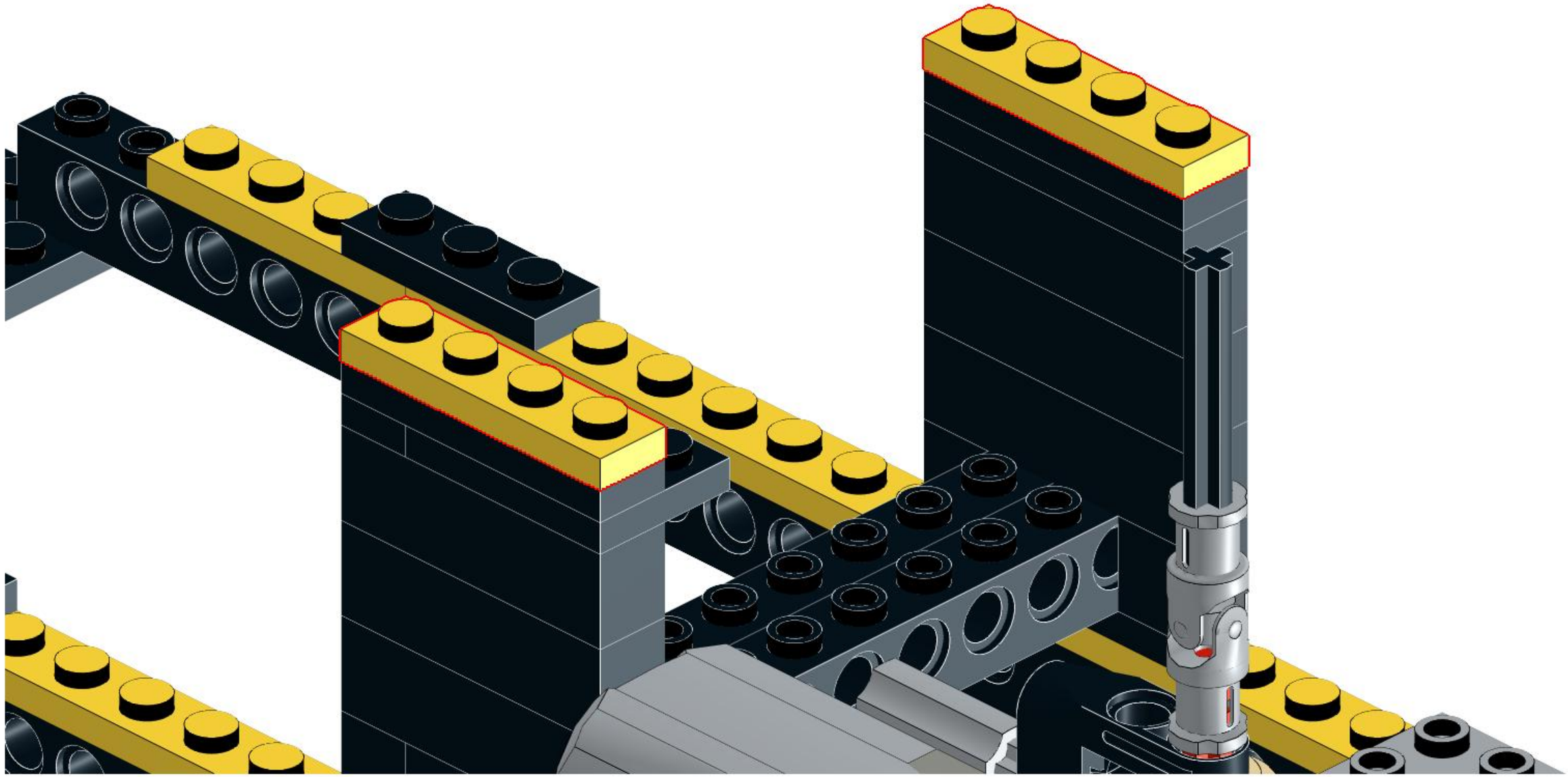

33

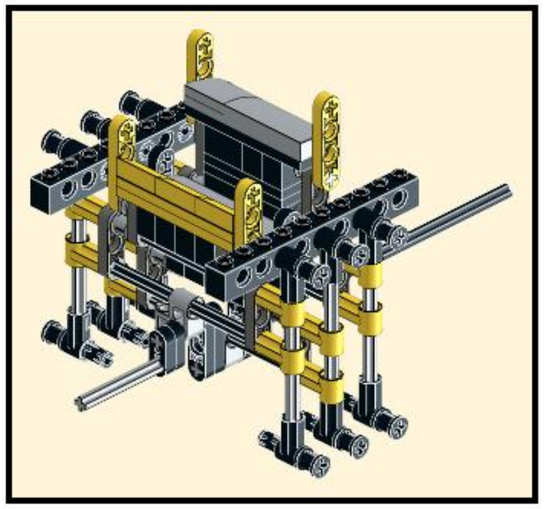

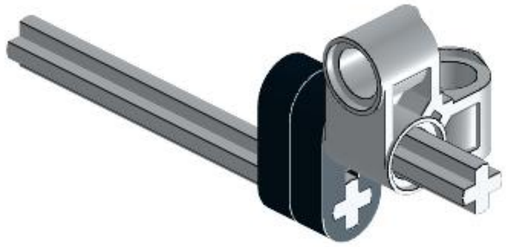

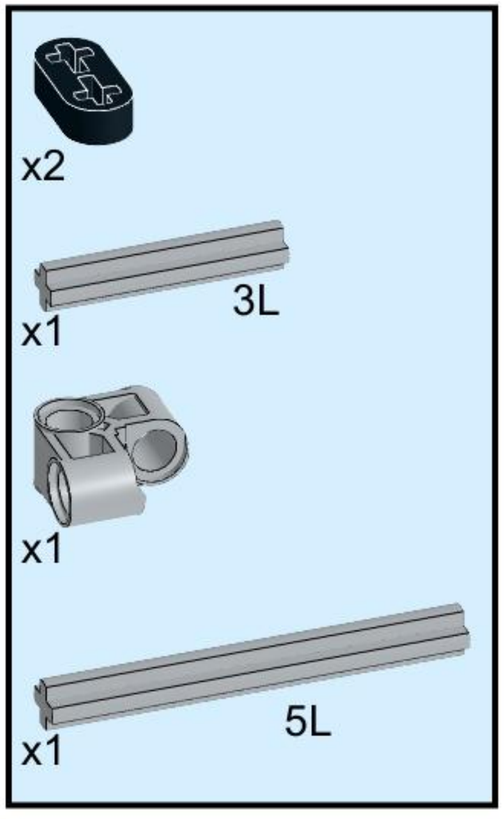

34

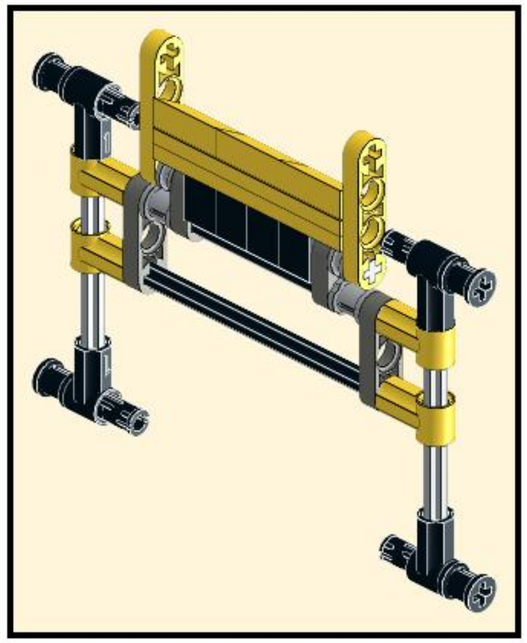

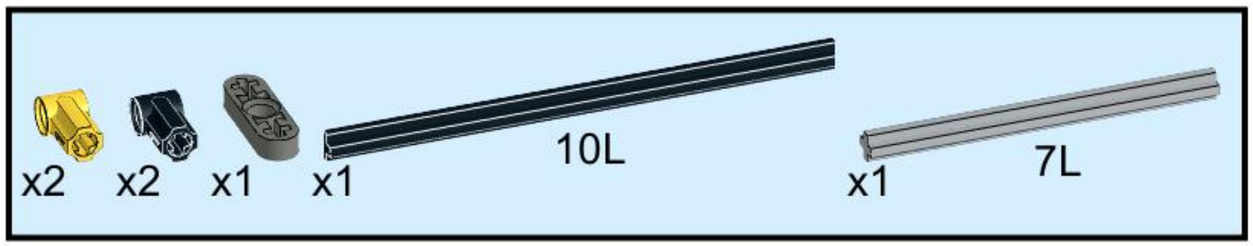

Before building this sub-assembly, view the next several steps to understand how it will be attached to the drive shaft.

35

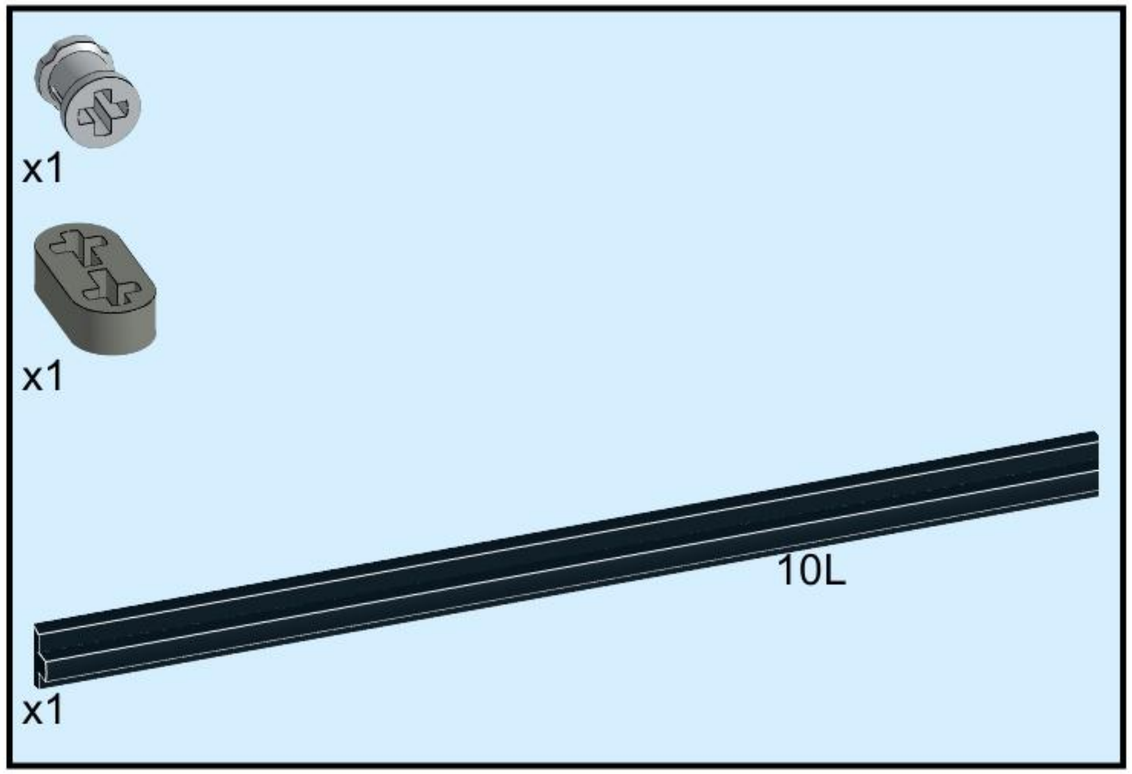

36

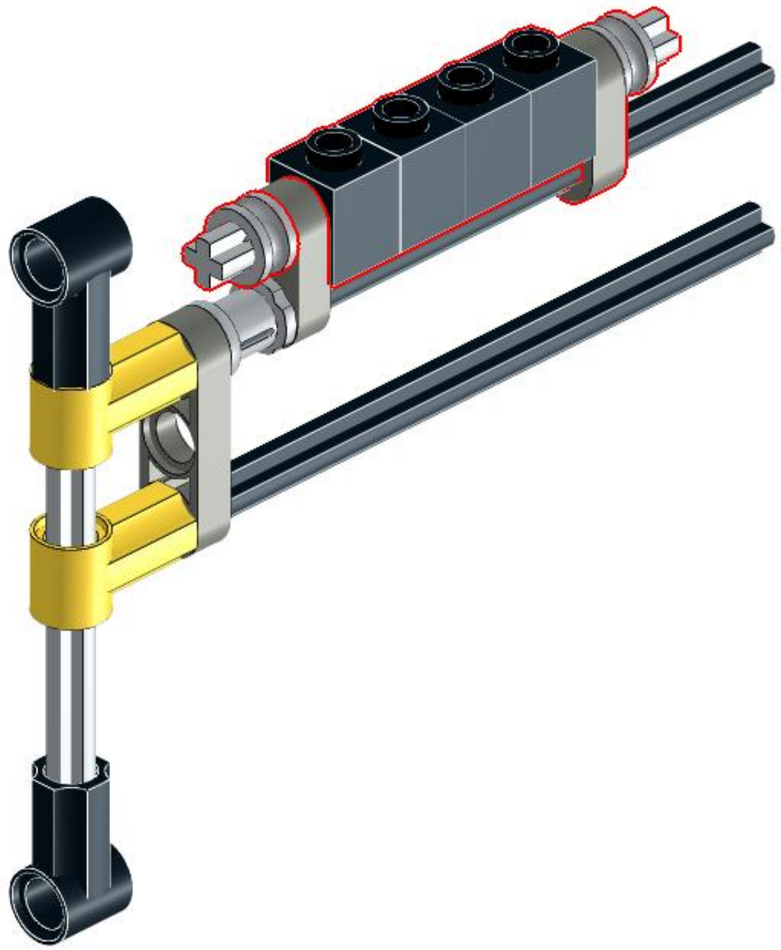

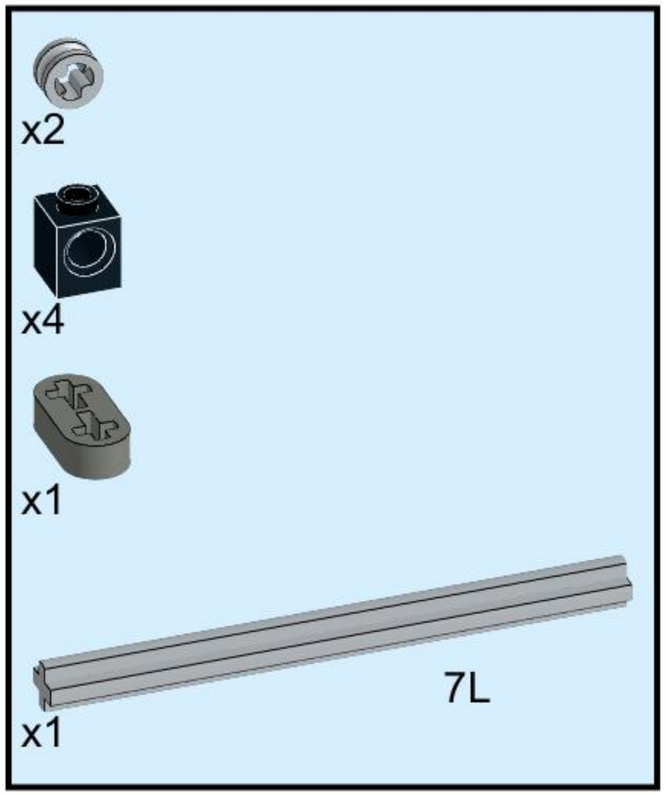

37

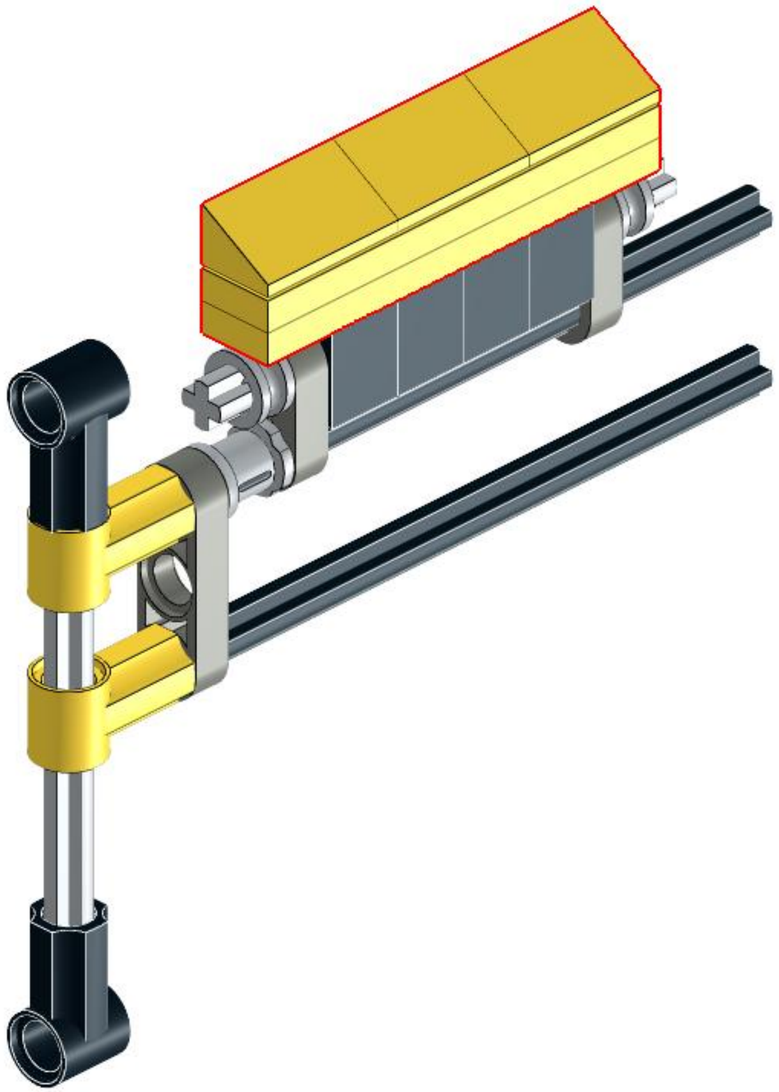

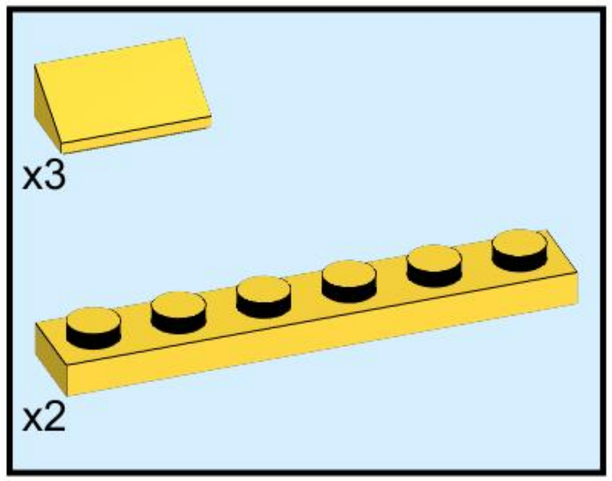

38

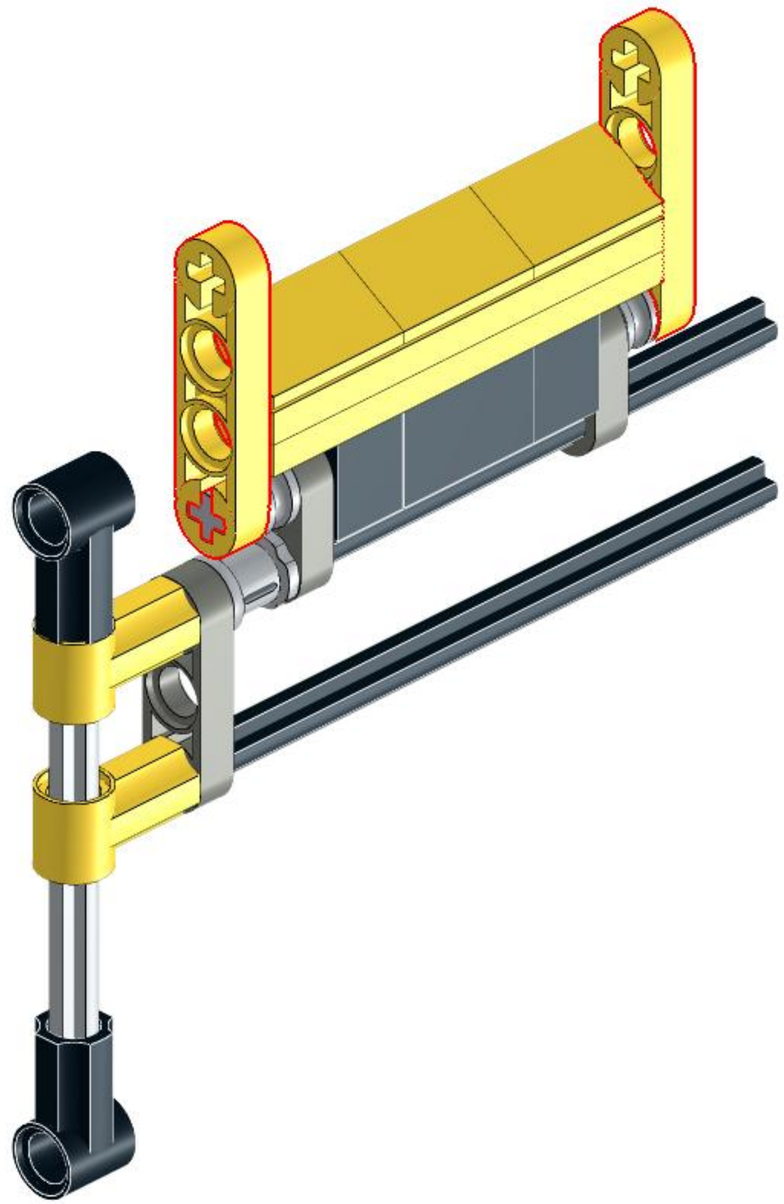

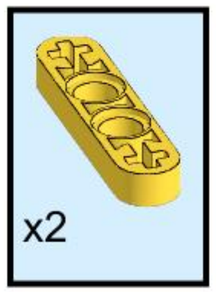

39

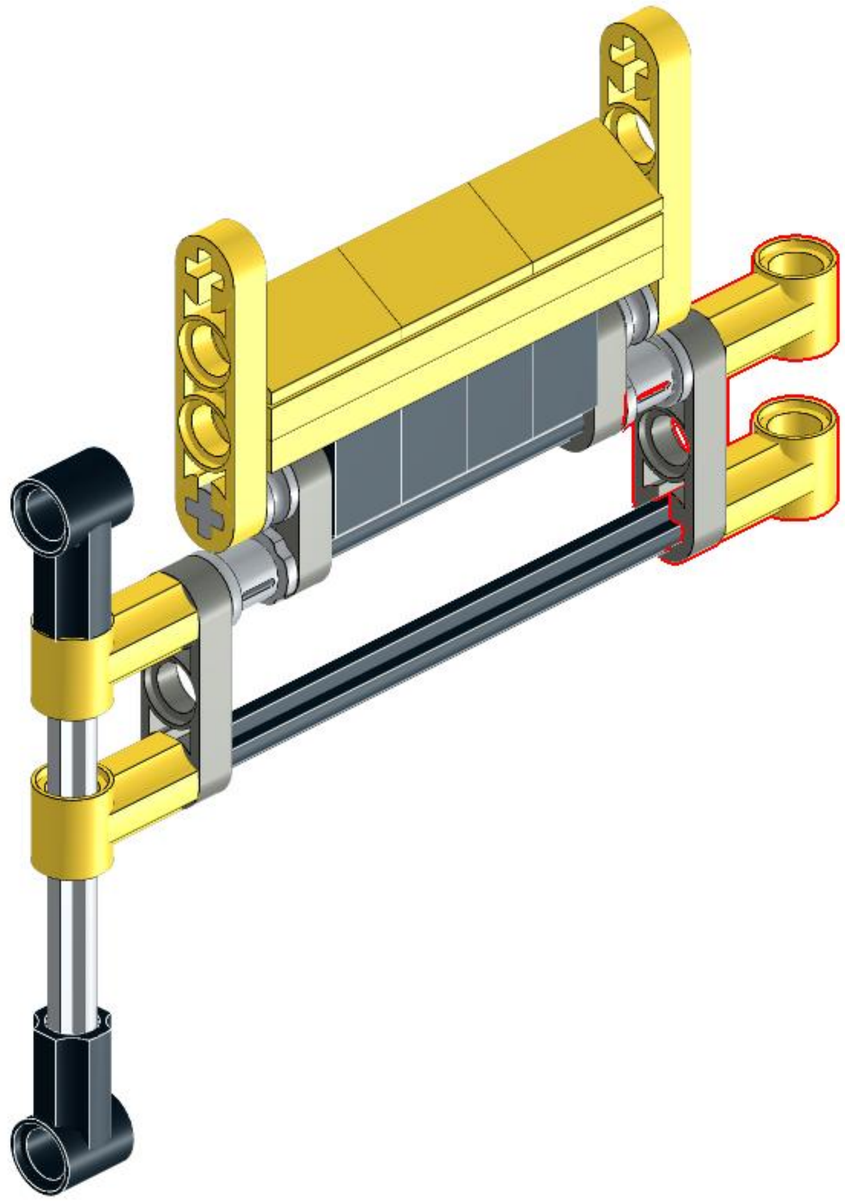

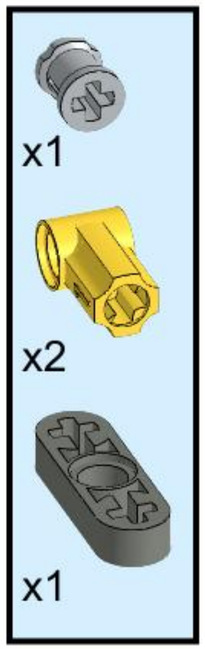

40

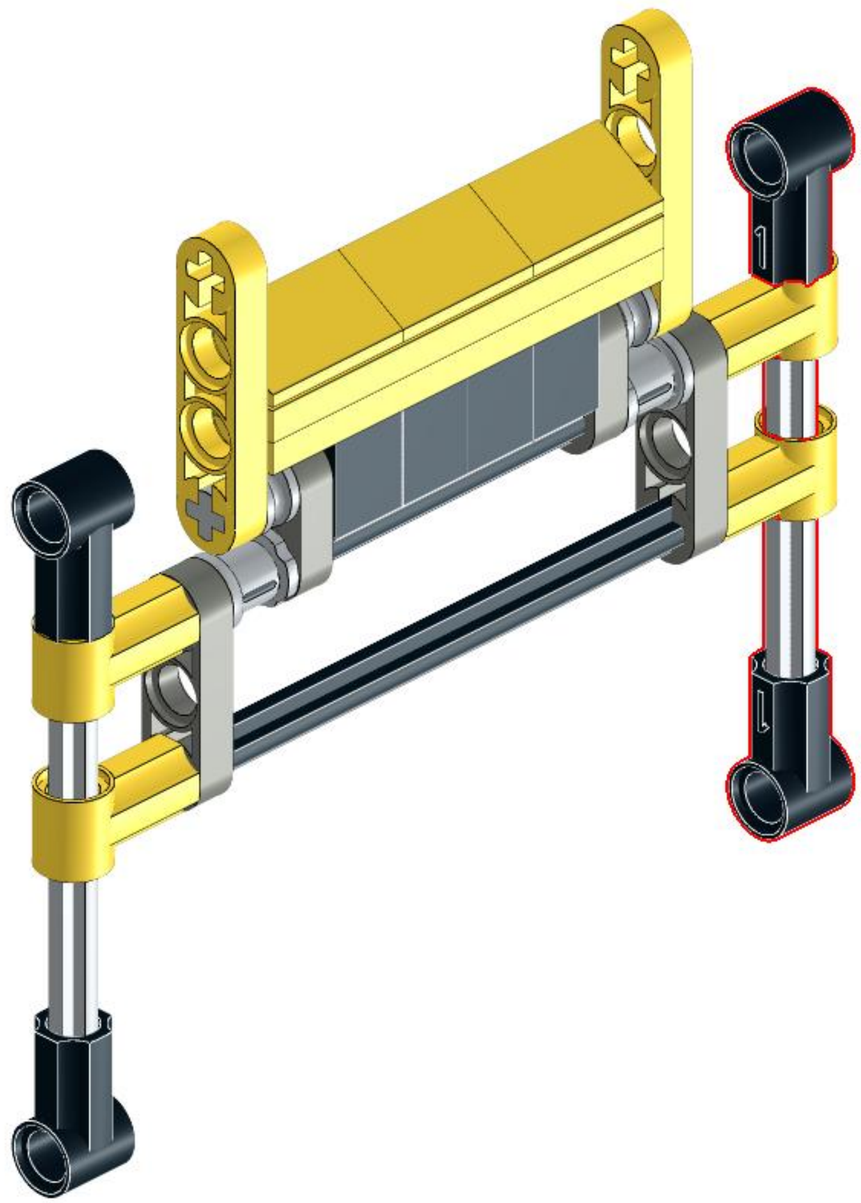

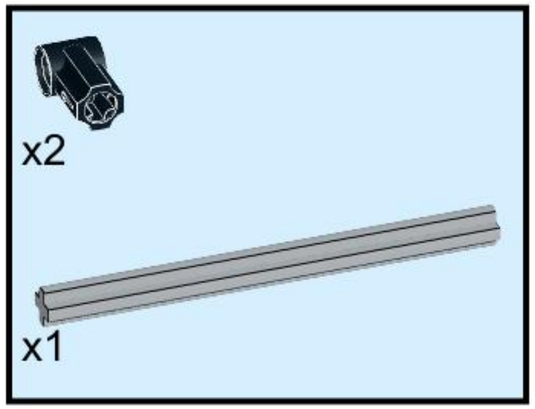

41

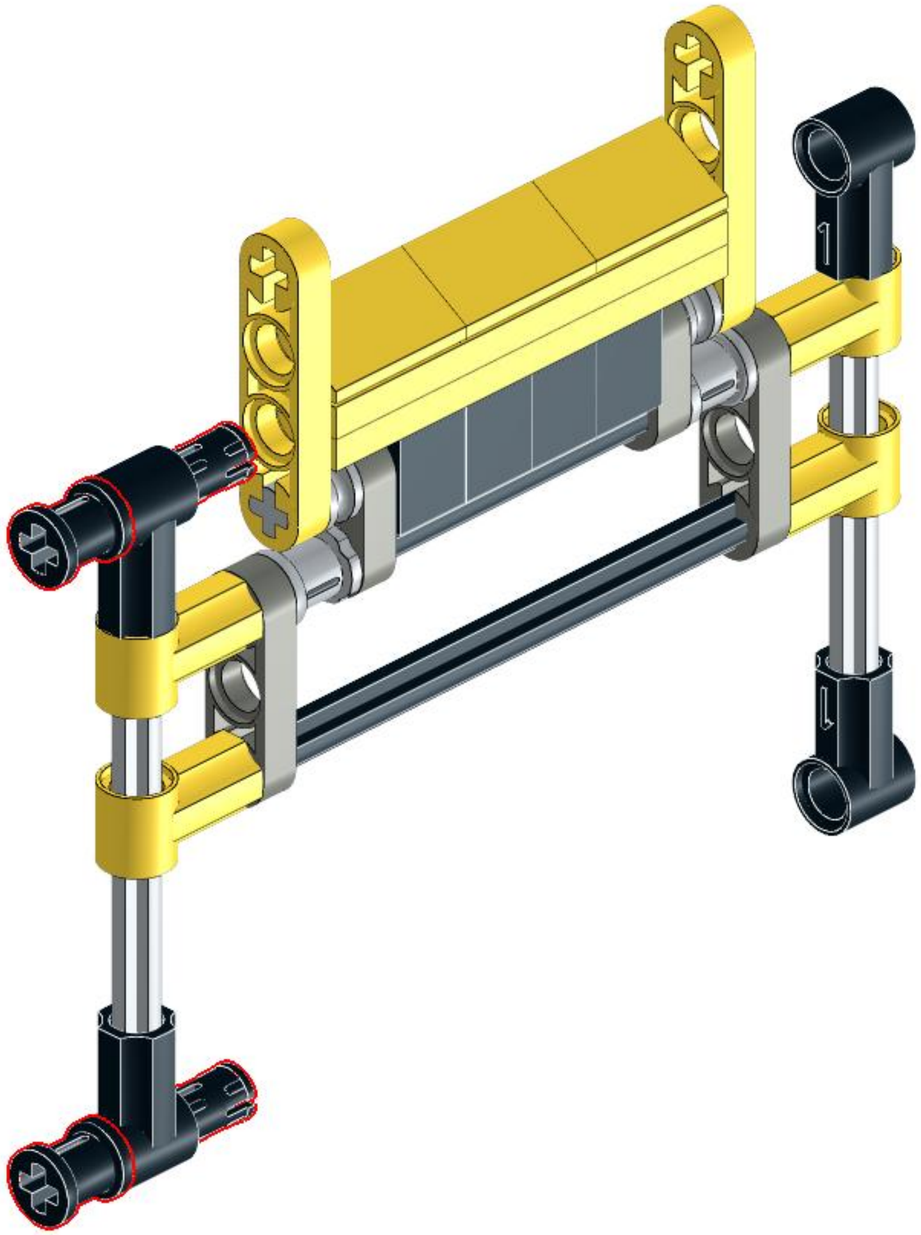

42

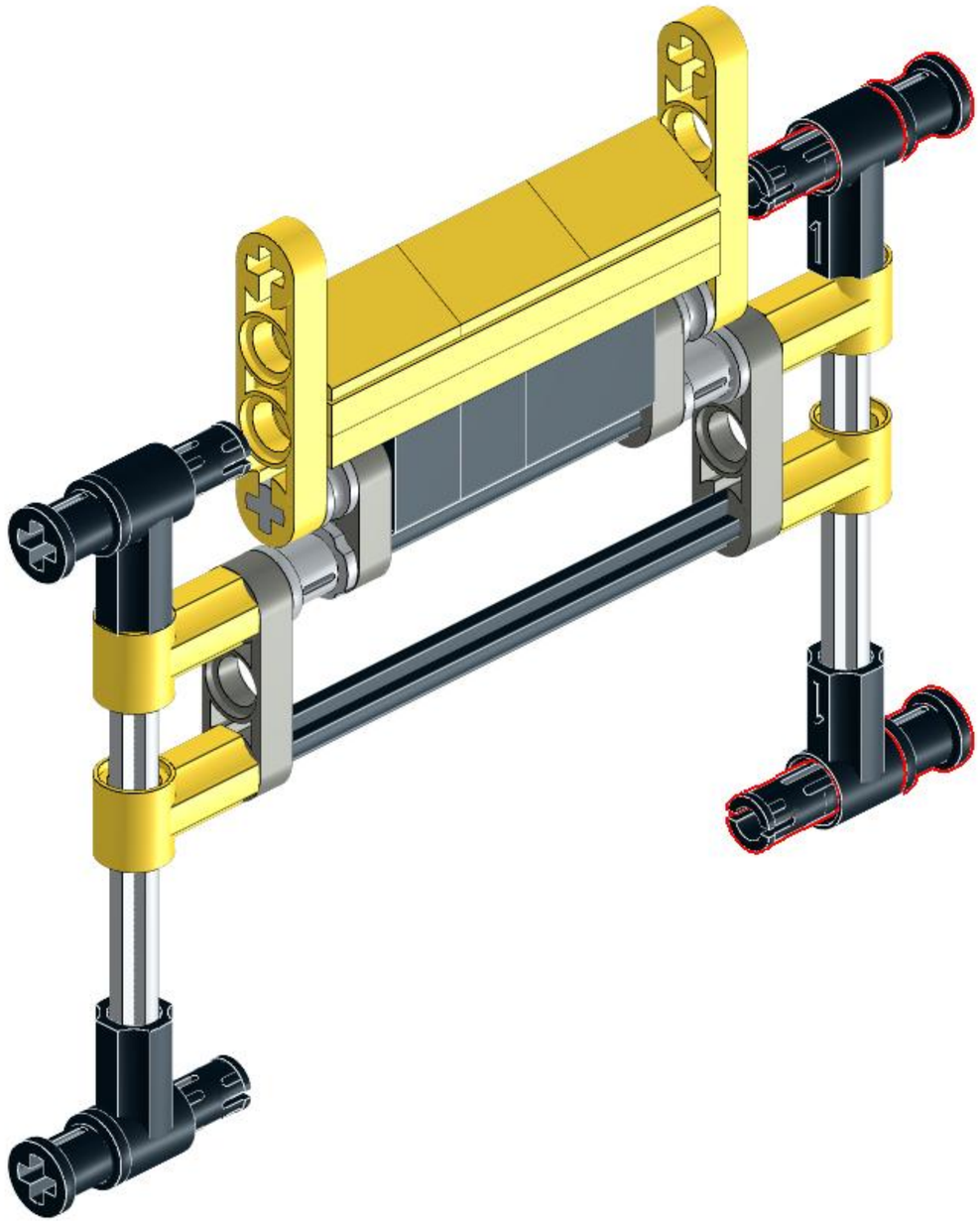

43

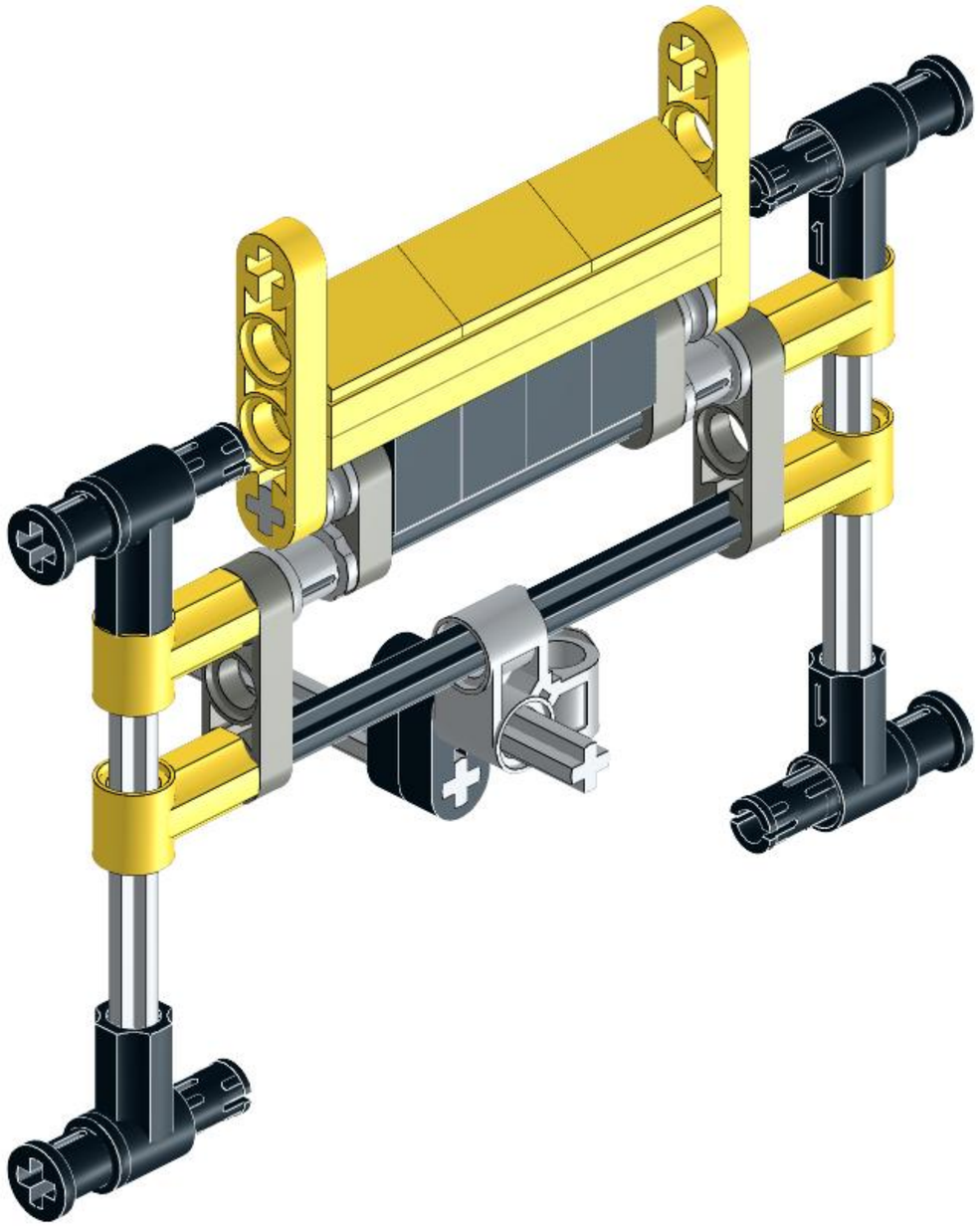

44

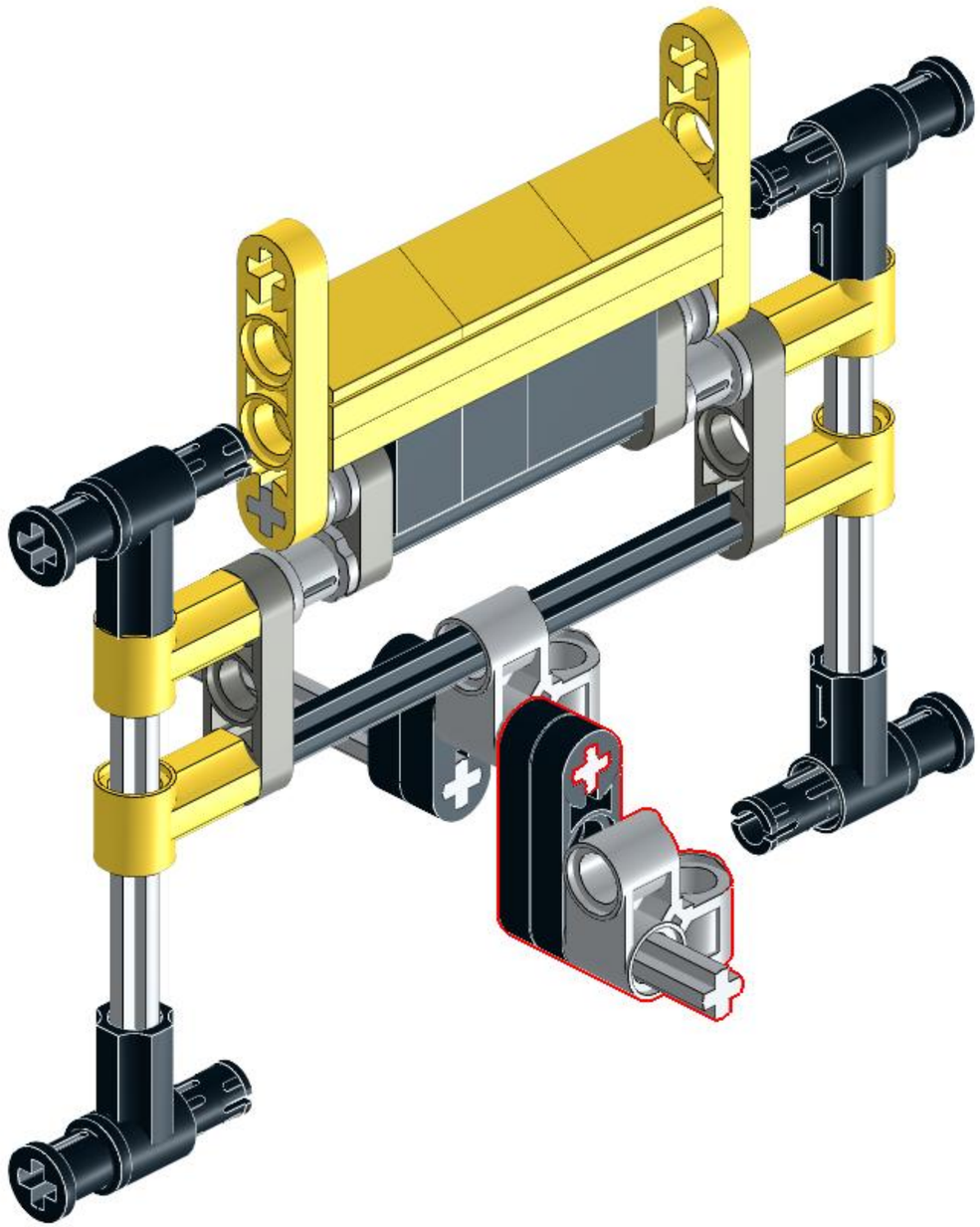

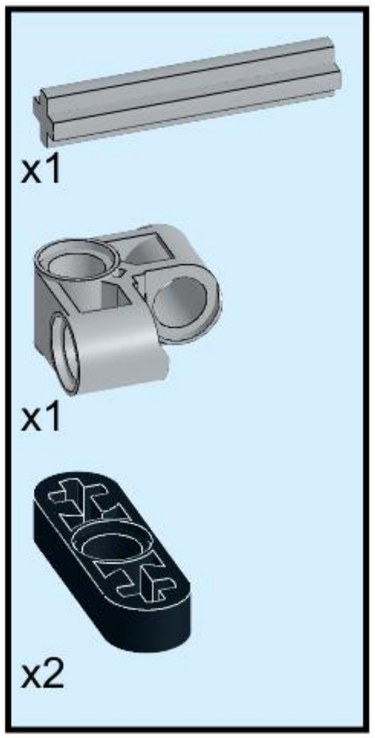

45

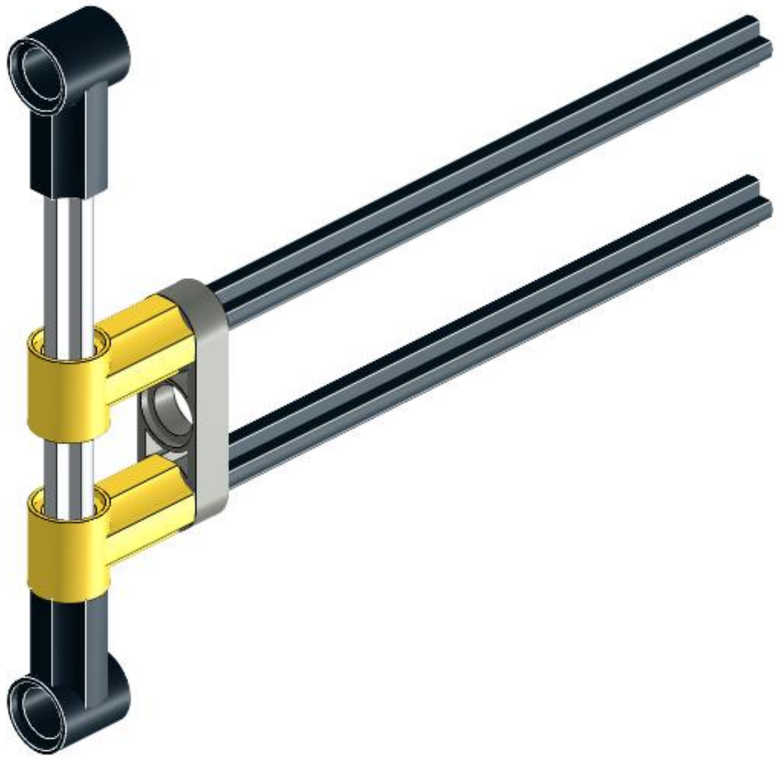

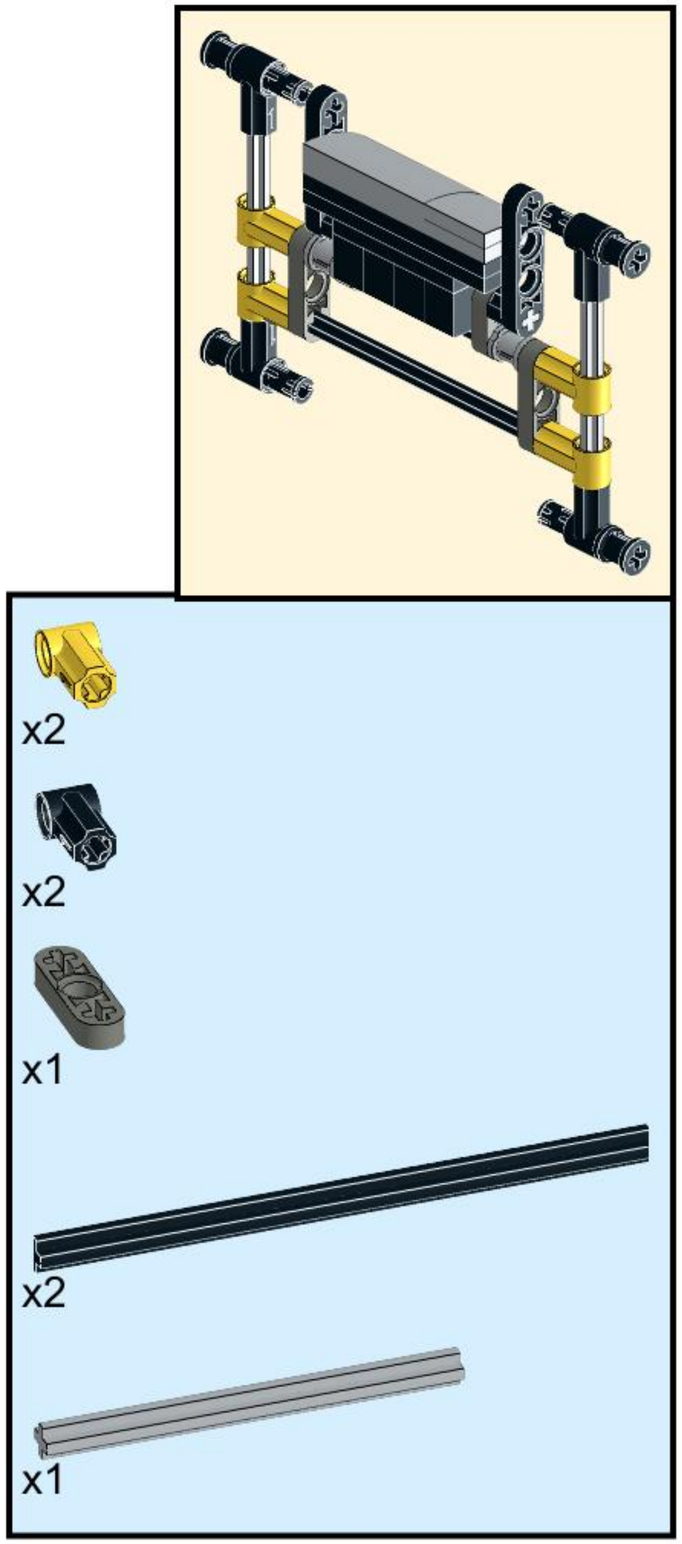

46

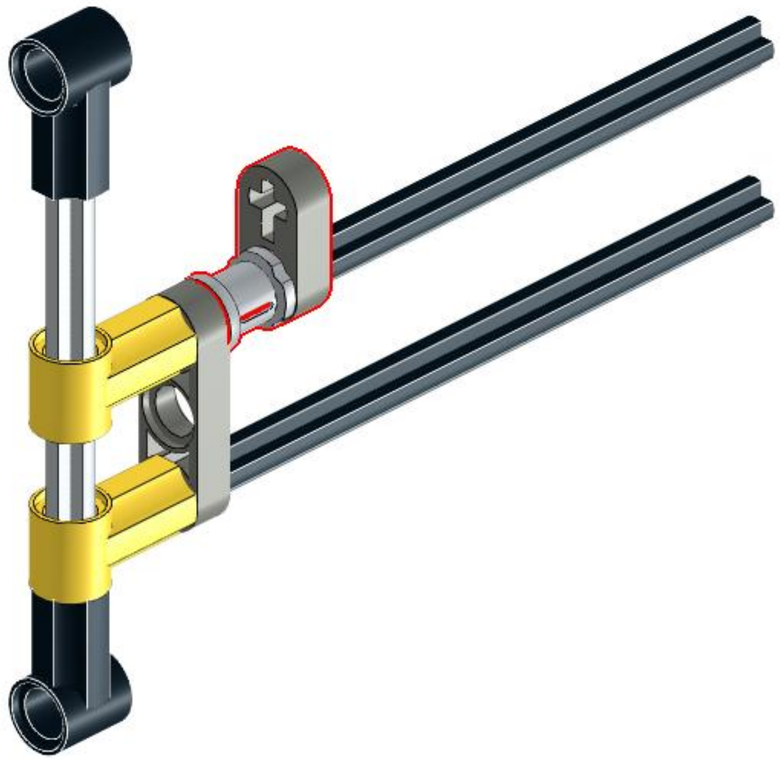

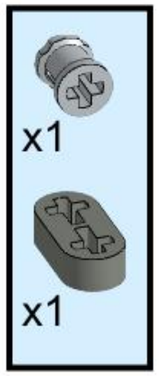

47

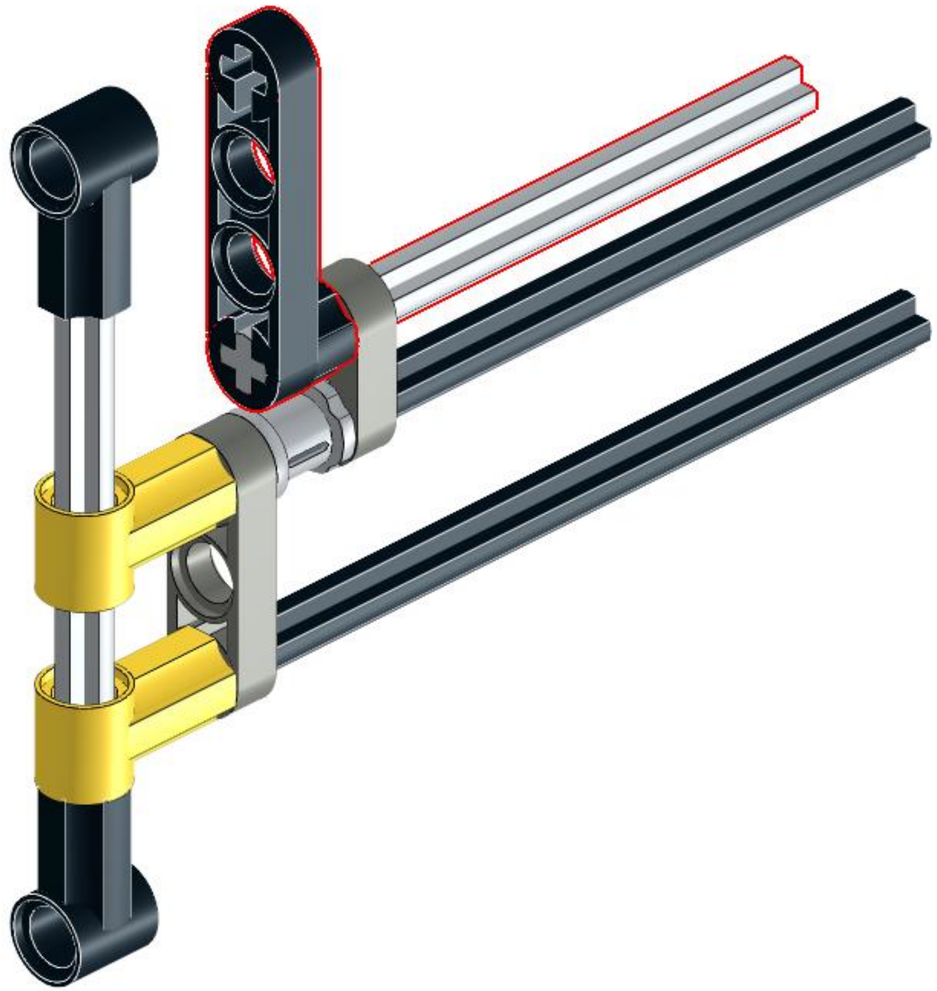

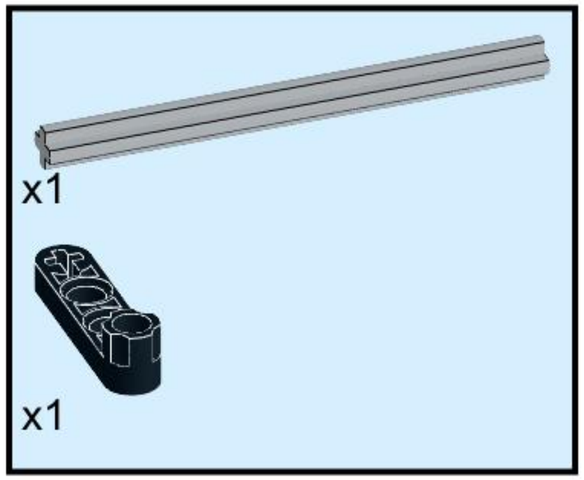

48

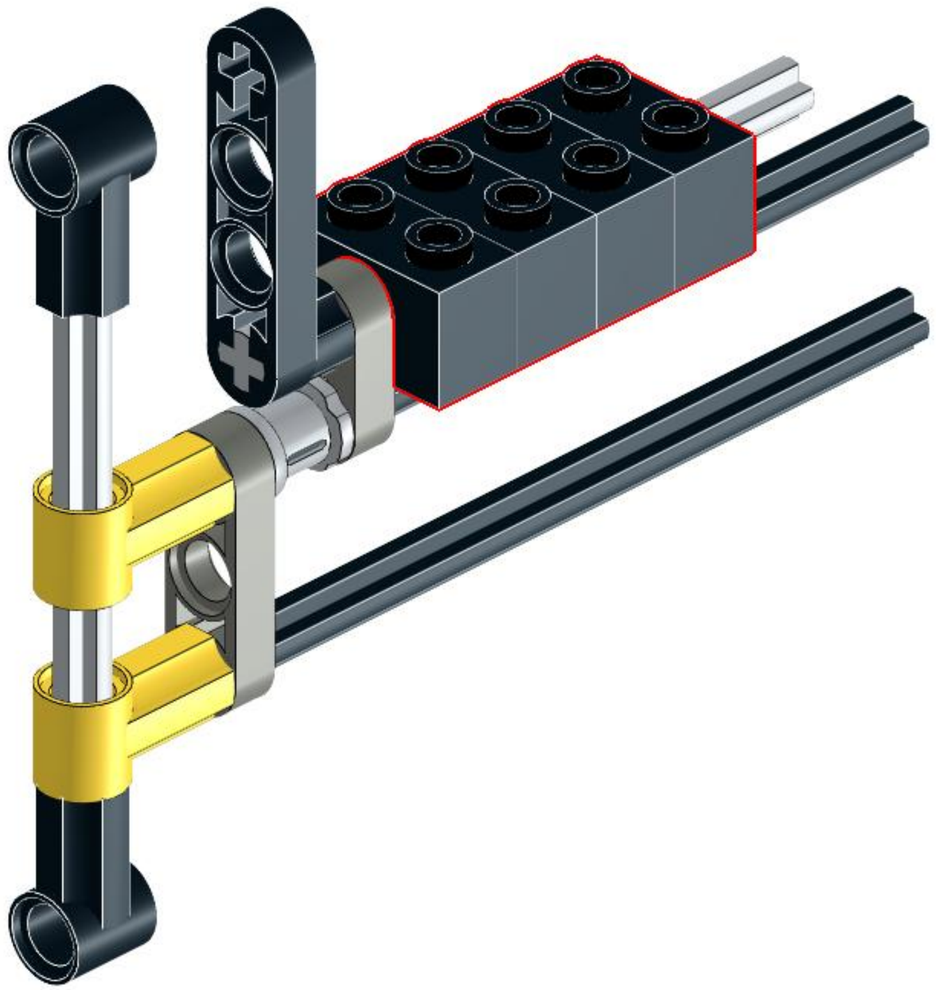

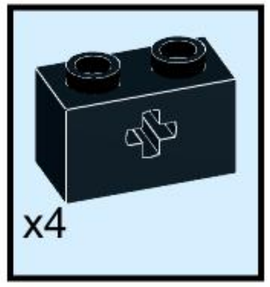

49

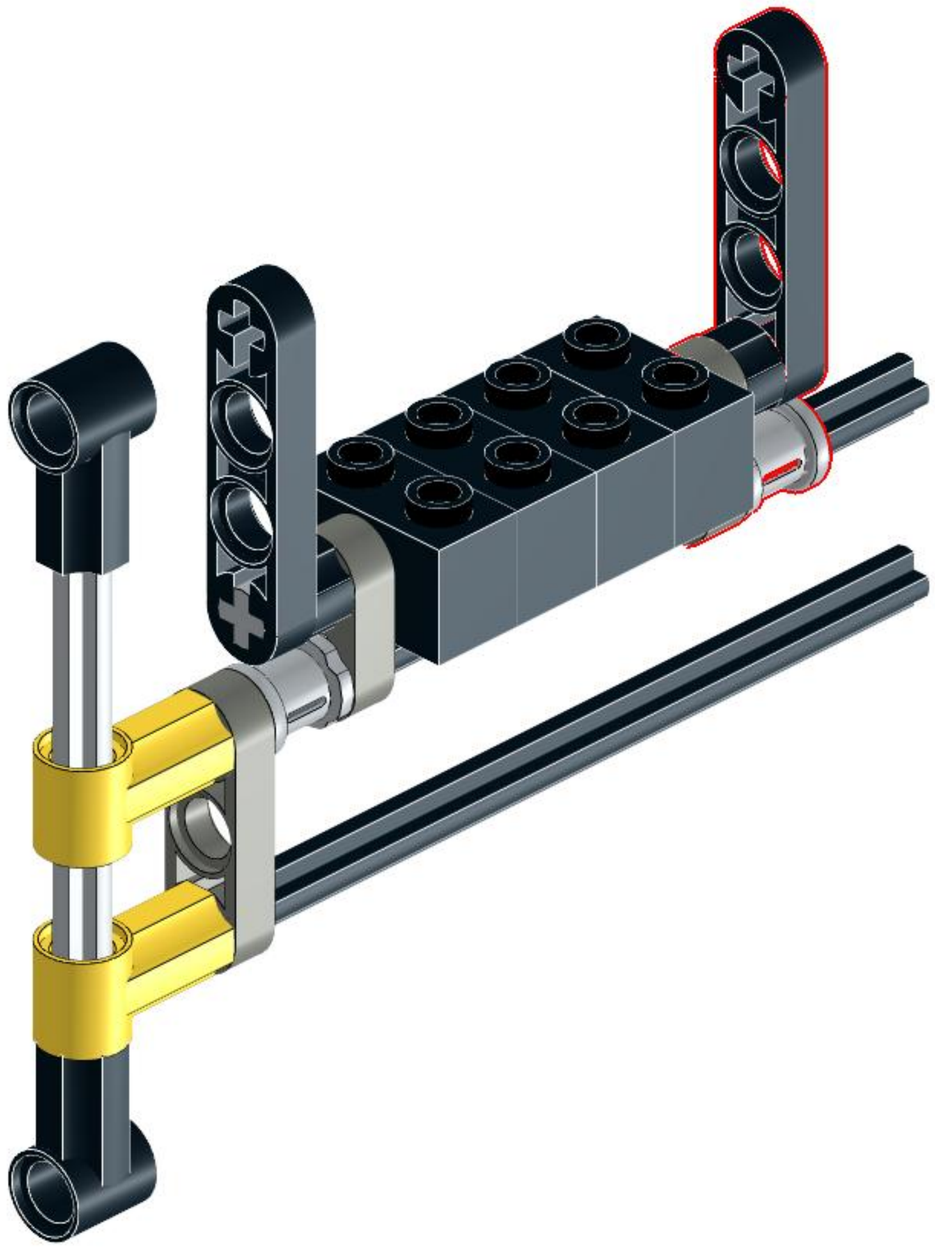

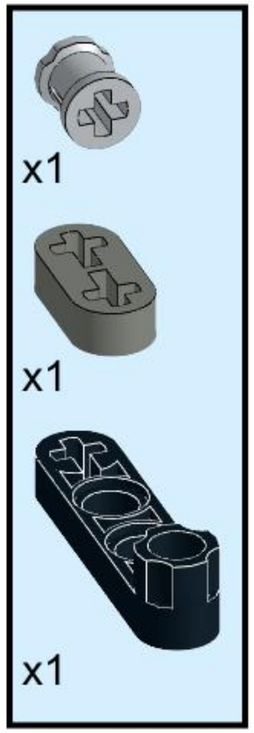

50

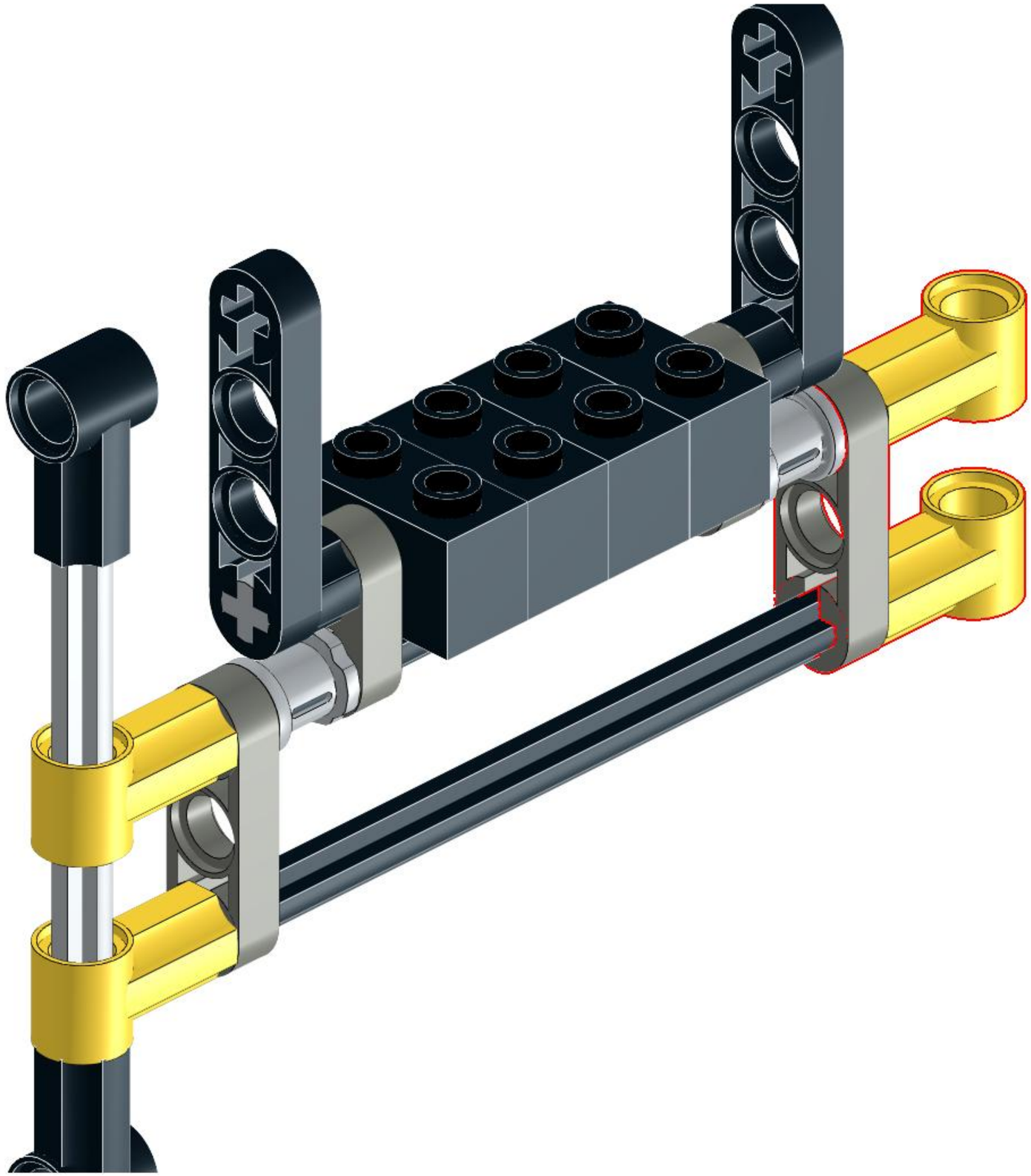

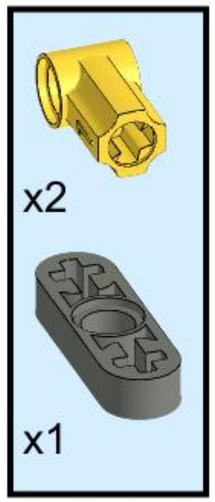

51

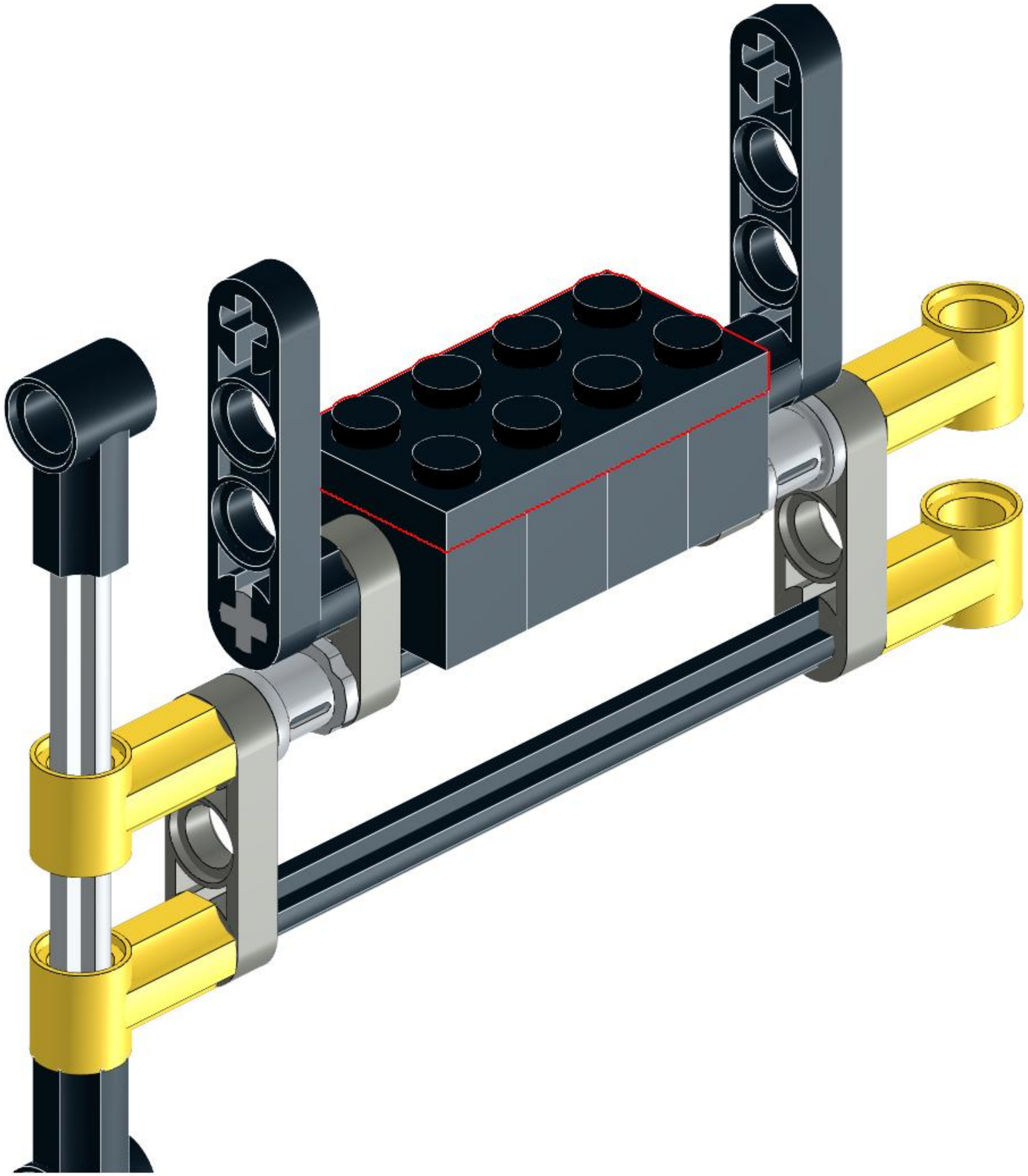

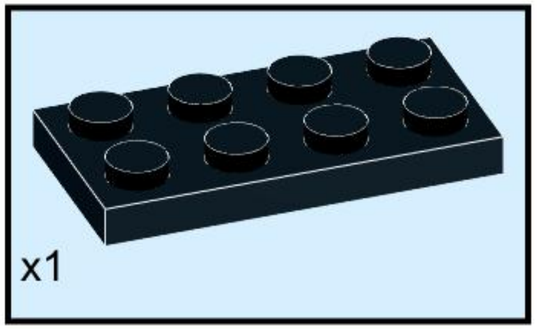

52

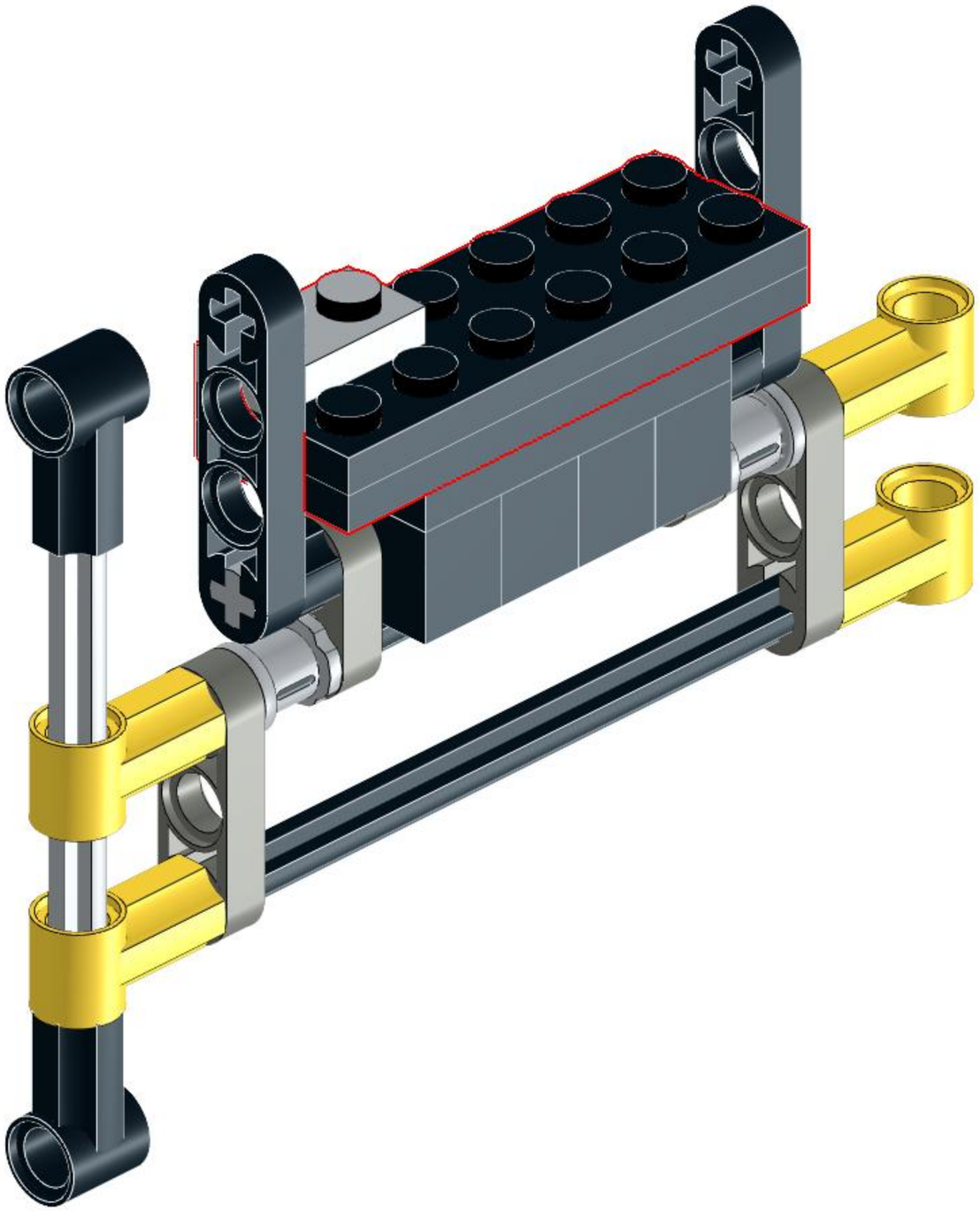

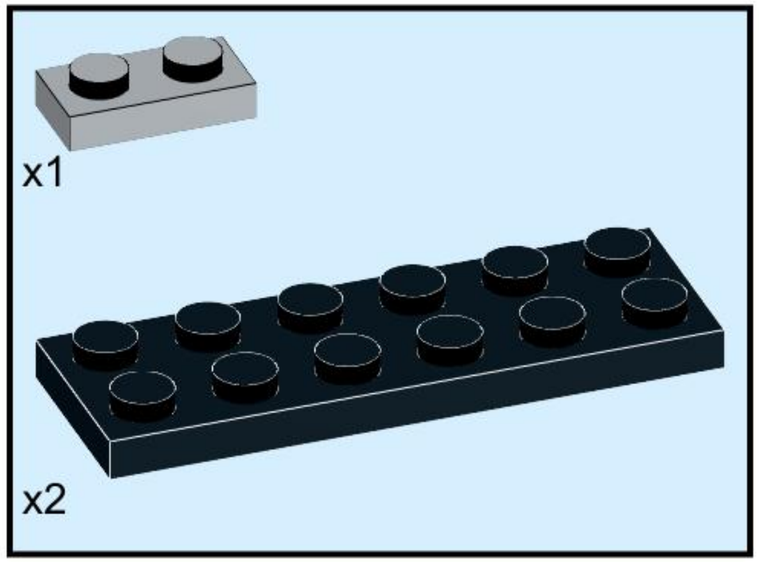

53

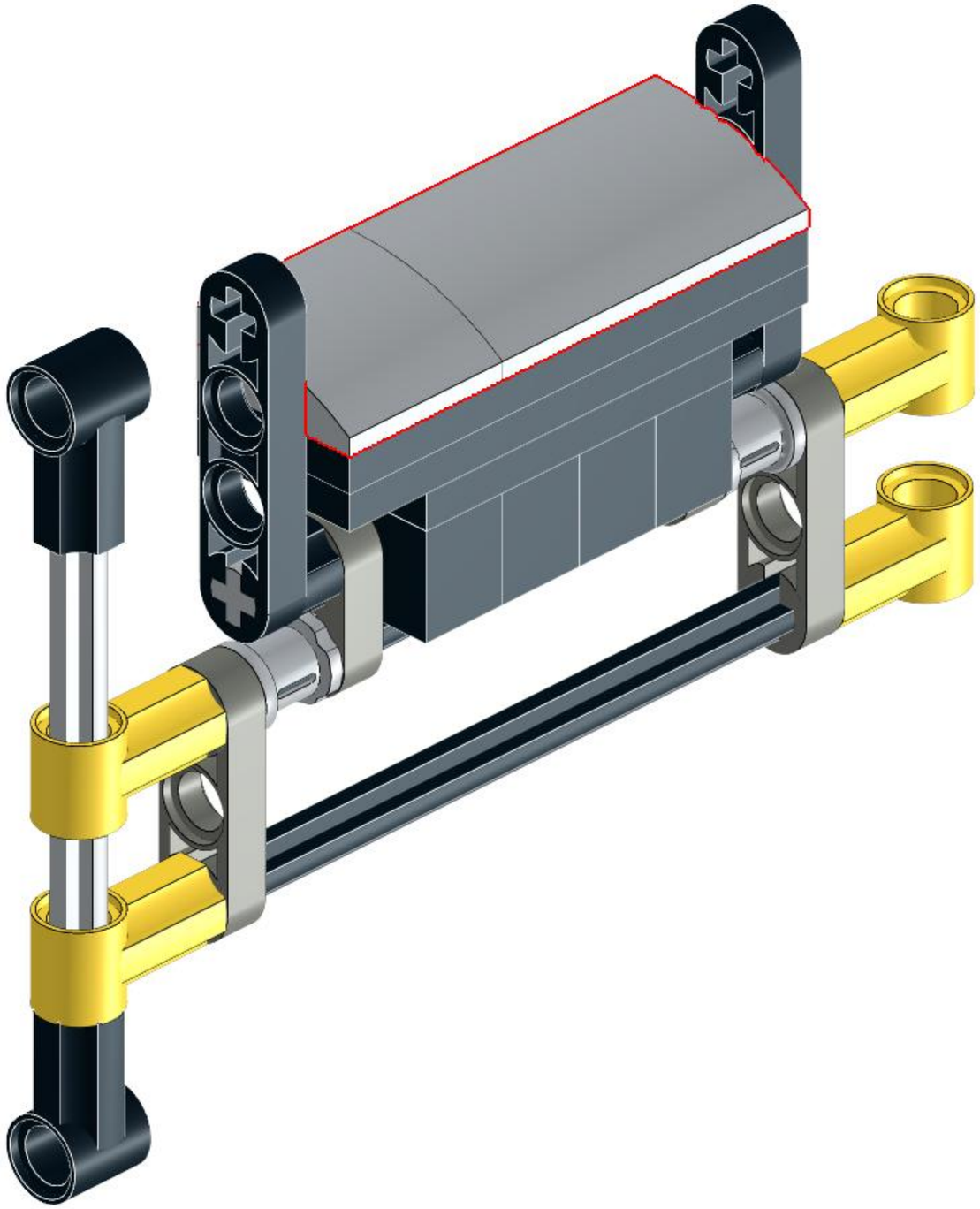

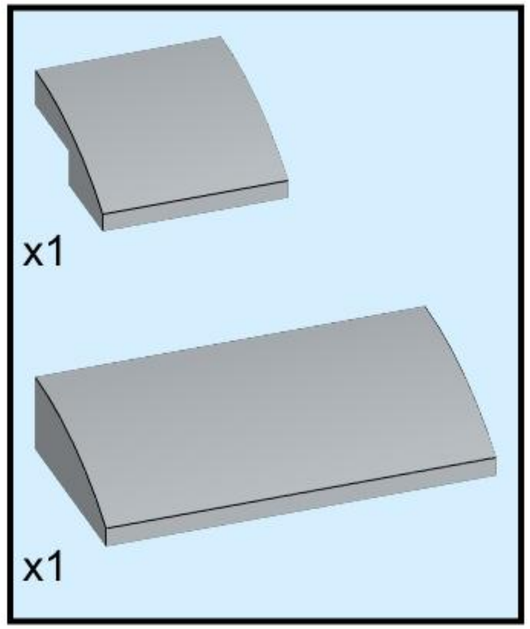

54

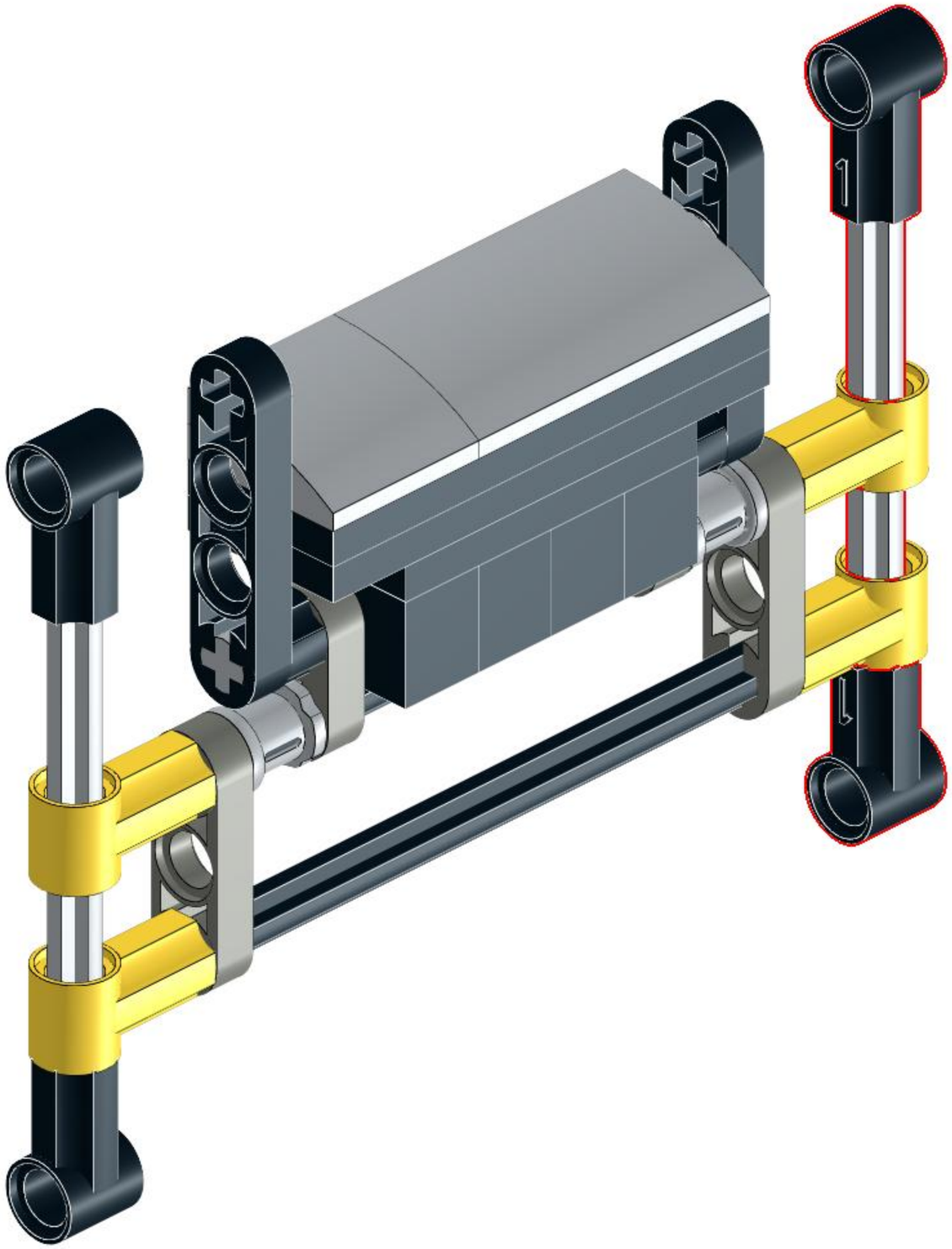

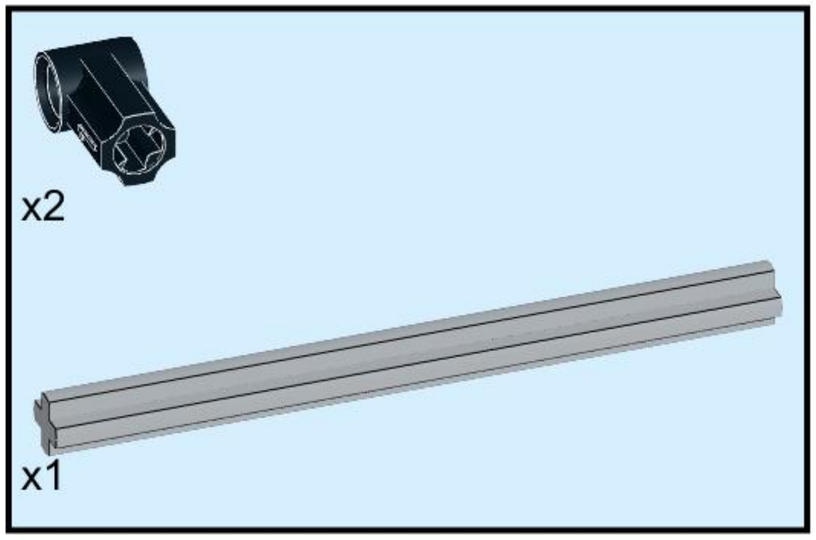

55

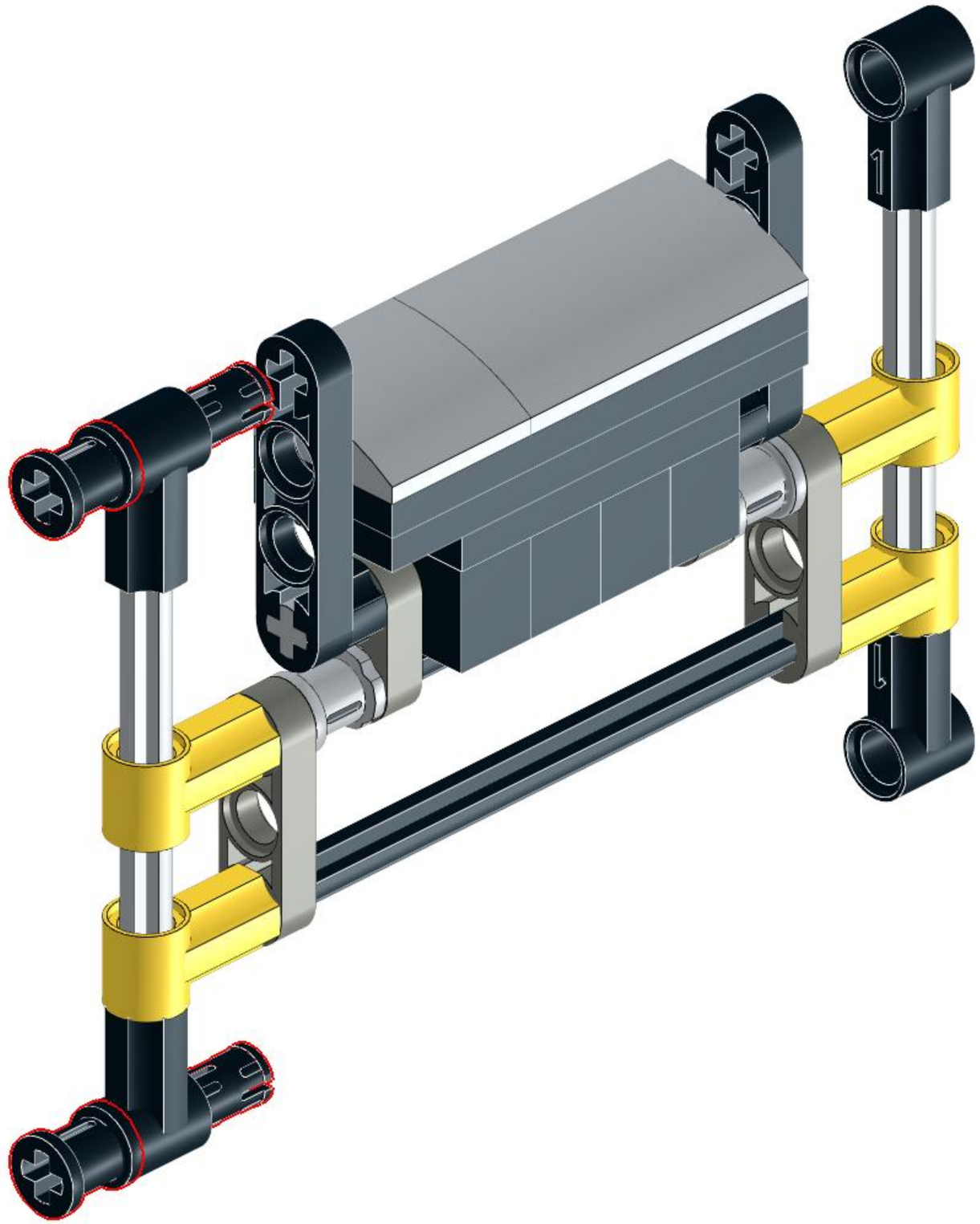

56

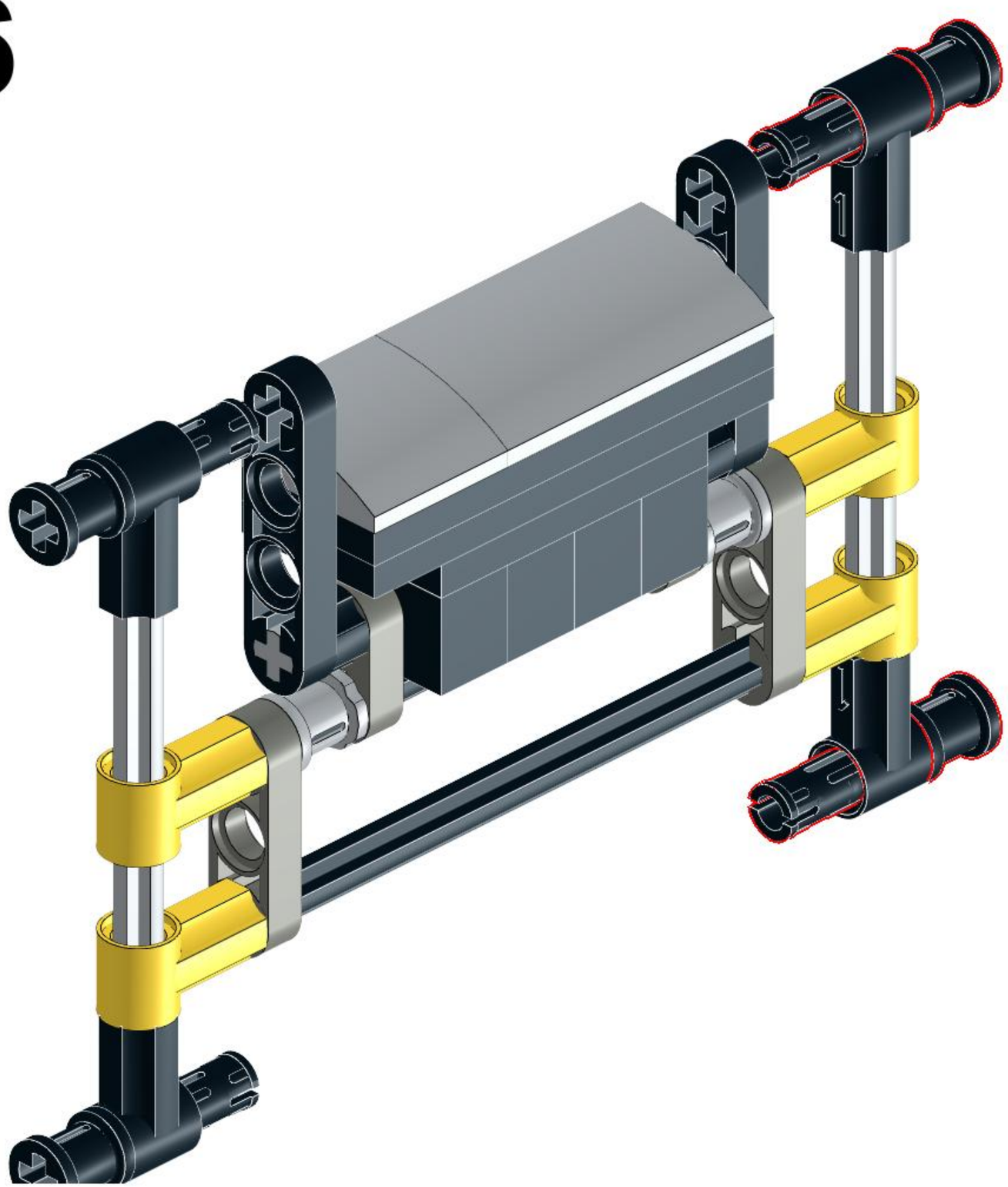

57

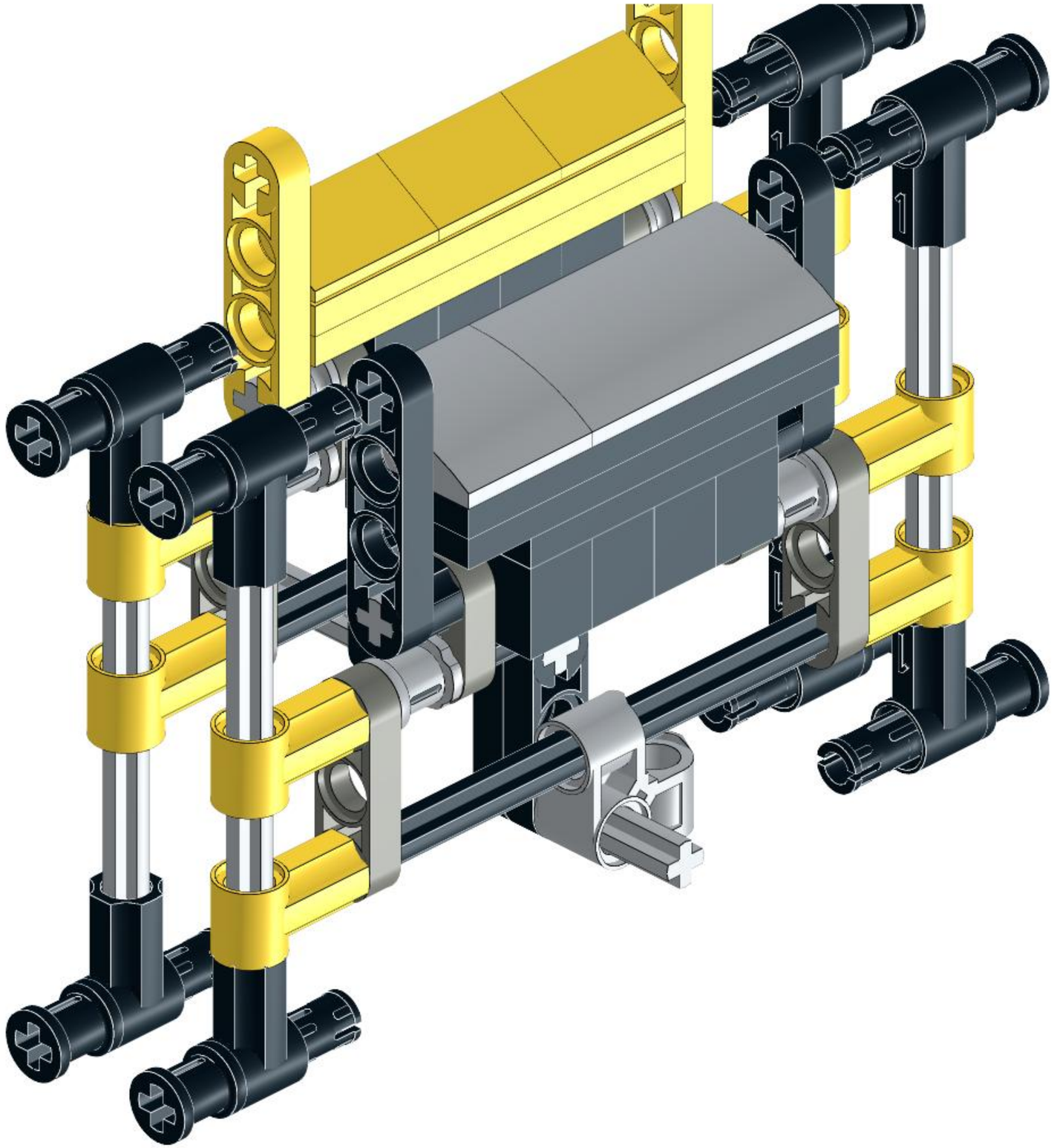

58

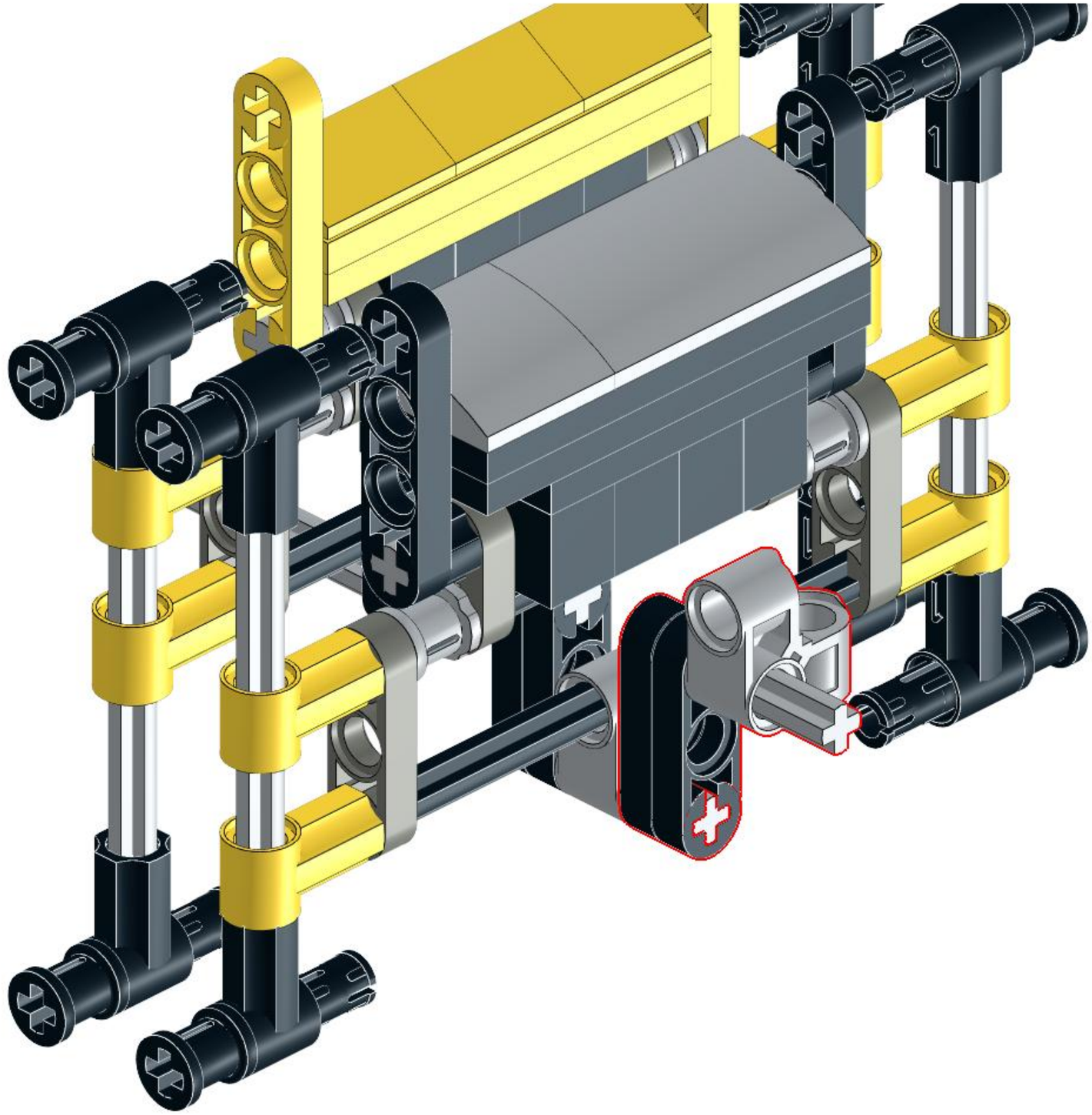

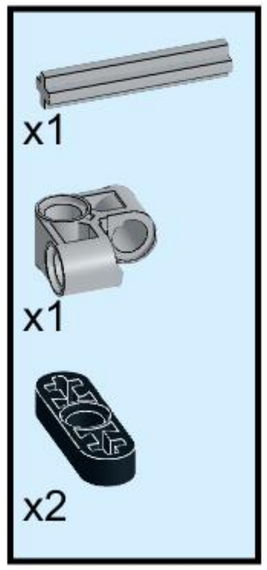

59

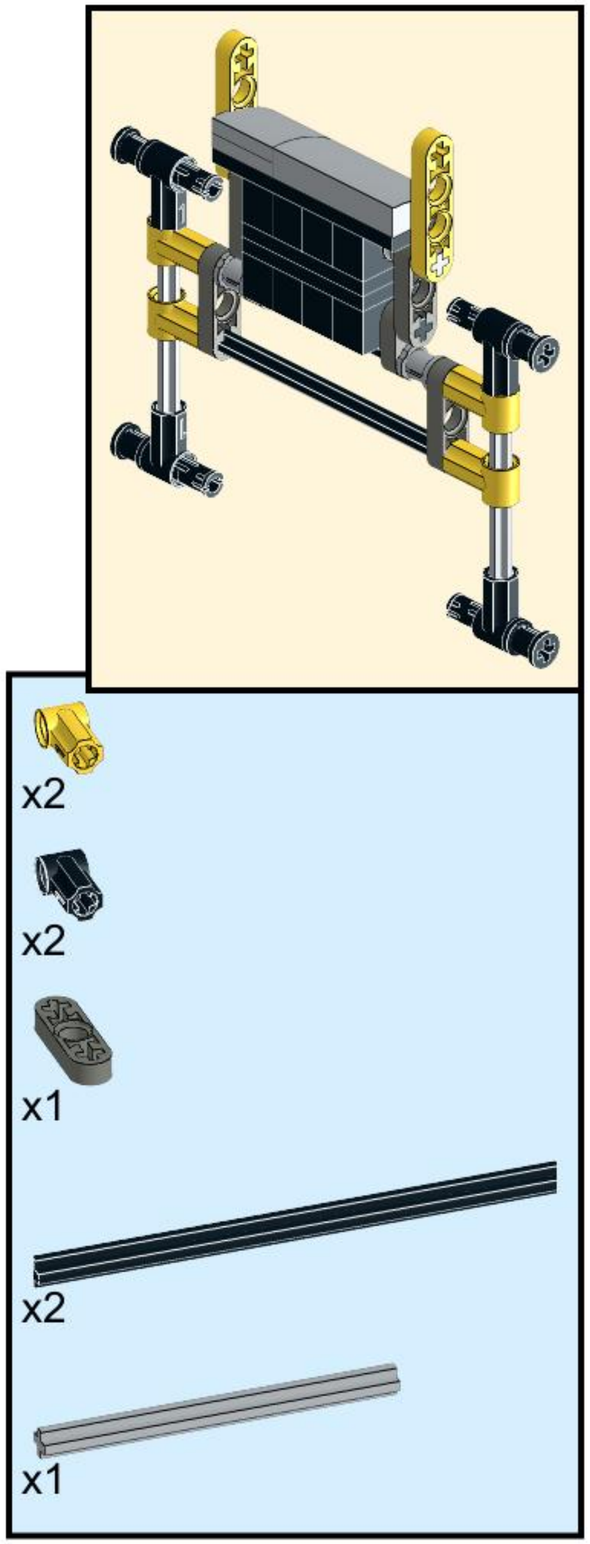

60

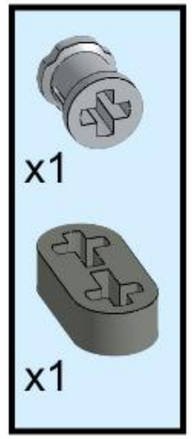

61

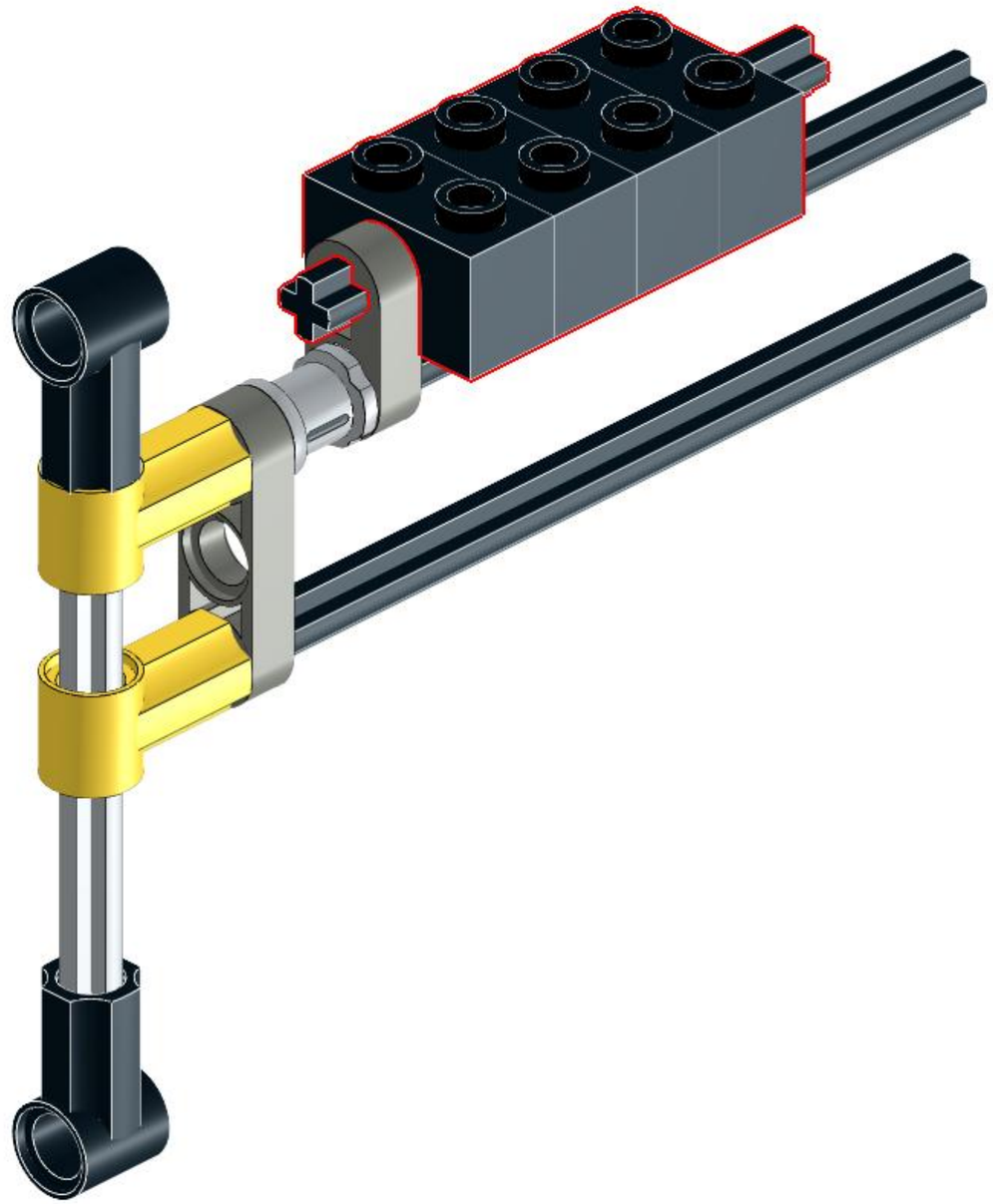

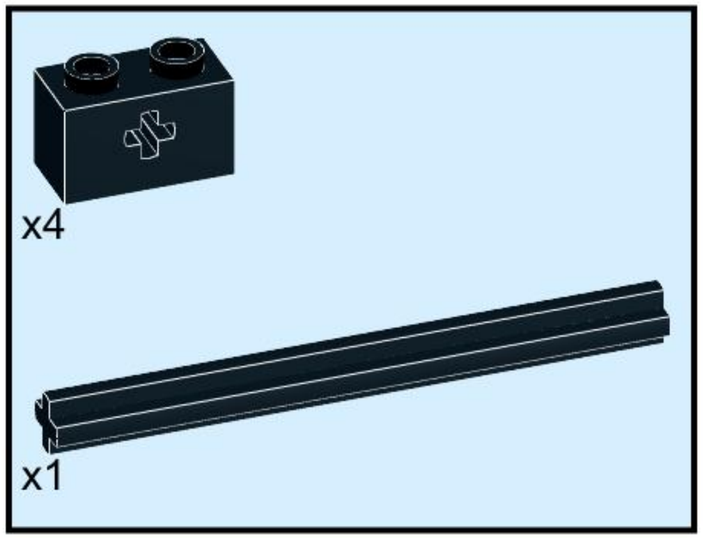

62

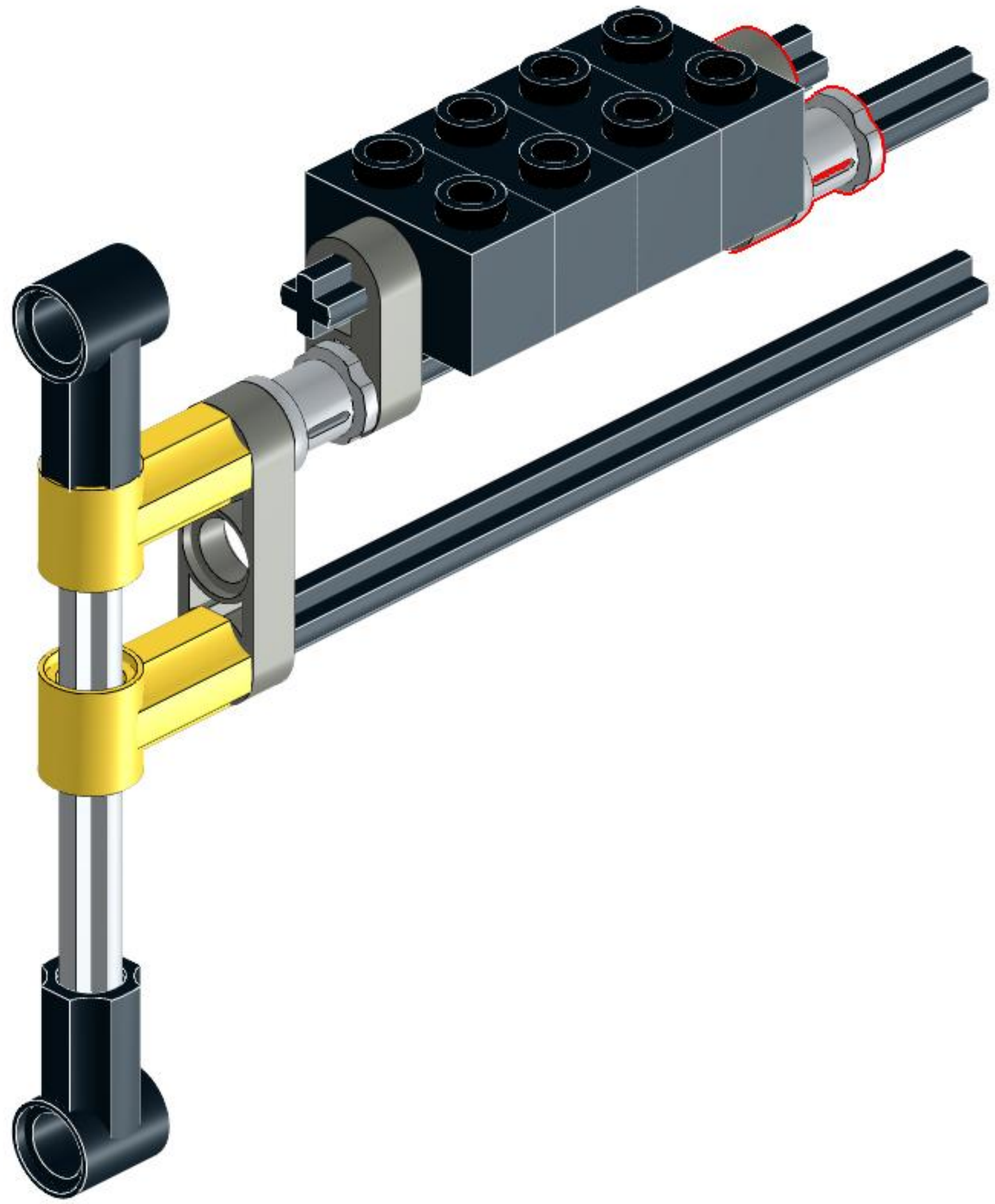

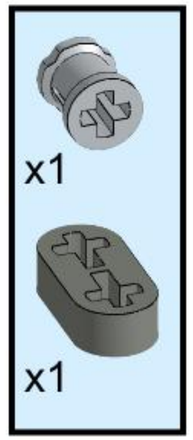

63

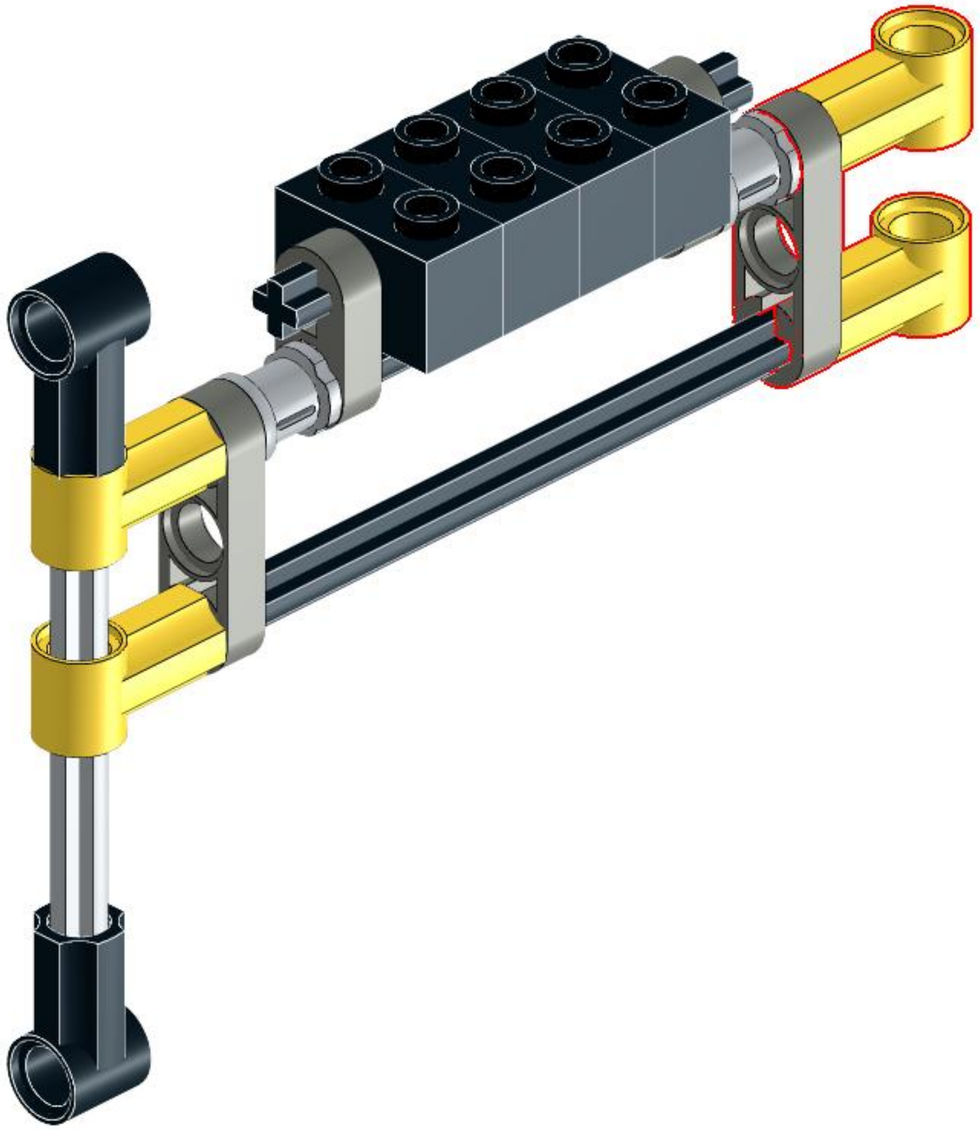

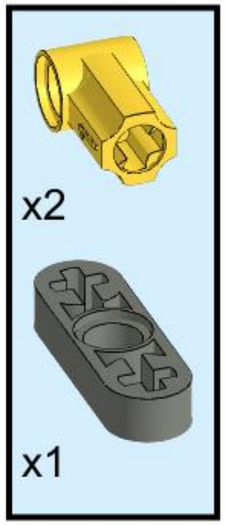

64

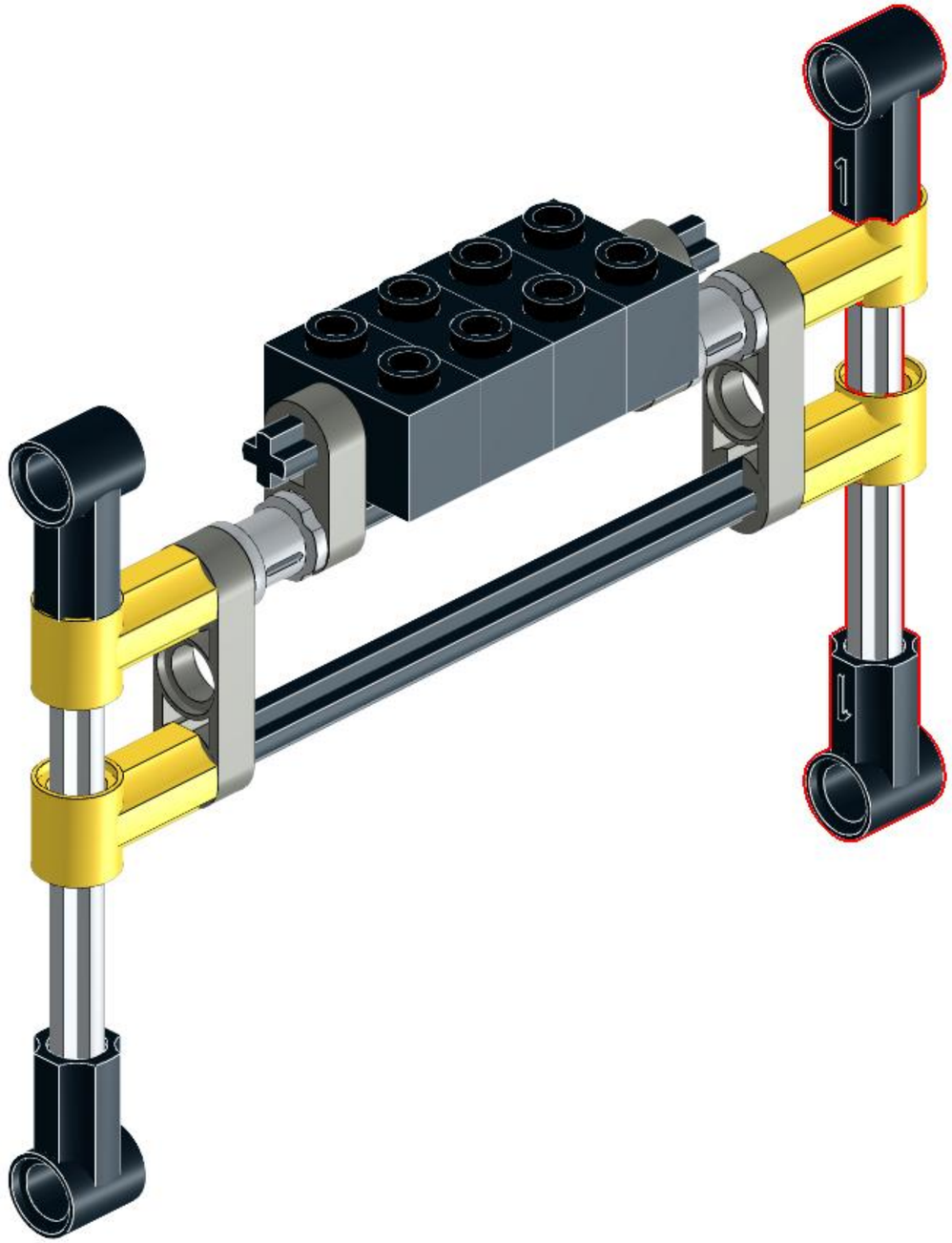

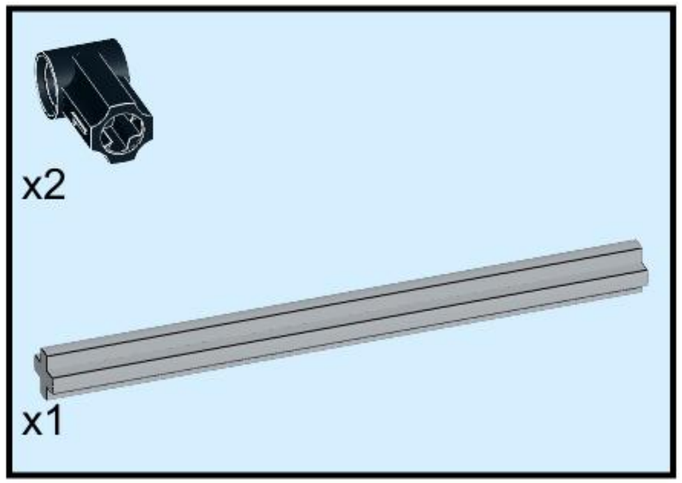

65

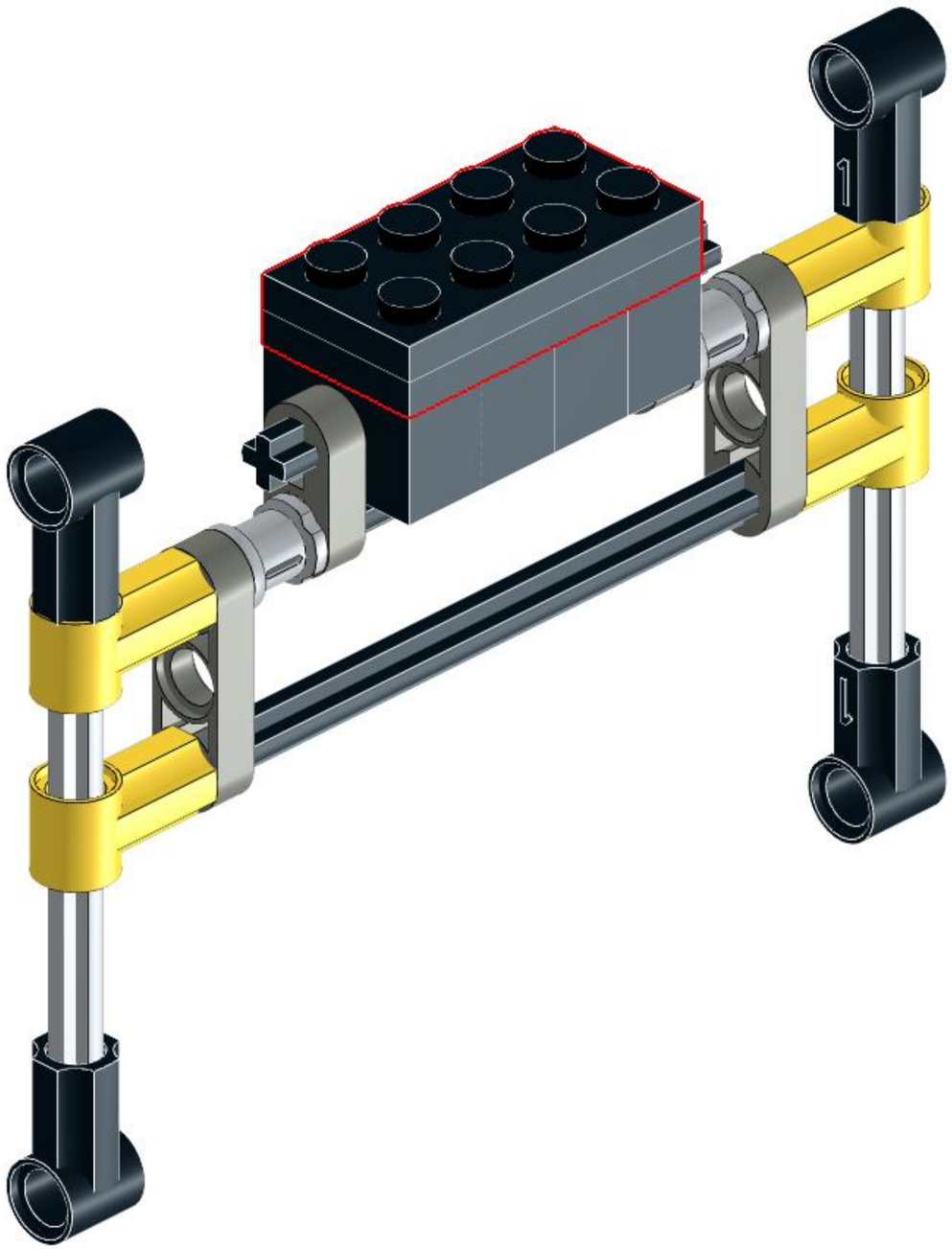

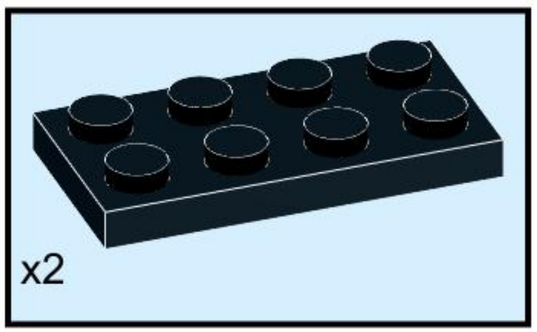

66

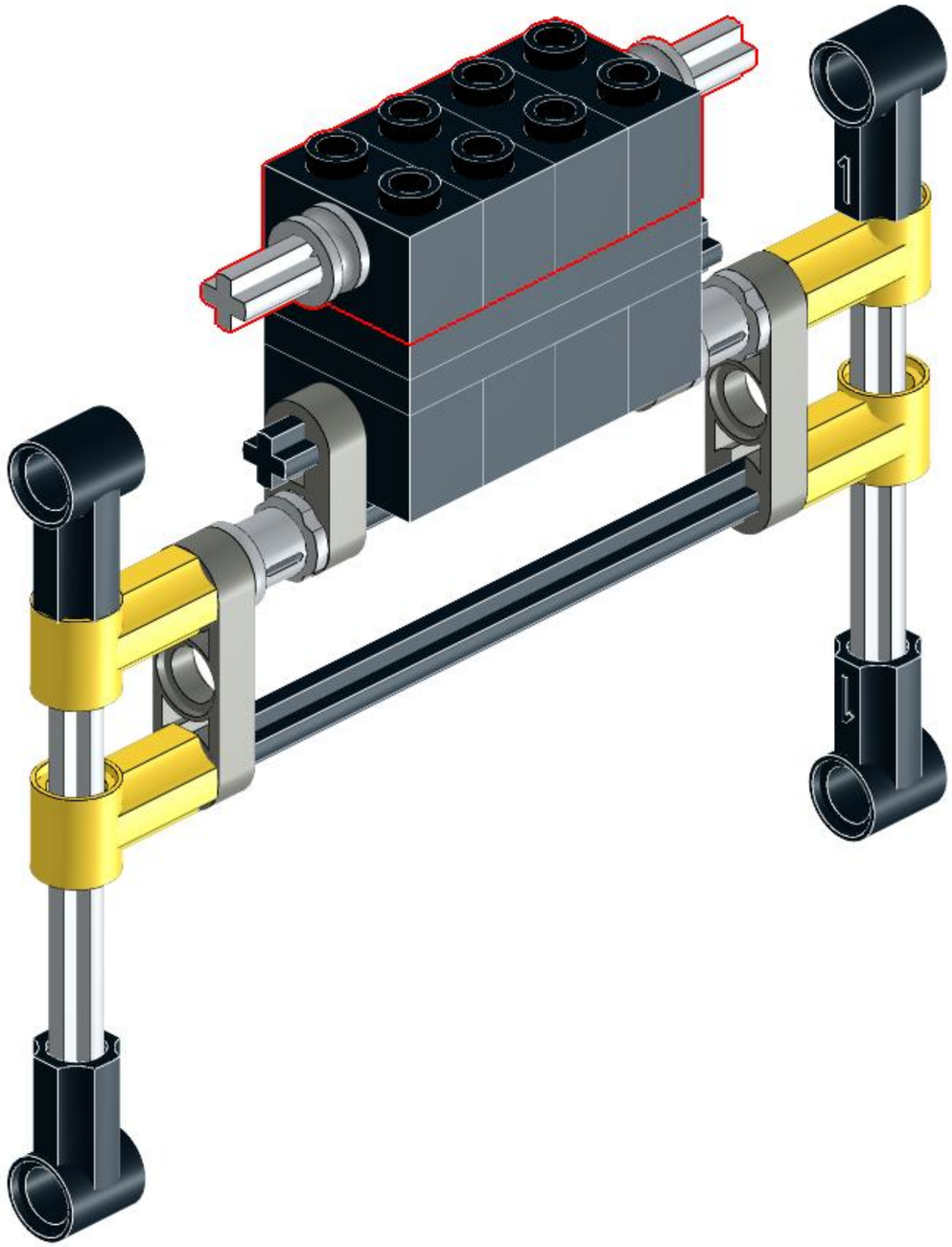

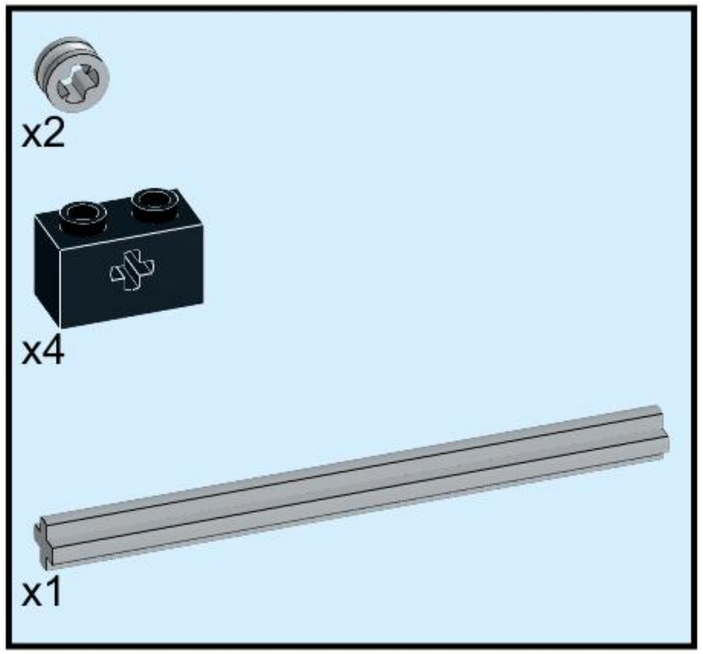

67

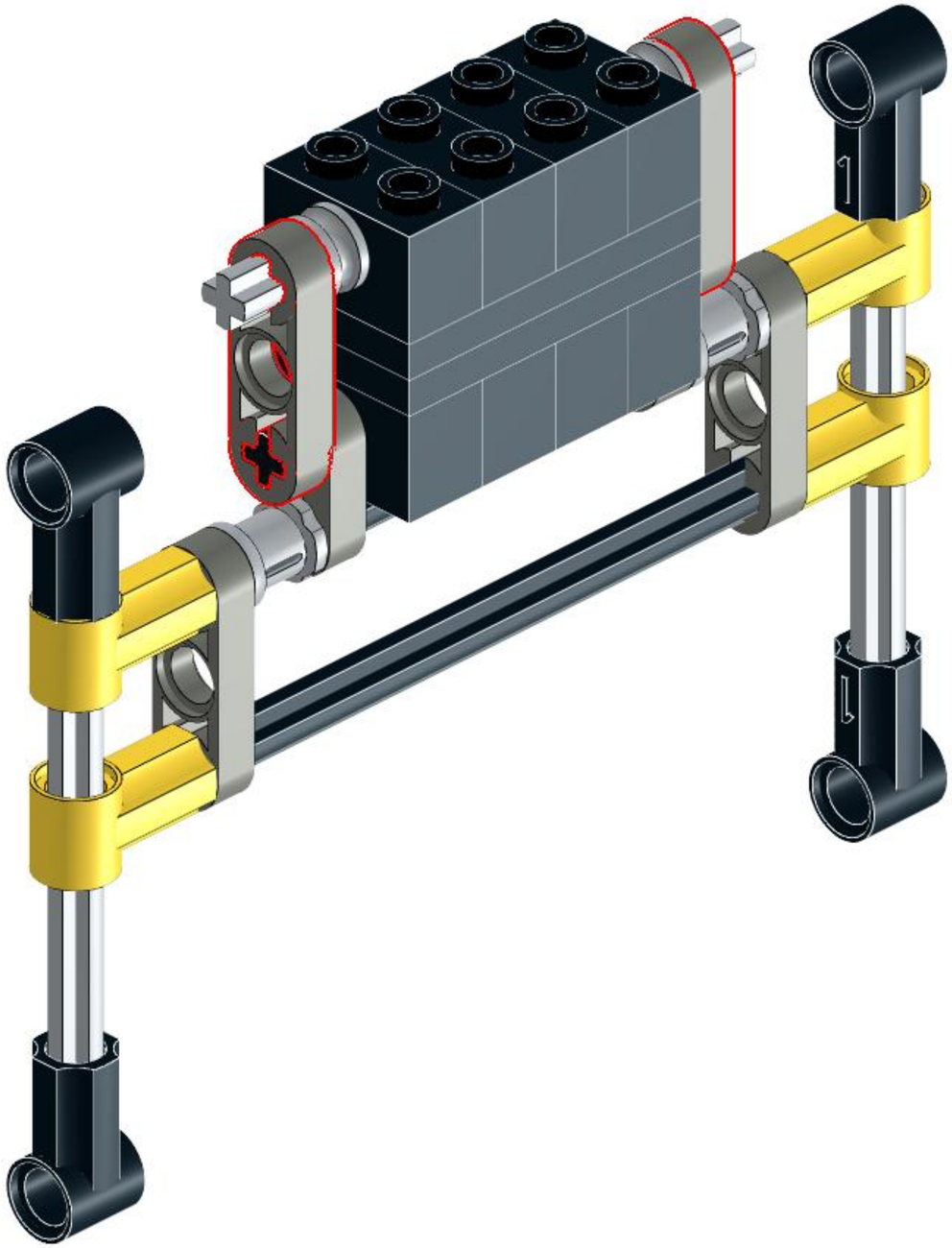

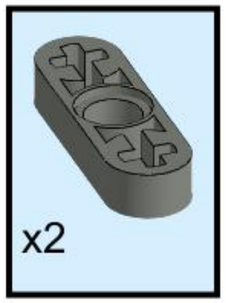

68

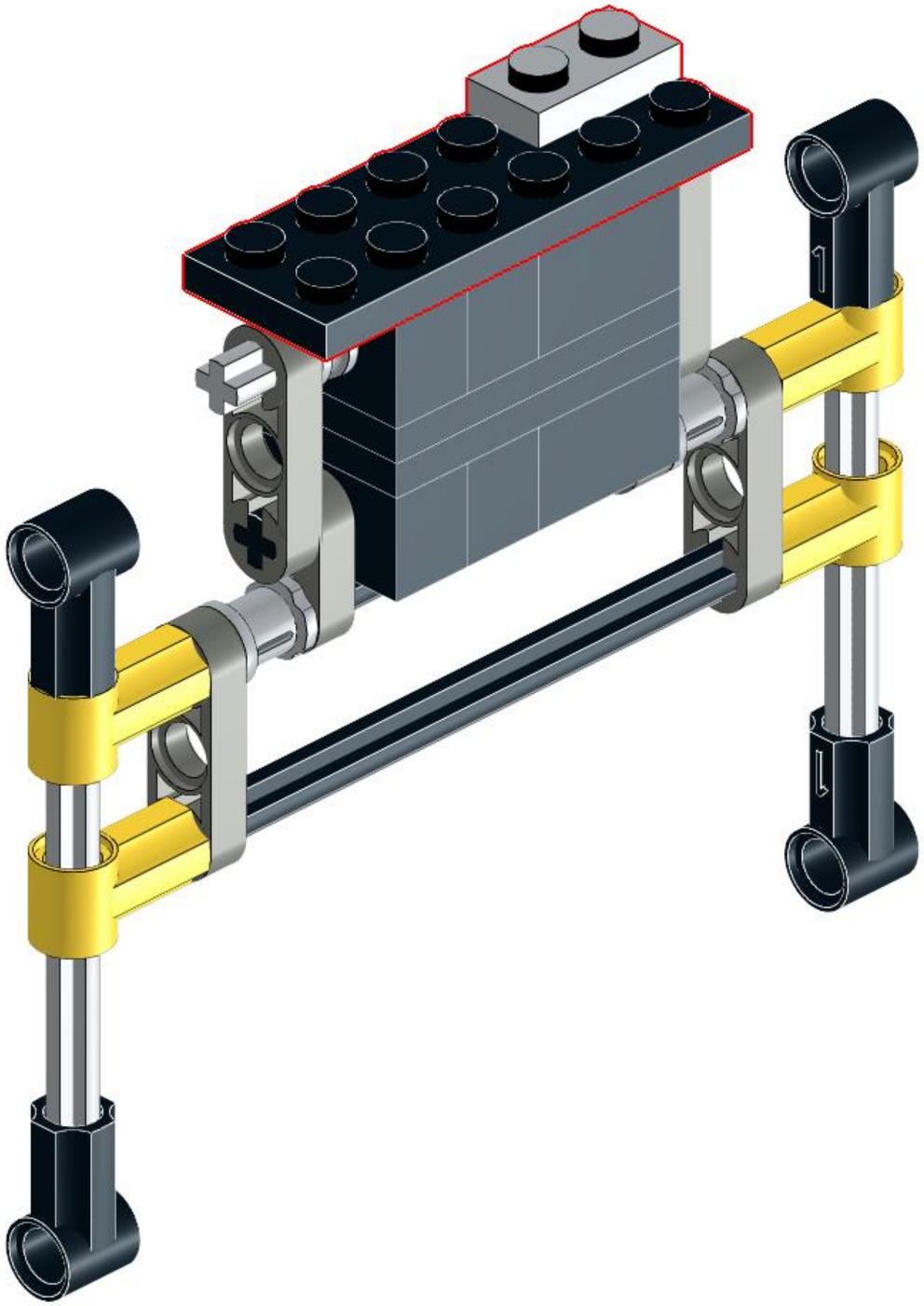

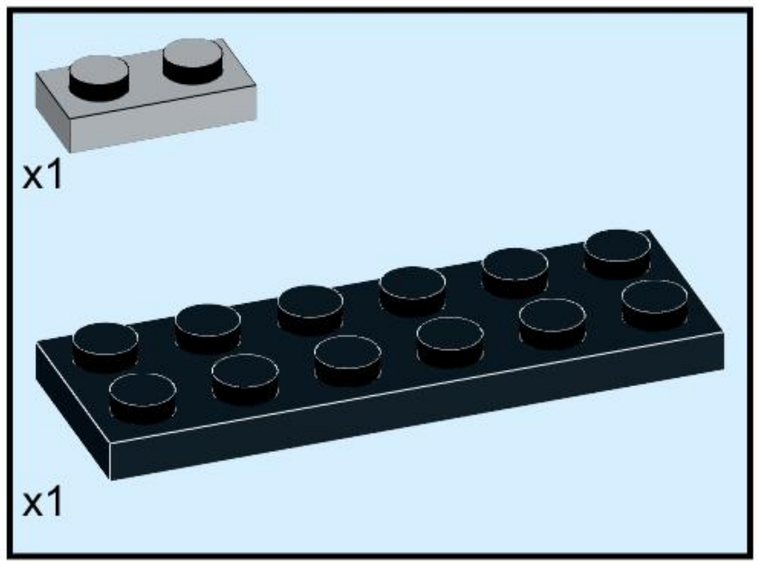

69

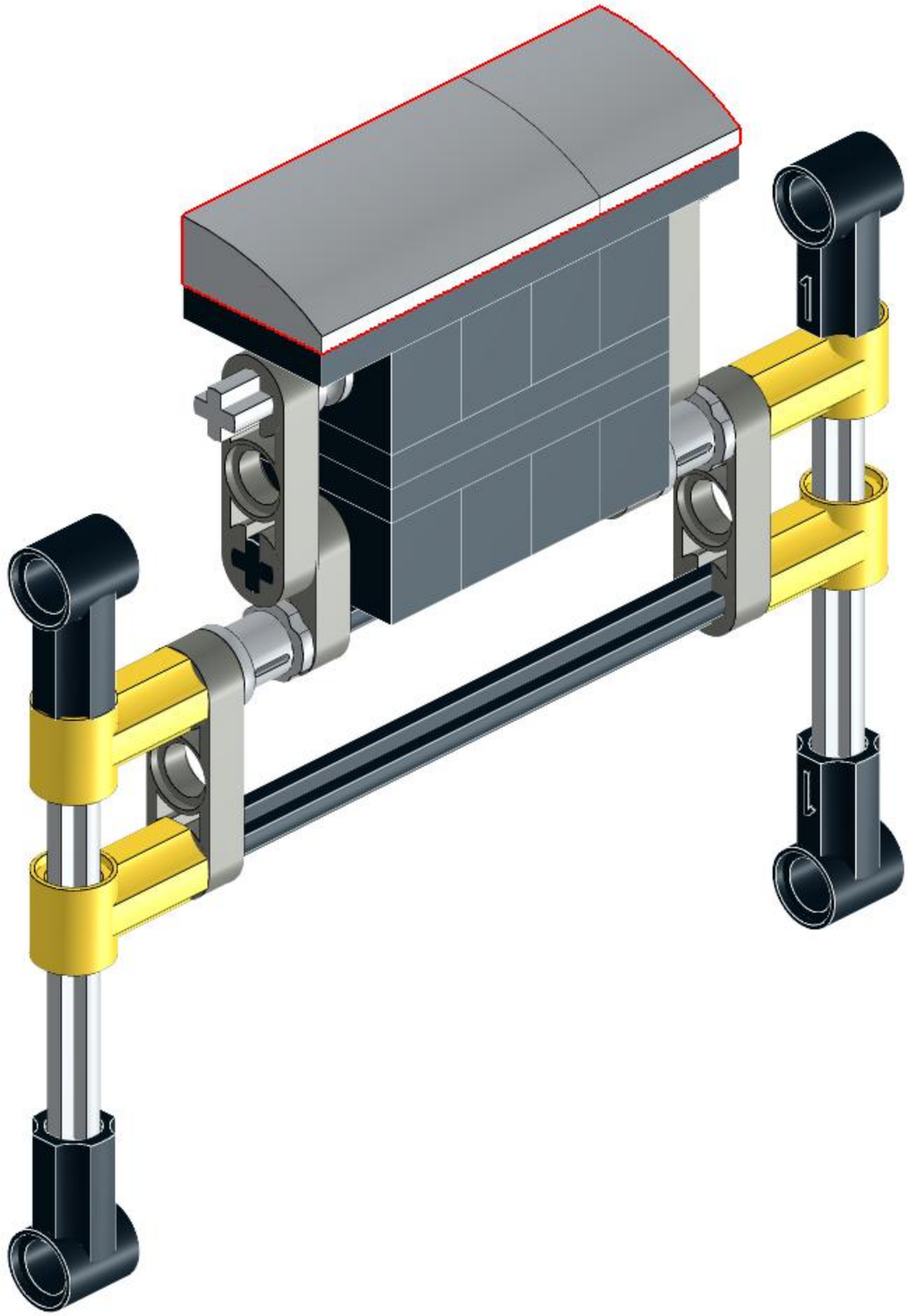

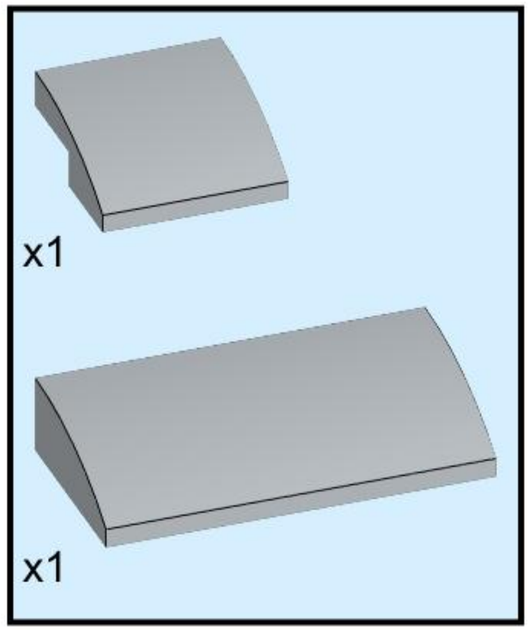

70

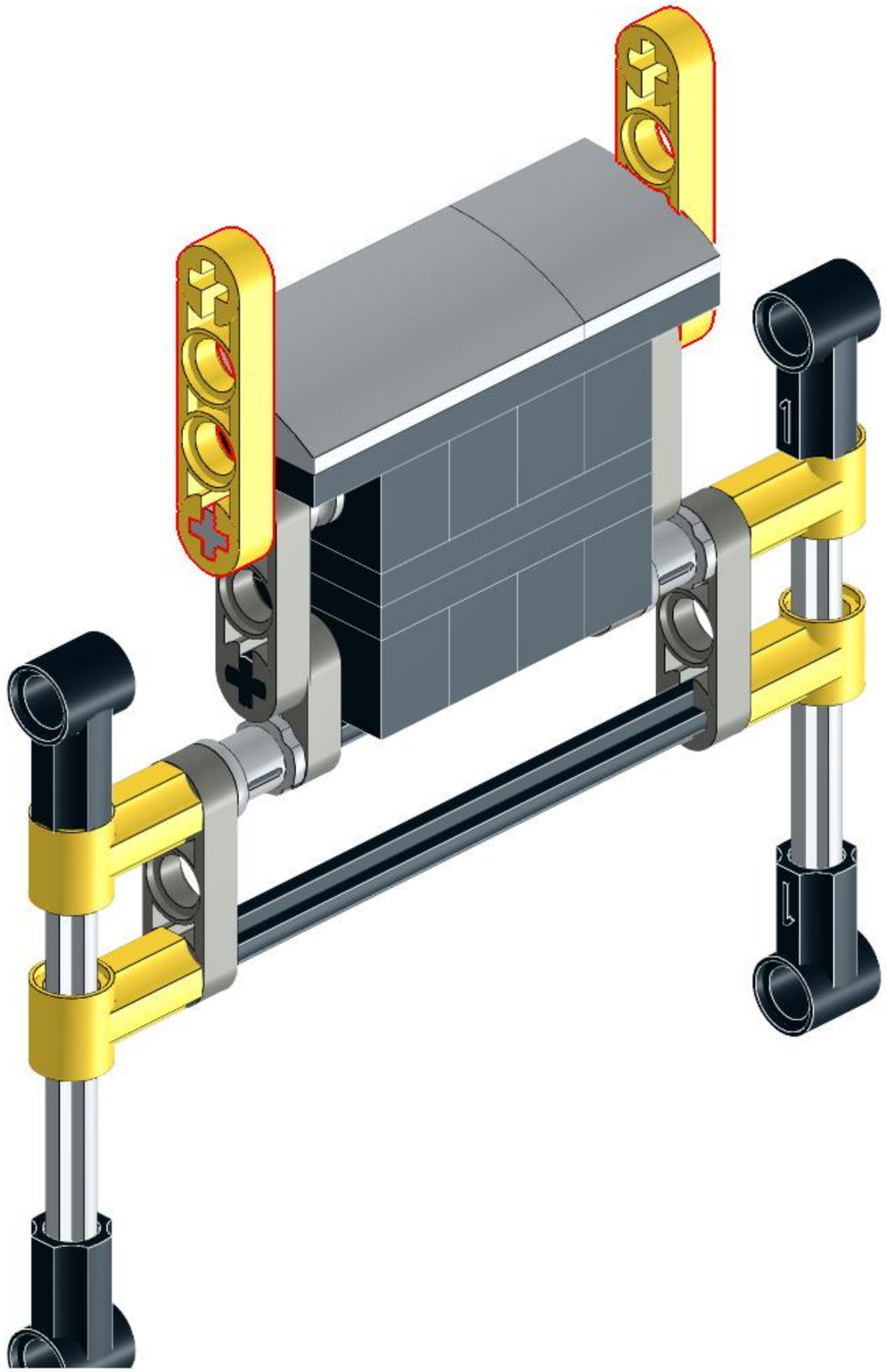

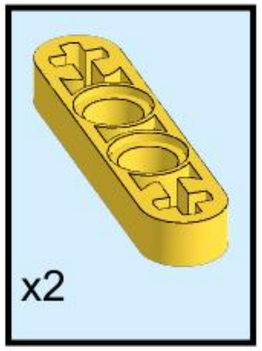

71

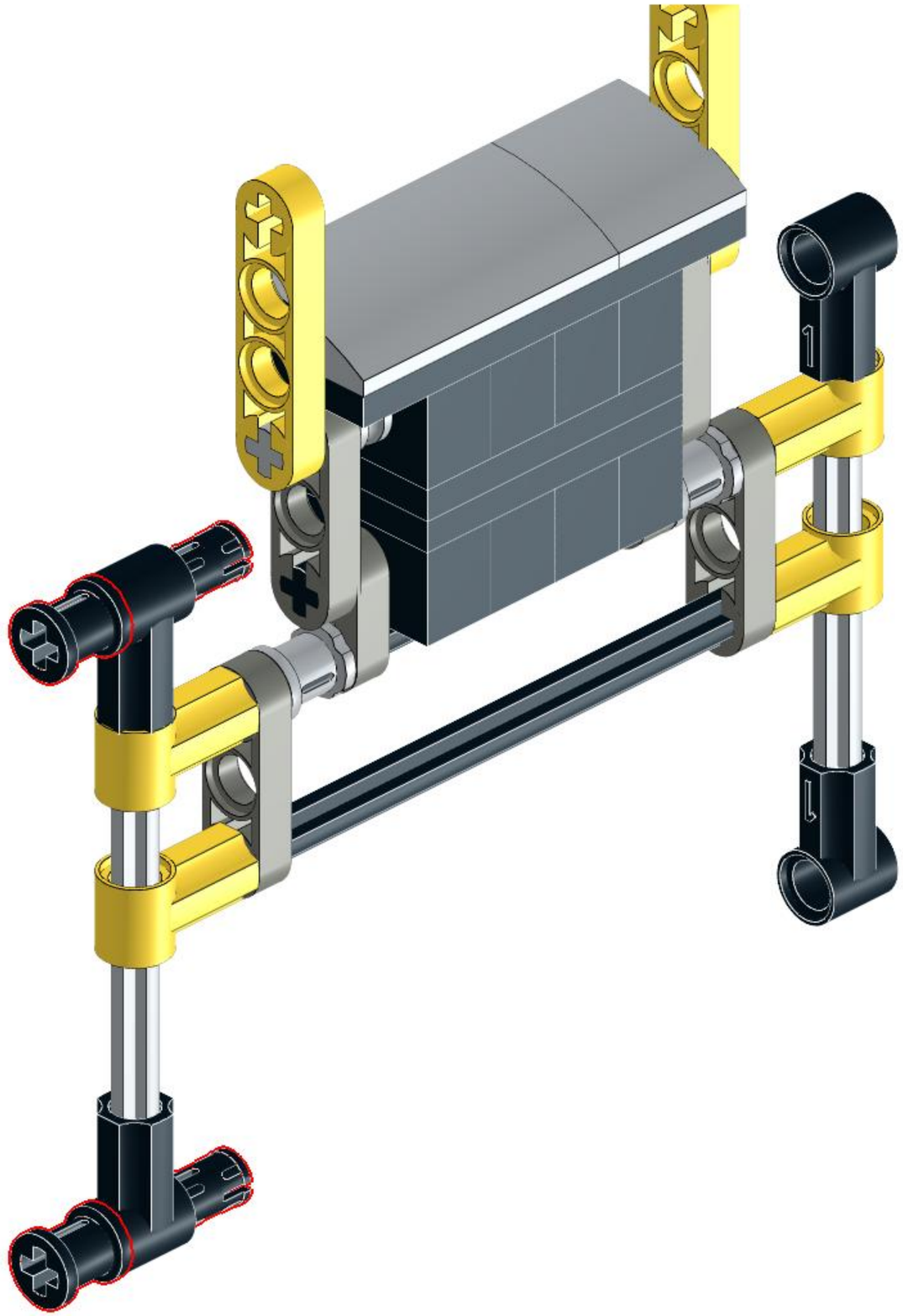

72

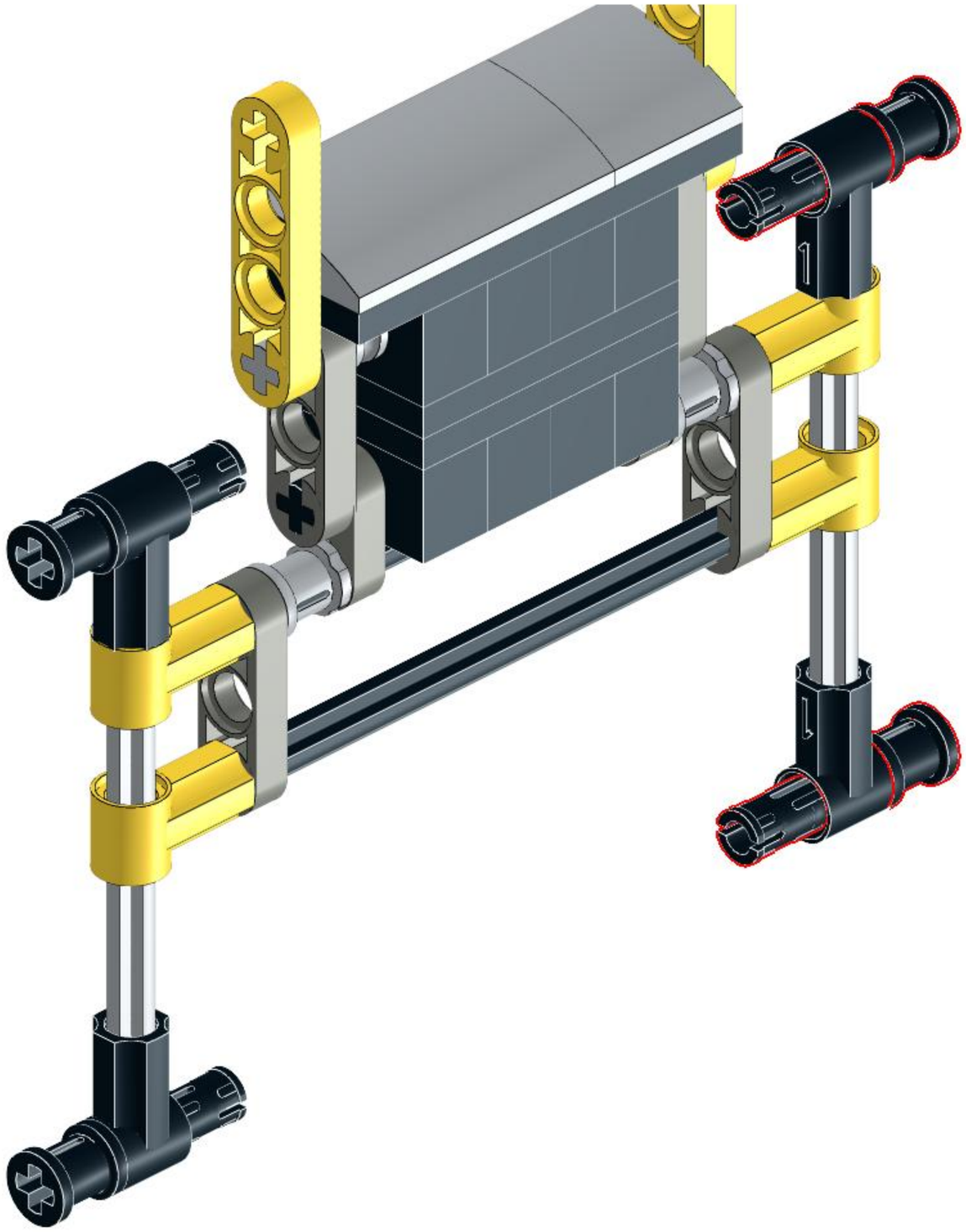

73

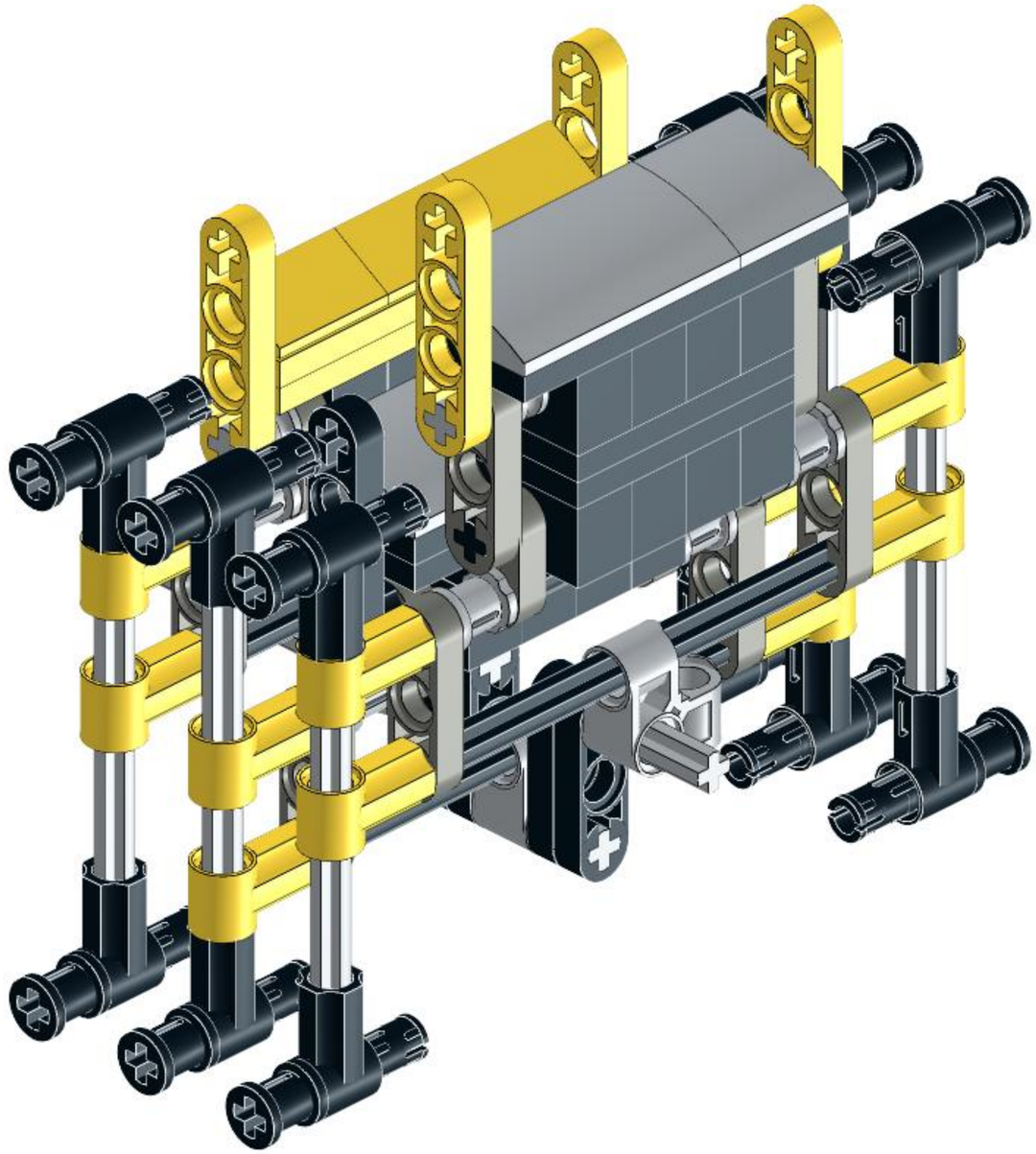

74

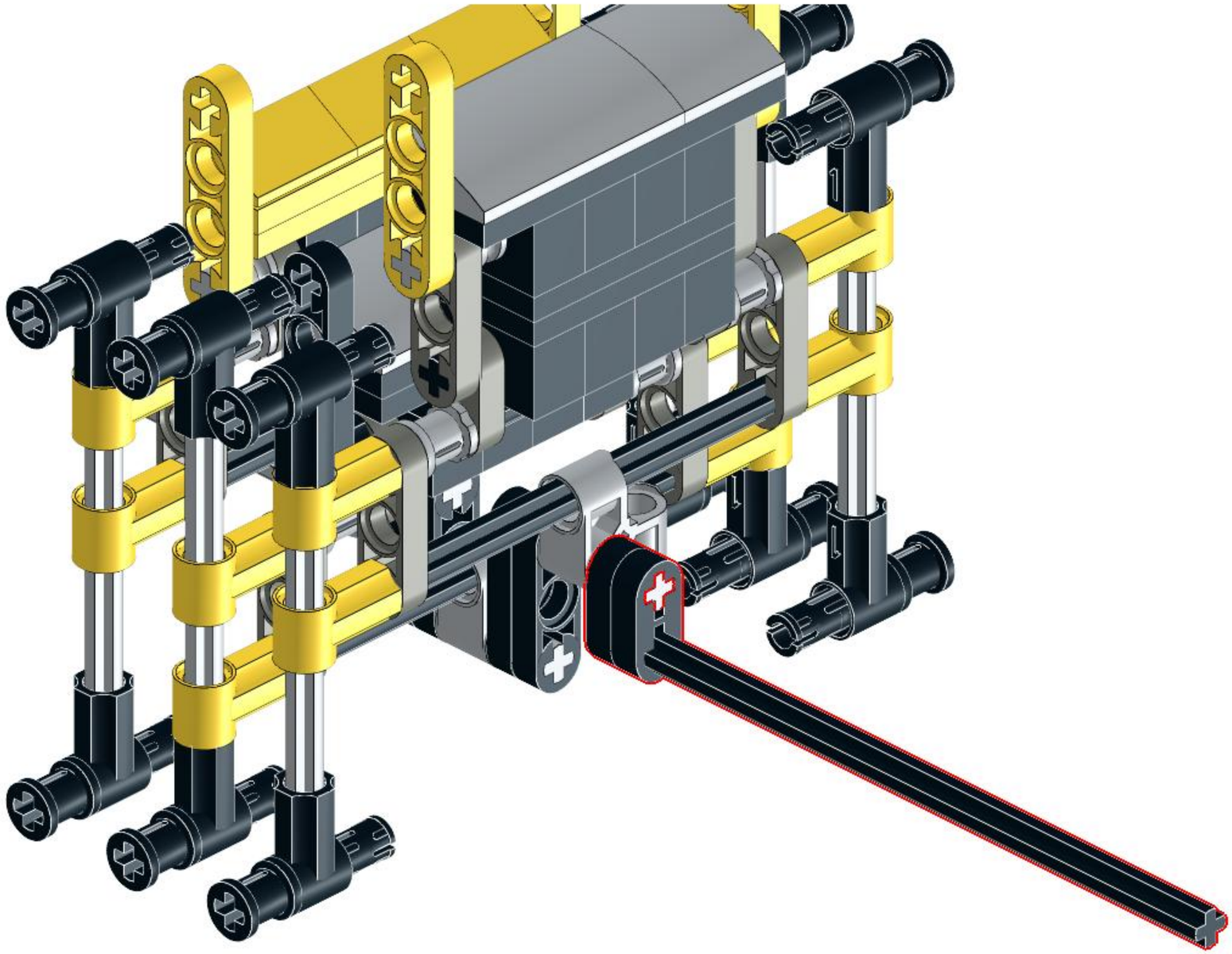

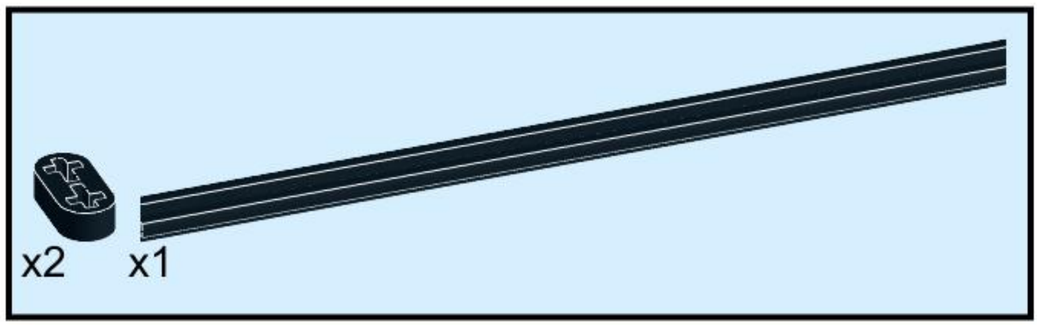

75

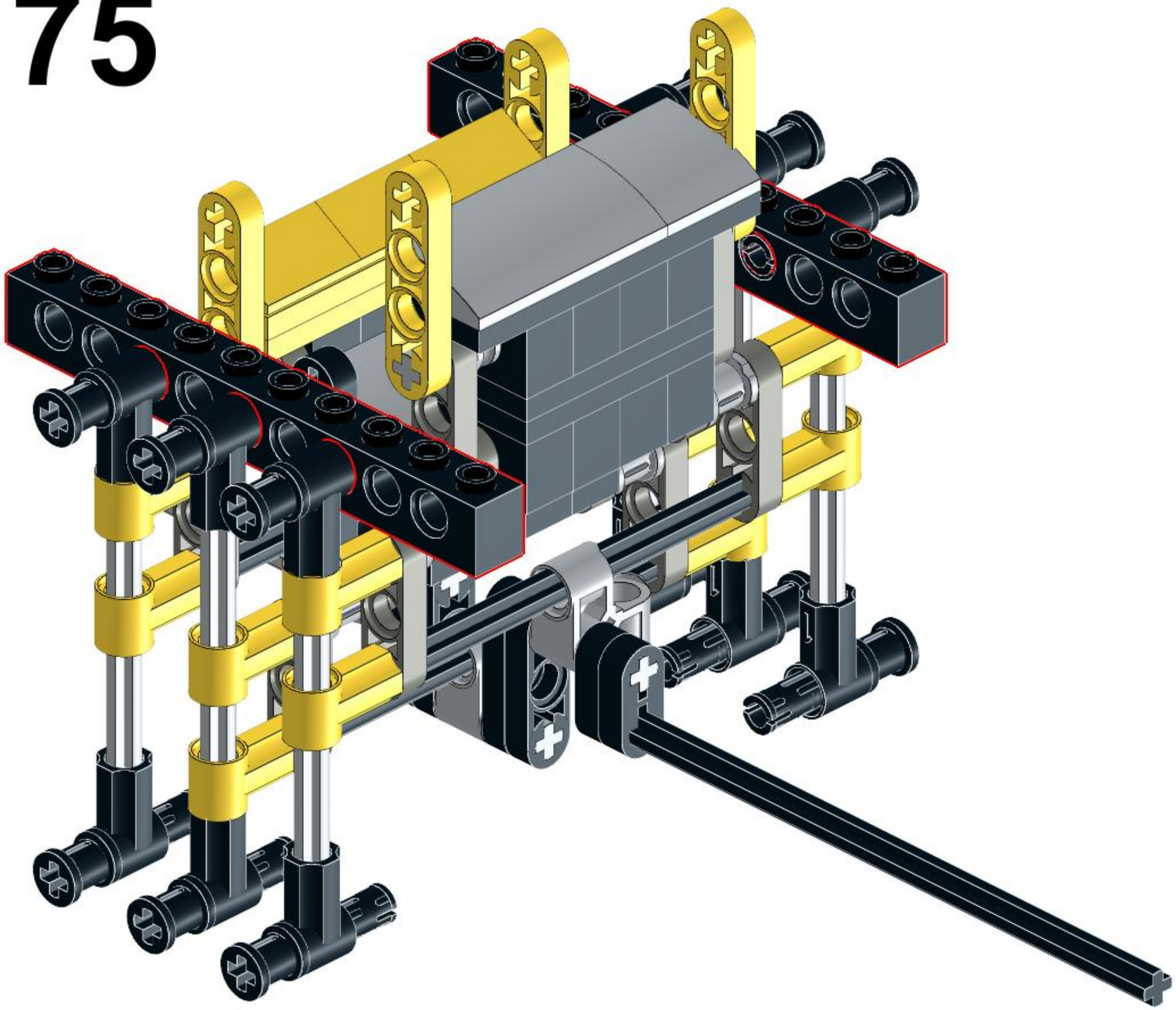

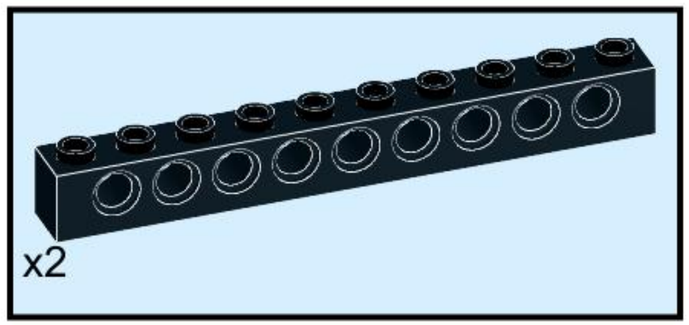

76

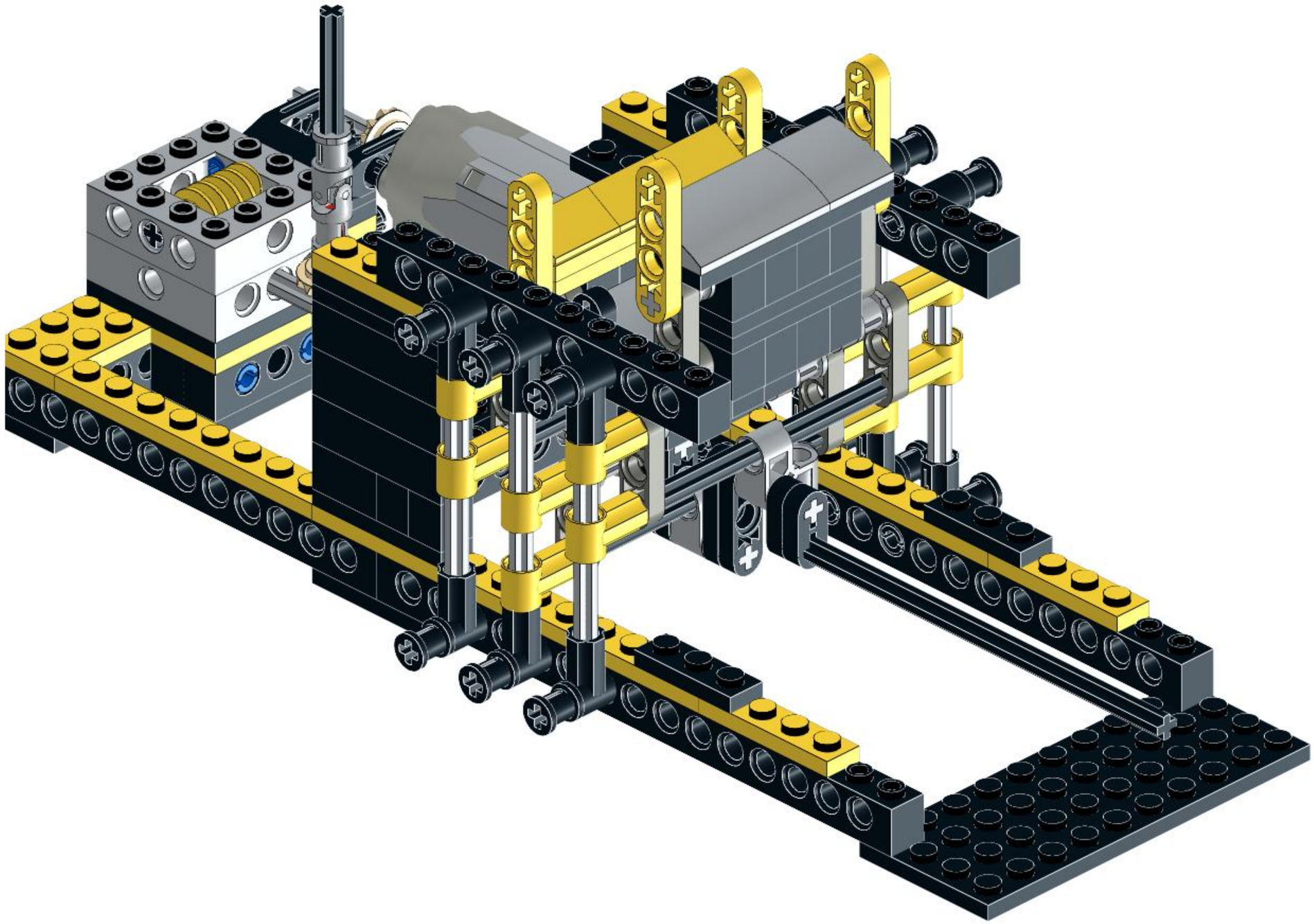

77

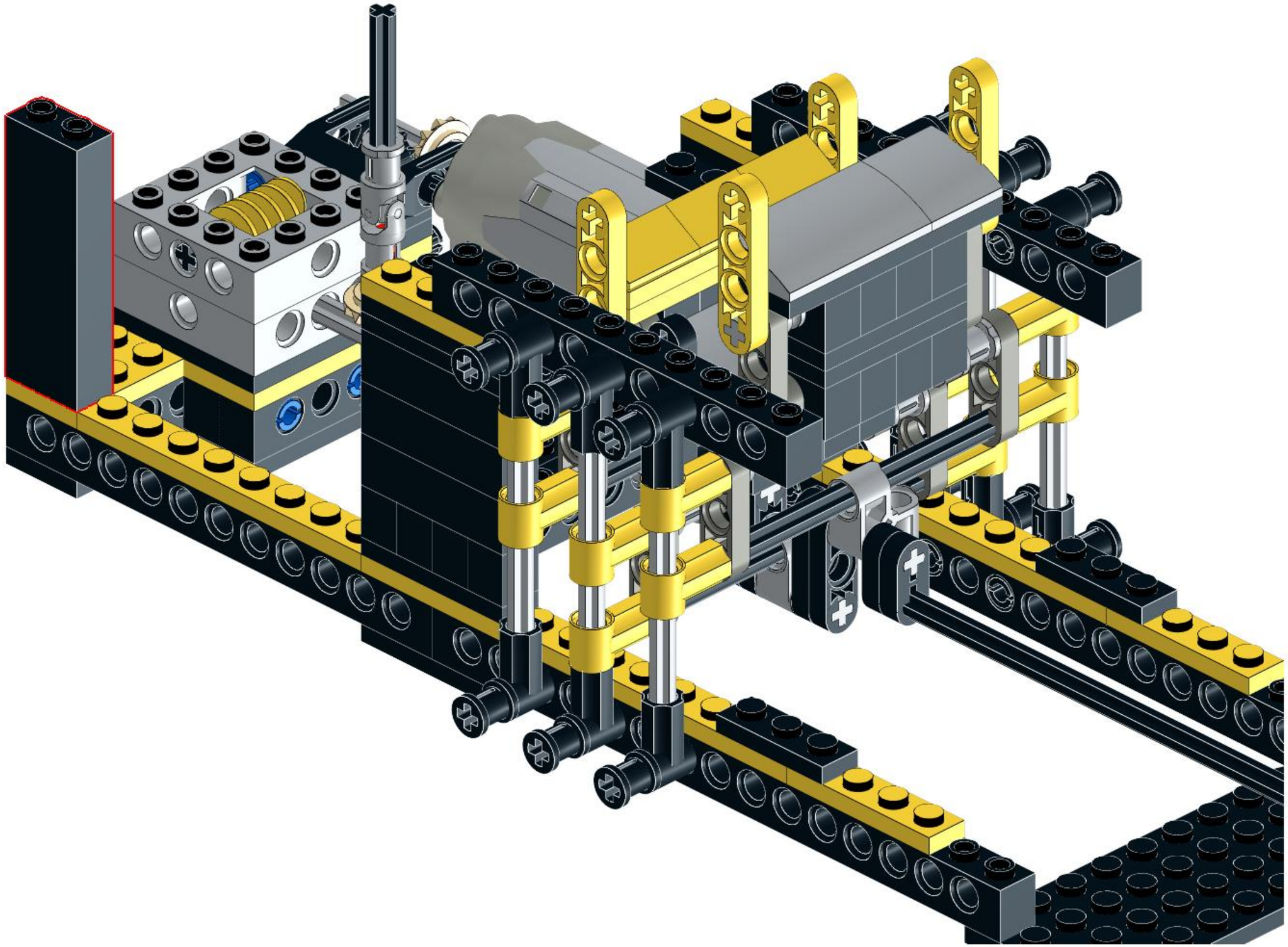

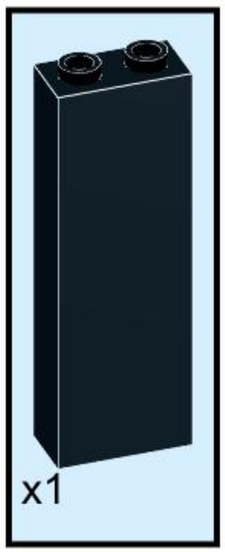

78

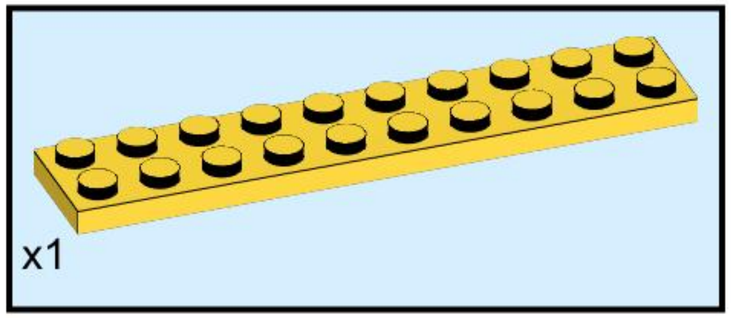

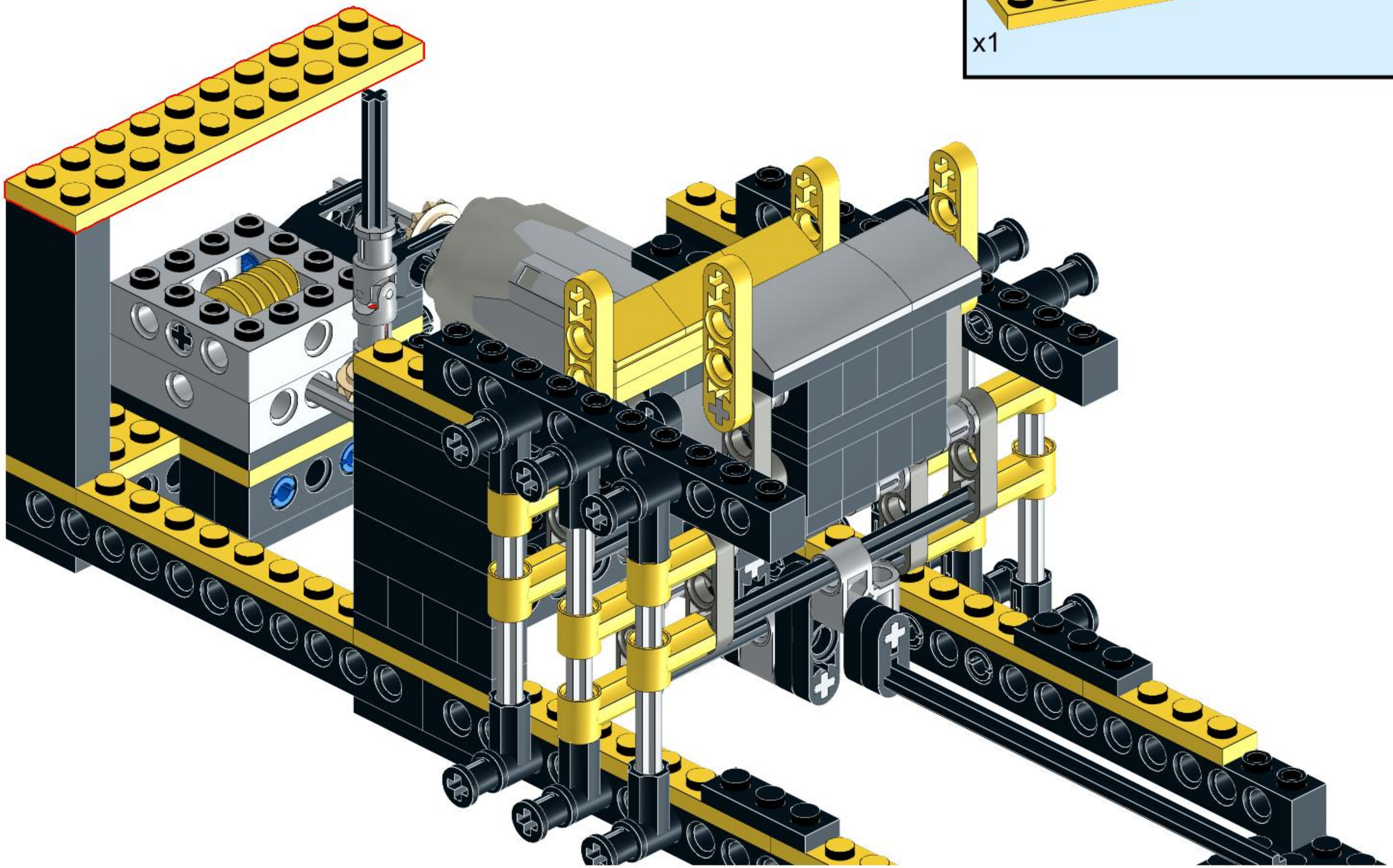

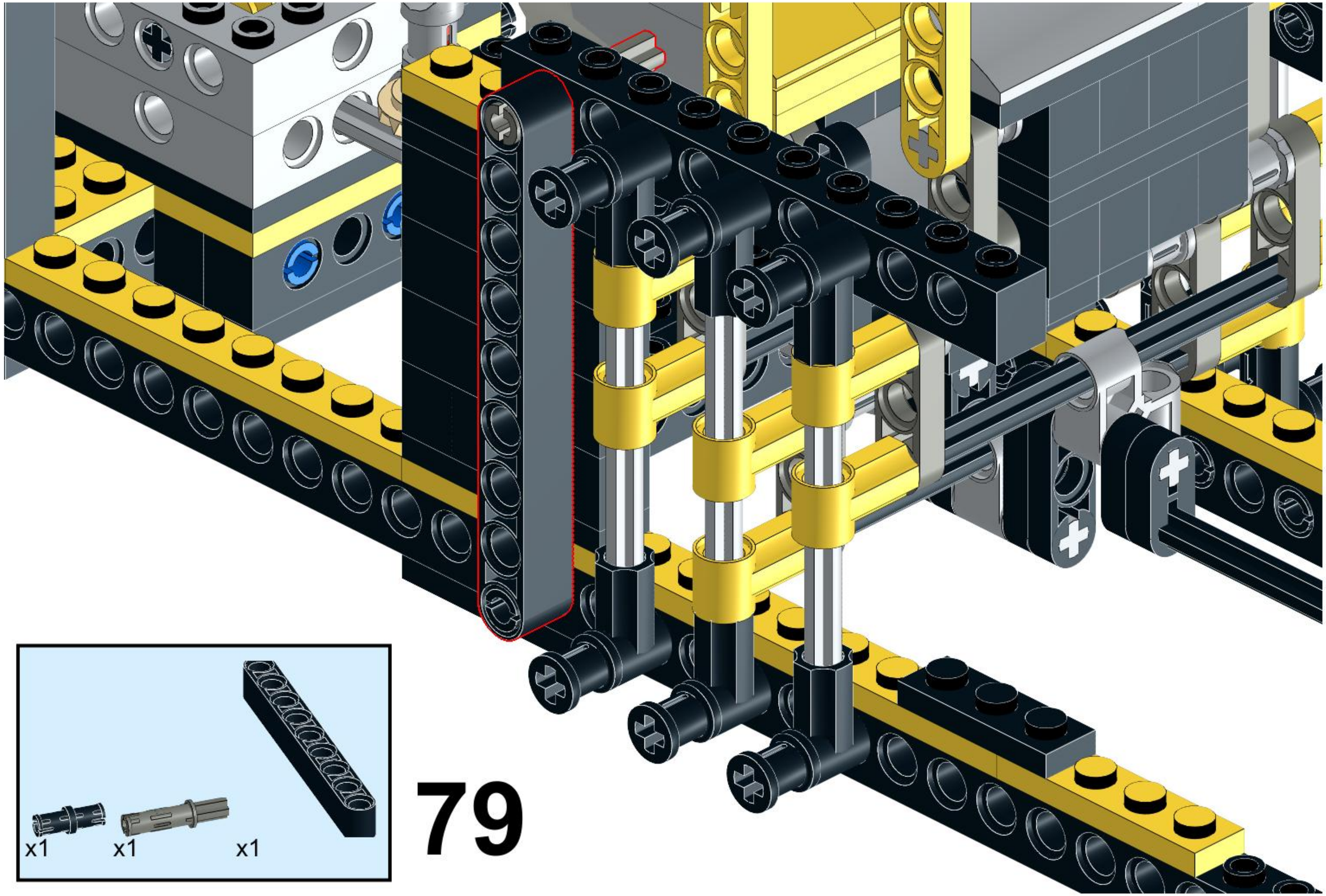

79

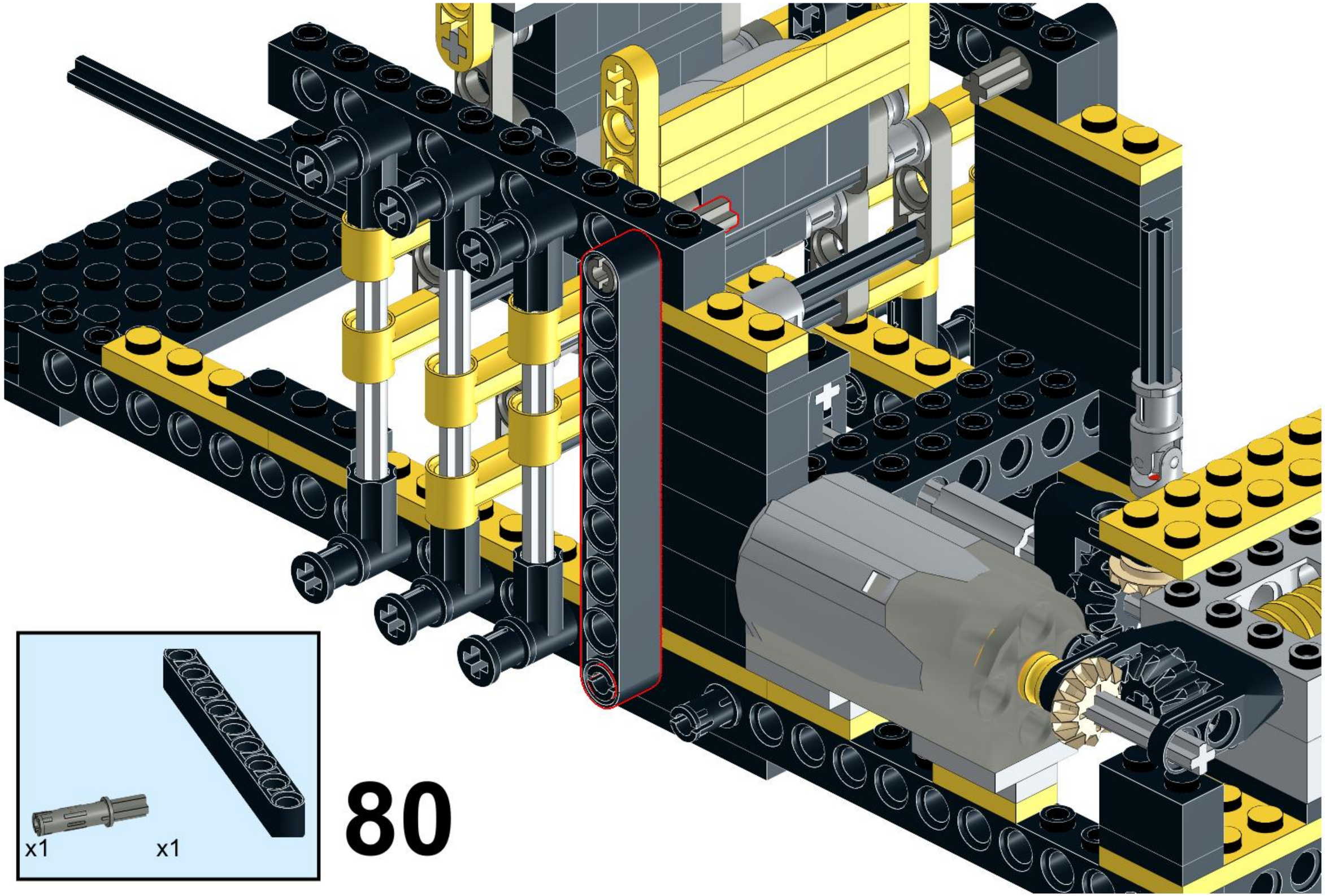

80

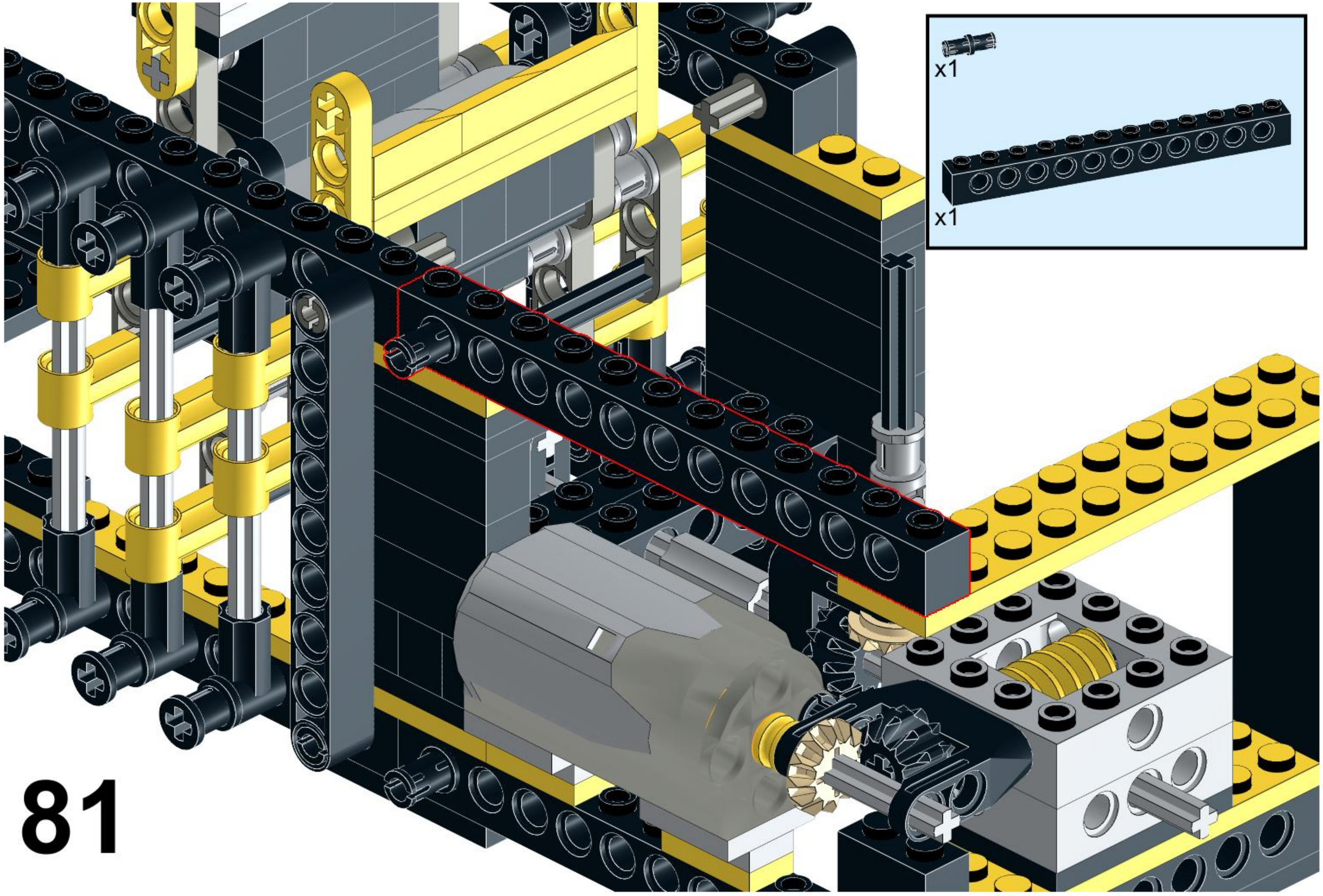
x1
x1
81

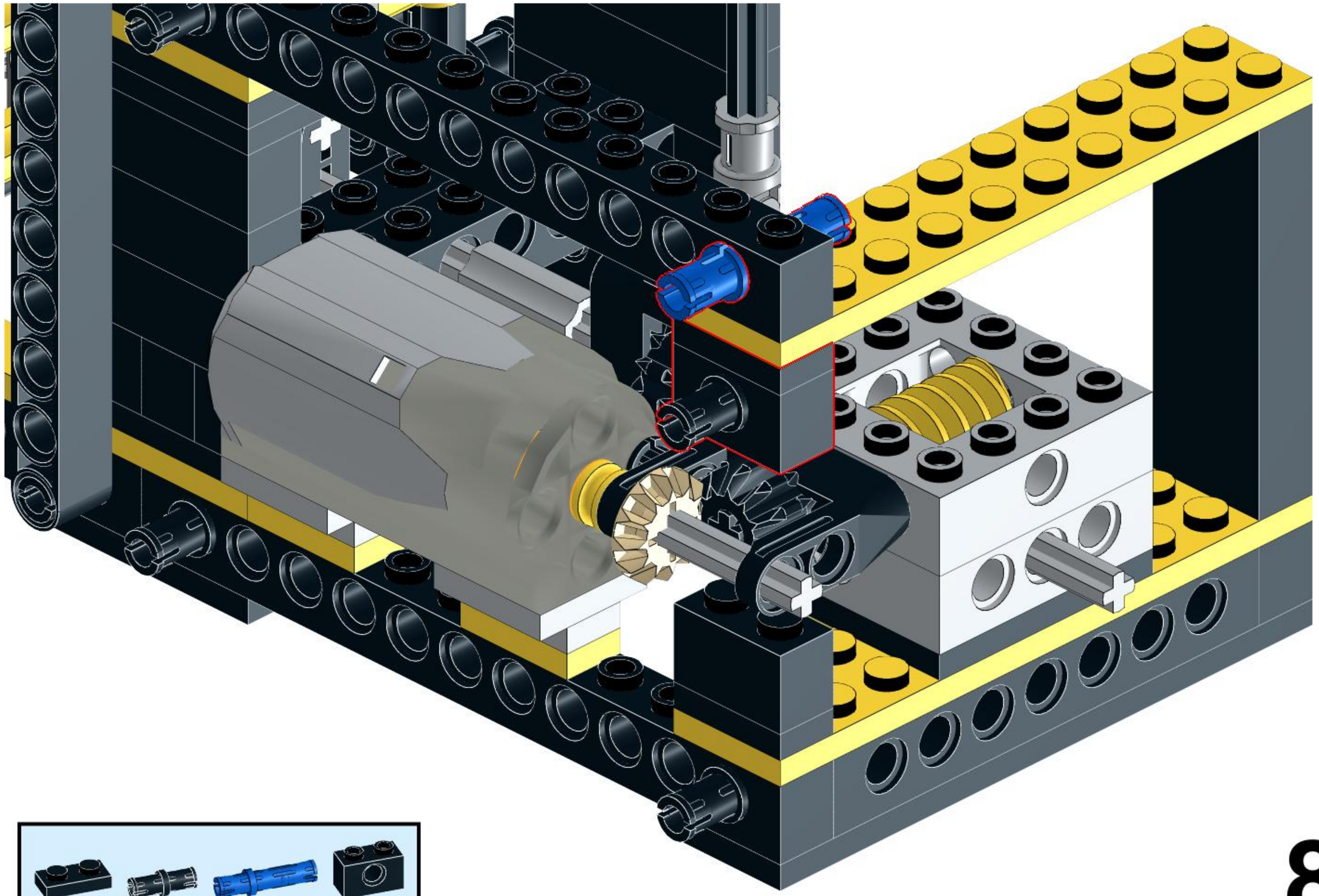

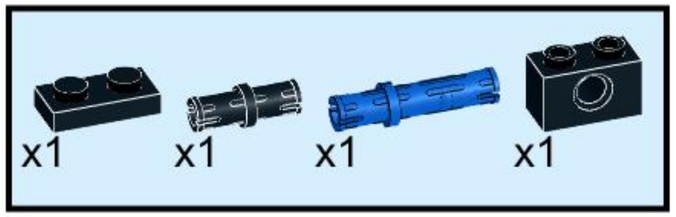
x1
x1
x1
x1

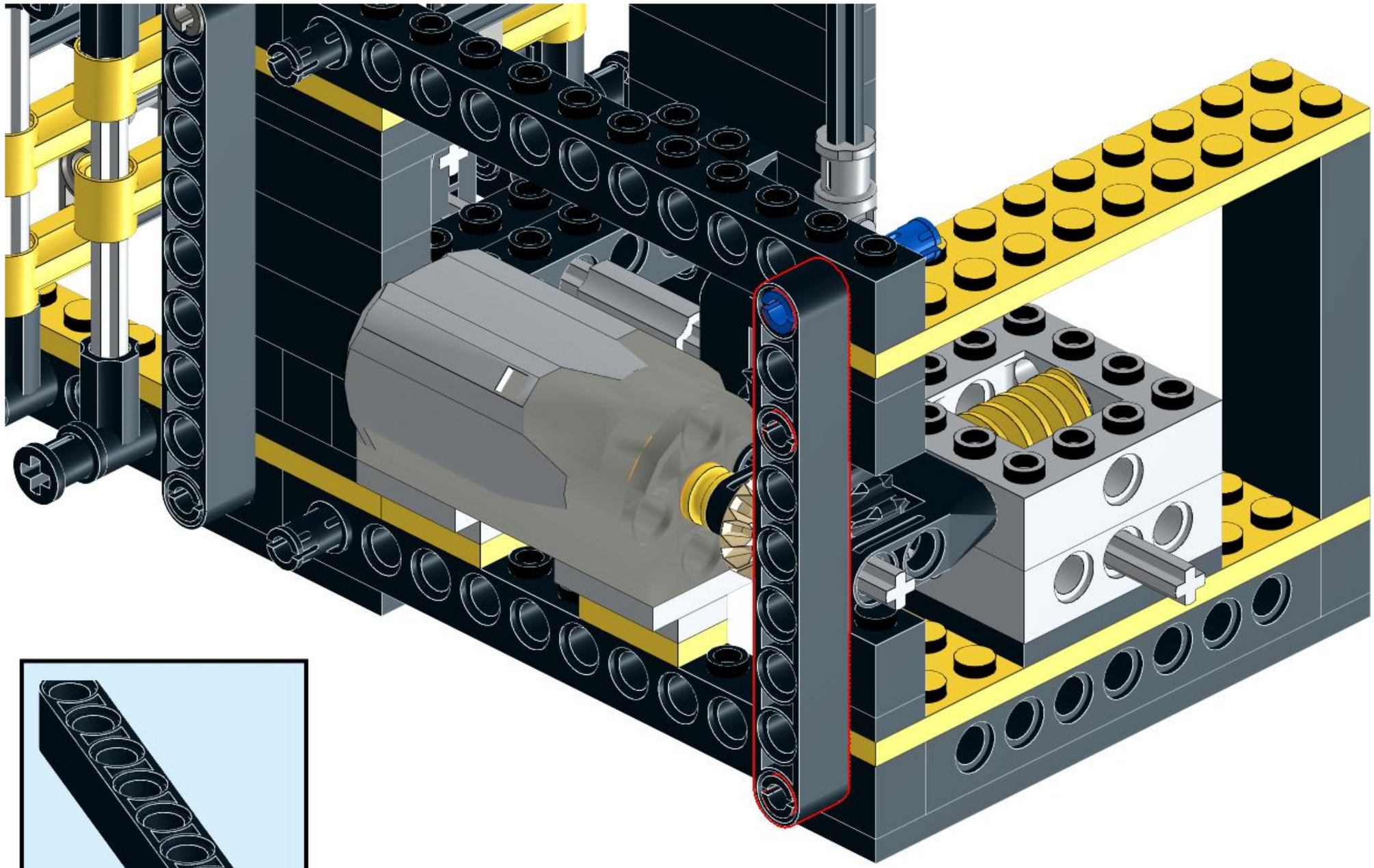

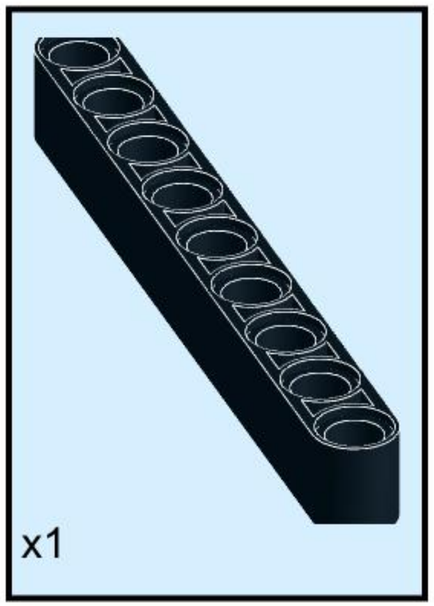
x1

84

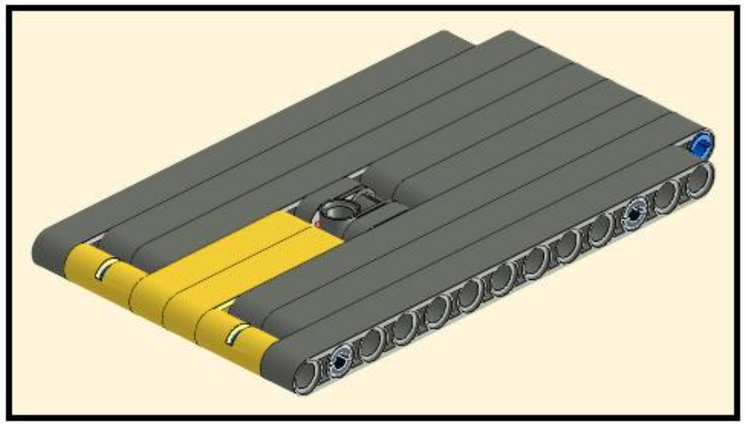

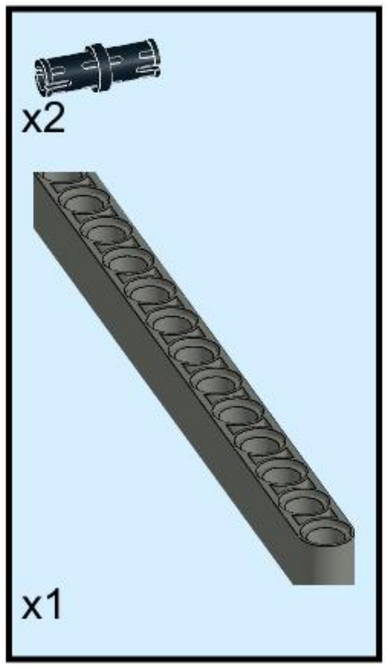

85

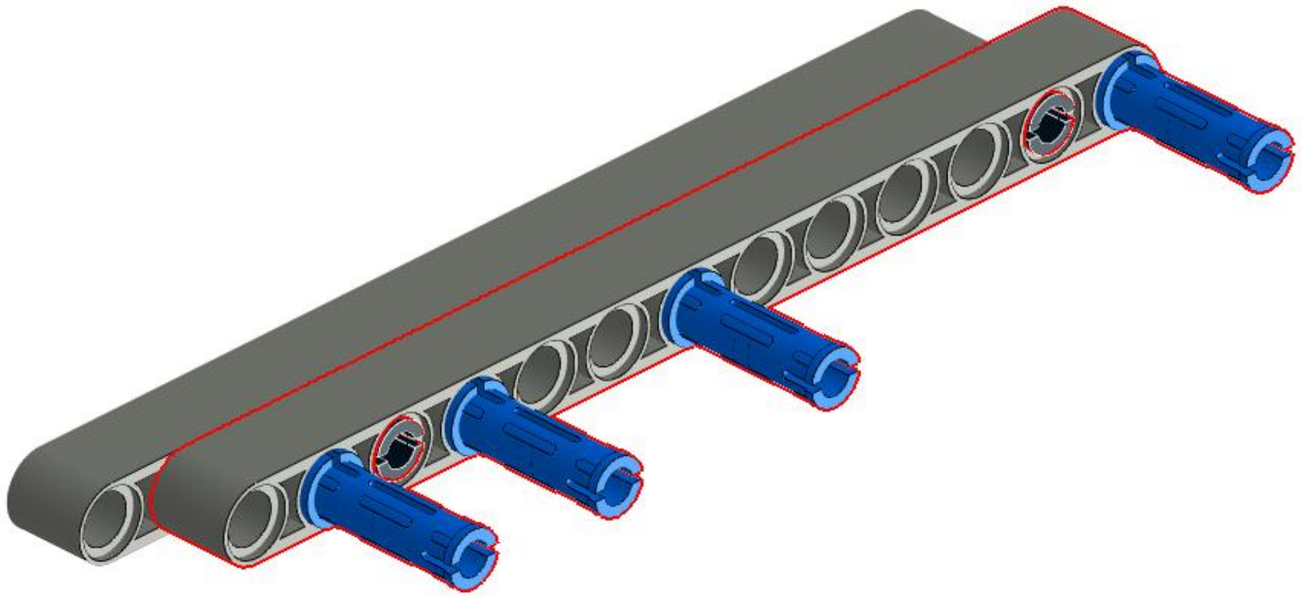

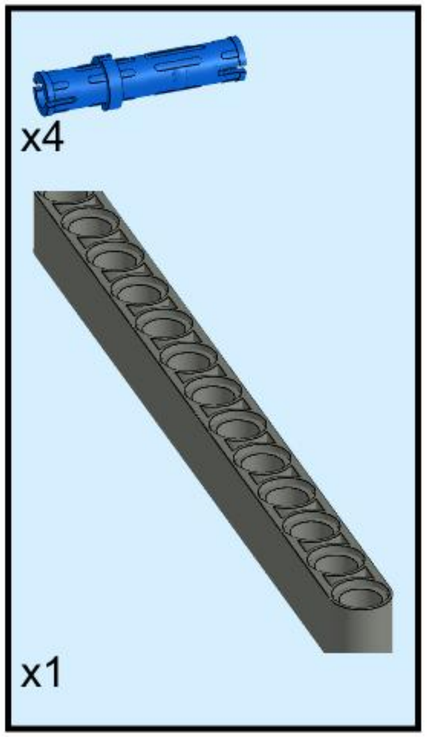

86

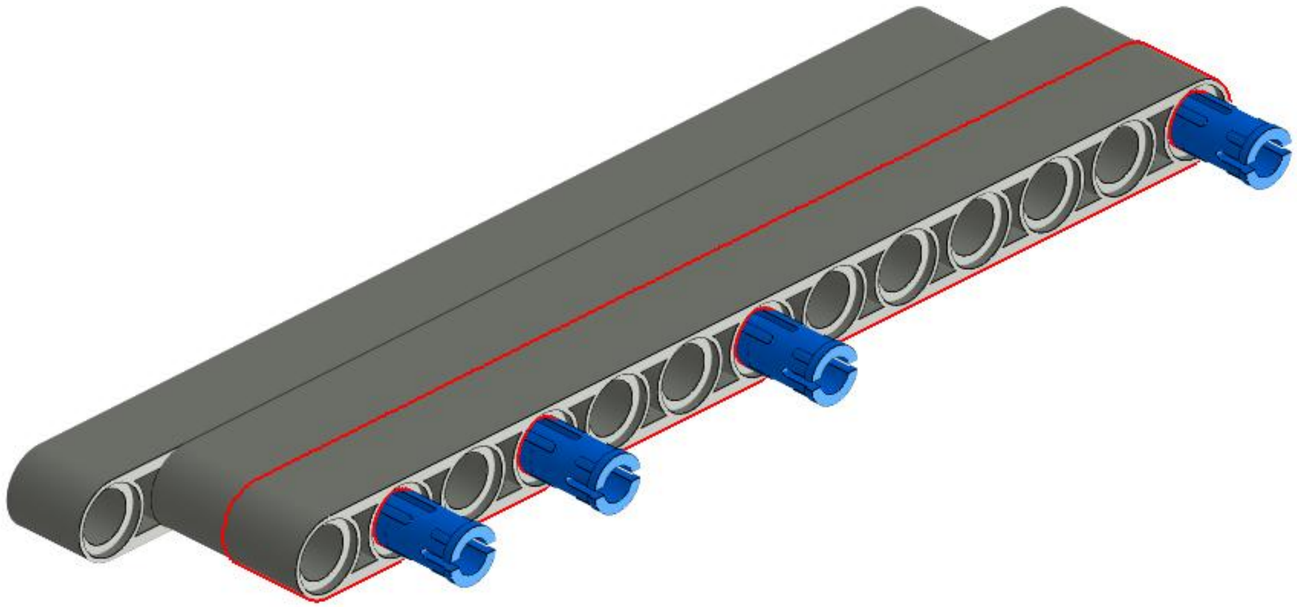

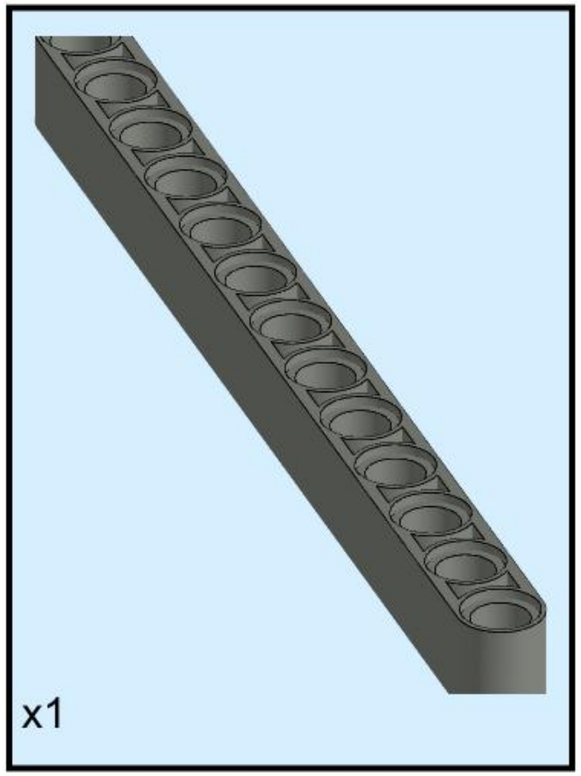

87

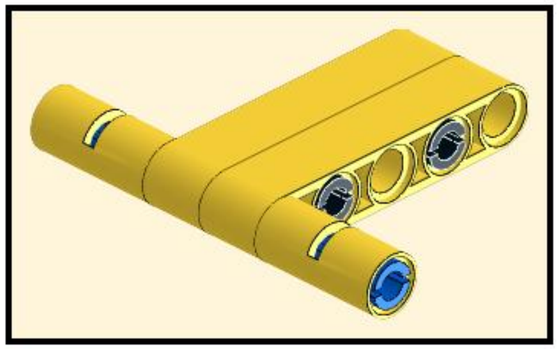

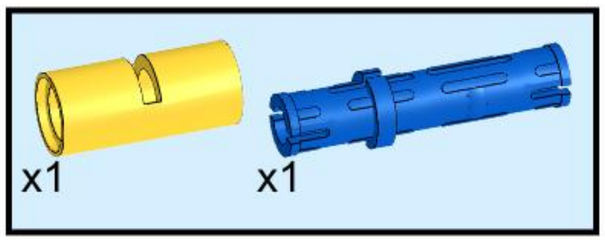

88

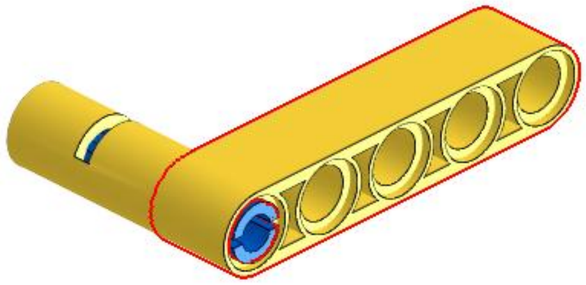

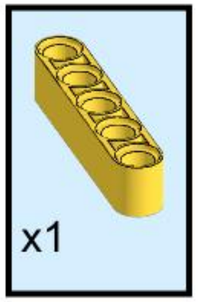

89

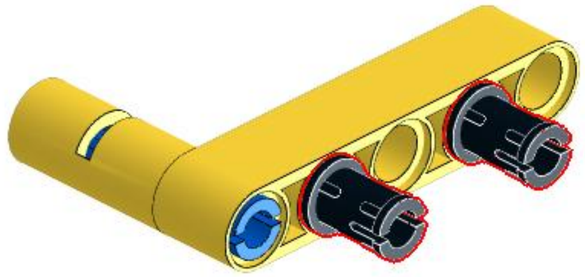

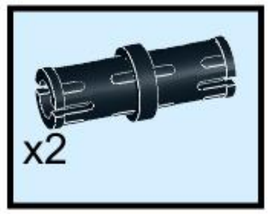

90

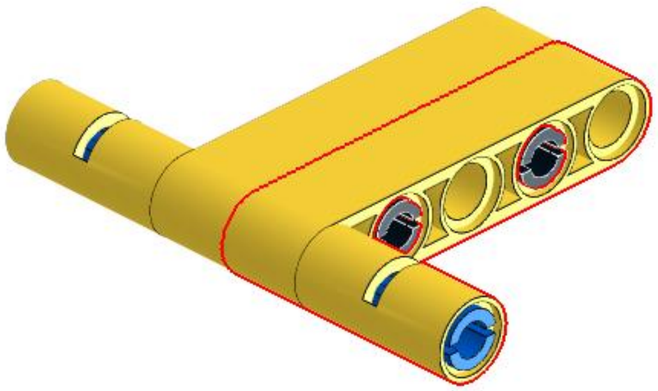

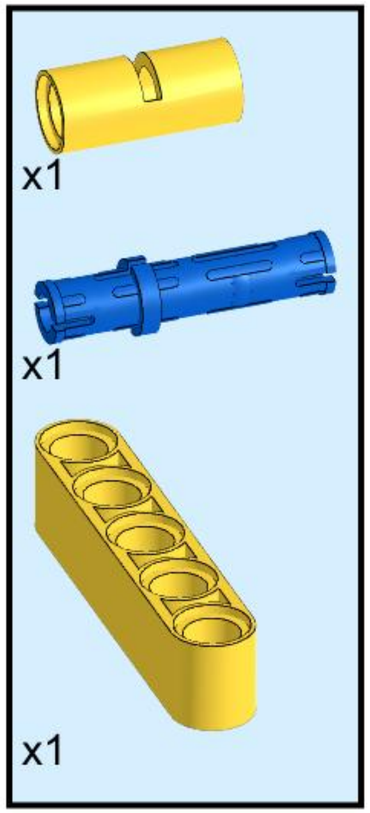

91

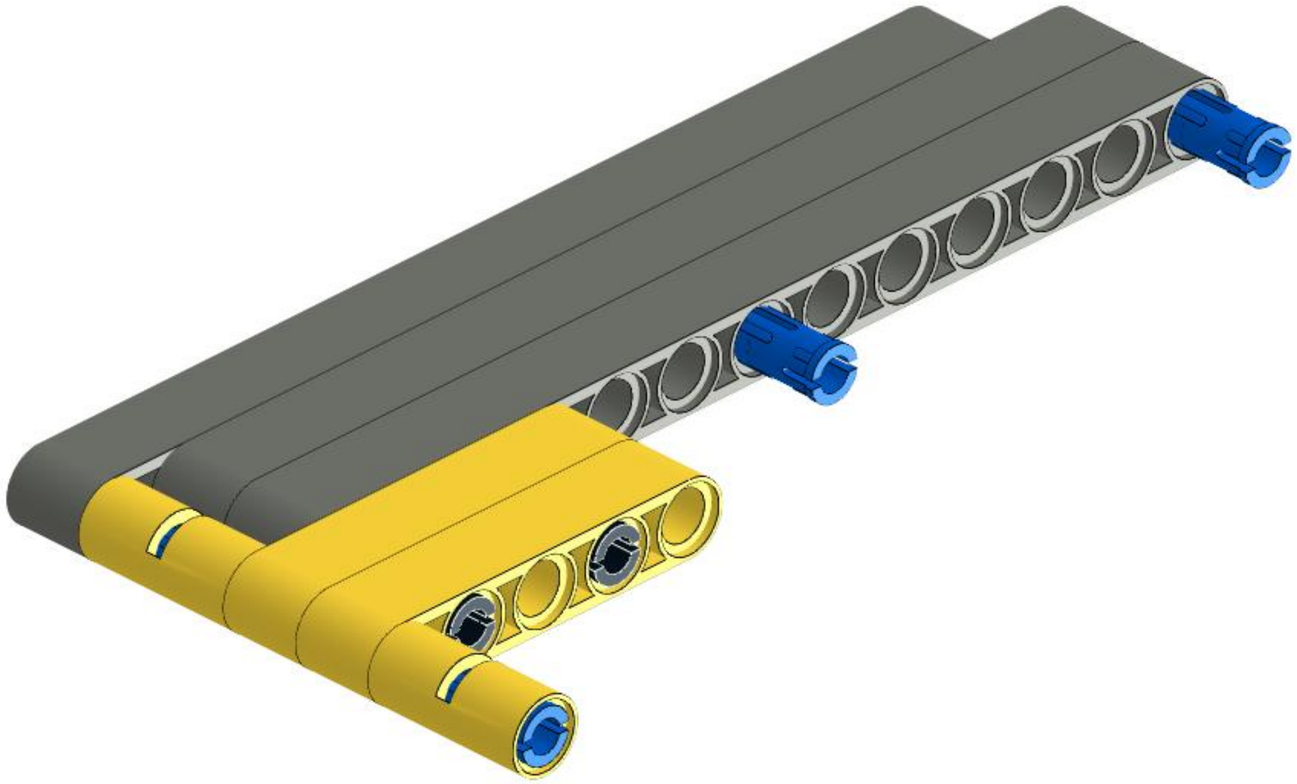

92

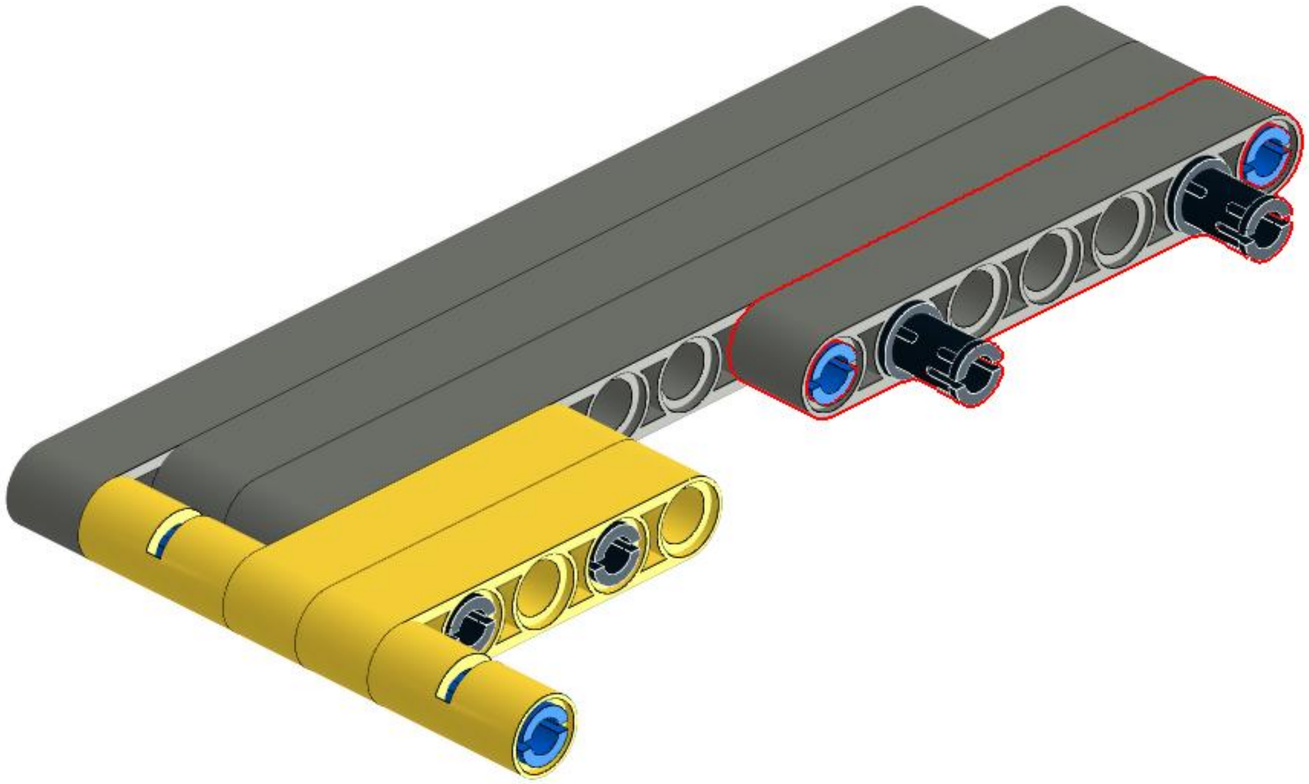

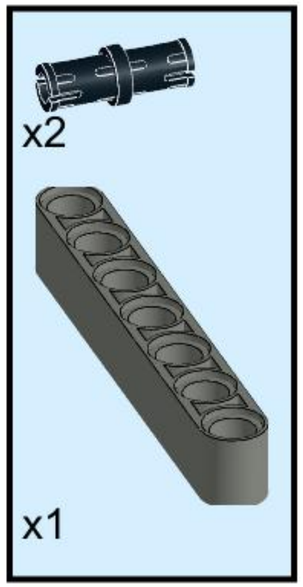

93

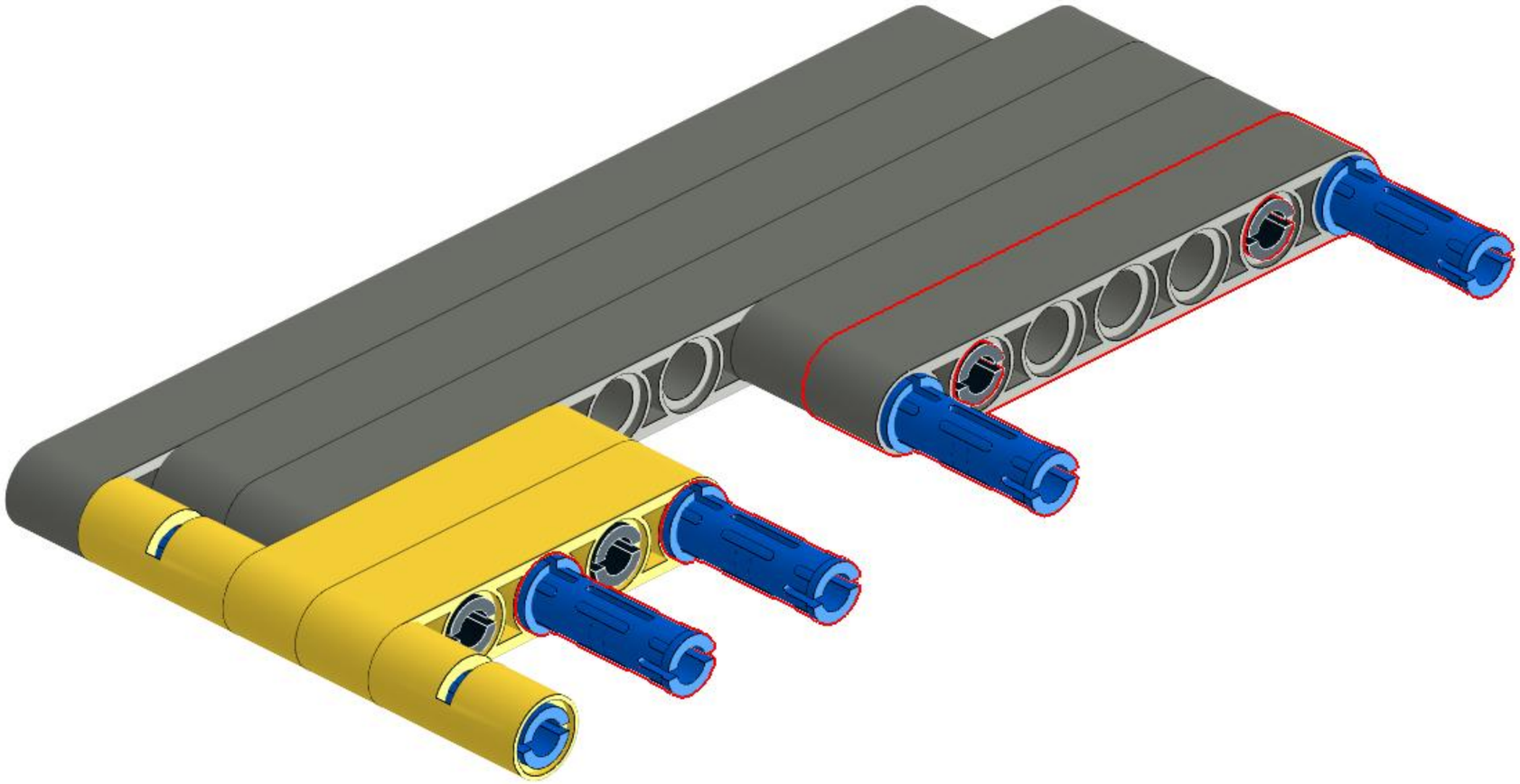

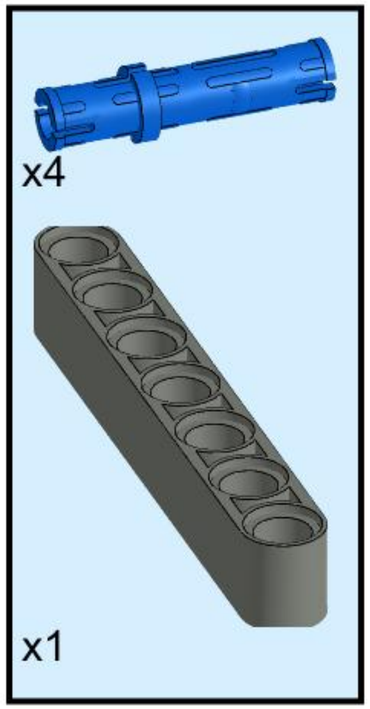

94

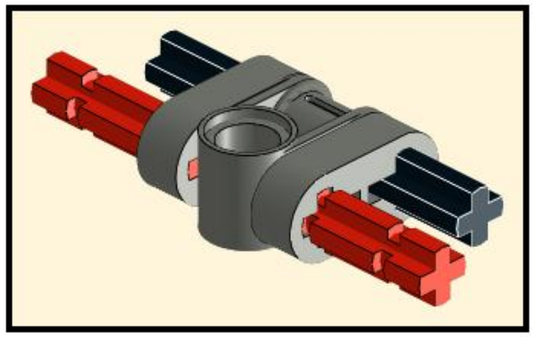

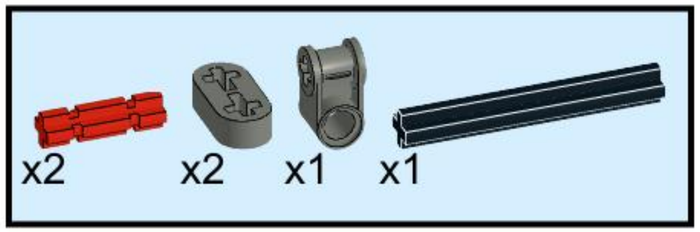

95

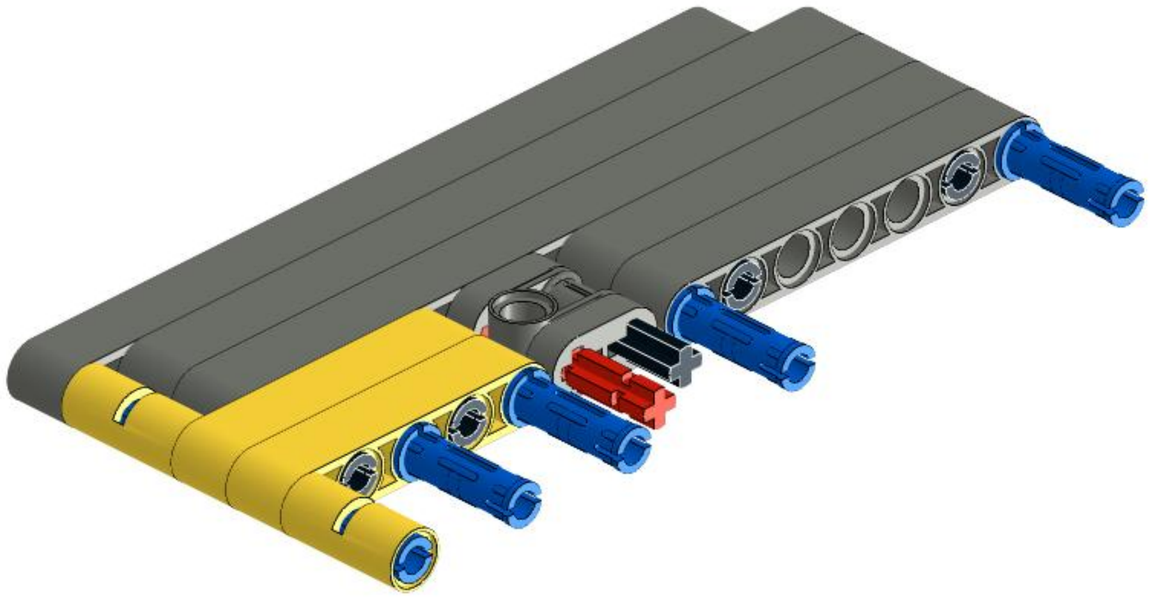

96

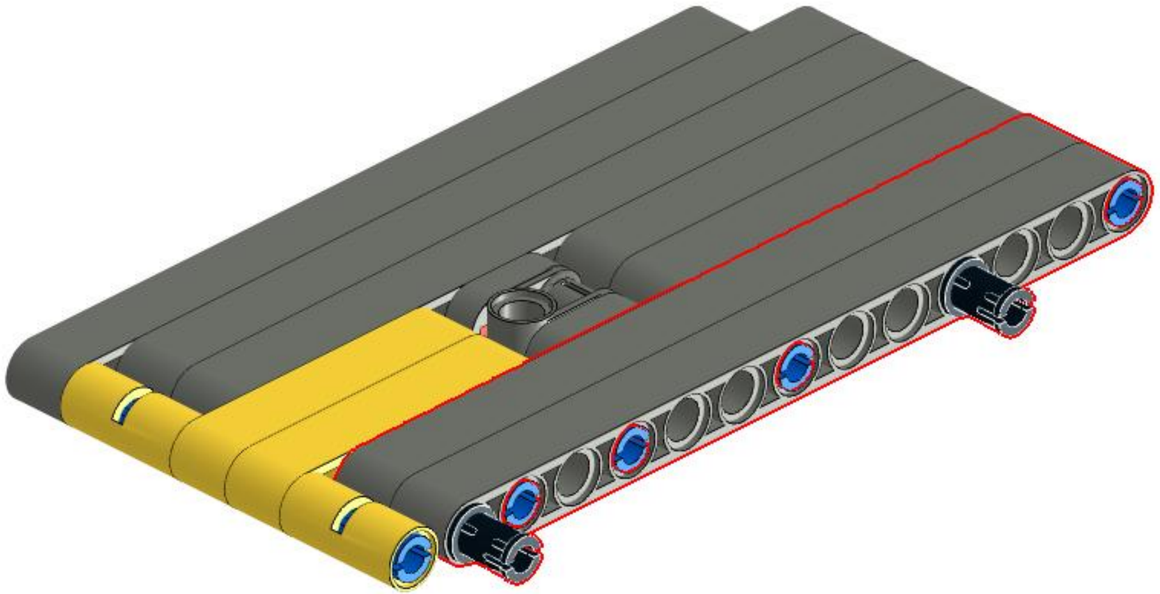

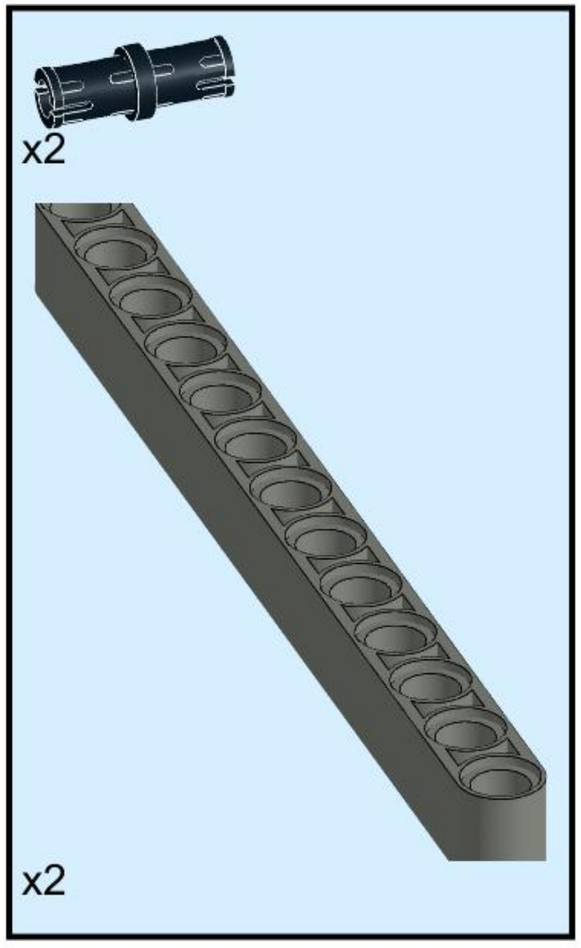

97

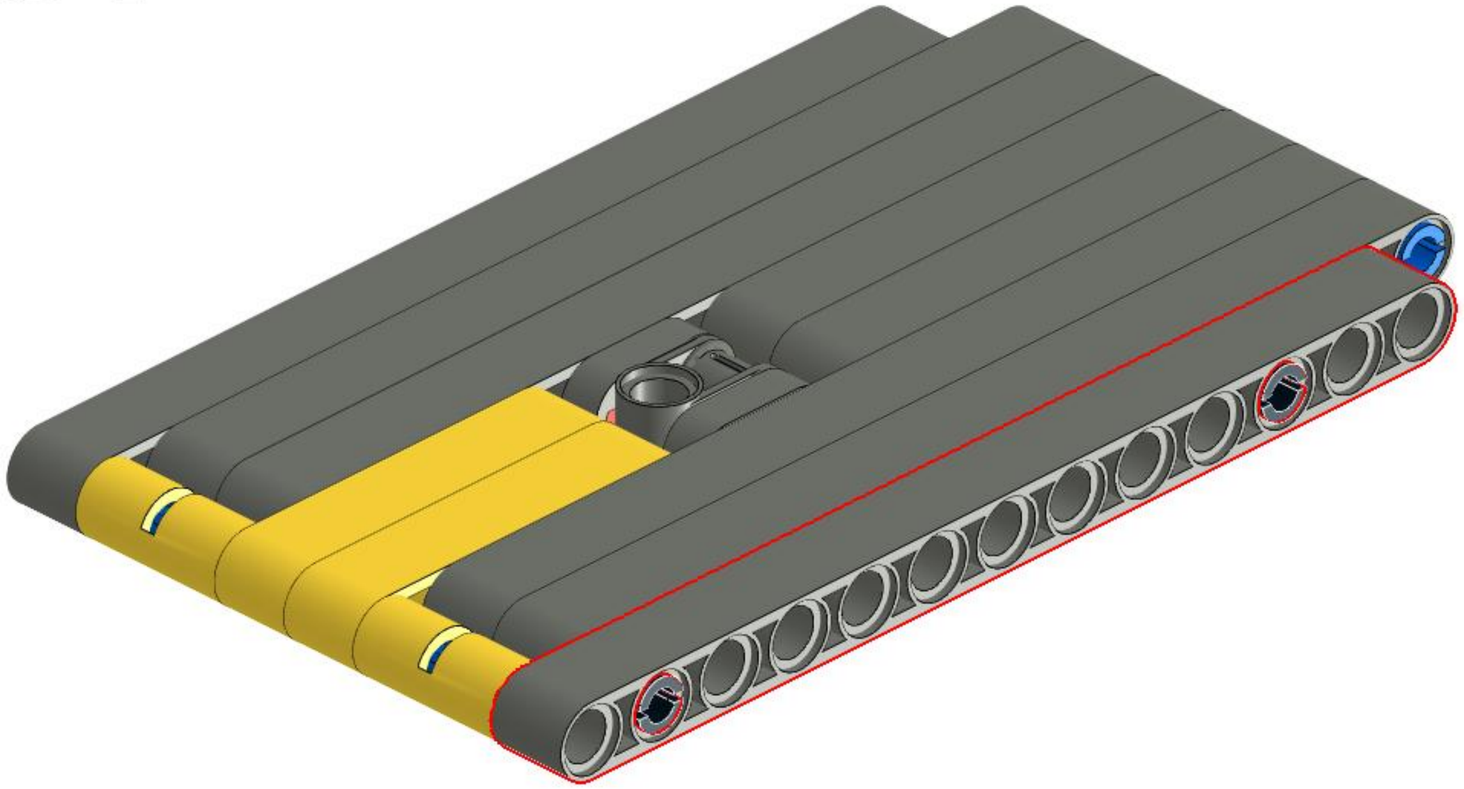

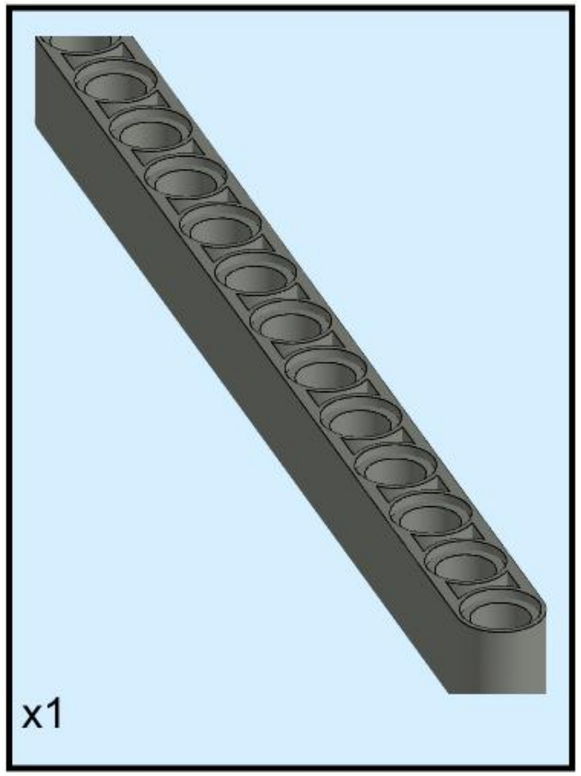

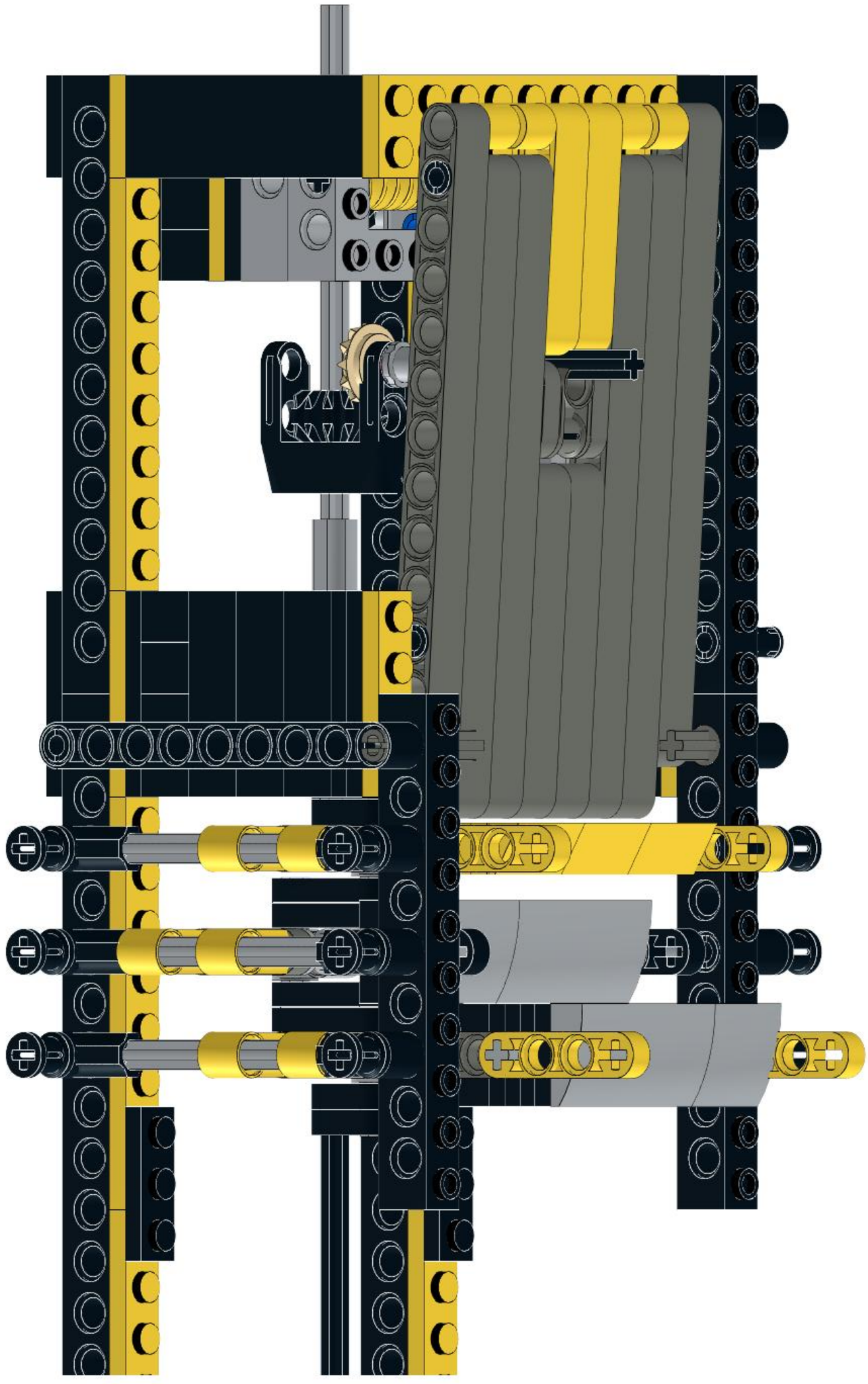

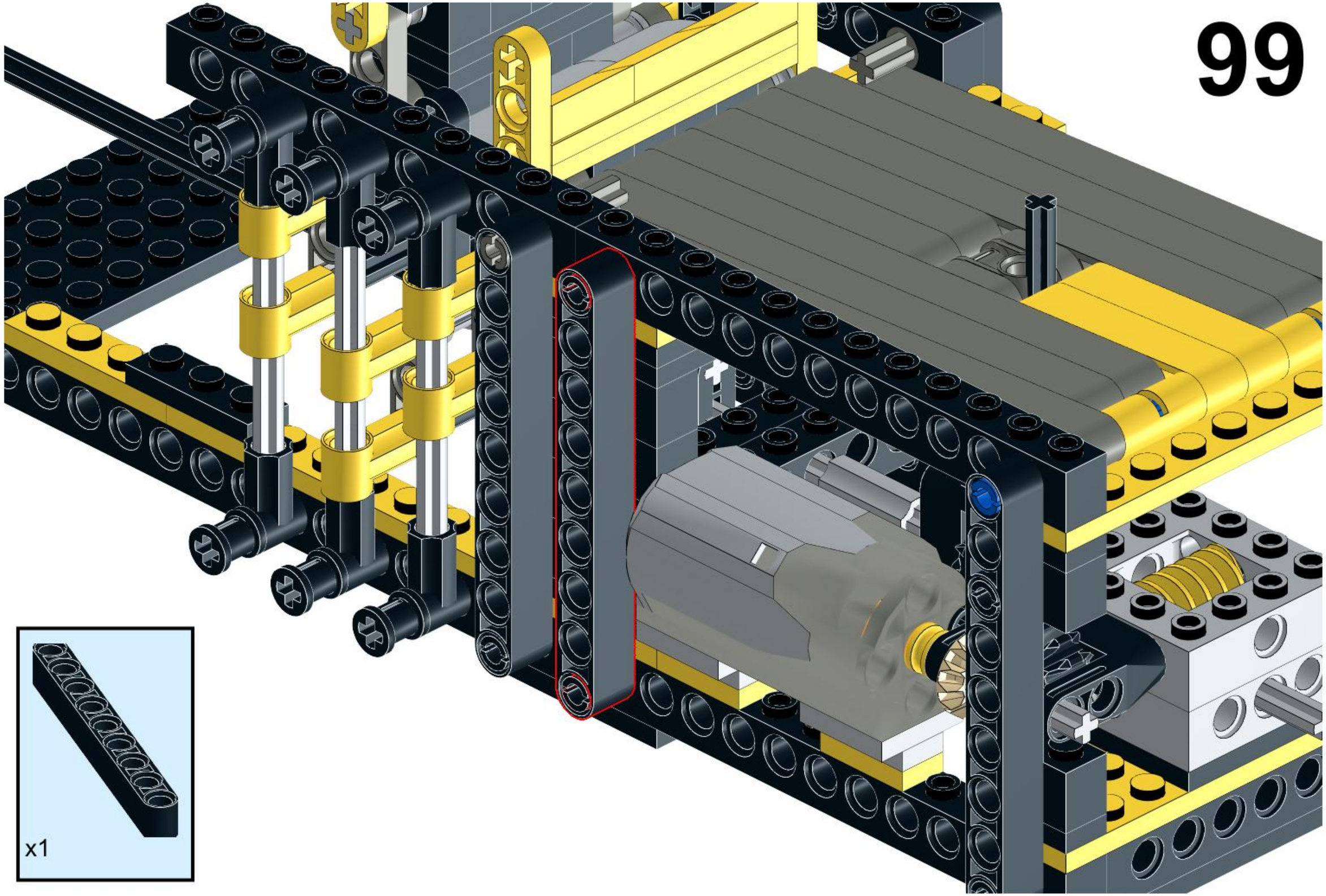
x1

100

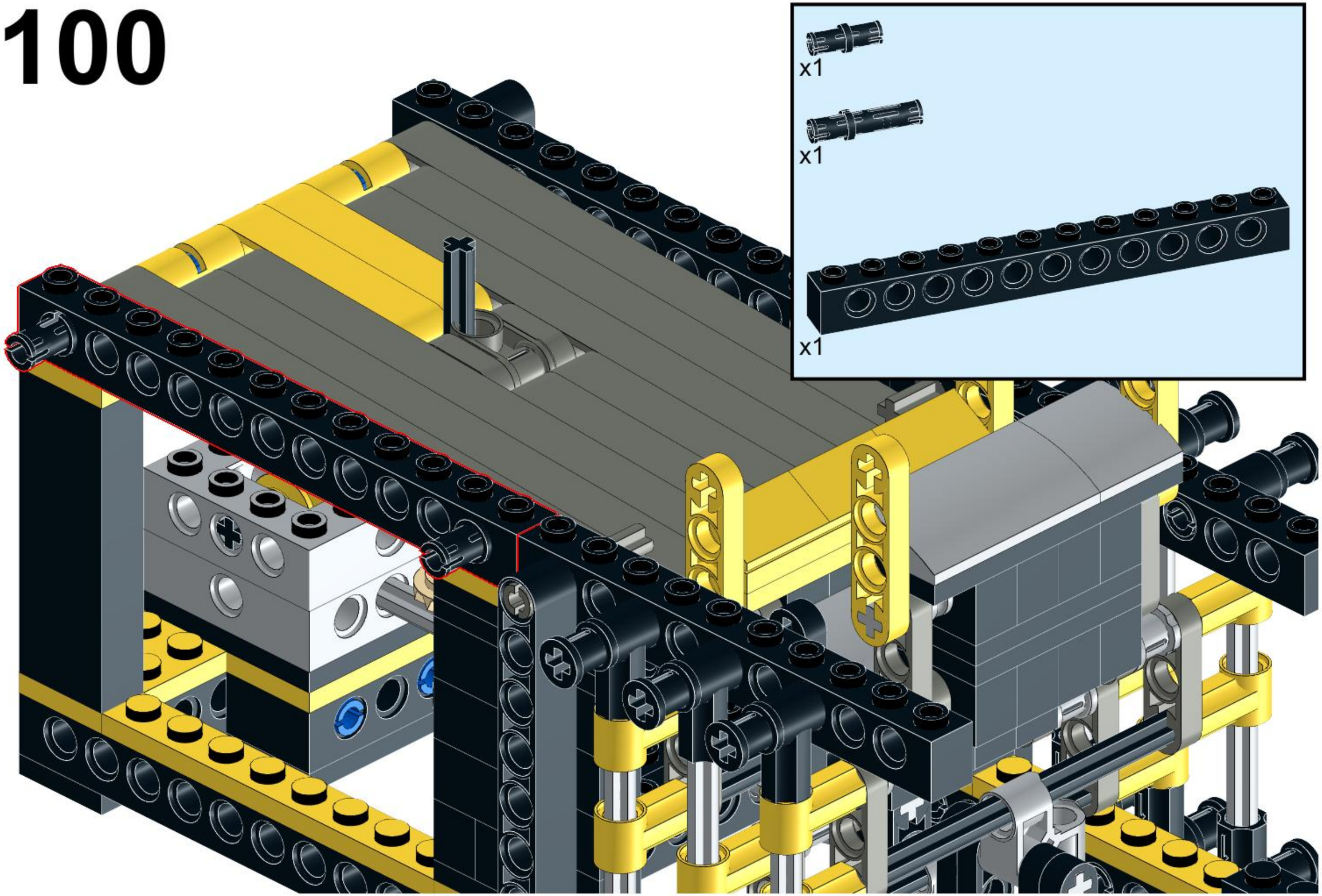

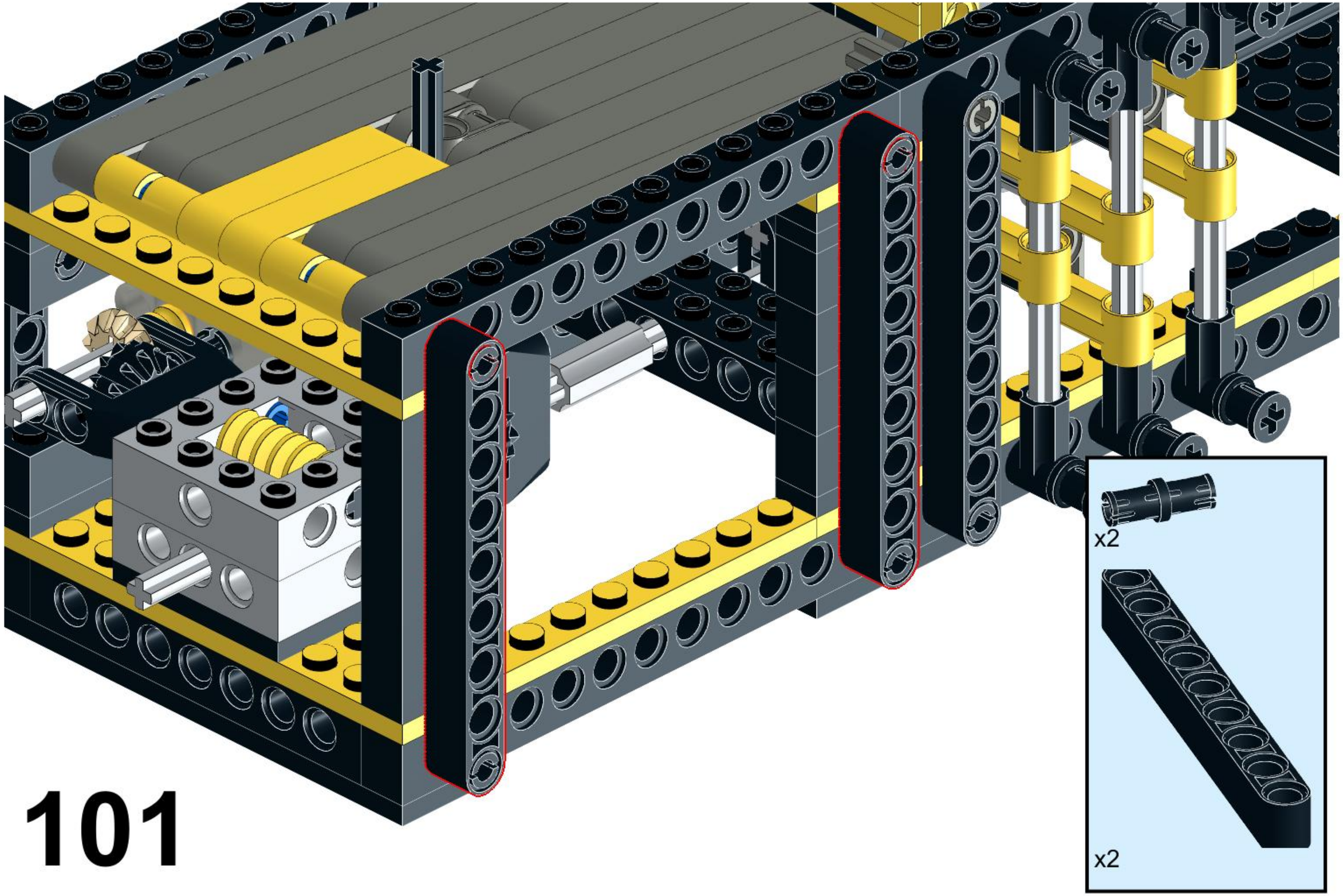

101

102

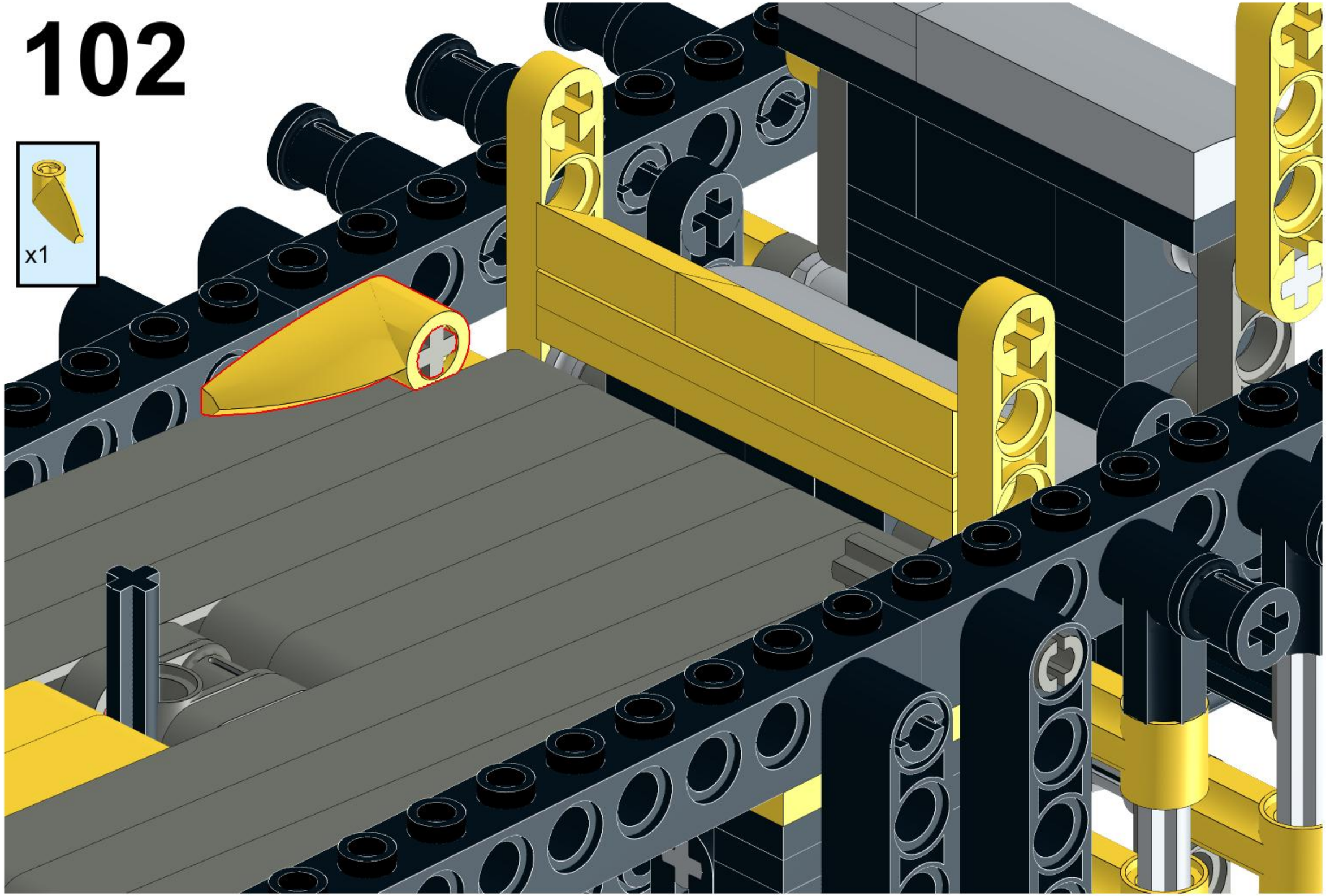

103

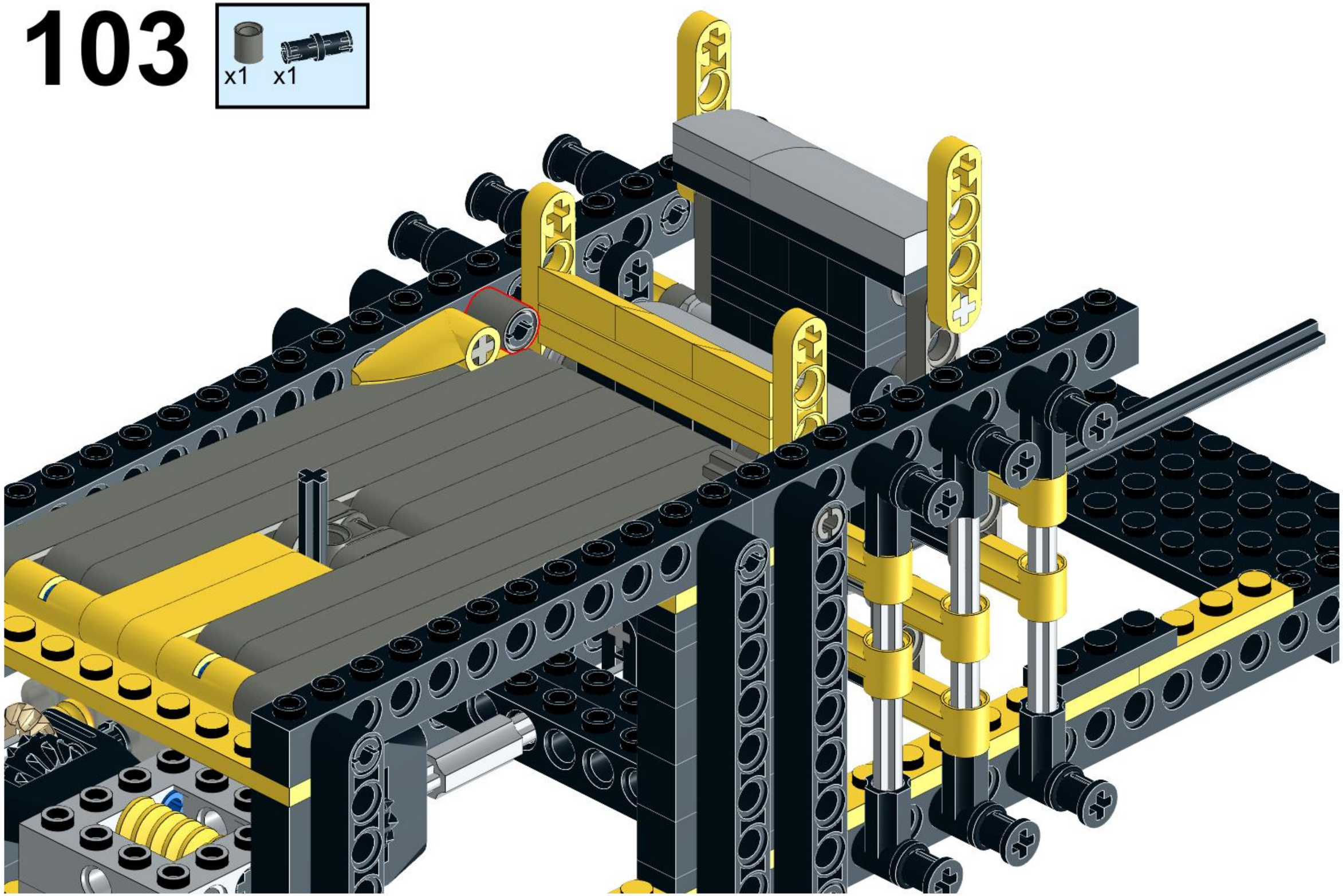

104

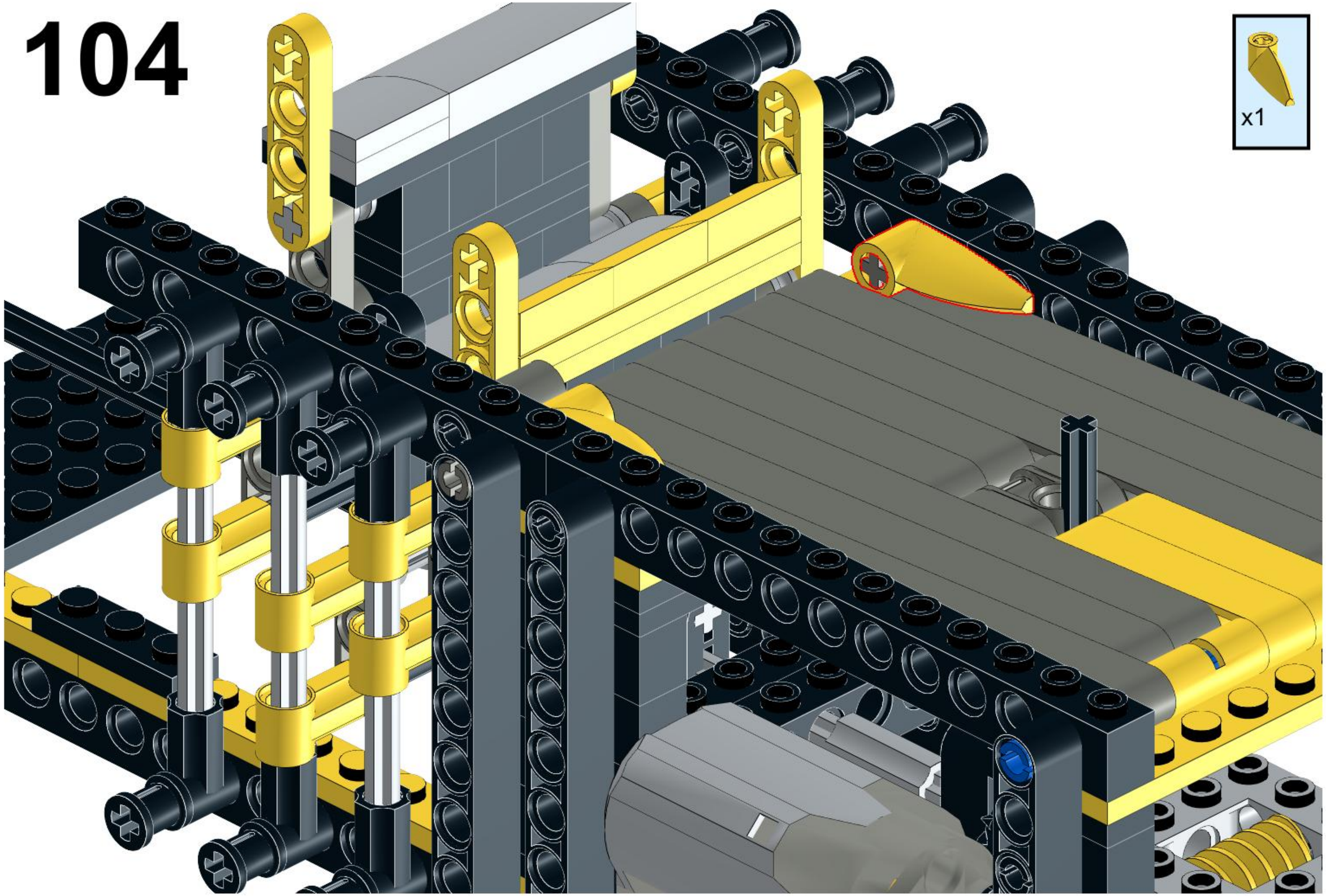

105

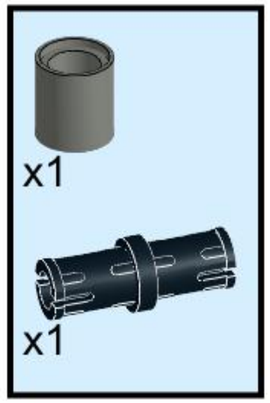

106

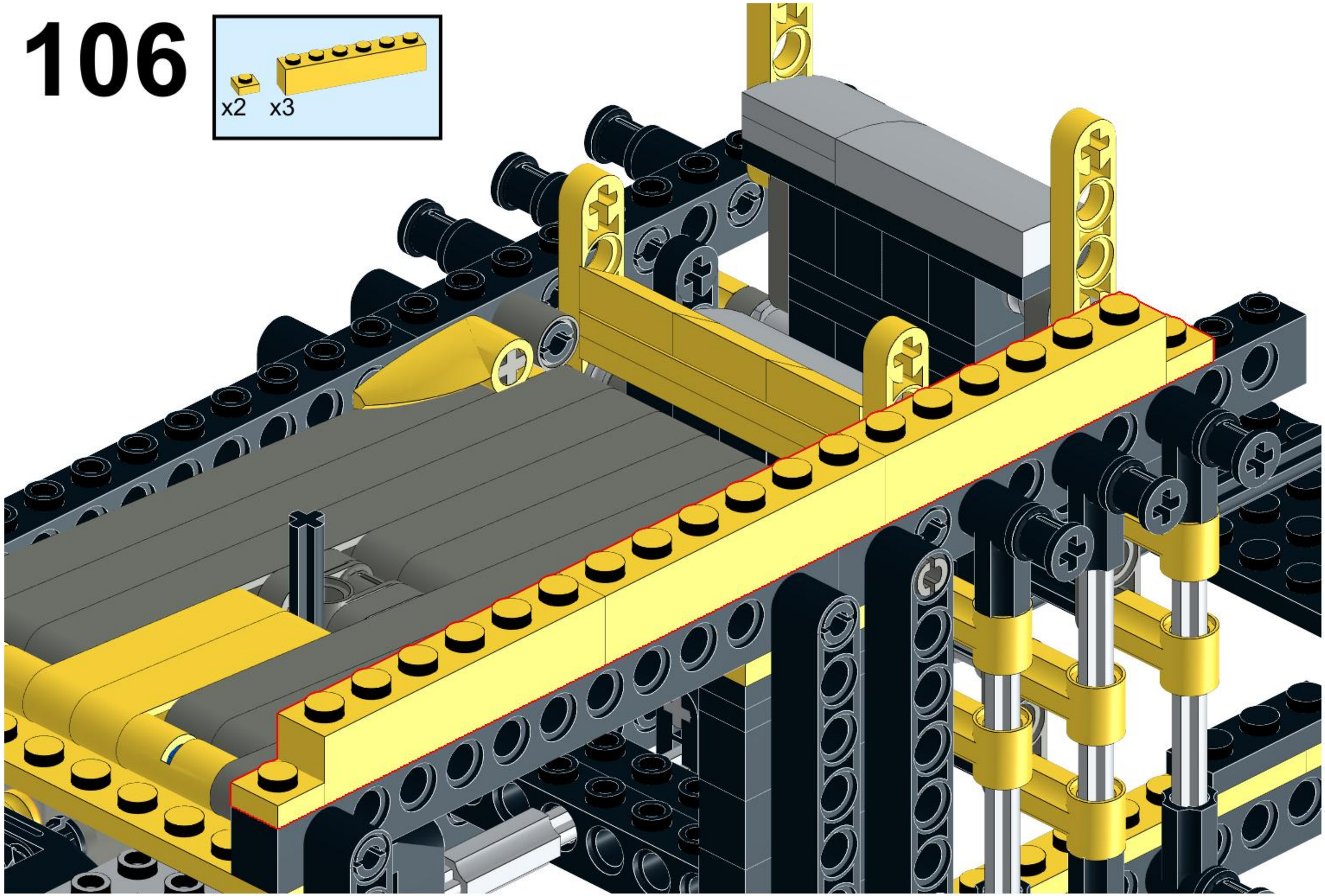

107

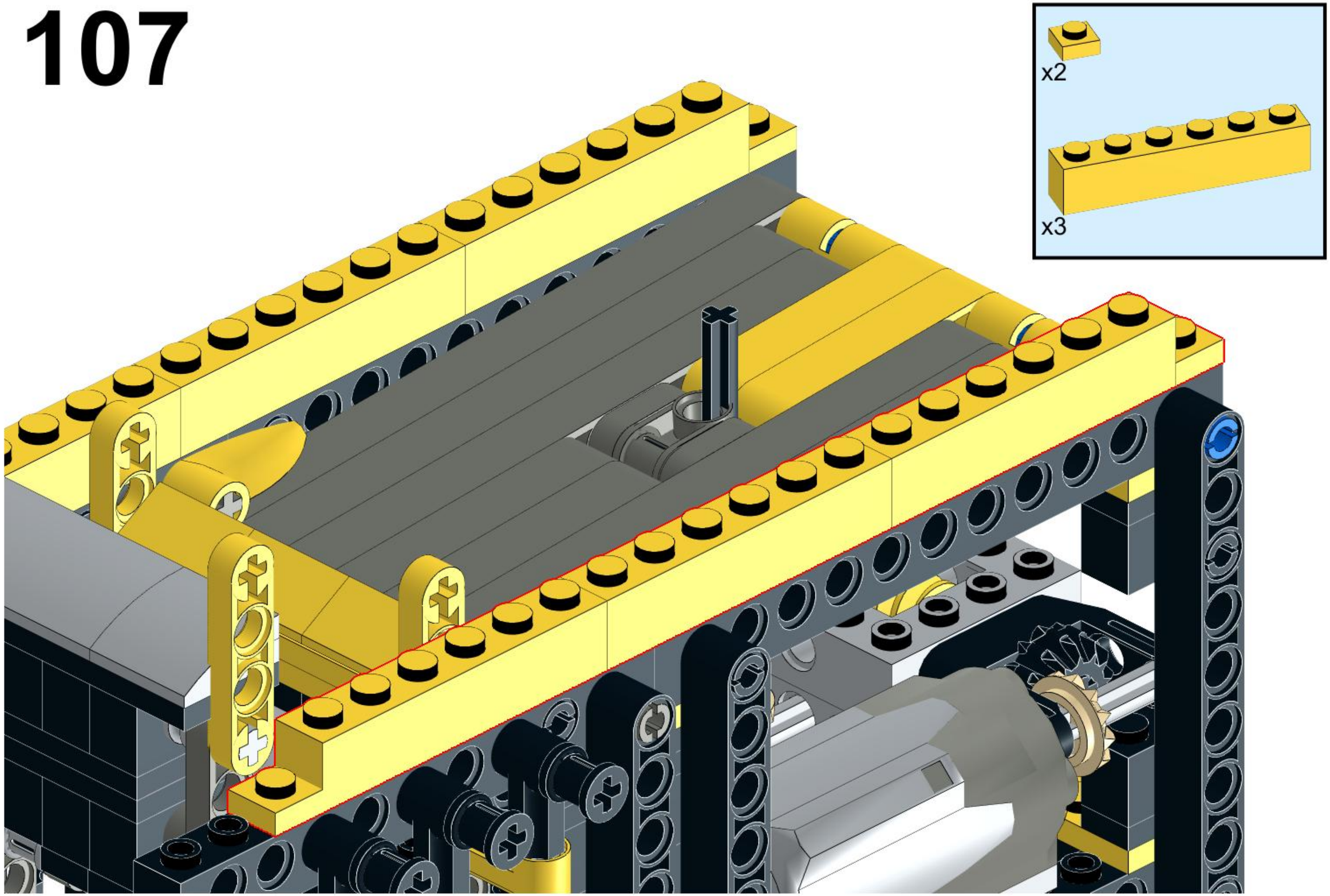

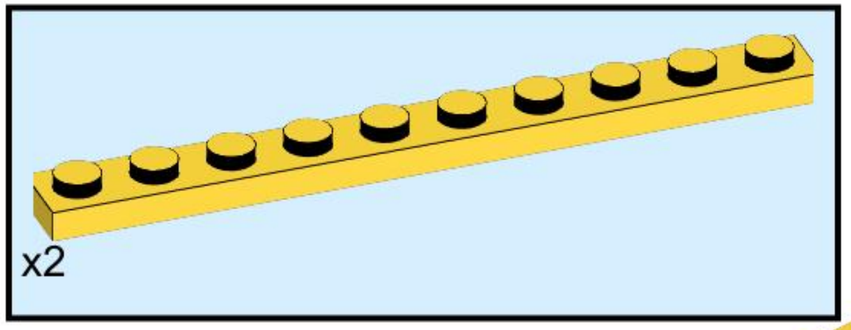

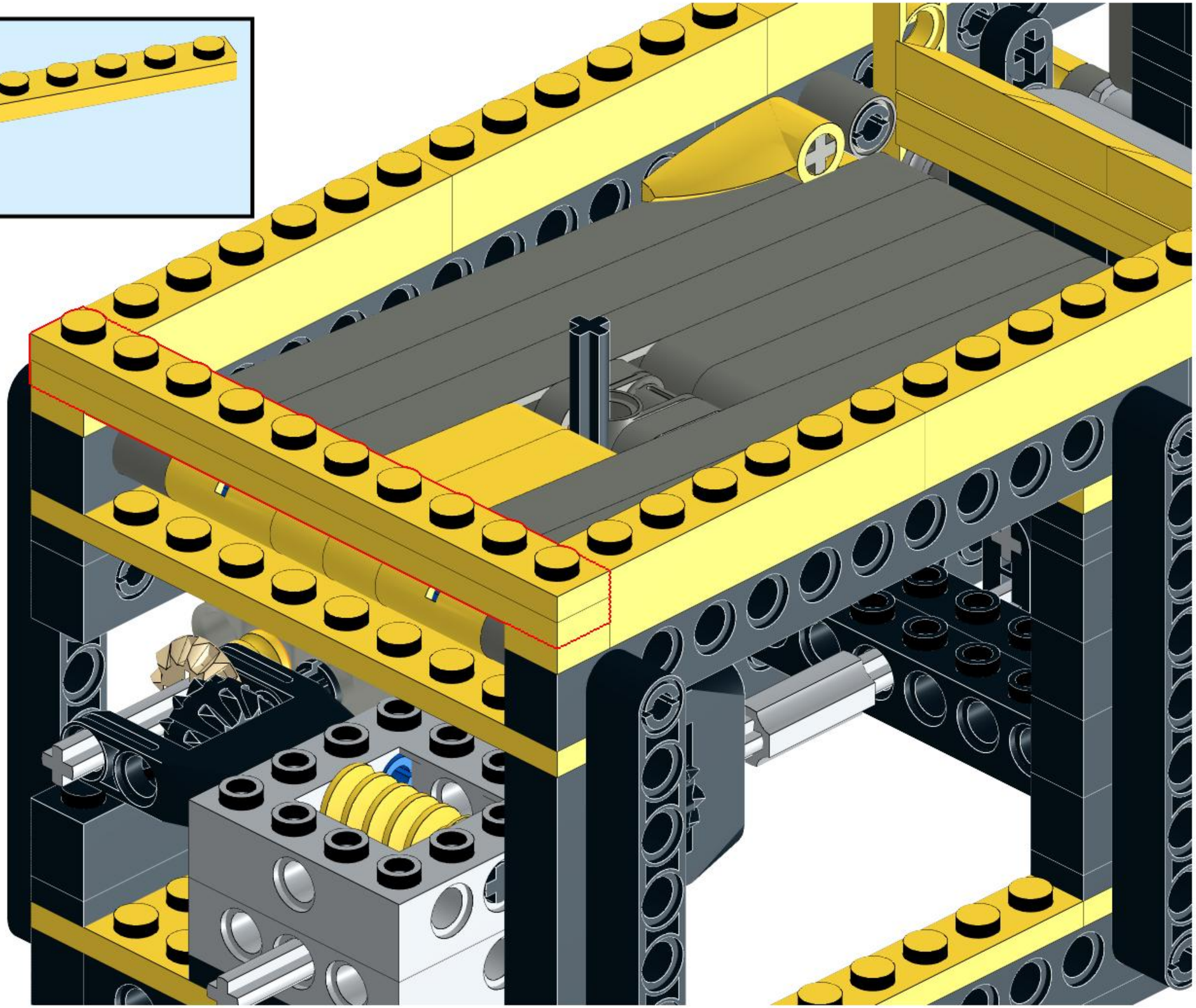

108

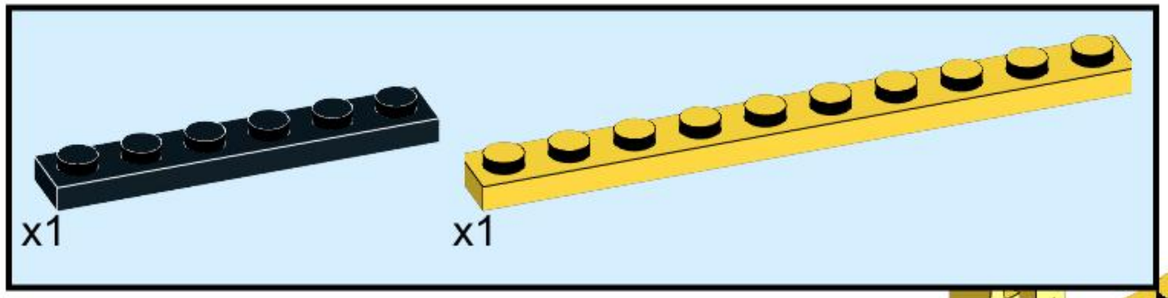

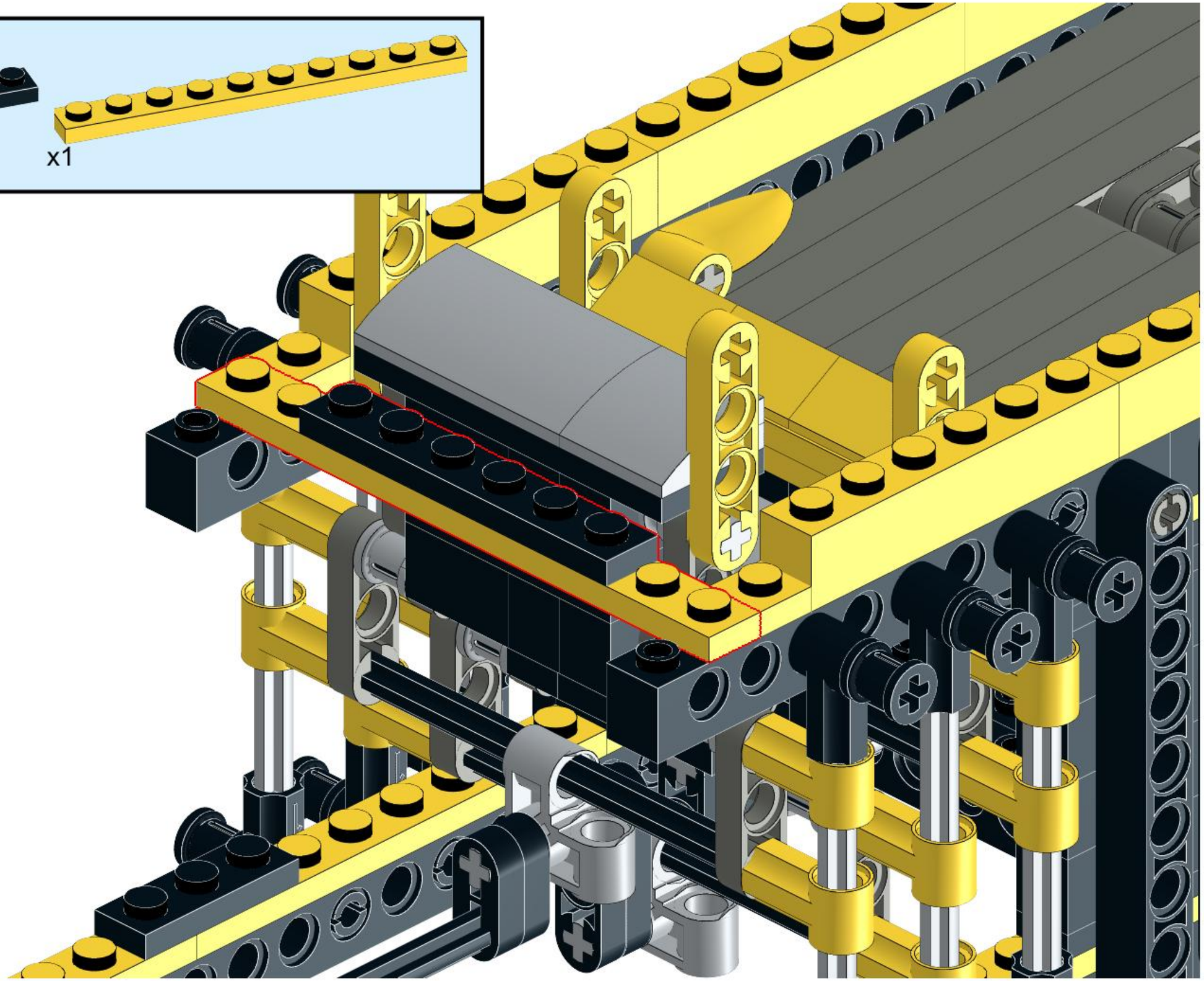

109

110

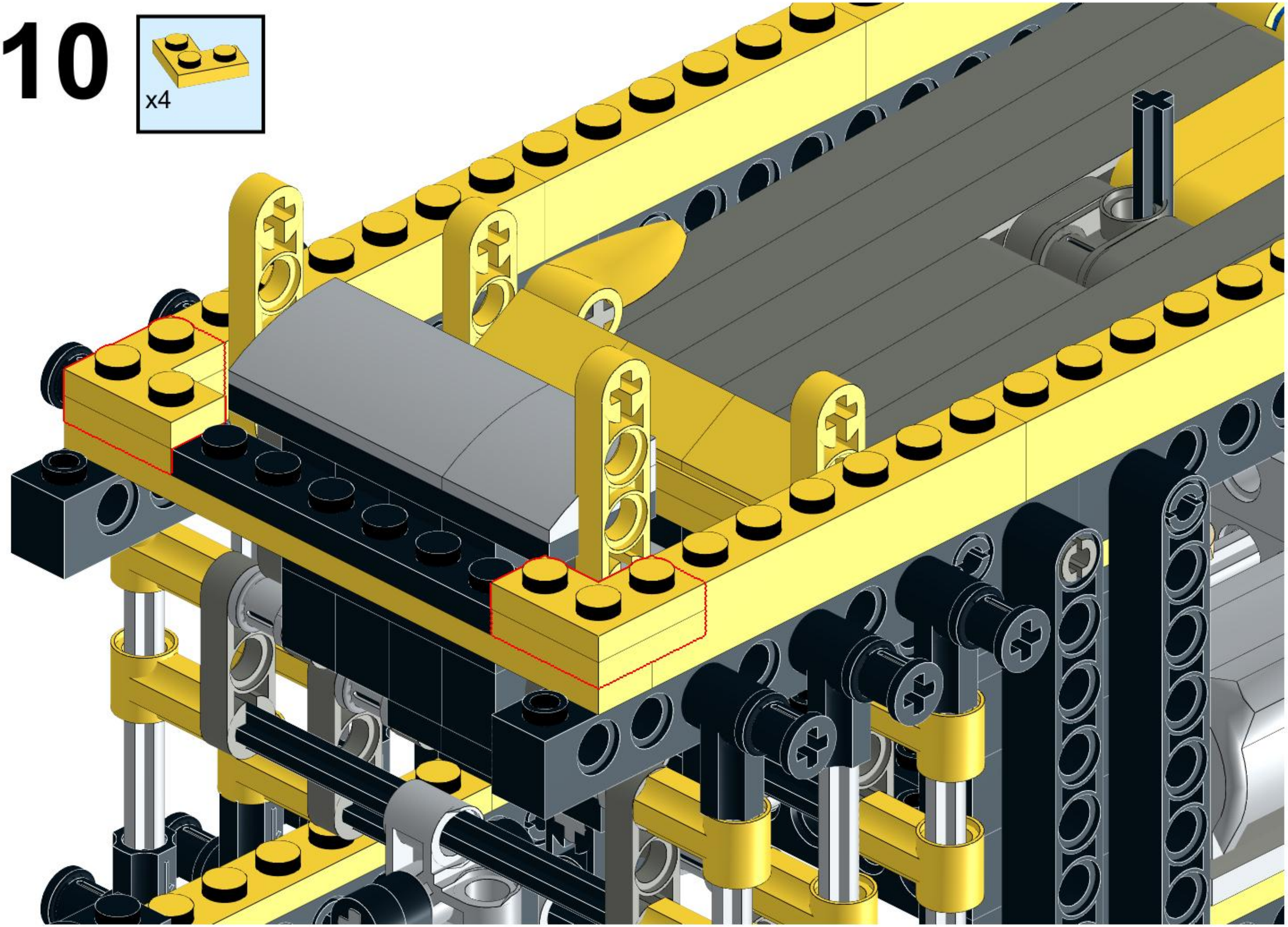

111

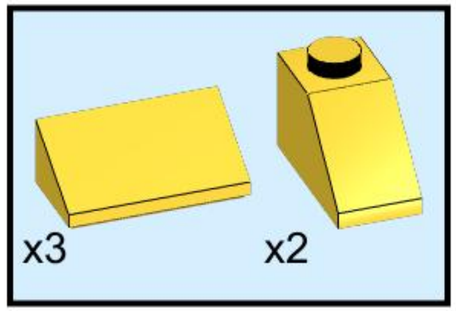

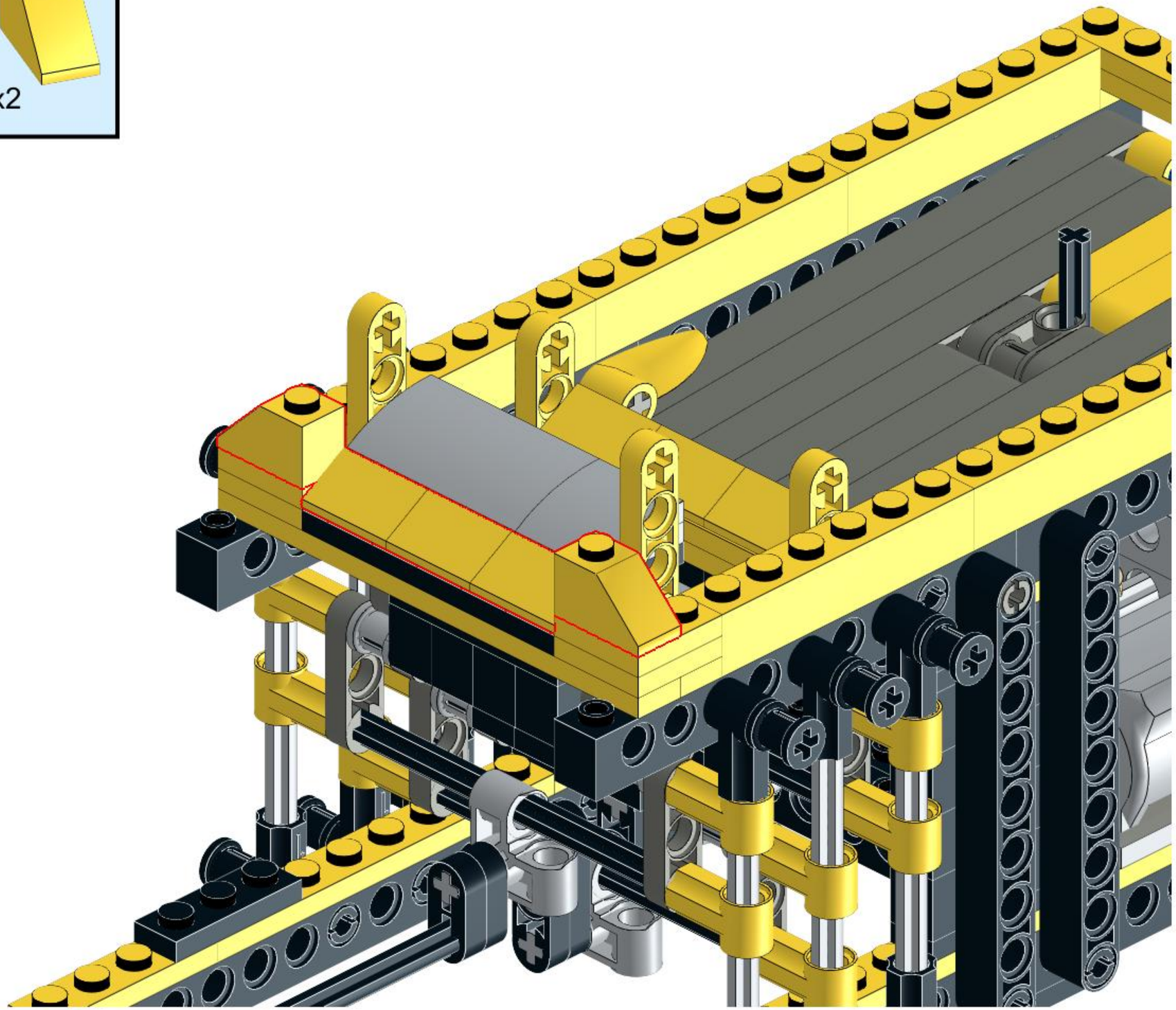

112

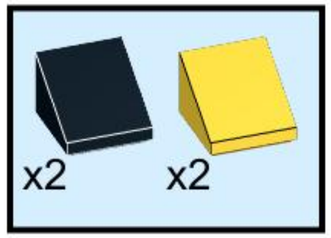

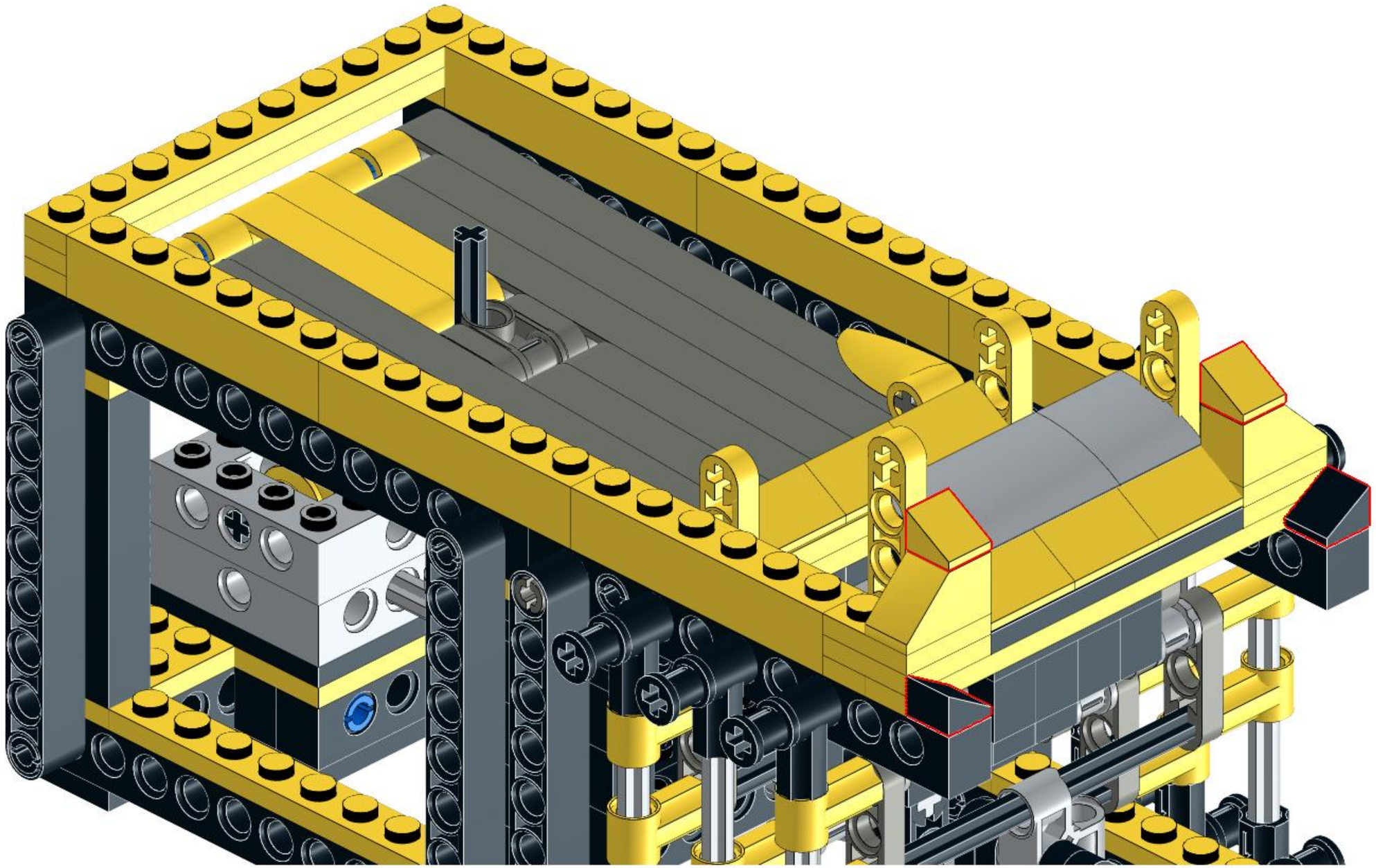

113

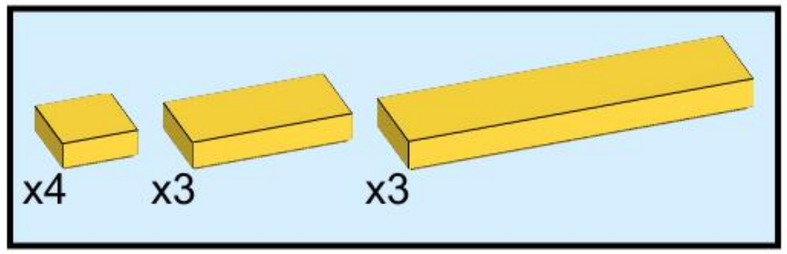

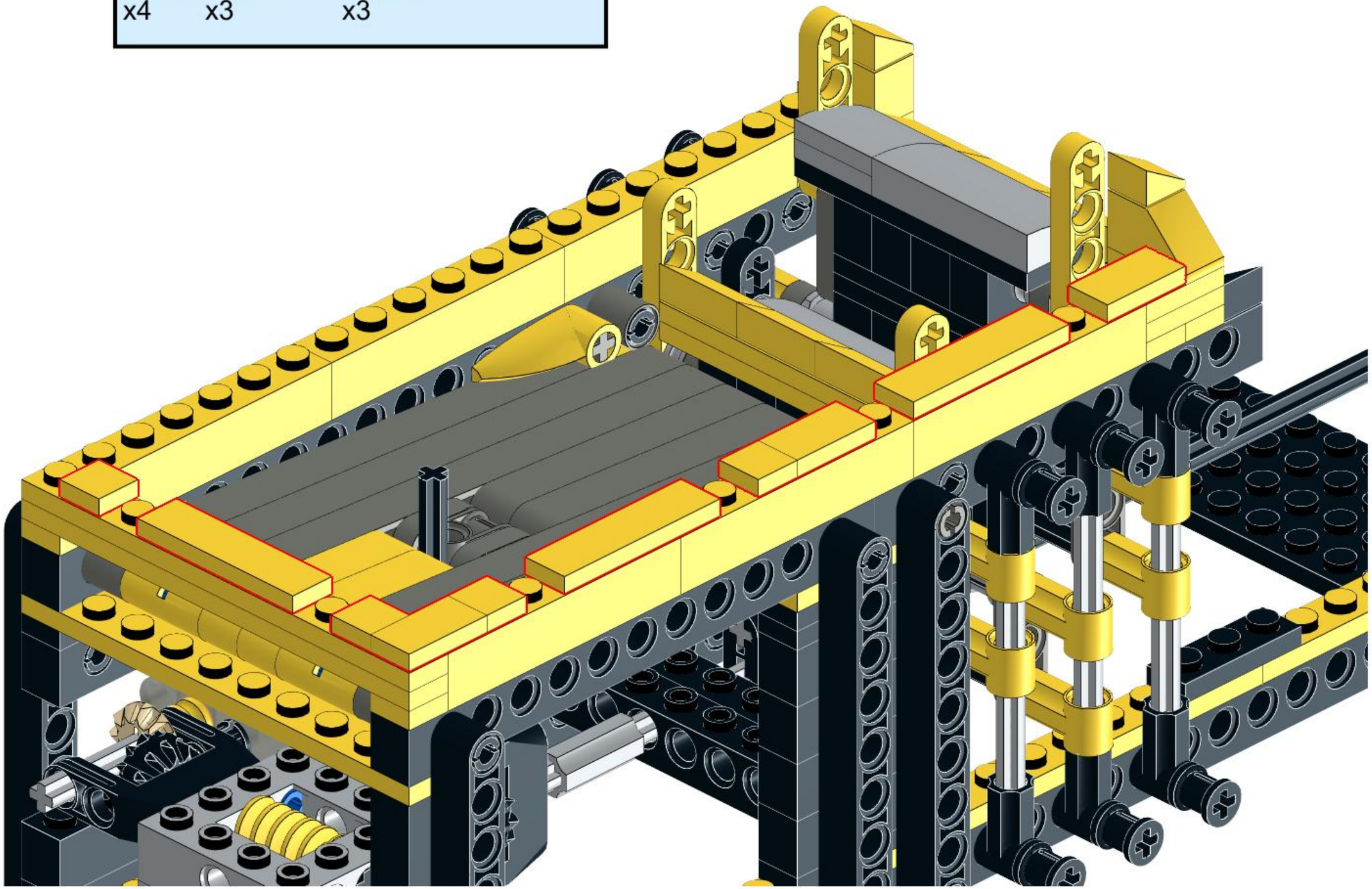

114

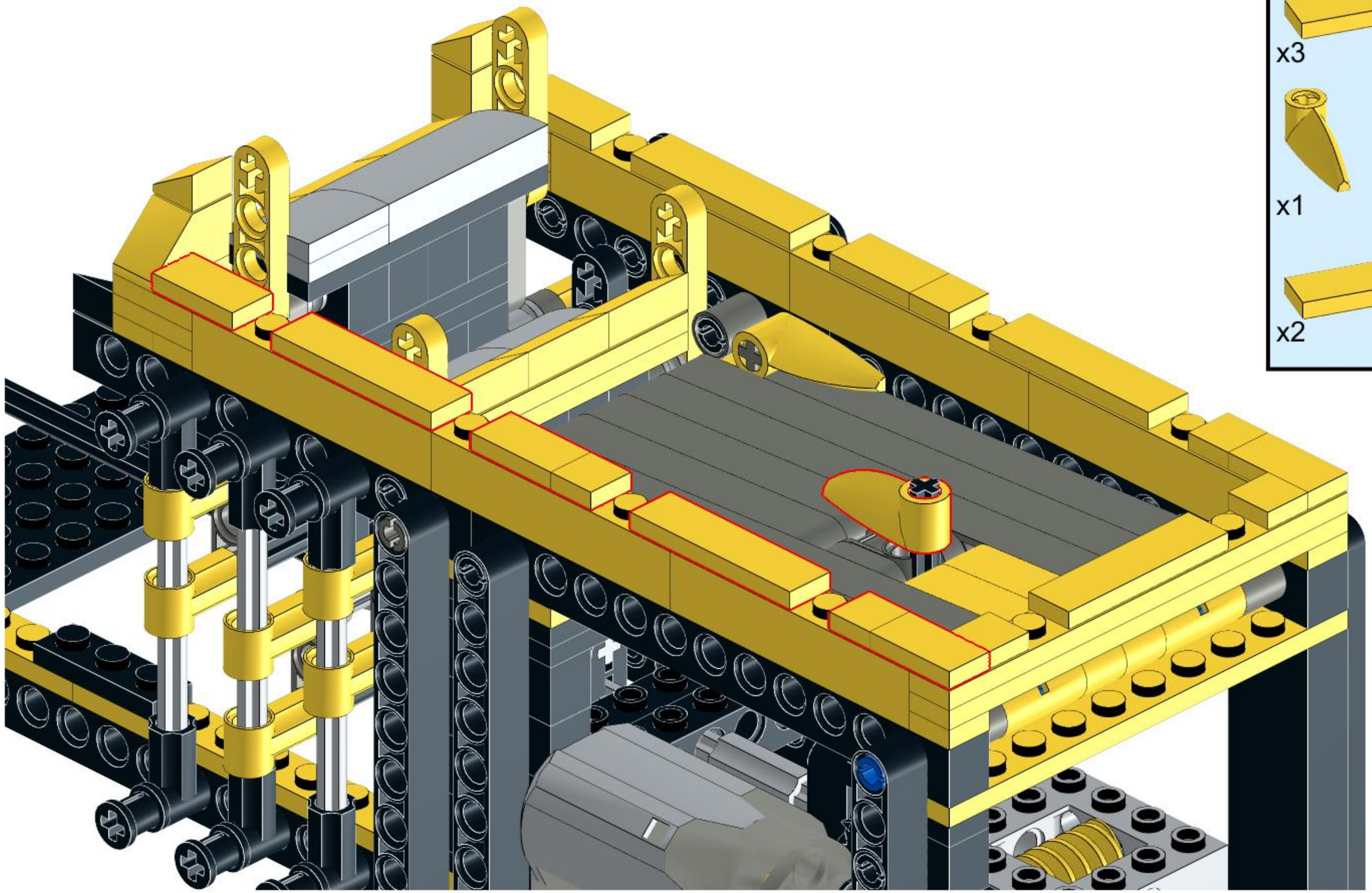

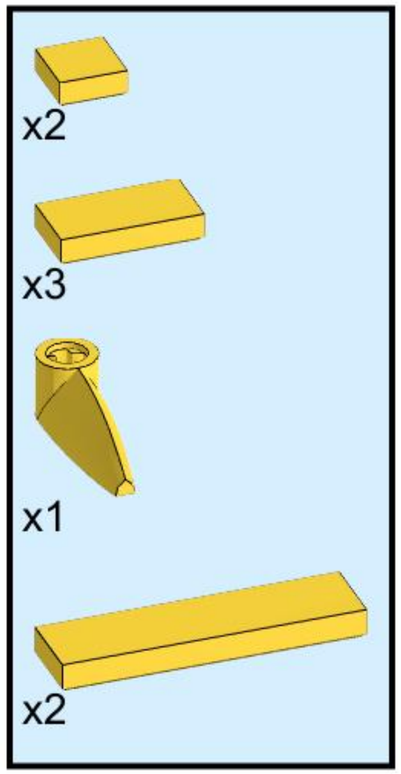

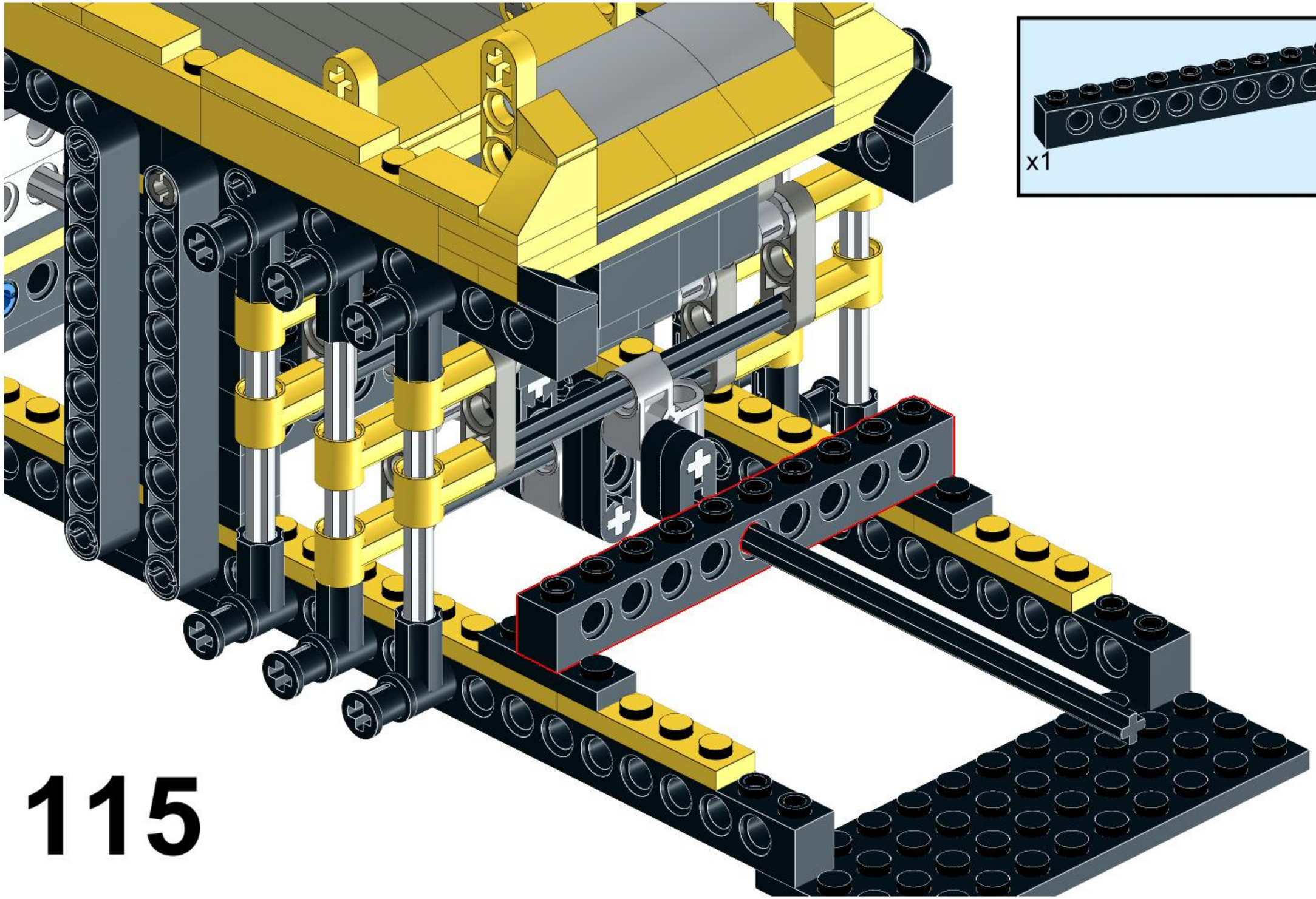

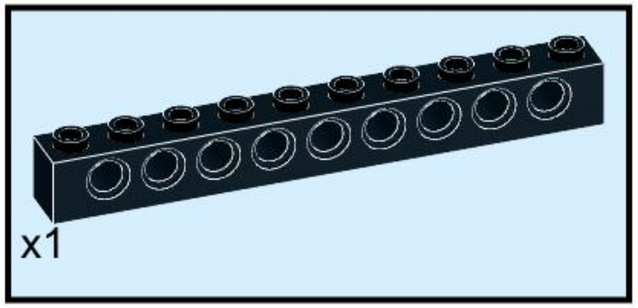

115

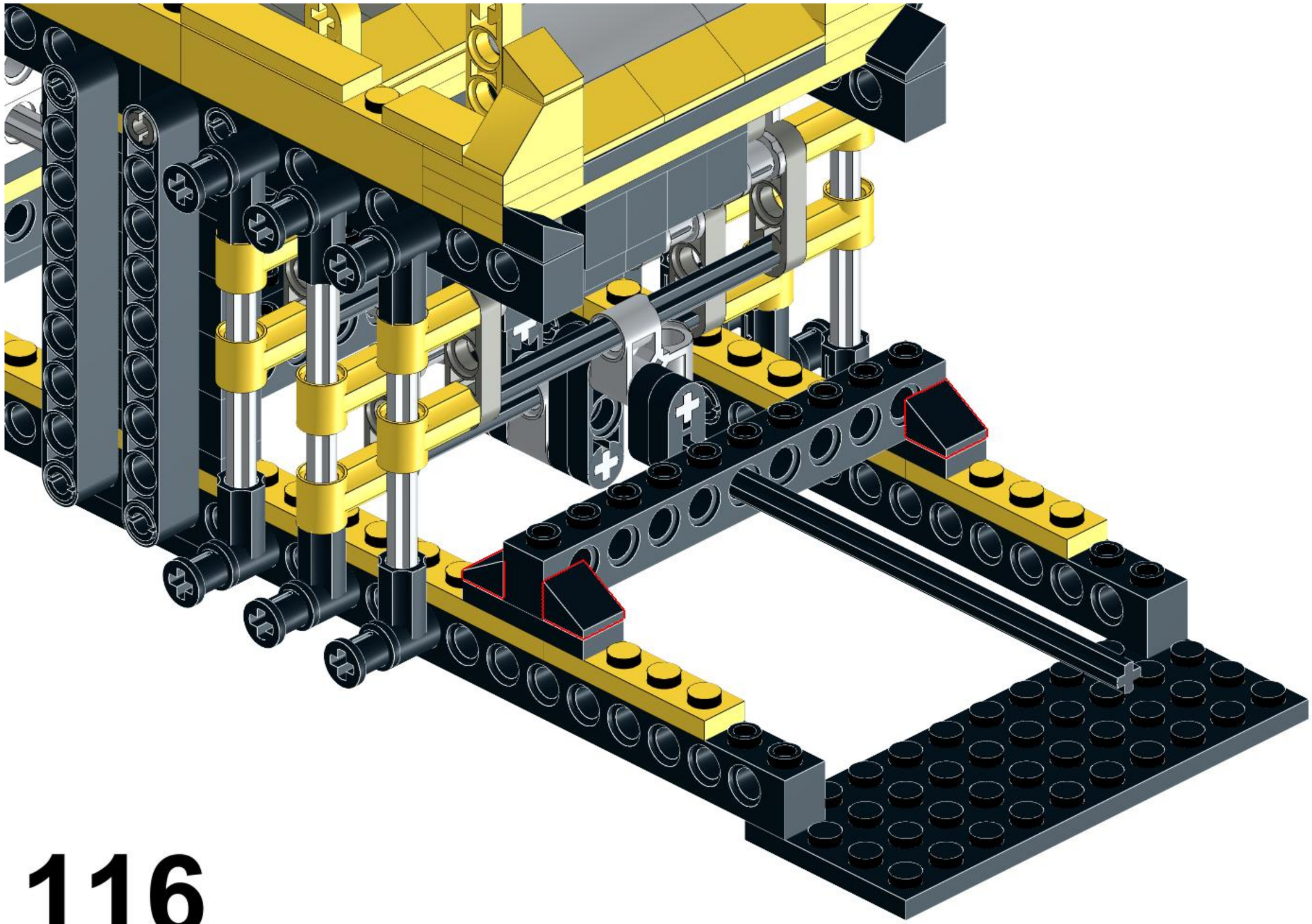

116

117

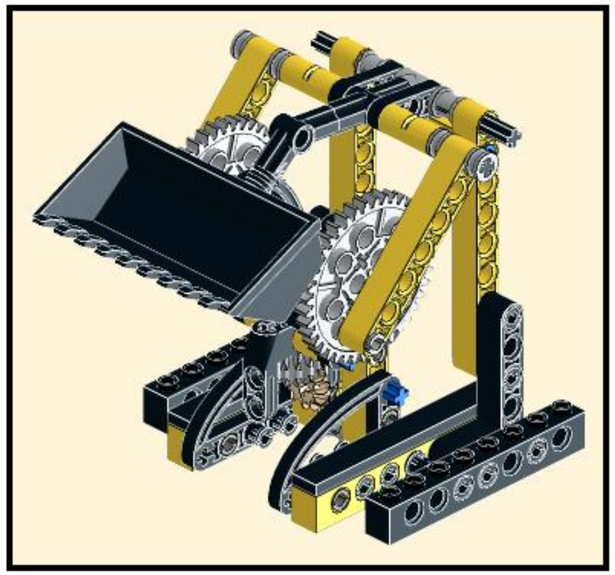

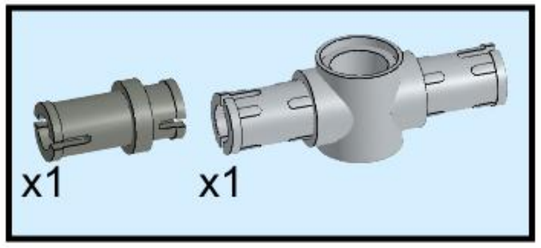

118

119

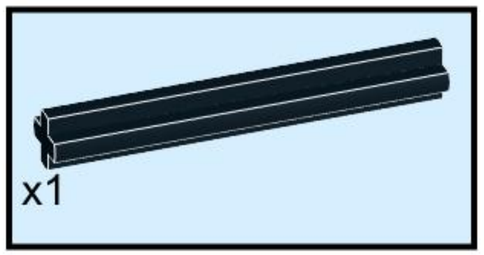

120

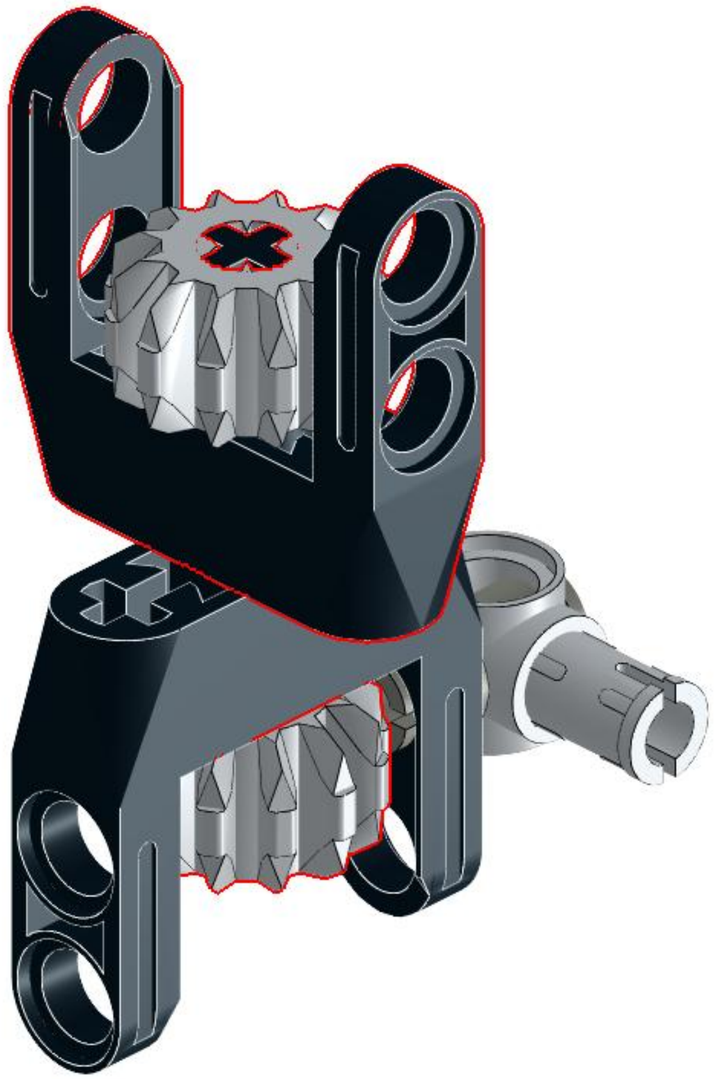

121

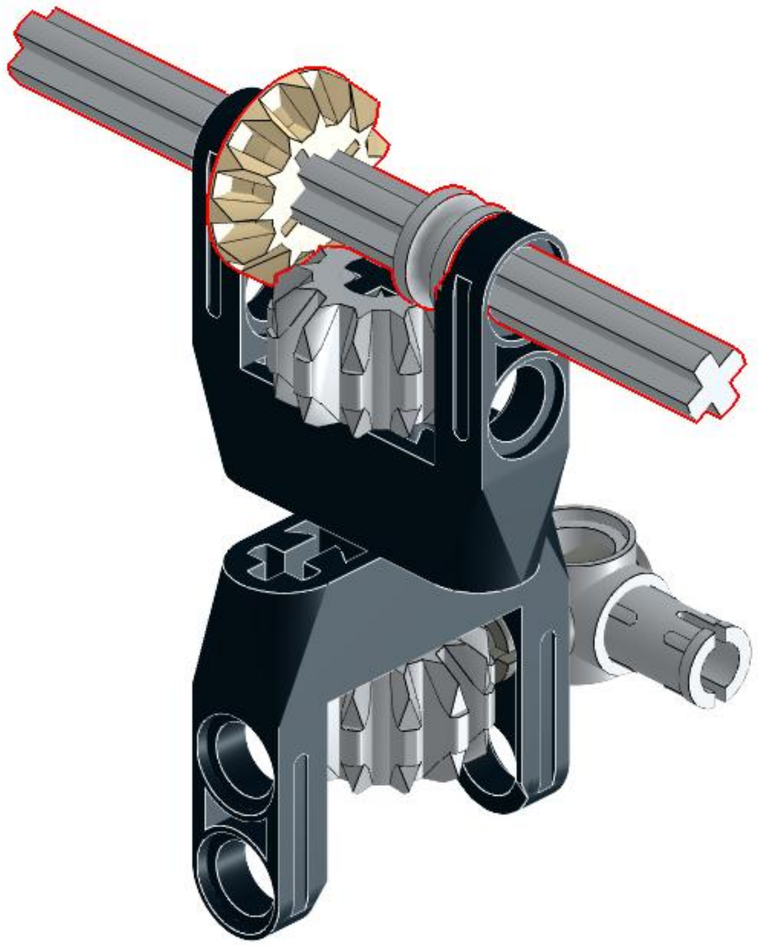

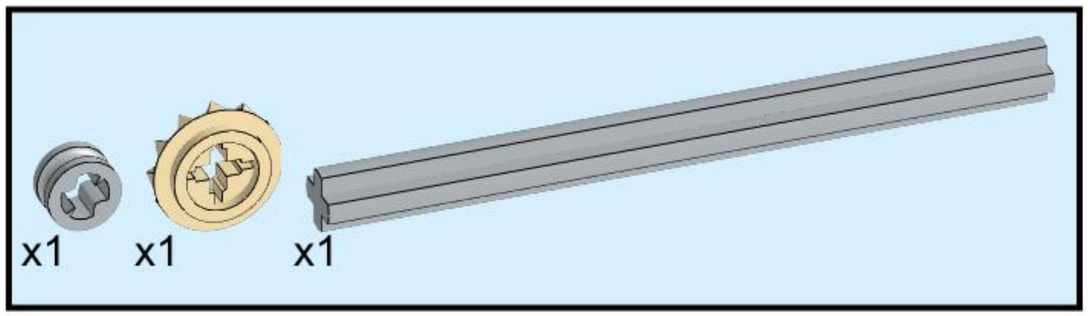

122

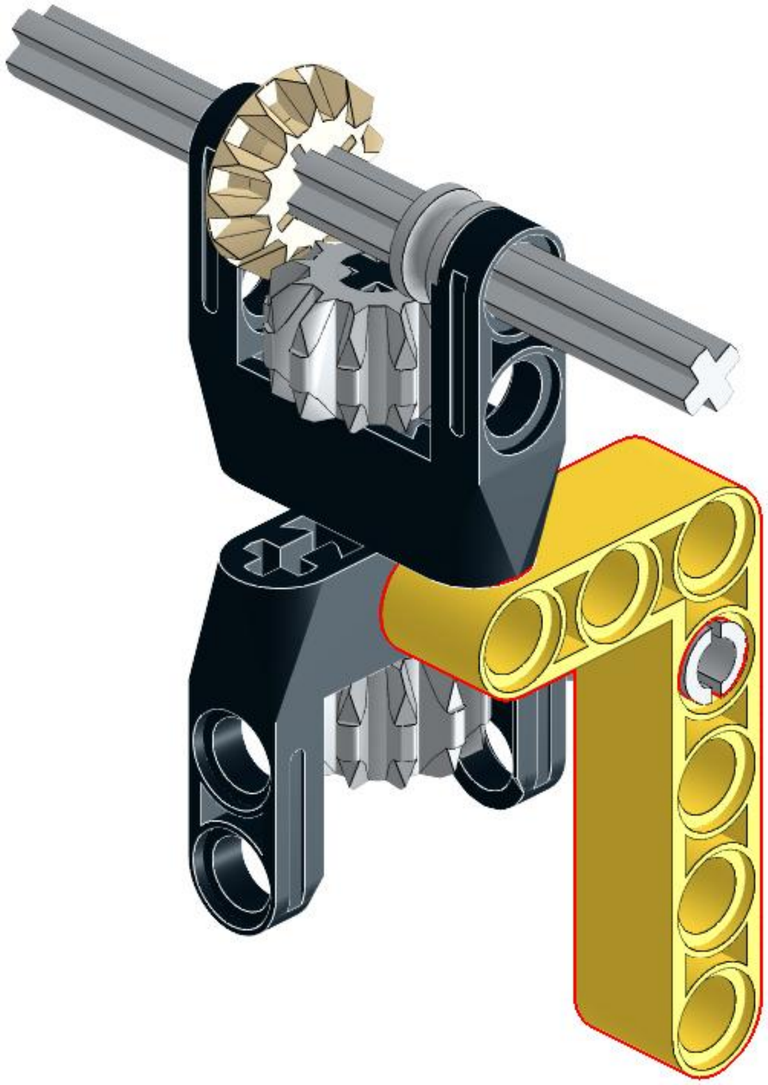

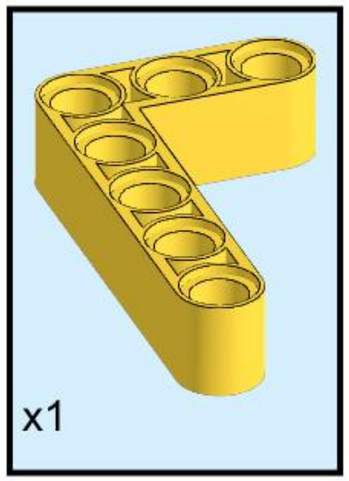

123

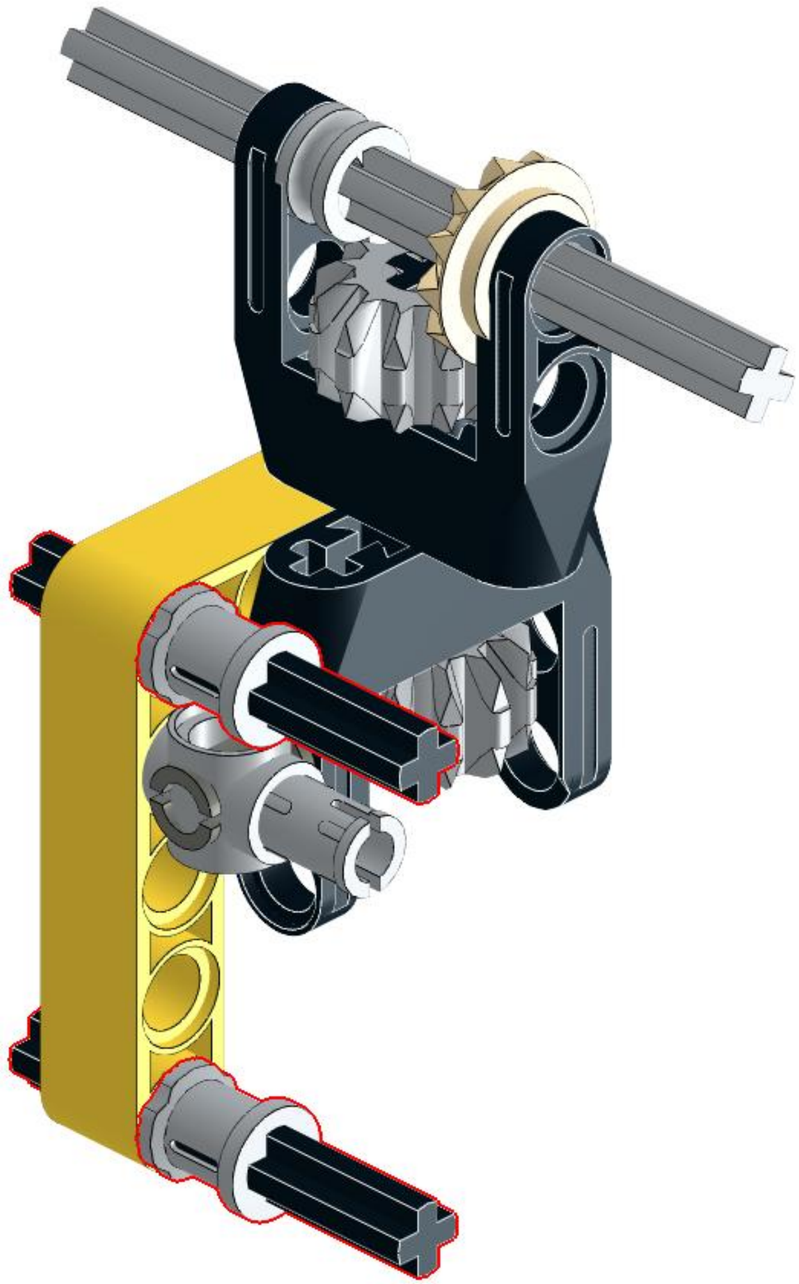

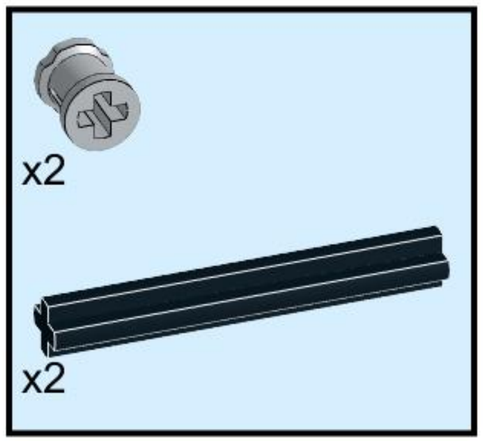

124

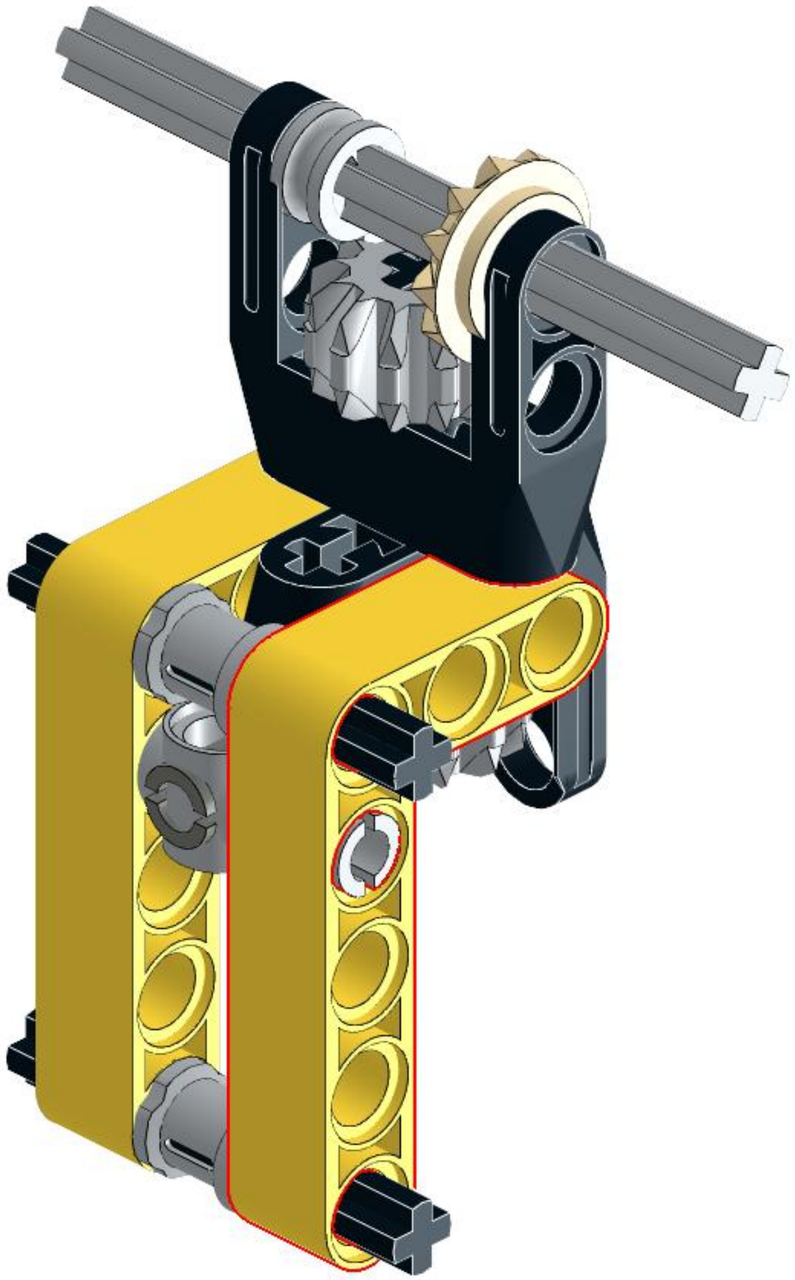

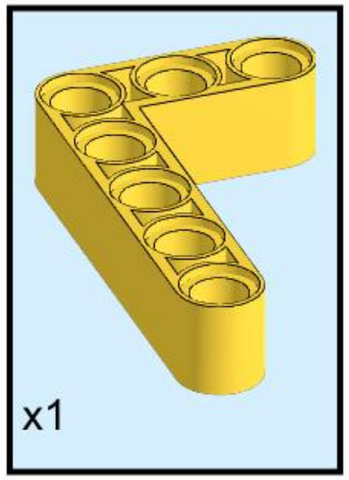

125

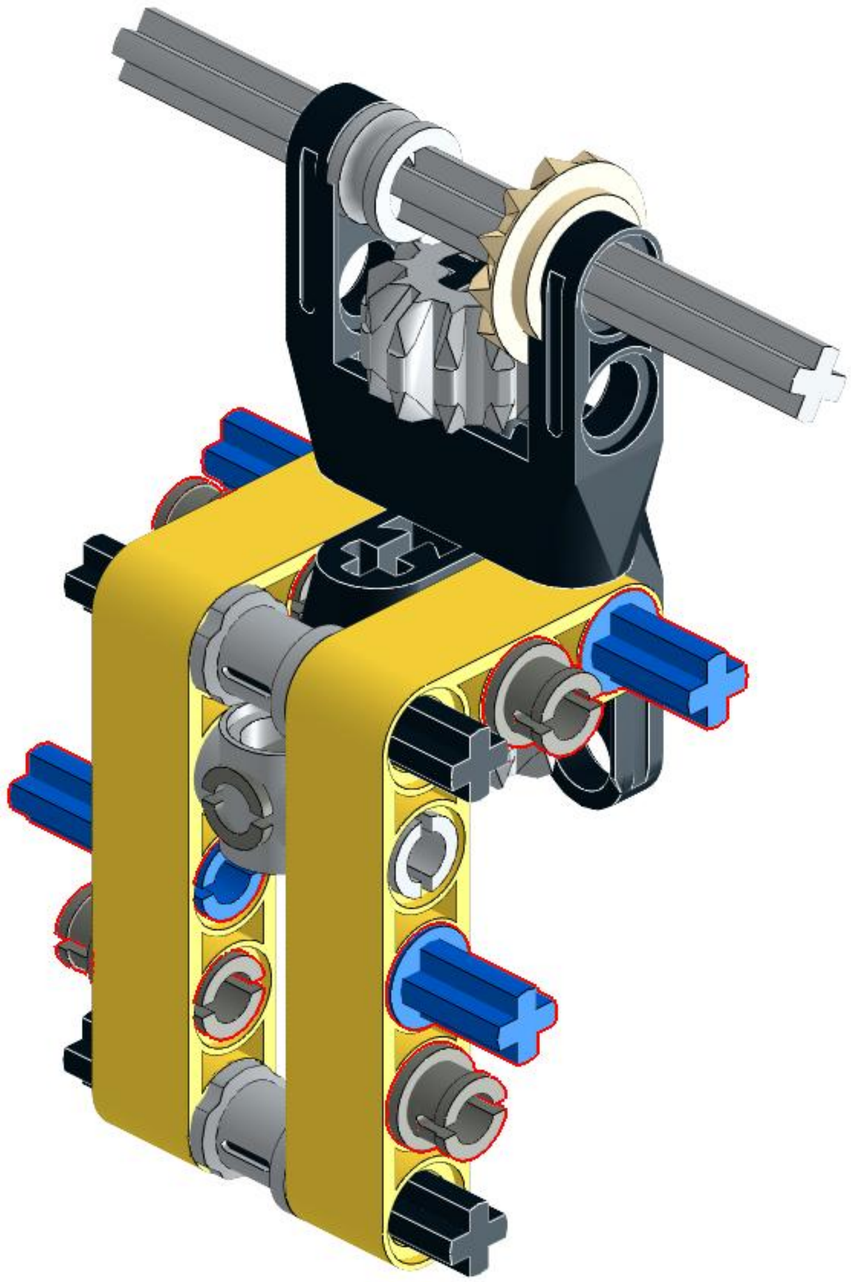

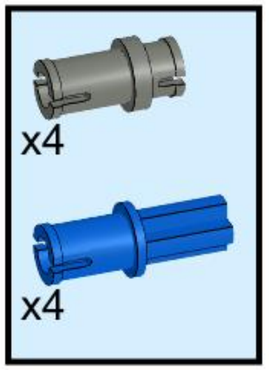

126

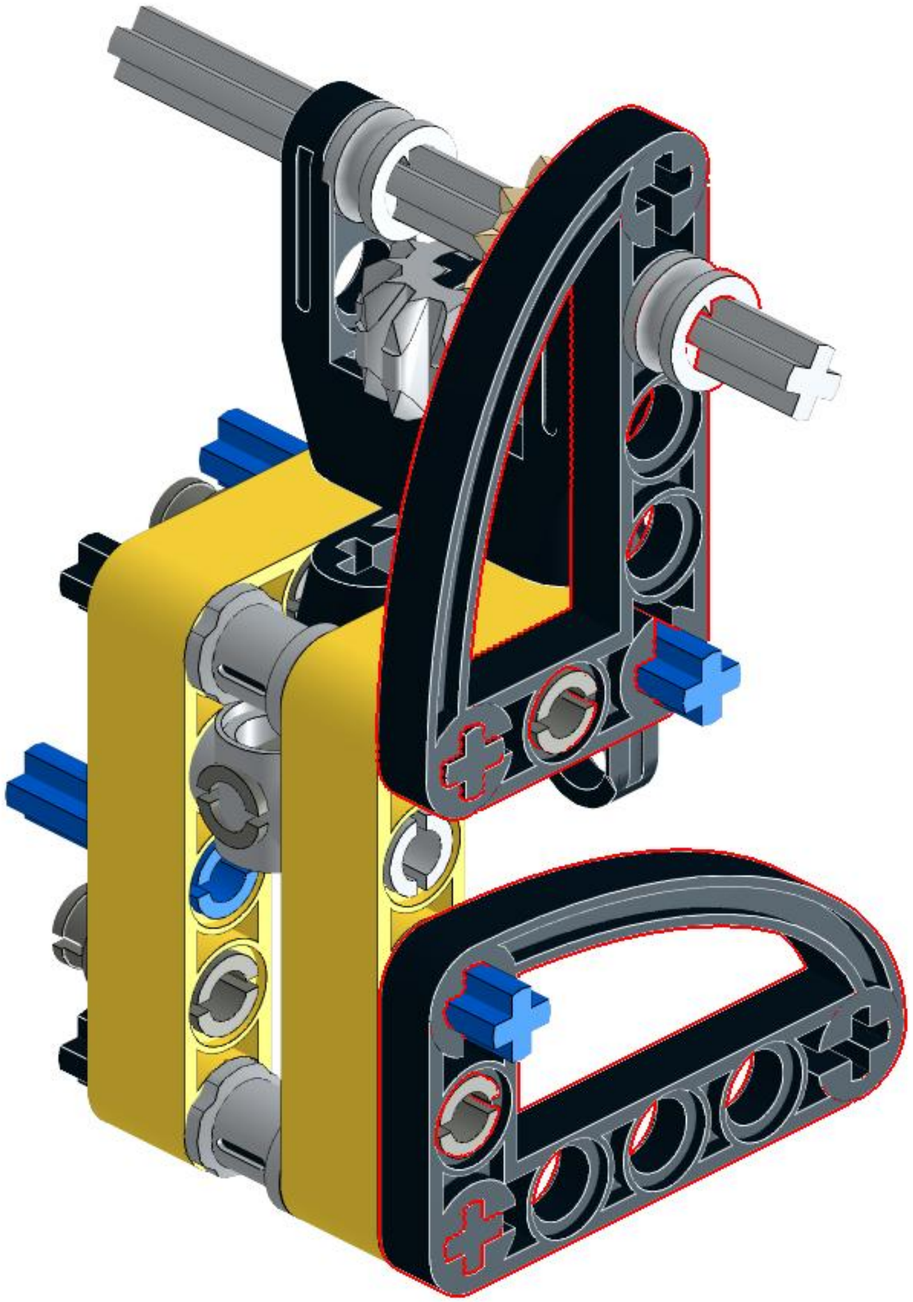

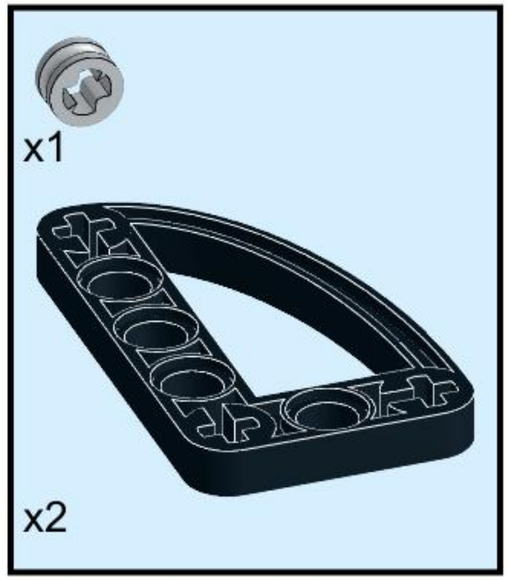

127

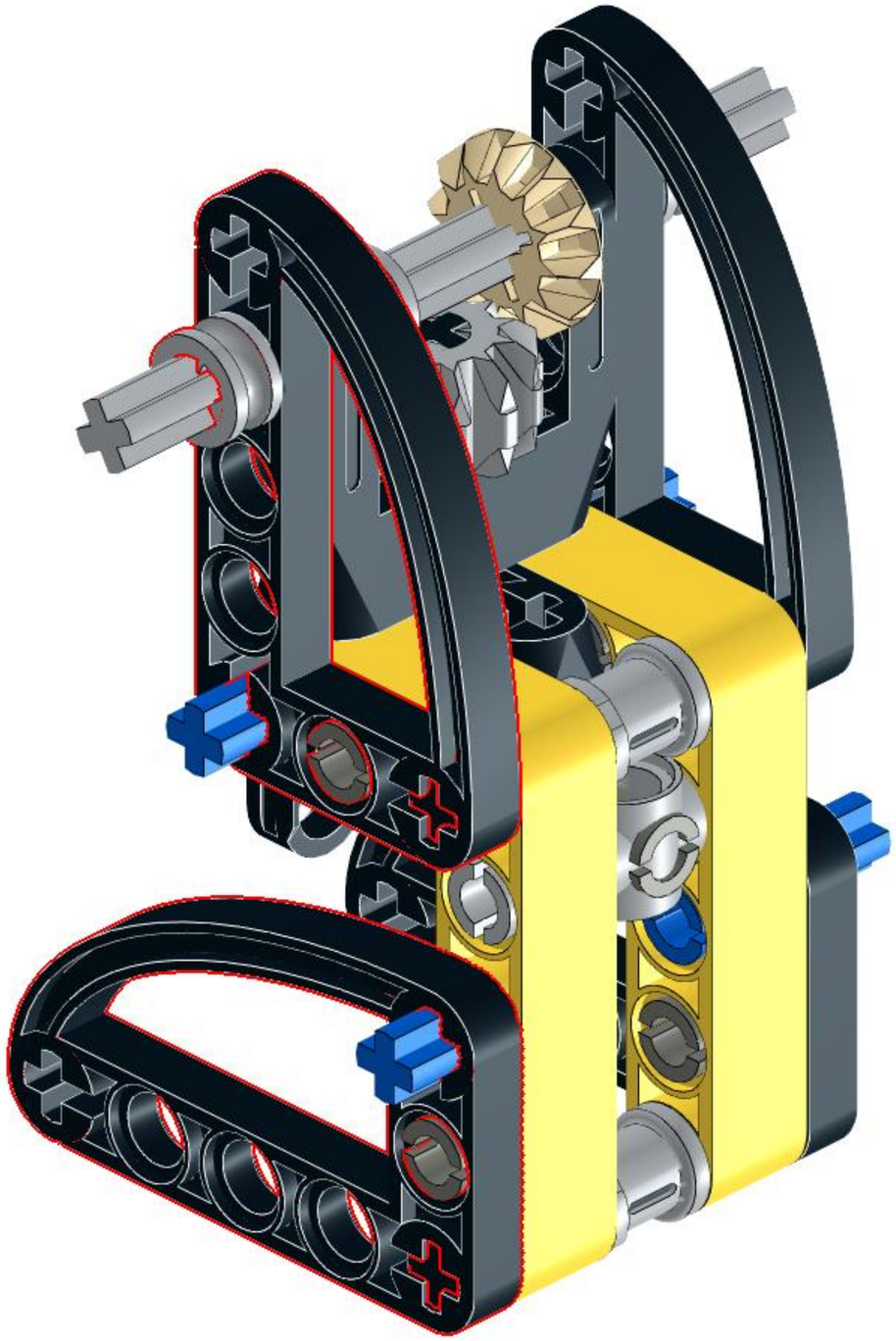

128

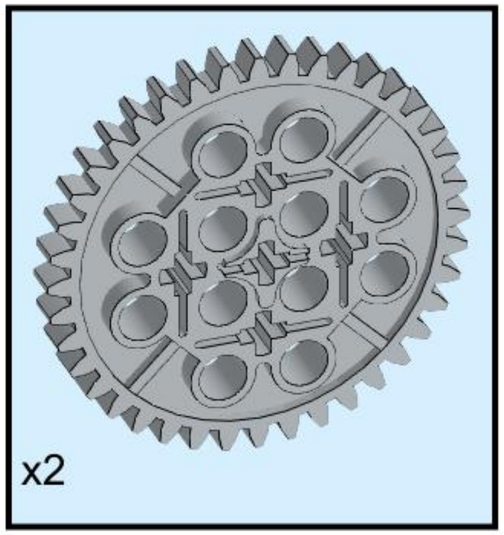

129

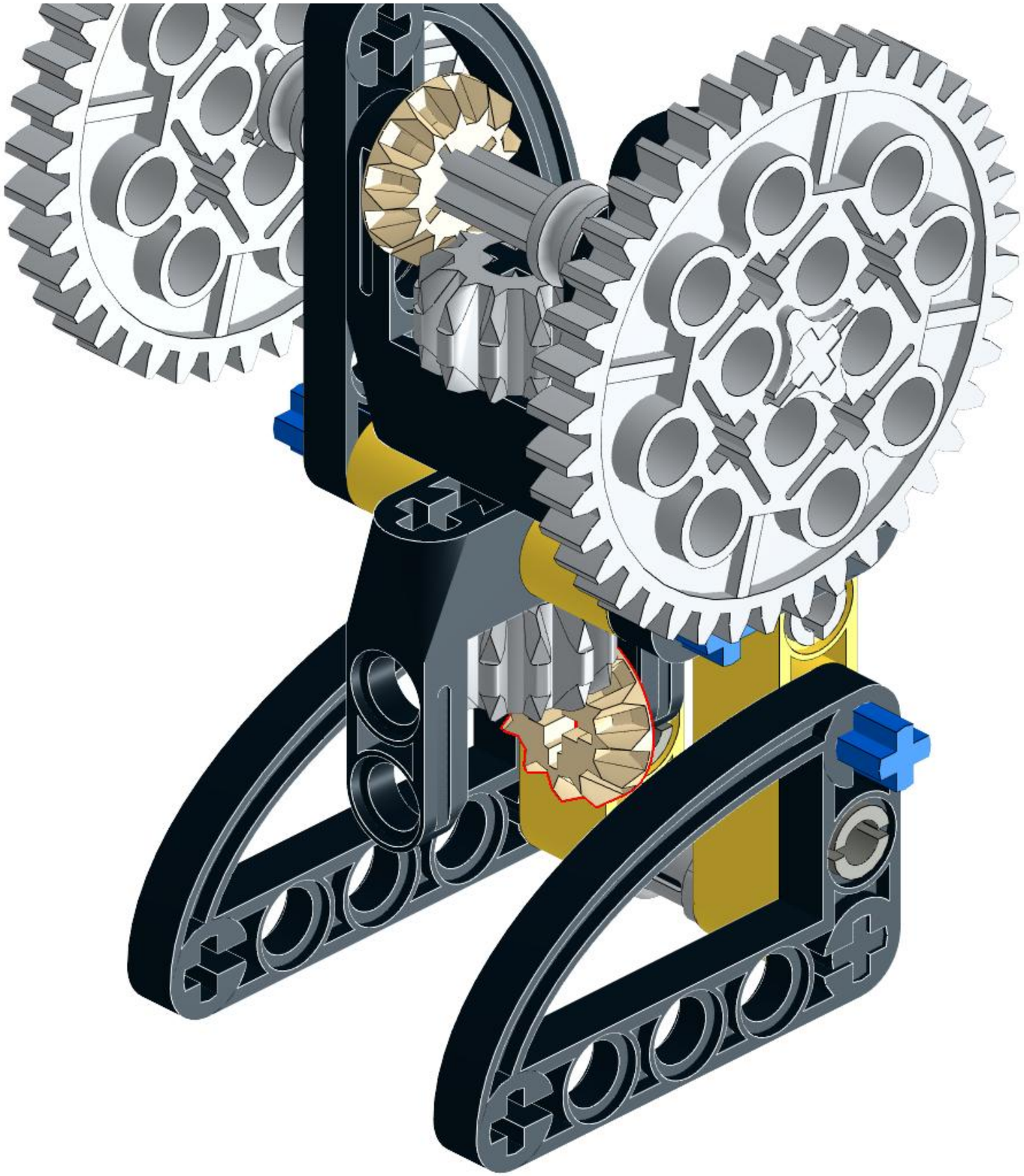

The main drive shaft will be inserted into this gear, extending past the connector by 1L

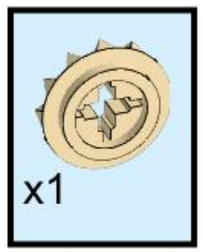

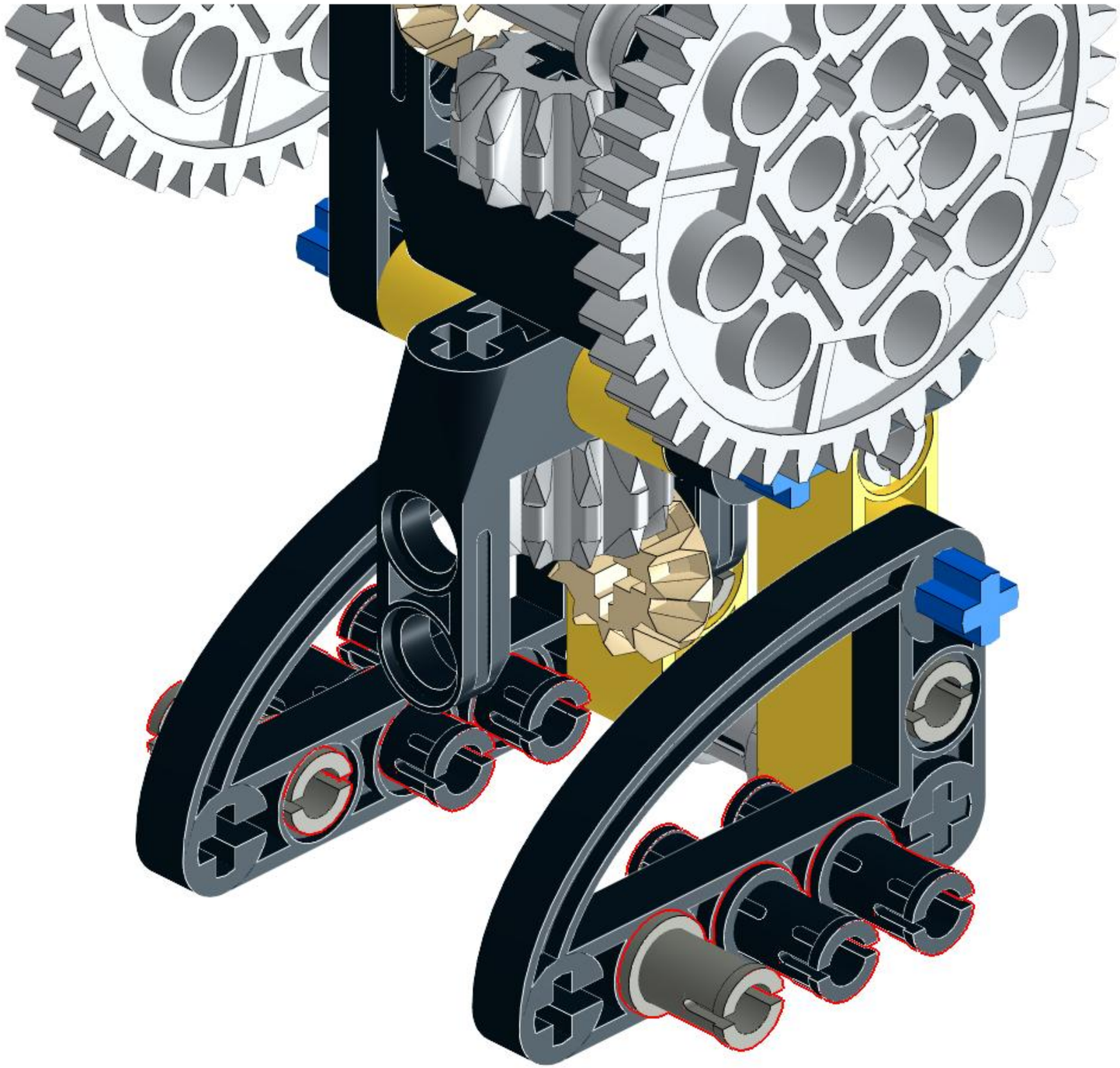

x2
x4

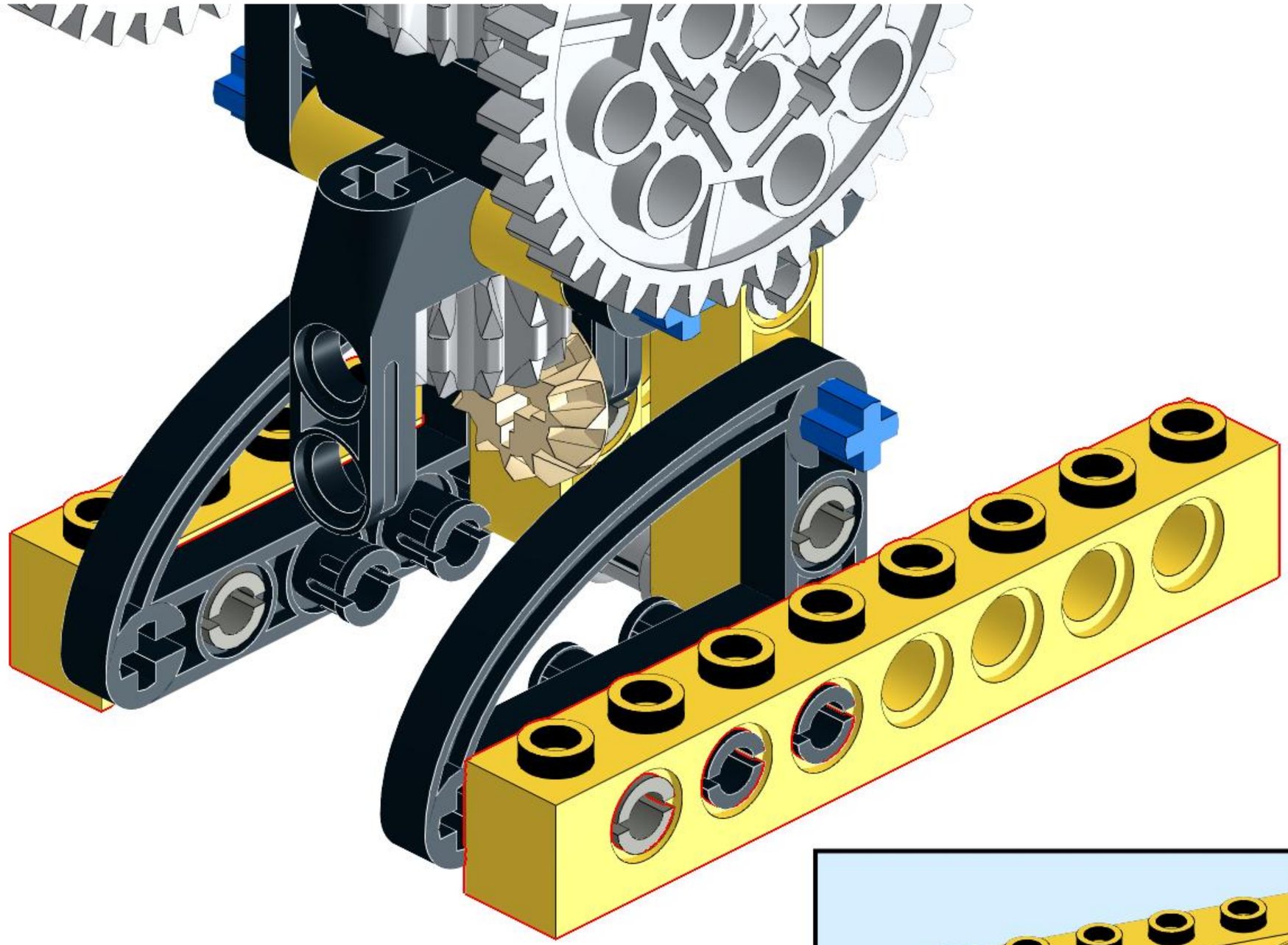

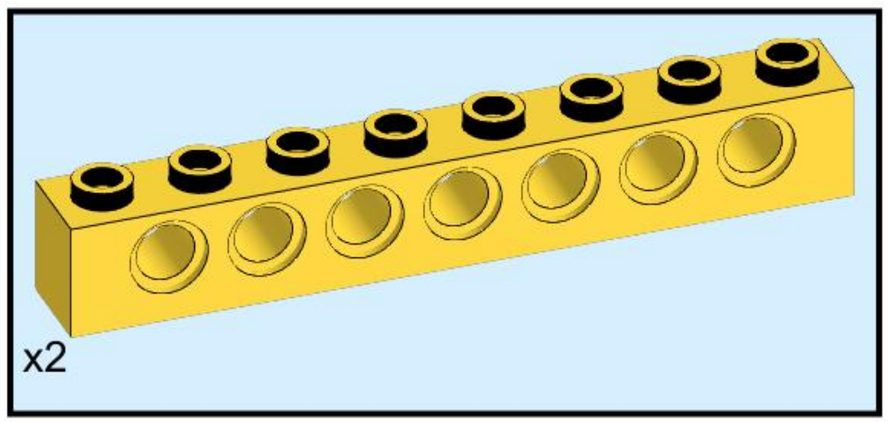
x2

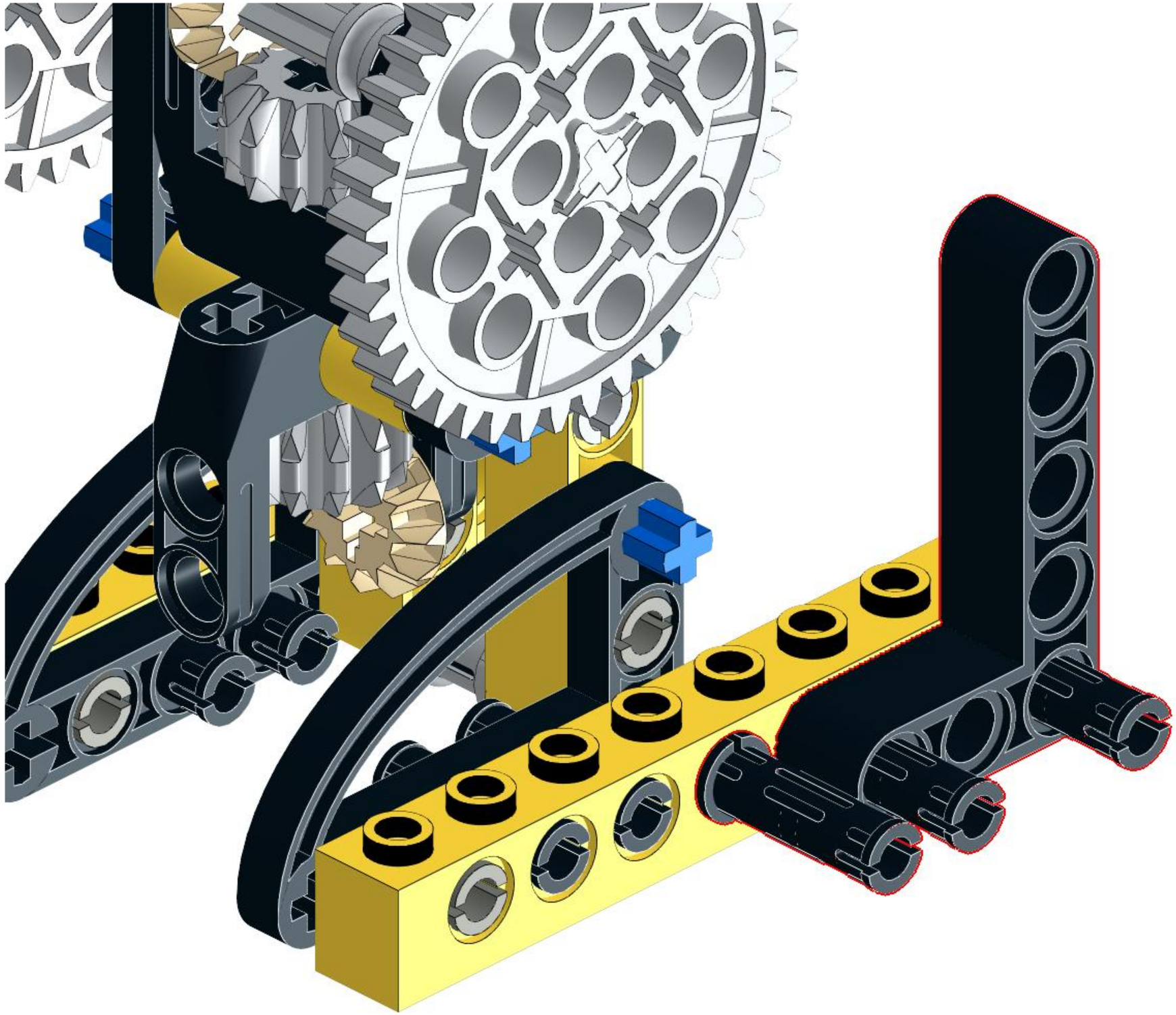

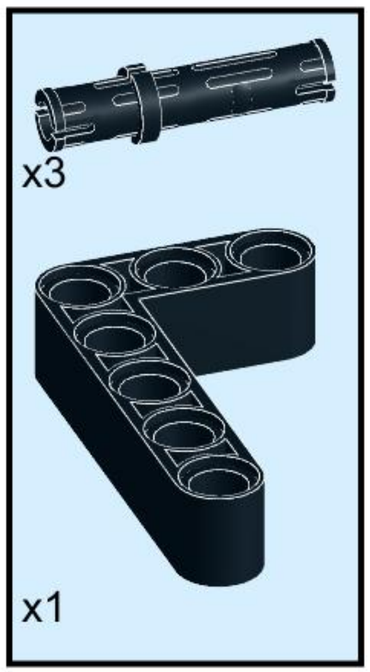
x3
x1

133

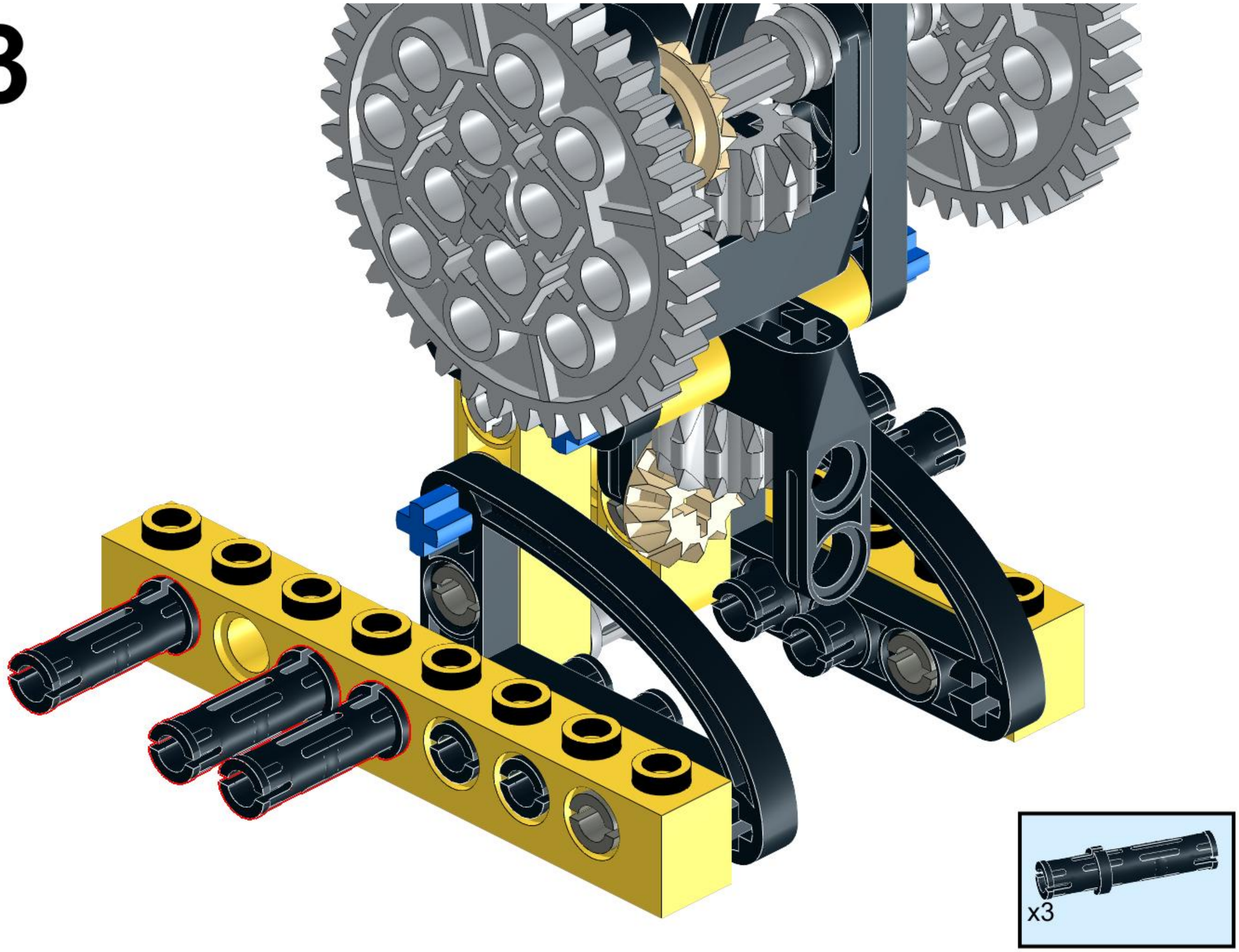

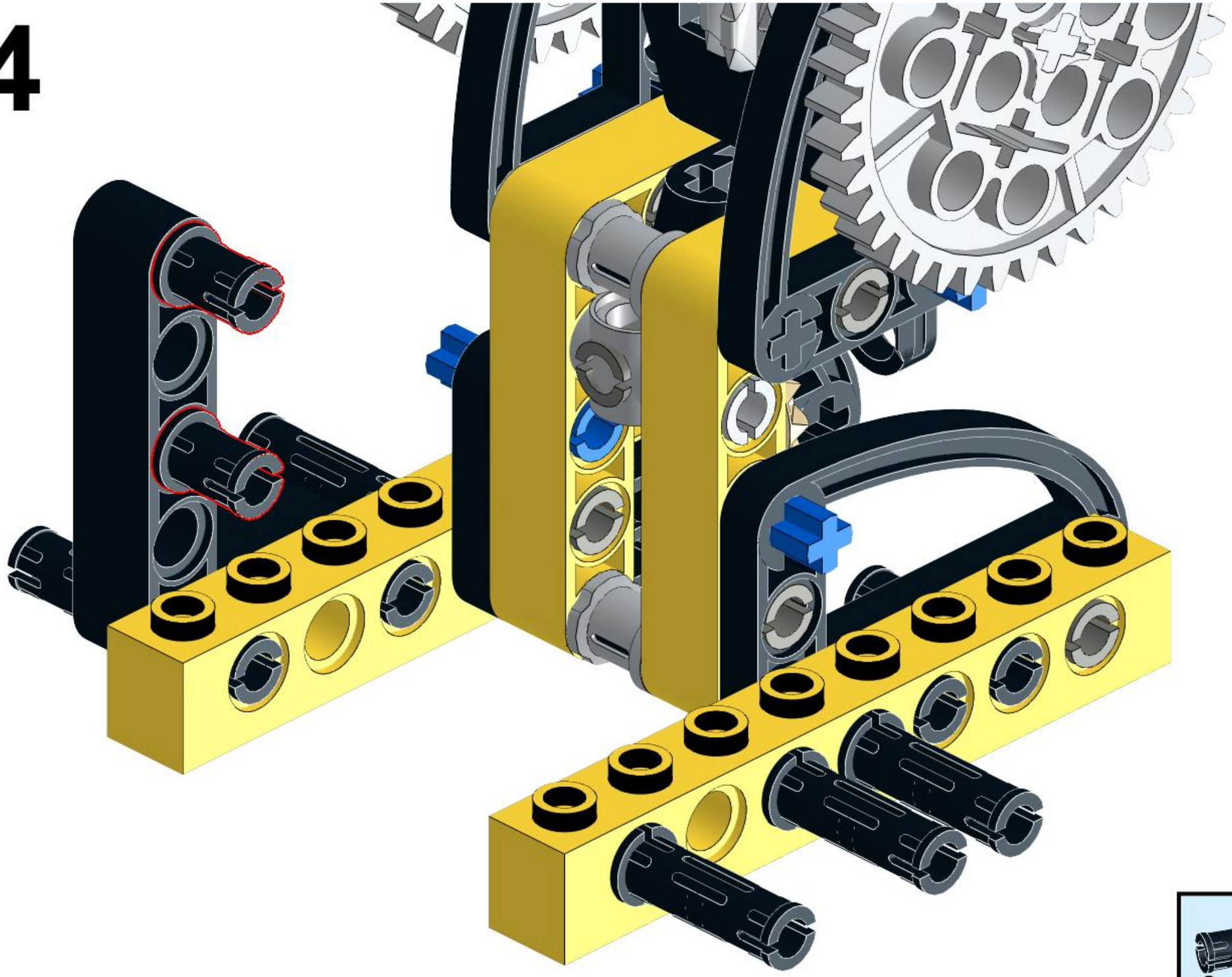

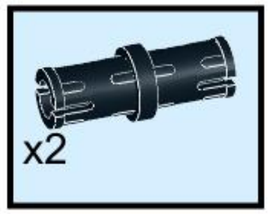
x2

135

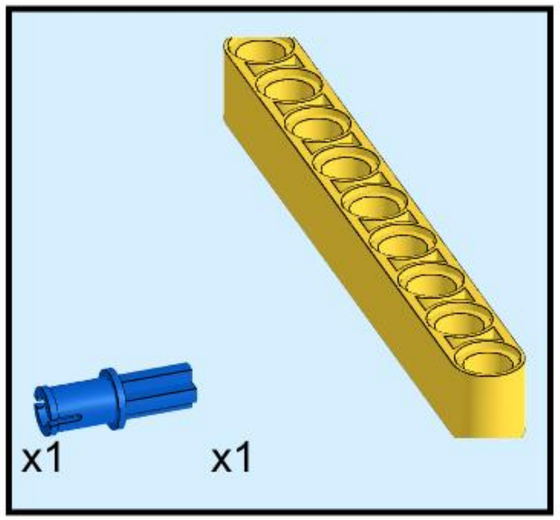

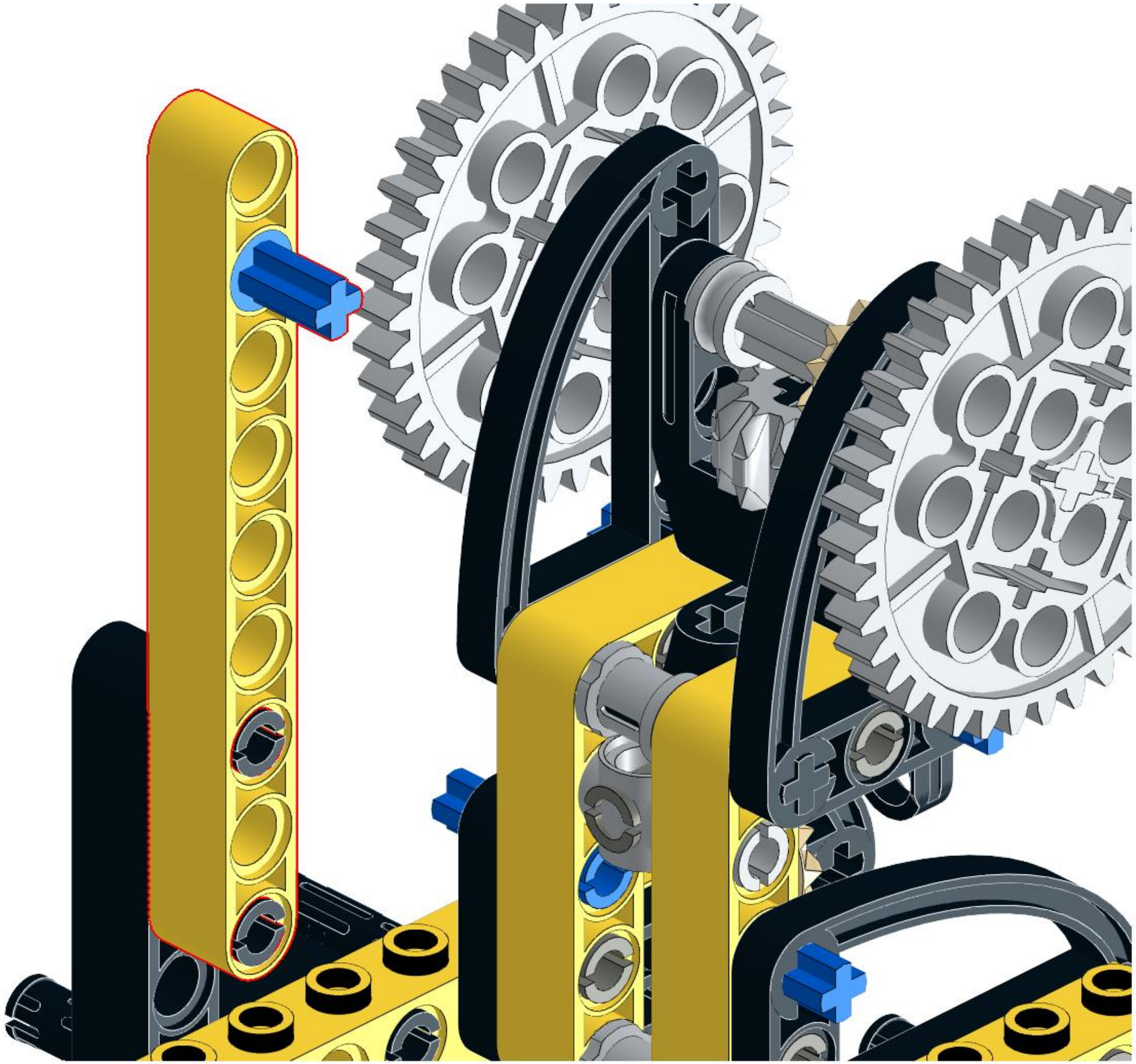

136

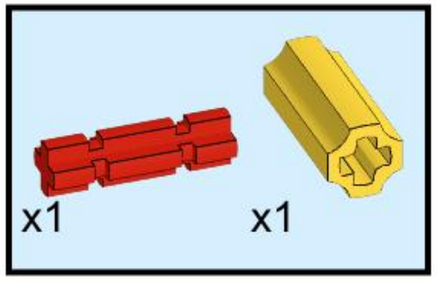

137

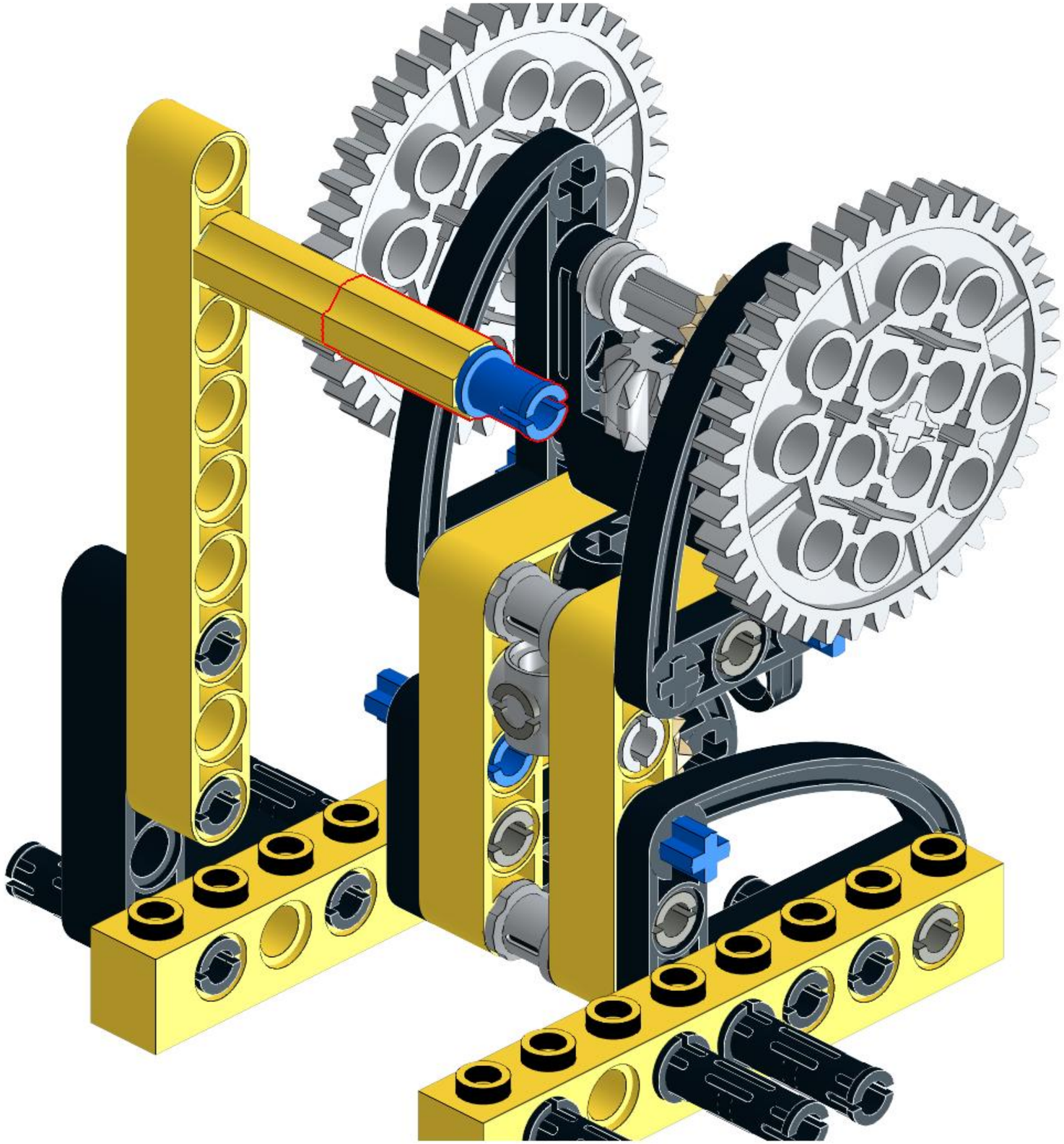

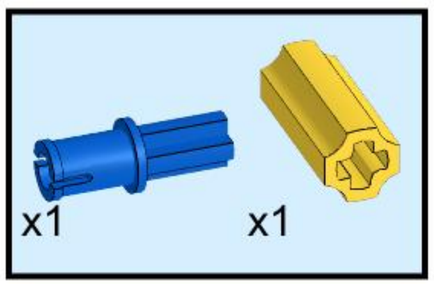

138

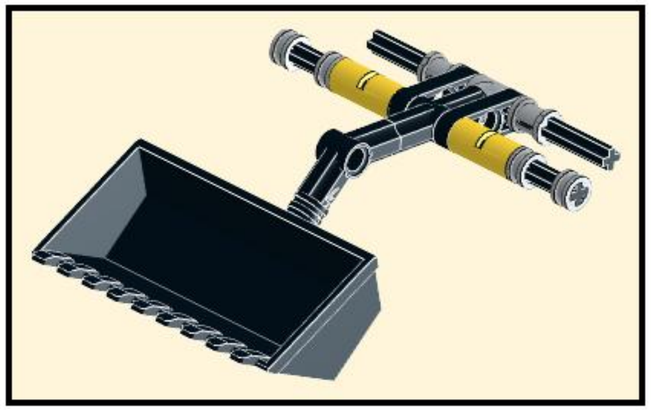

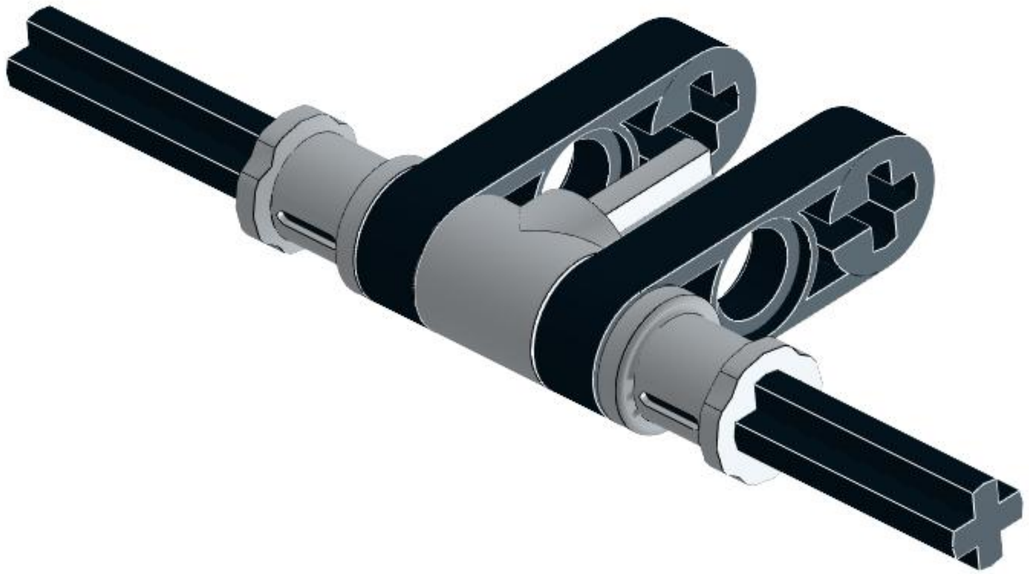

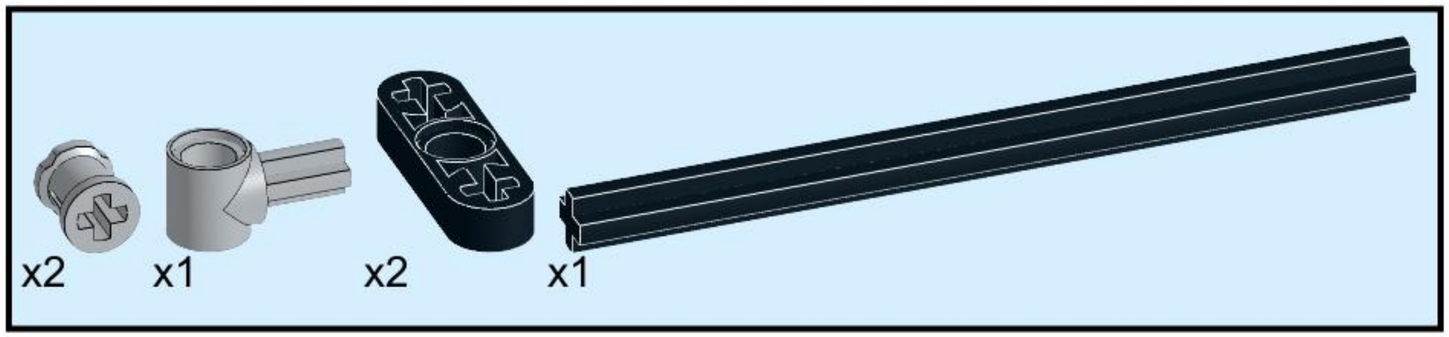

139

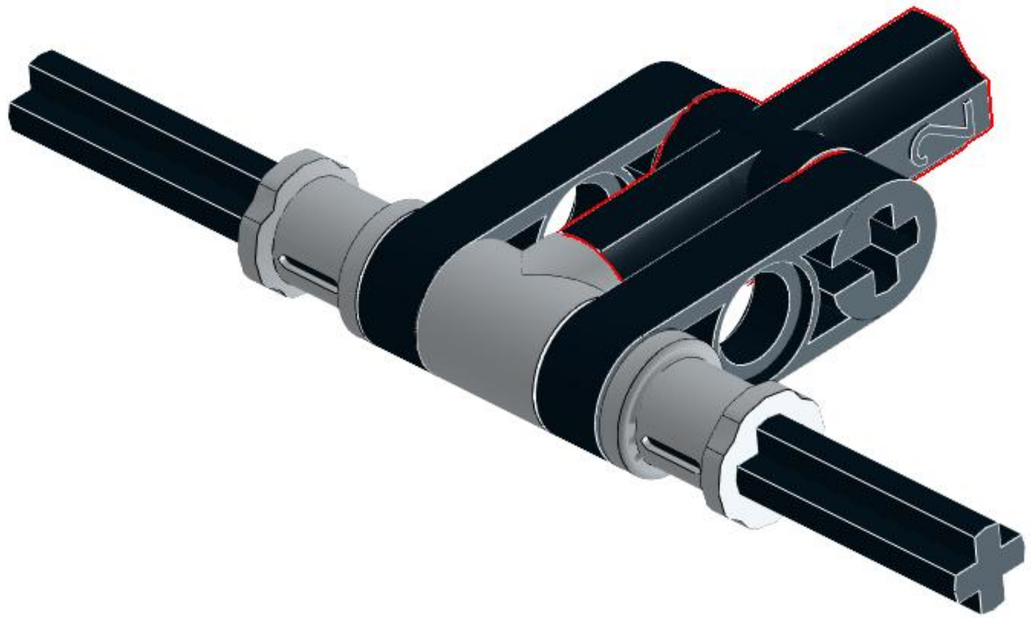

140

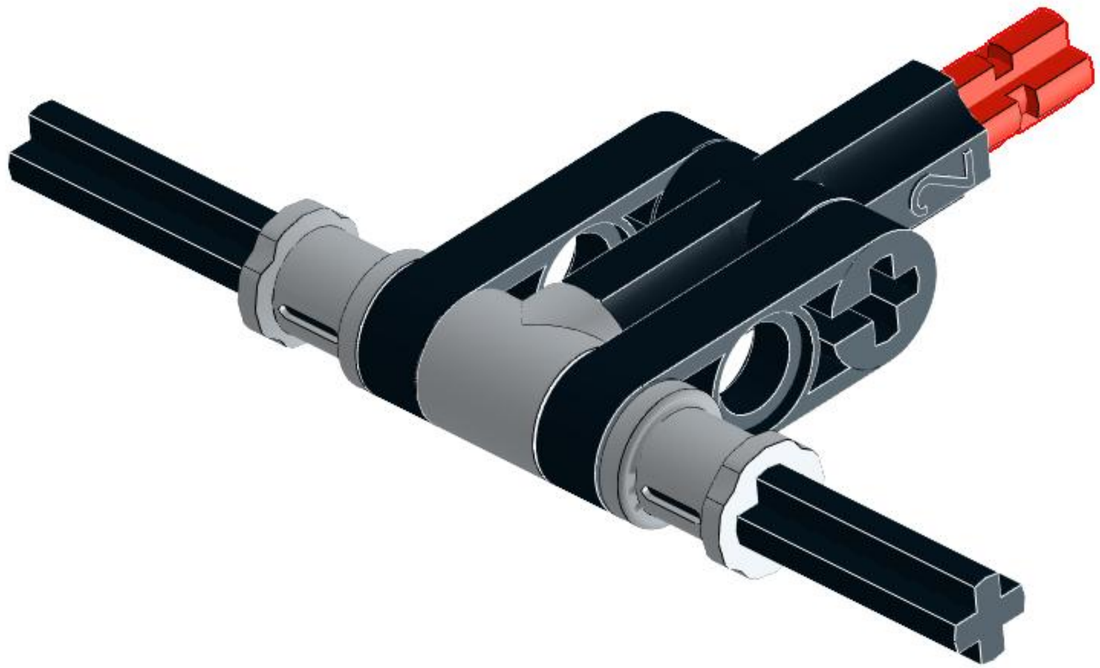

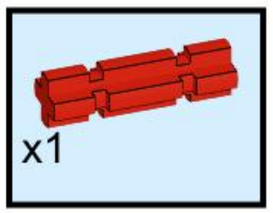

141

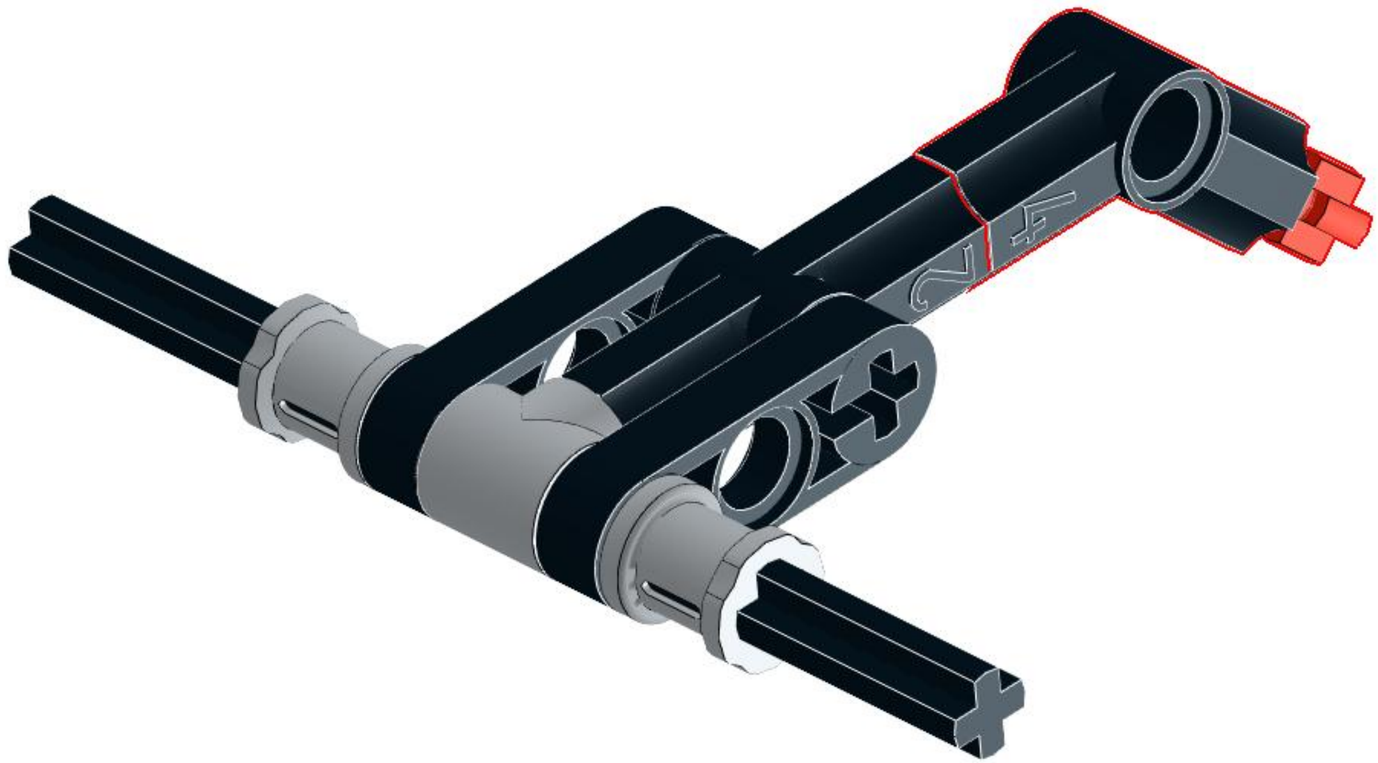

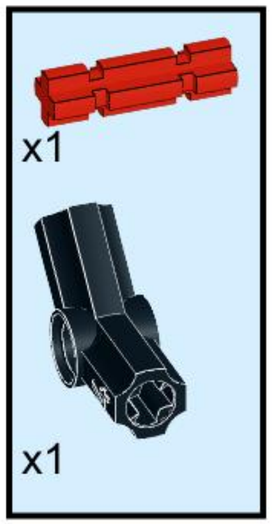

142

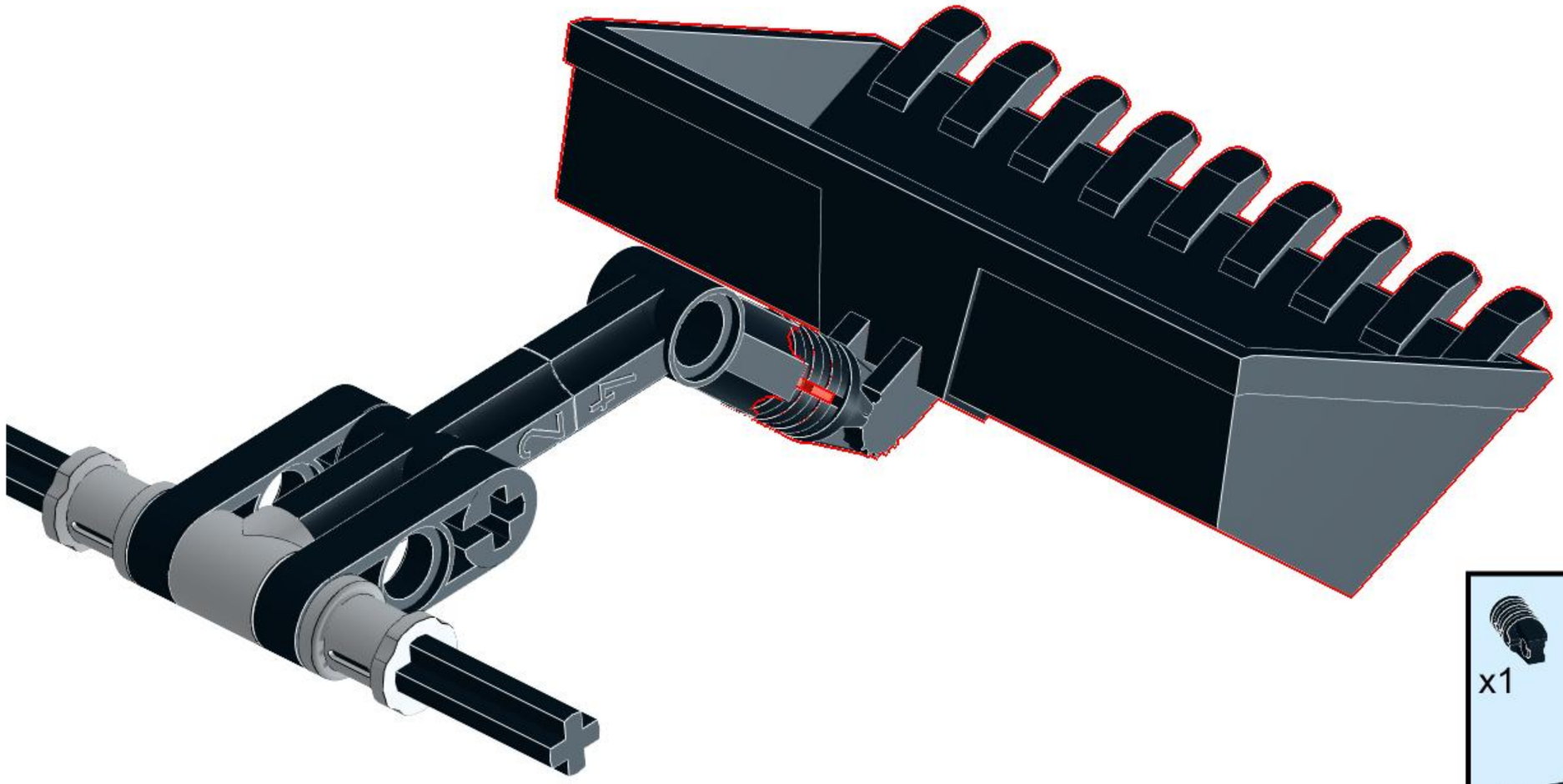

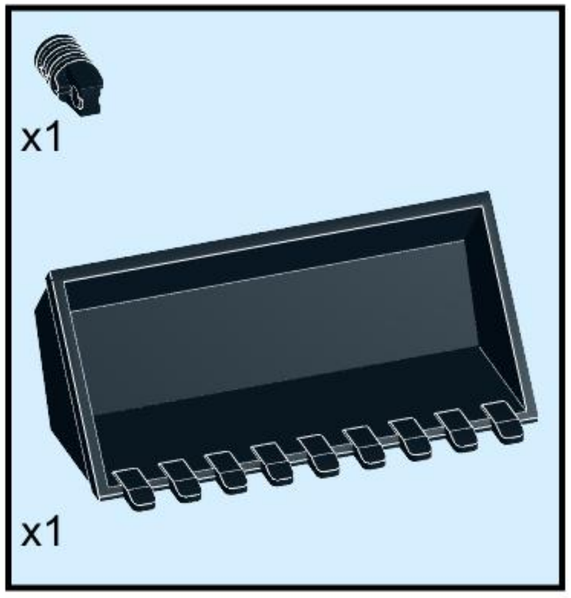

143

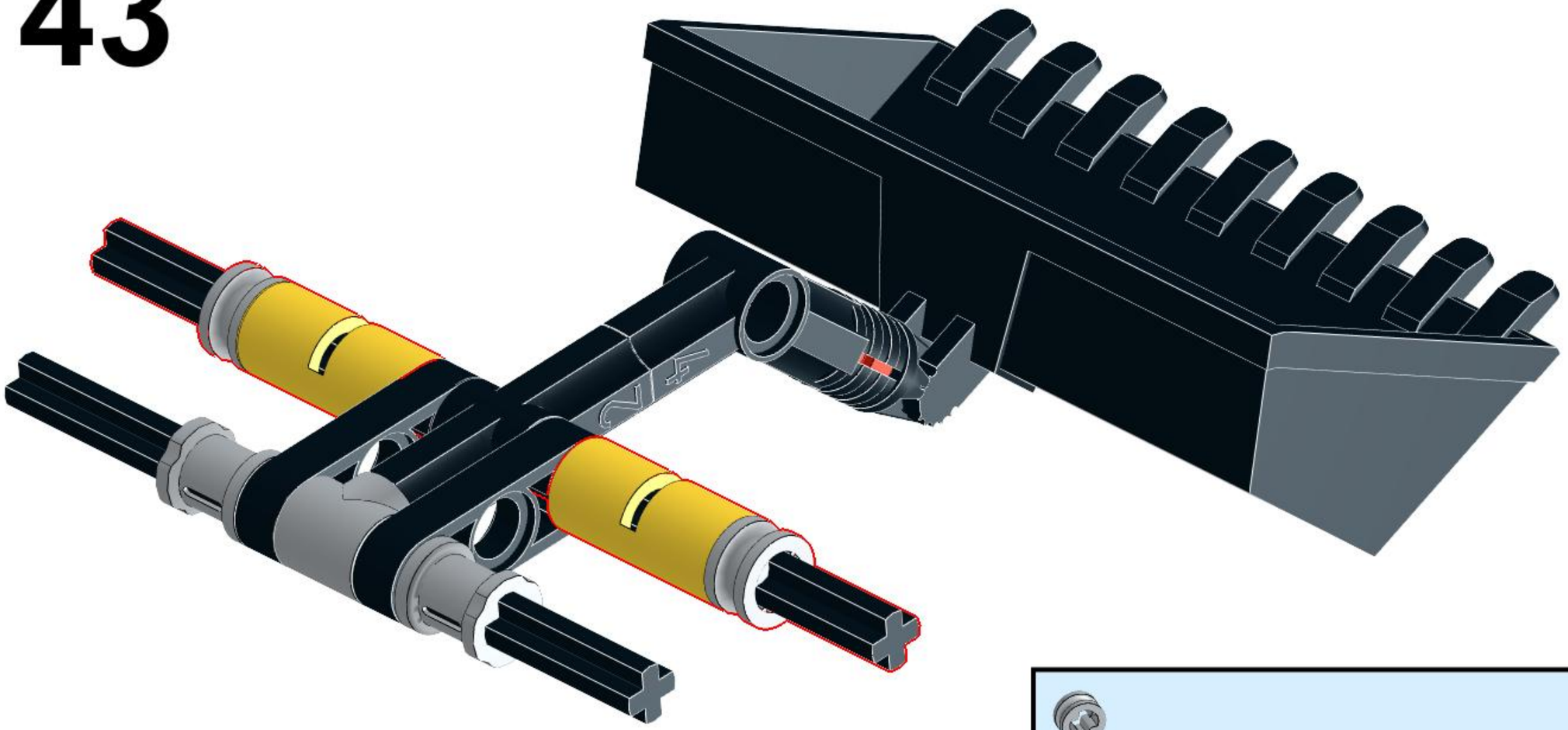

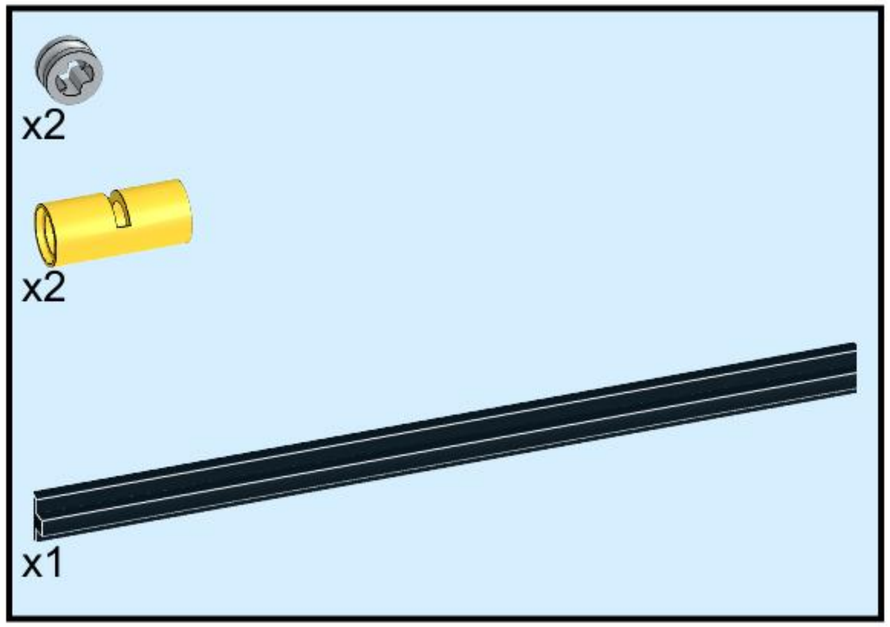

144

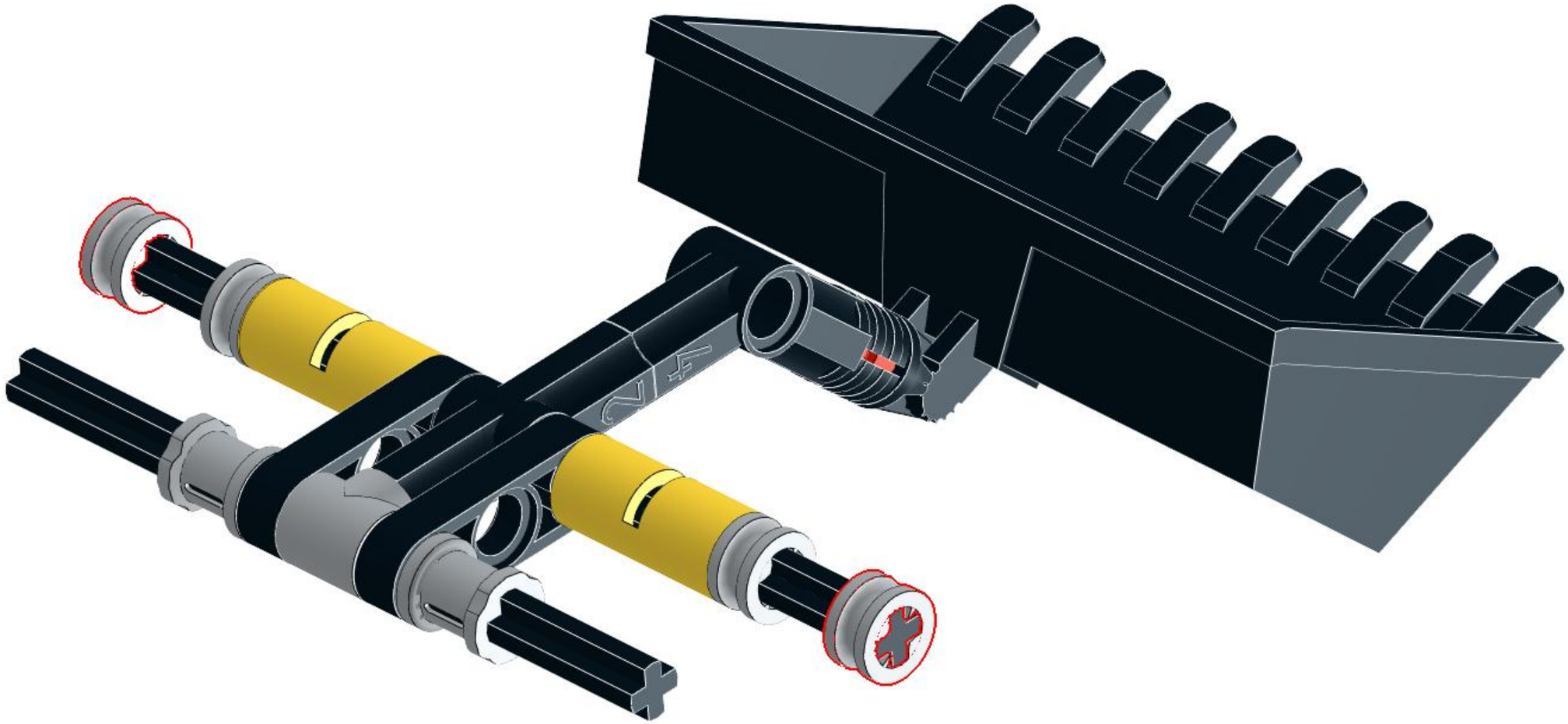

145

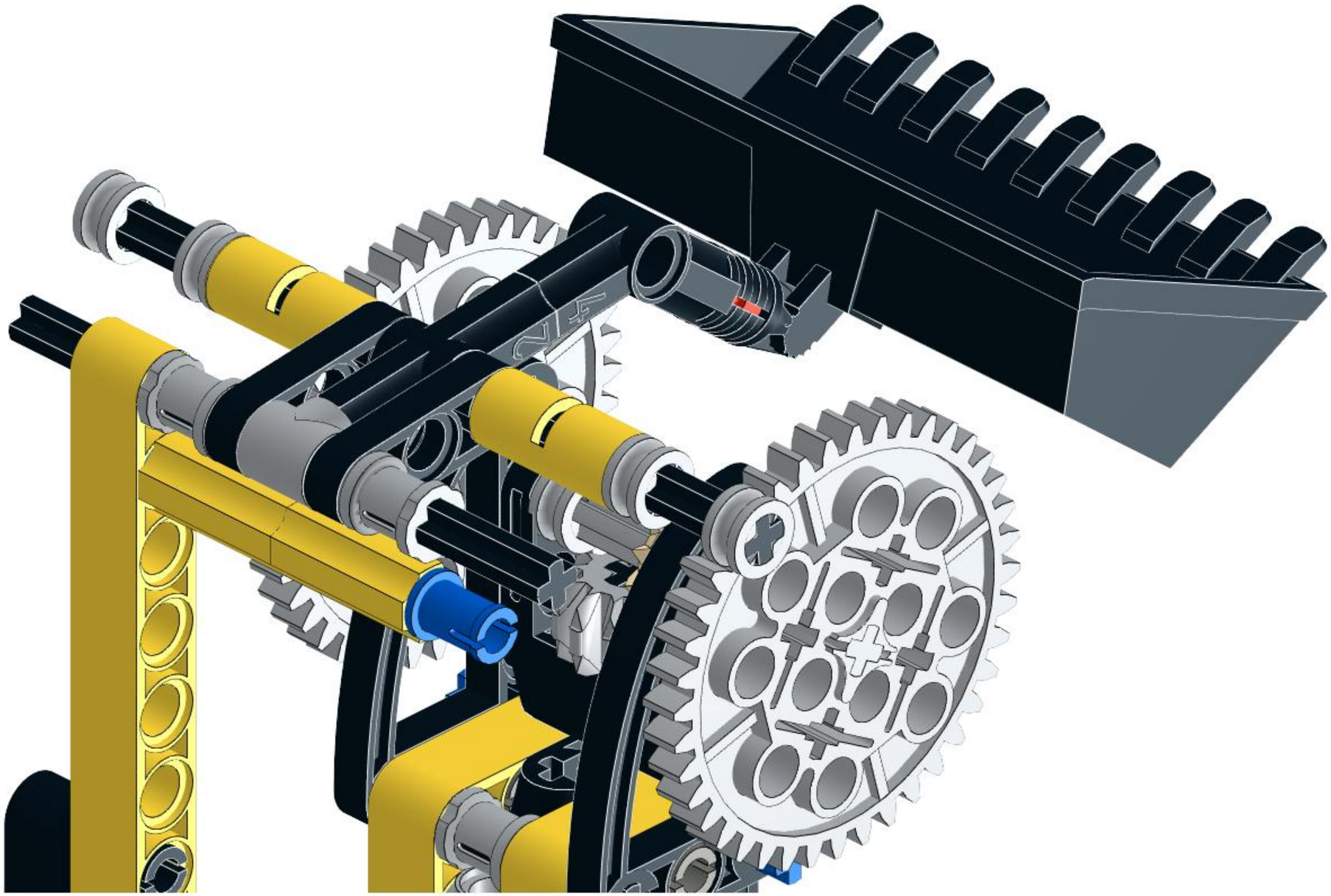

146

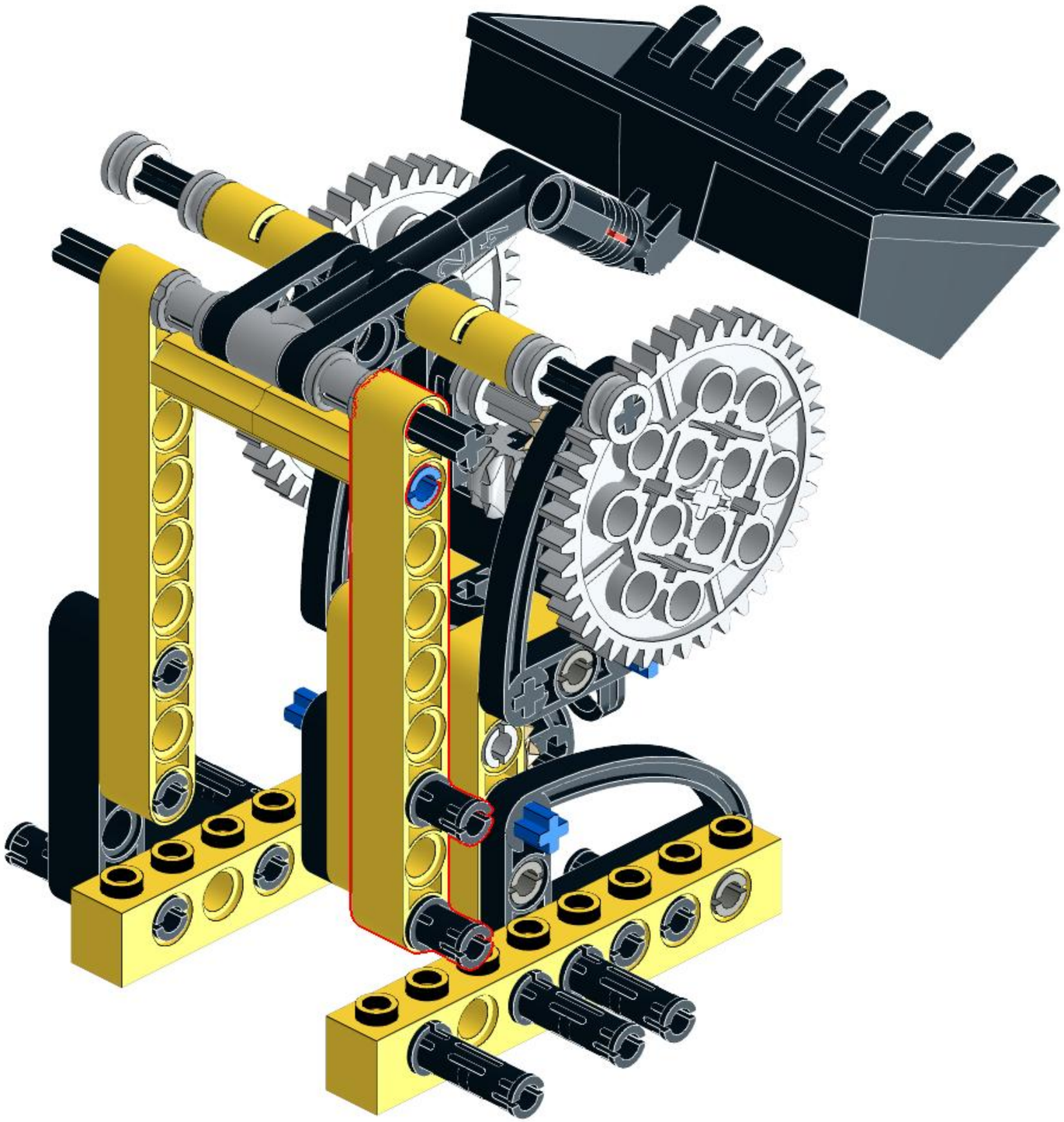

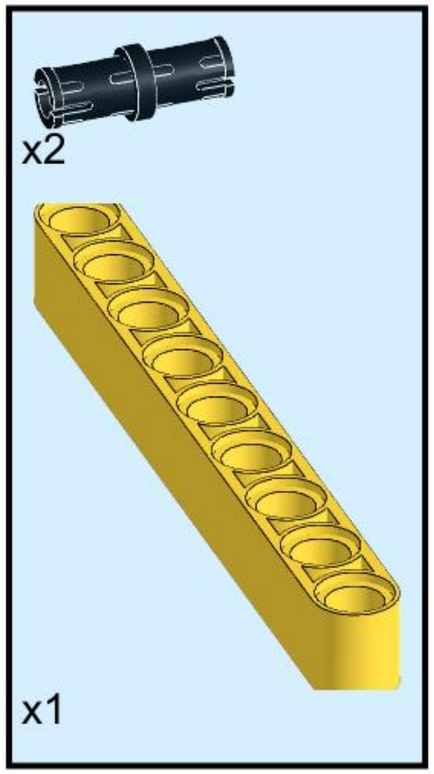

147

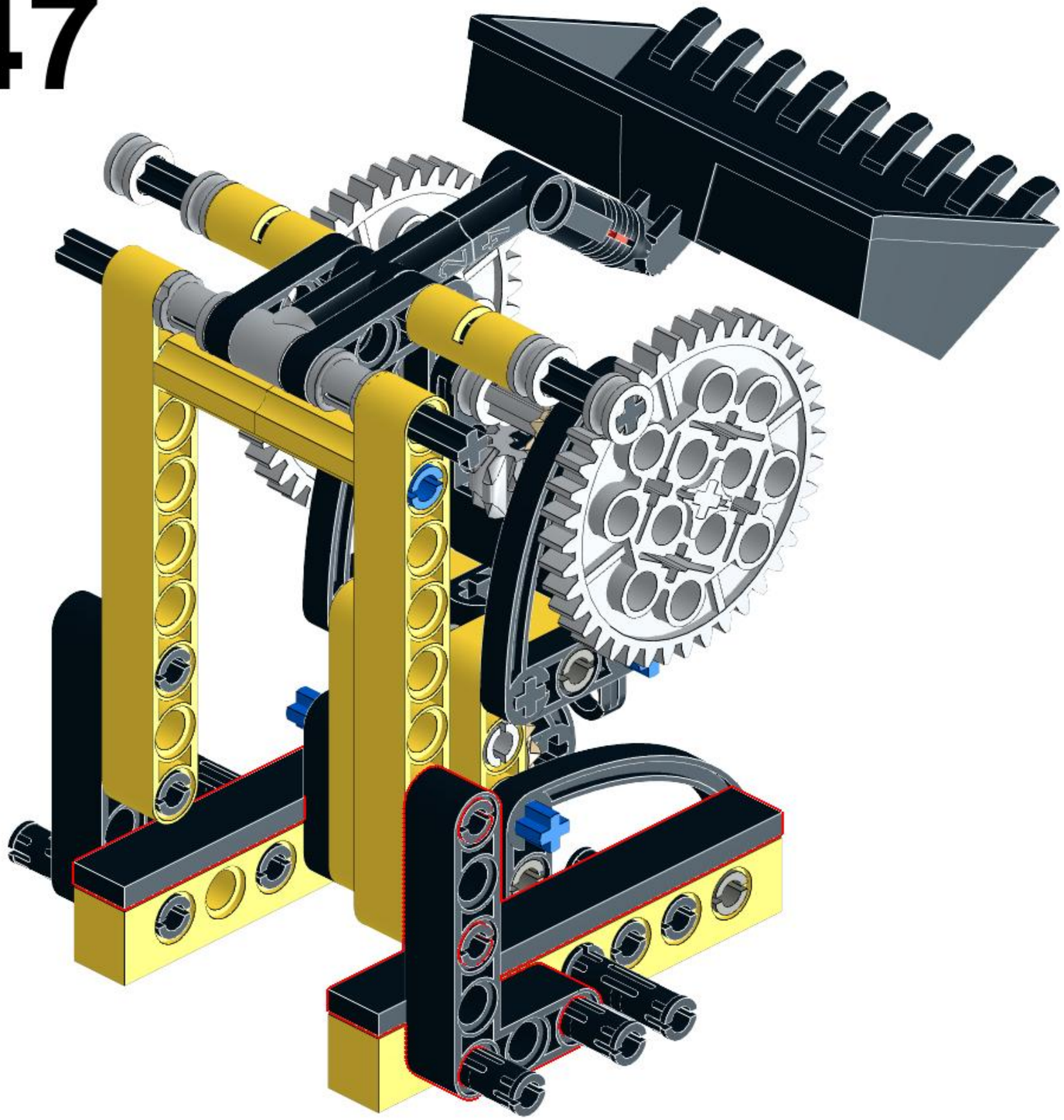

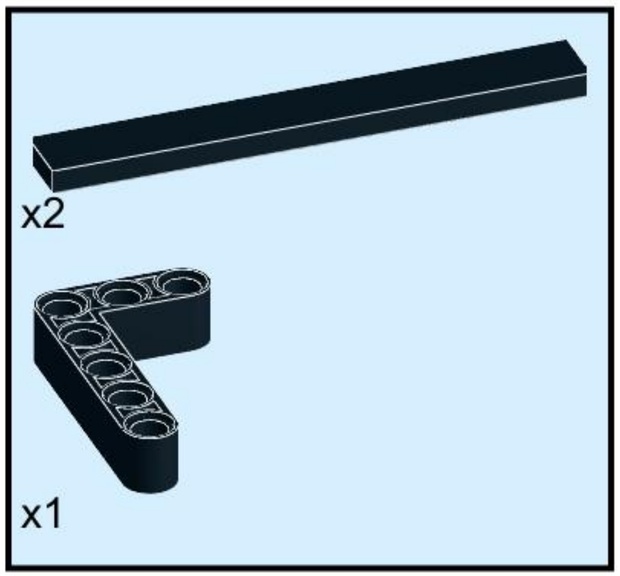

148

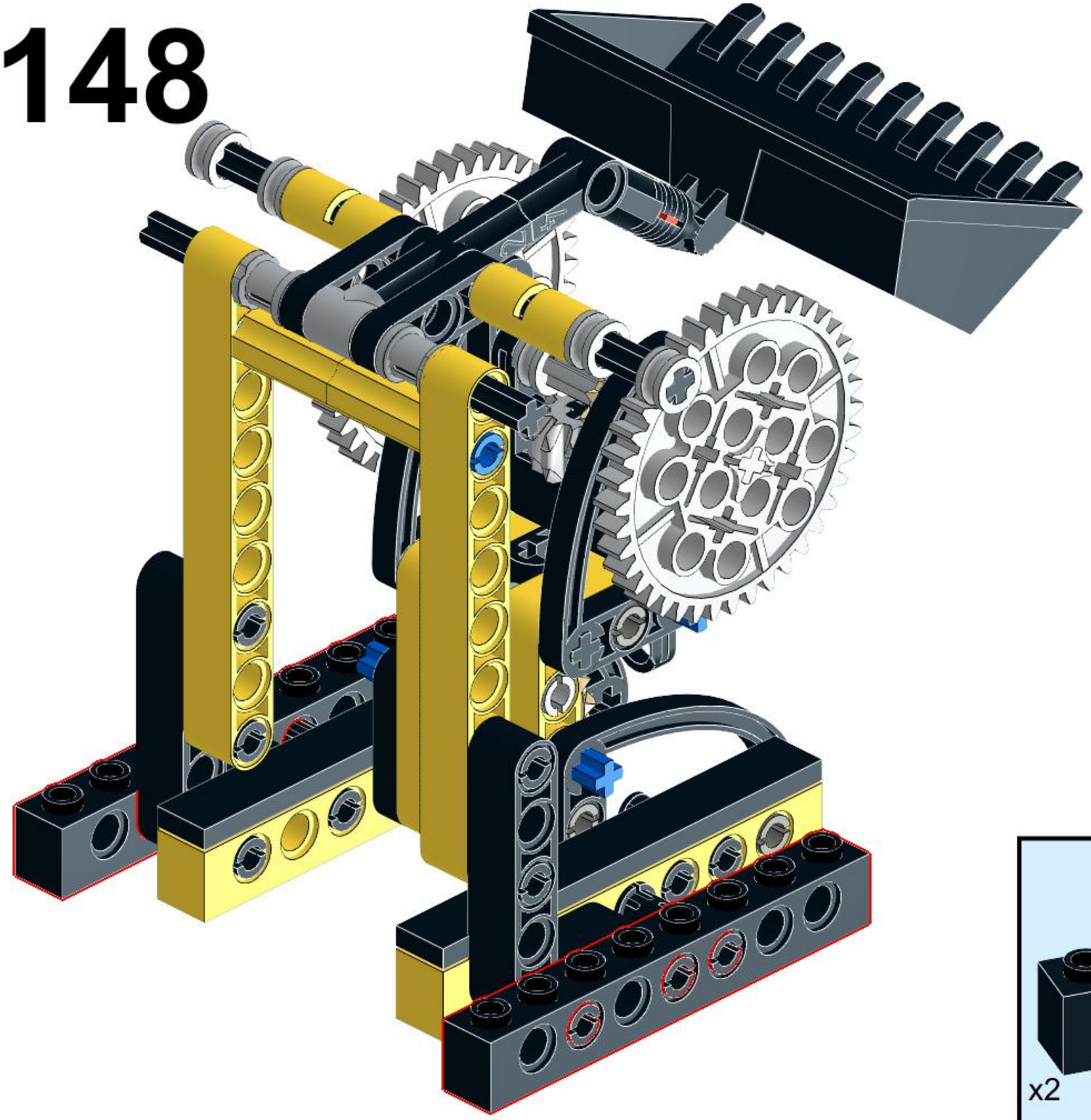

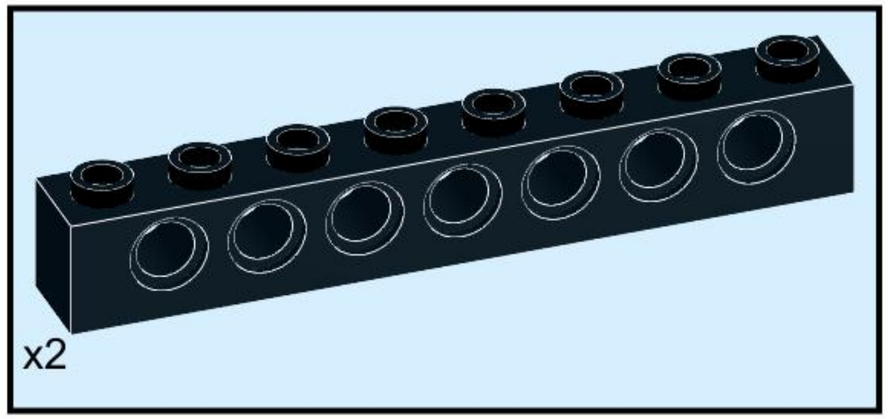

149

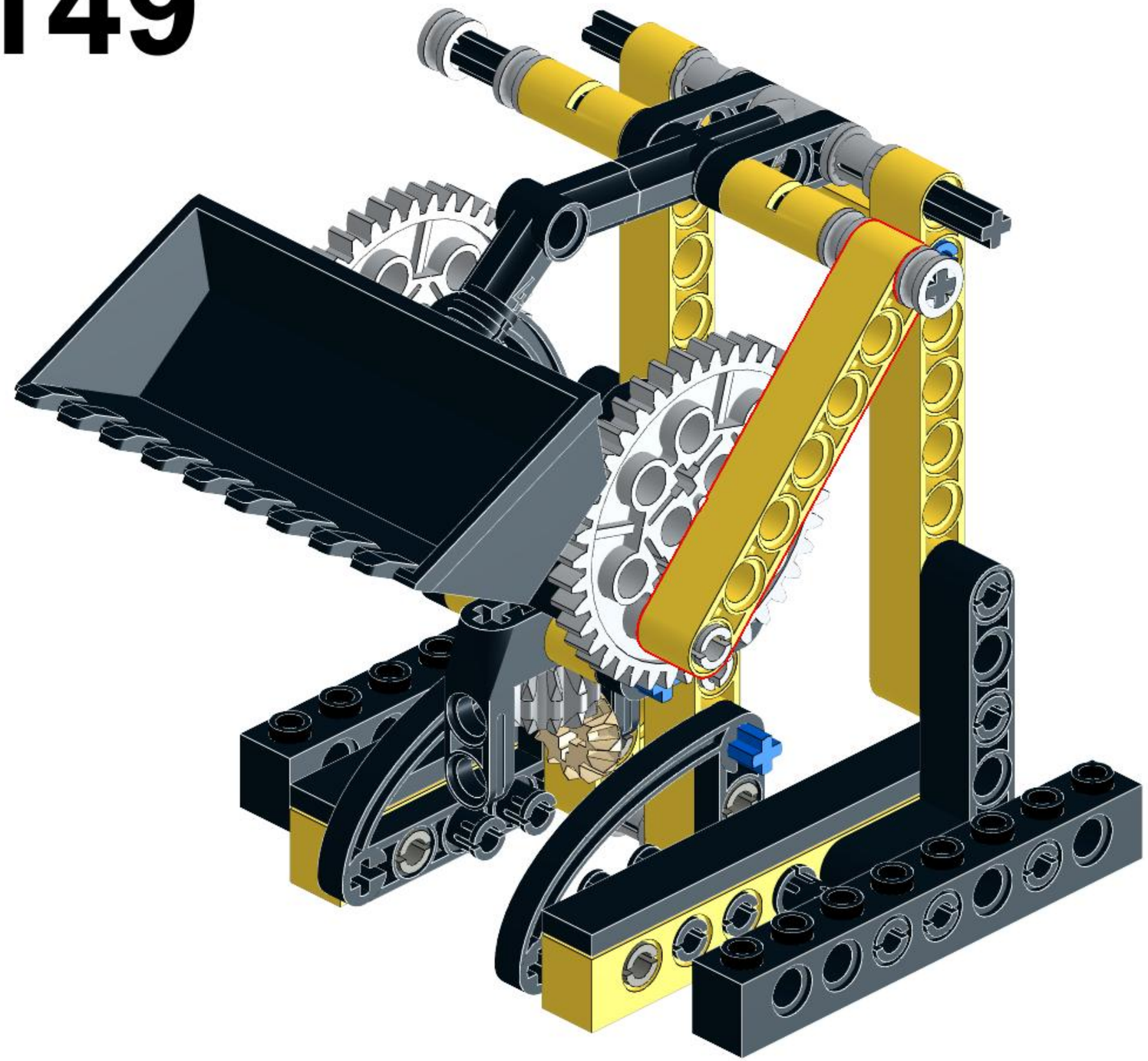

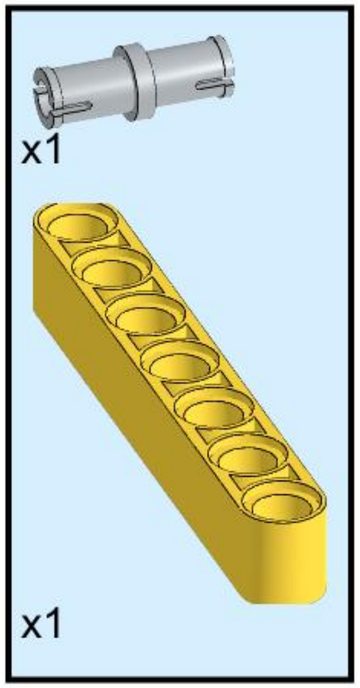

150

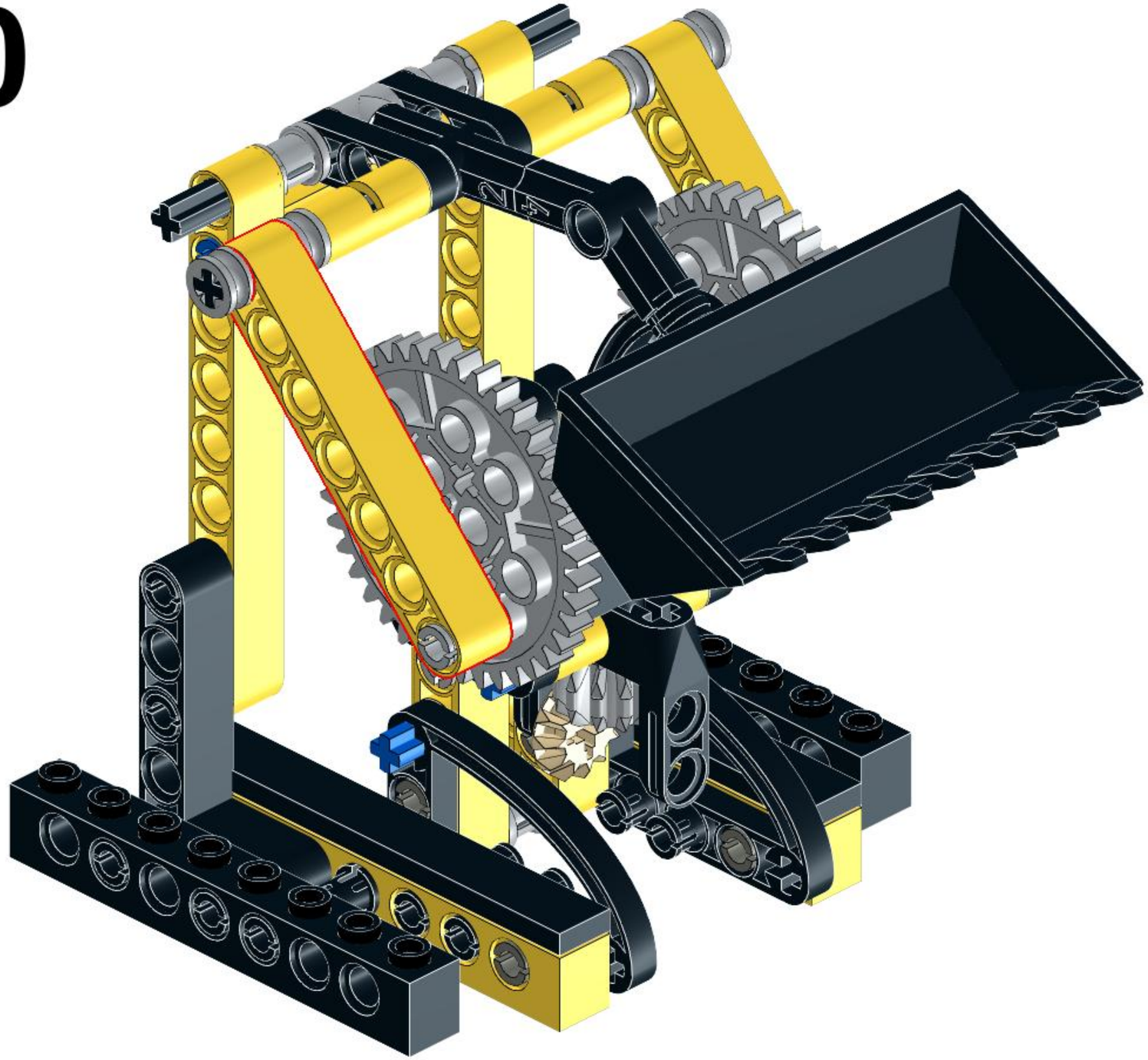

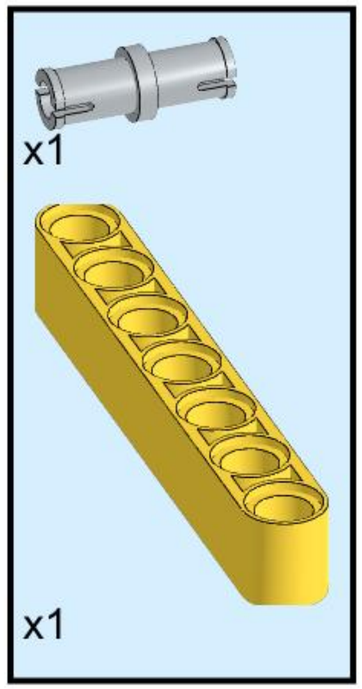

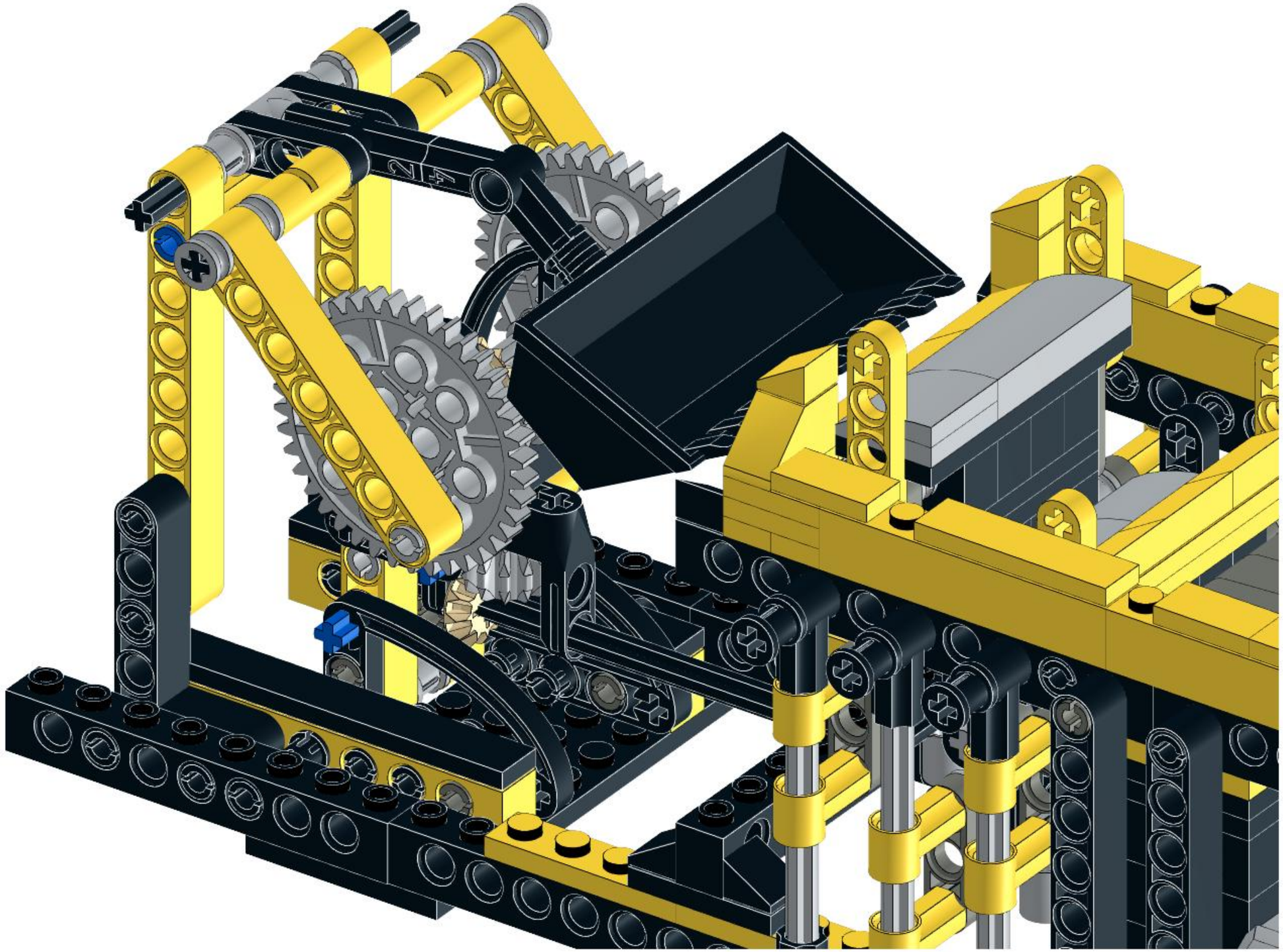

152

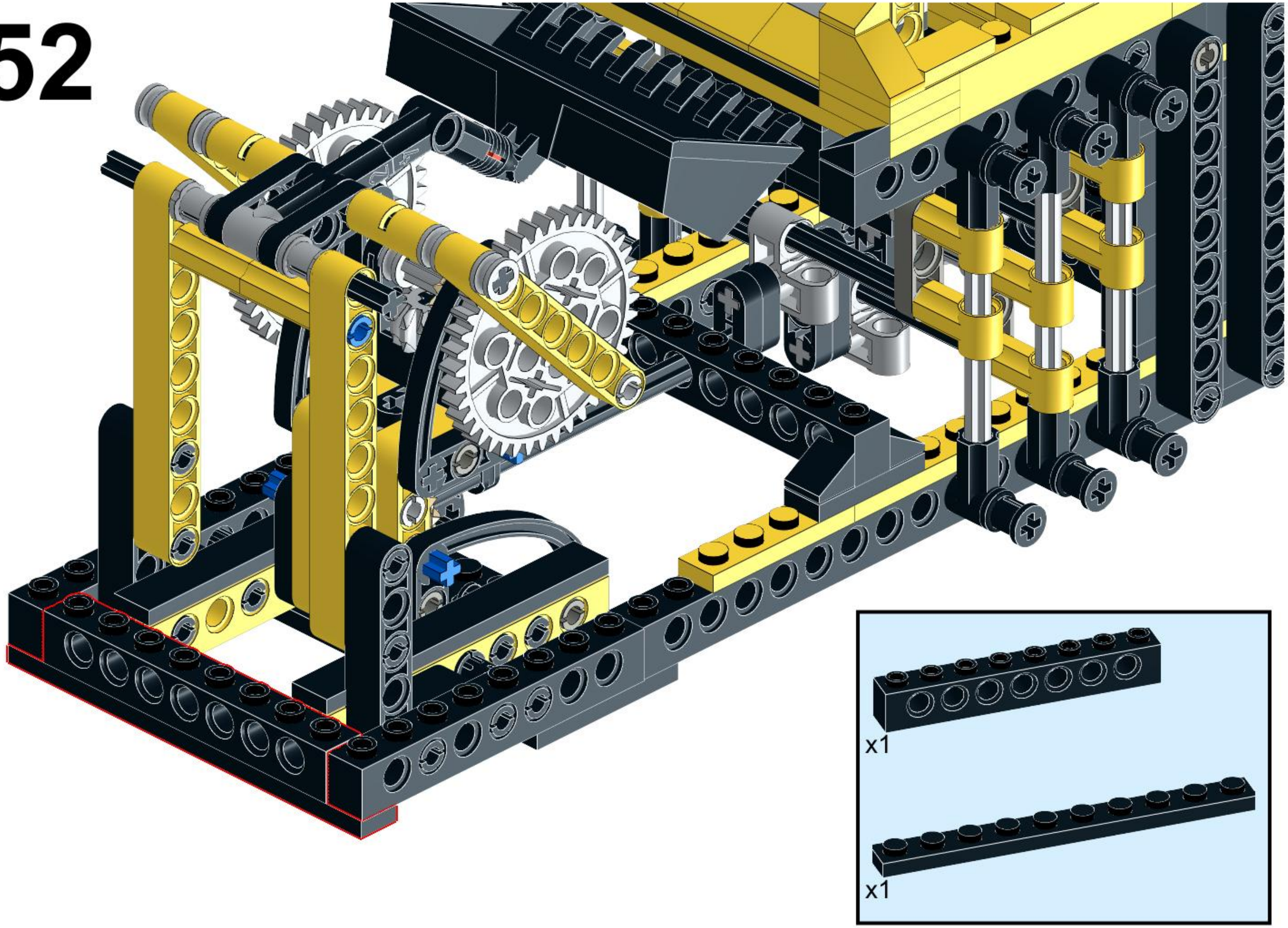

153

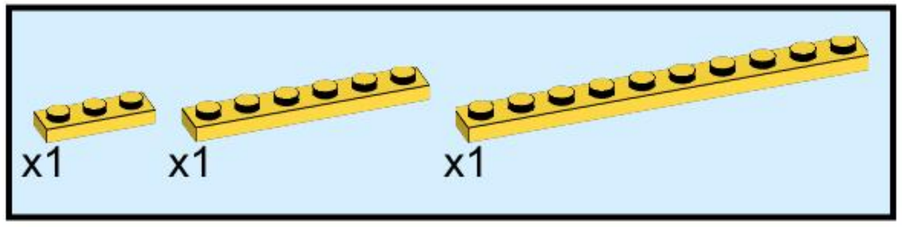

154

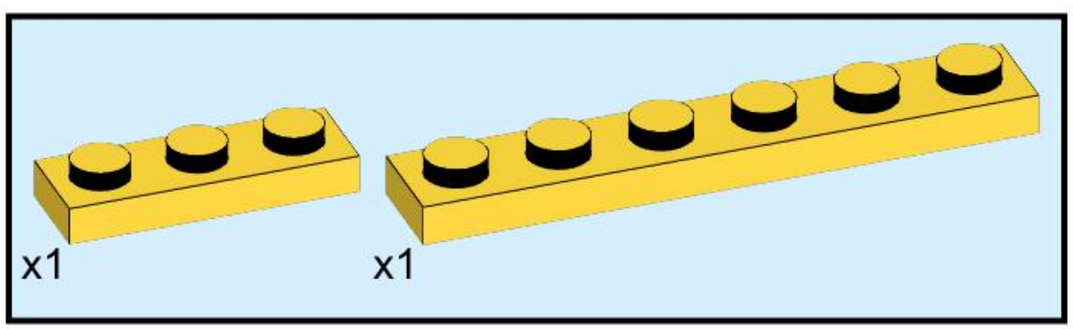

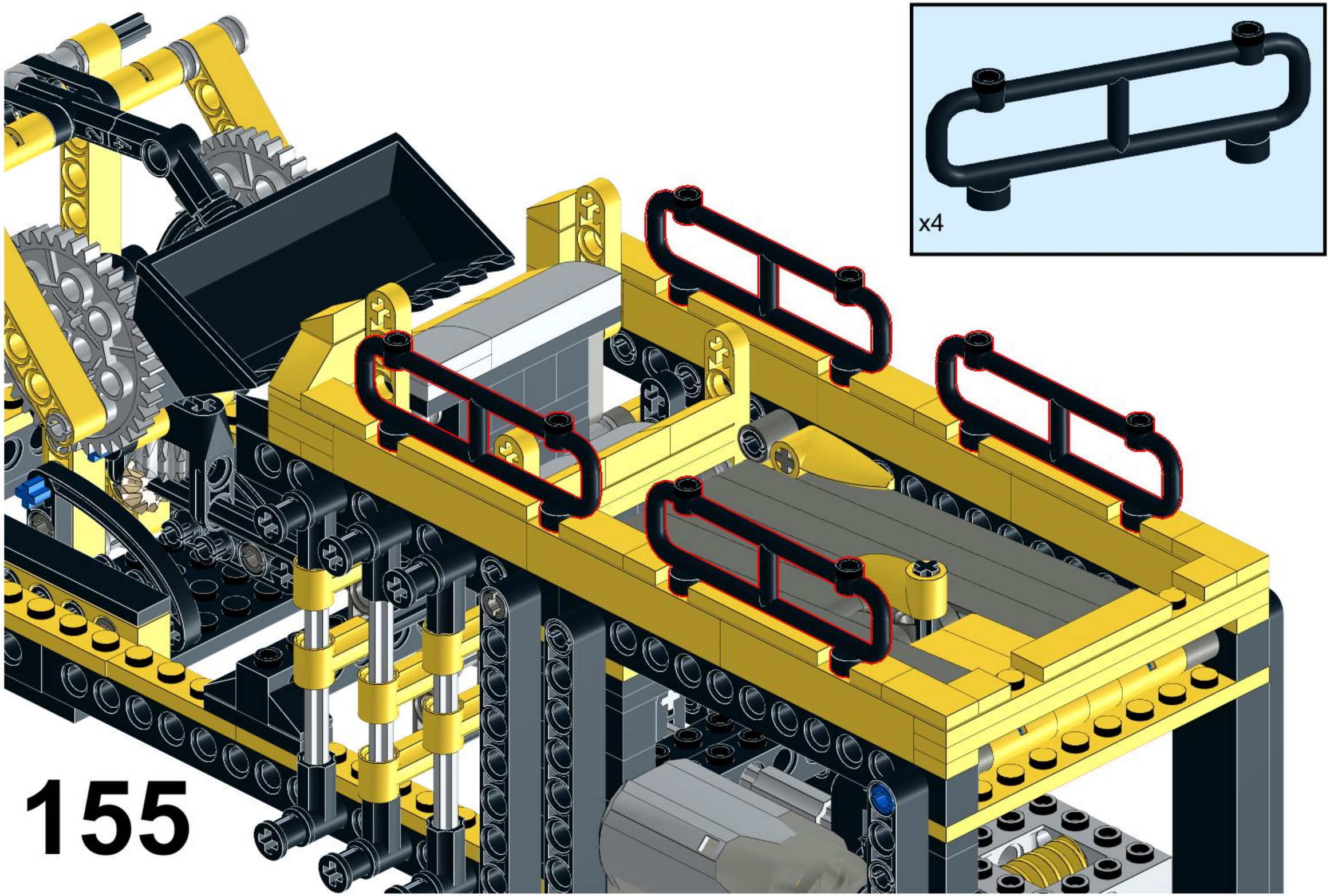
x4
155

x1
3024, 11

x6
54200,
11

x4
6541, 11

x4
3005, 11

x1
30552,
11

x4
41677,
11

x2
3023, 11

x27
4459, 11

x1
2780, 11

x12
32013, 11

x4
32270, 11

x12
32064, 11

x1
3700, 11

x1
3004, 11

x6
6632, 11

x7
6558, 11

x2
3623, 11

x12
32054, 11

x1
32034, 11

x1
32192, 11

x1
3021, 11

x2
2825, 11

x5
3705, 11

x7
3710, 11

x4
87408, 11

x6
3010, 11

x2
3701, 11

x4
3020, 11

x1
64799, 11

x4
32250, 11

x2
32526, 11

x2
3706, 11

x1
3666, 11

x3
3795, 11

x1
2454, 11

x4
2486, 11

x1
3707, 11

x2
4162, 11

x5
3702, 11

x6
40490, 11

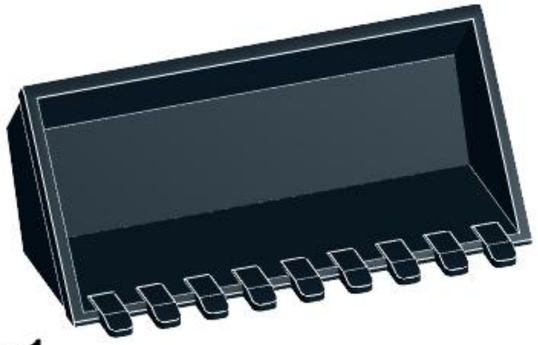

x1
47508, 11

x1
4477, 11

x7
3737, 11

x5
2730, 11

x1
3832, 11

x1
3030, 11

x1
3708, 11

x4
3895, 11

x2
3703, 11

x2
18654,
85

x7
32002, 85

x8
41677,
85

x1
6536,
85

x8
6632, 85

x2
11214, 85

x2
32524, 85

x6
41239, 85

x11
4265c, 86

x10
3713, 86

x2
3673, 86

x2
3023, 86

x2
3794, 86

x1
6538c, 86

x1
22961, 86

x2
32270, 86

x3
44809, 86

x2
3022, 86

x2
15068, 86

x3
4519, 86

x1
87082, 86

x1
62520c01,
86

x2
88930, 86

x2
32073, 86

x2
32324, 86

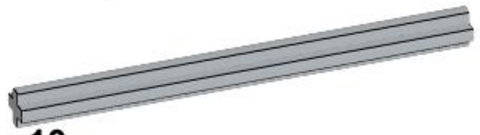
x10
44294, 86

x1
58120c01, 86

x2
3649, 86

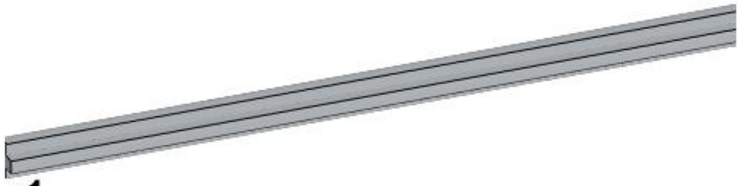
x1
23948, 86

x6
32062, 5

x4
6589, 2

x1
4265c,
3

x6
3070b, 3

x4
3024, 3

x2
54200, 3

x6
3069b, 3

x2
3023, 3

x12
32013, 3

x6
85984, 3

x4
62462, 3

x2
6538c, 3

x2
3040, 3

x1
32905, 3

x4
2420, 3

x3
x346, 3

x2
3623, 3

x4
32449, 3

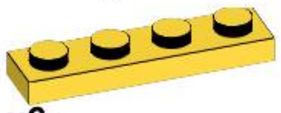

x6
3710, 3

x5
2431, 3

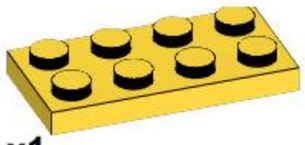

x1
3020, 3

x2
32316, 3

x2
32526, 3

x4
3666, 3

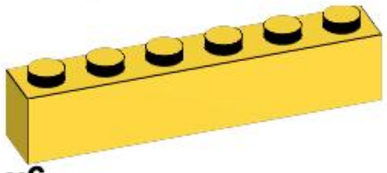

x6
3009, 3

x2
32524, 3

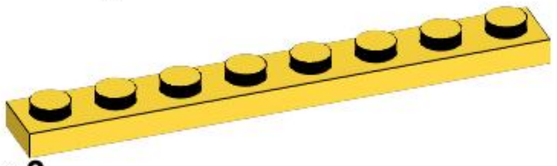

x3
3460, 3

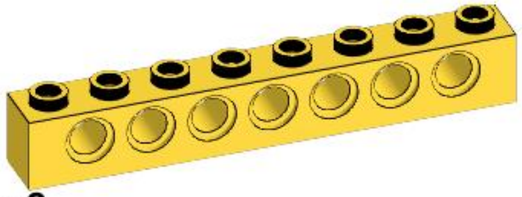

x2
3702, 3

x2
40490, 3

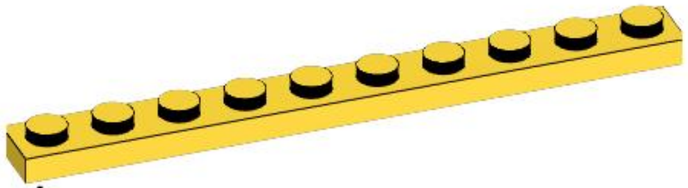

x4
4477, 3

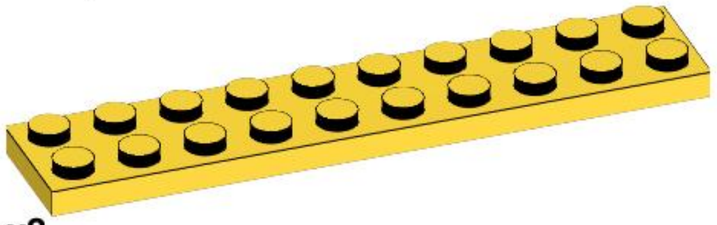

x2
3832, 3

x2
43093, 7

x6
3749, 7

x13
6558, 7

Module Revision Notes

Version 1.0 - Initial Release

Version 1.1 - Replaced poorly chosen 1x6 Yellow Bricks without bottom tubes (no longer available) with regular 1x6 Yellow Bricks (accidental part selection during build)