TUMBLE DRYER

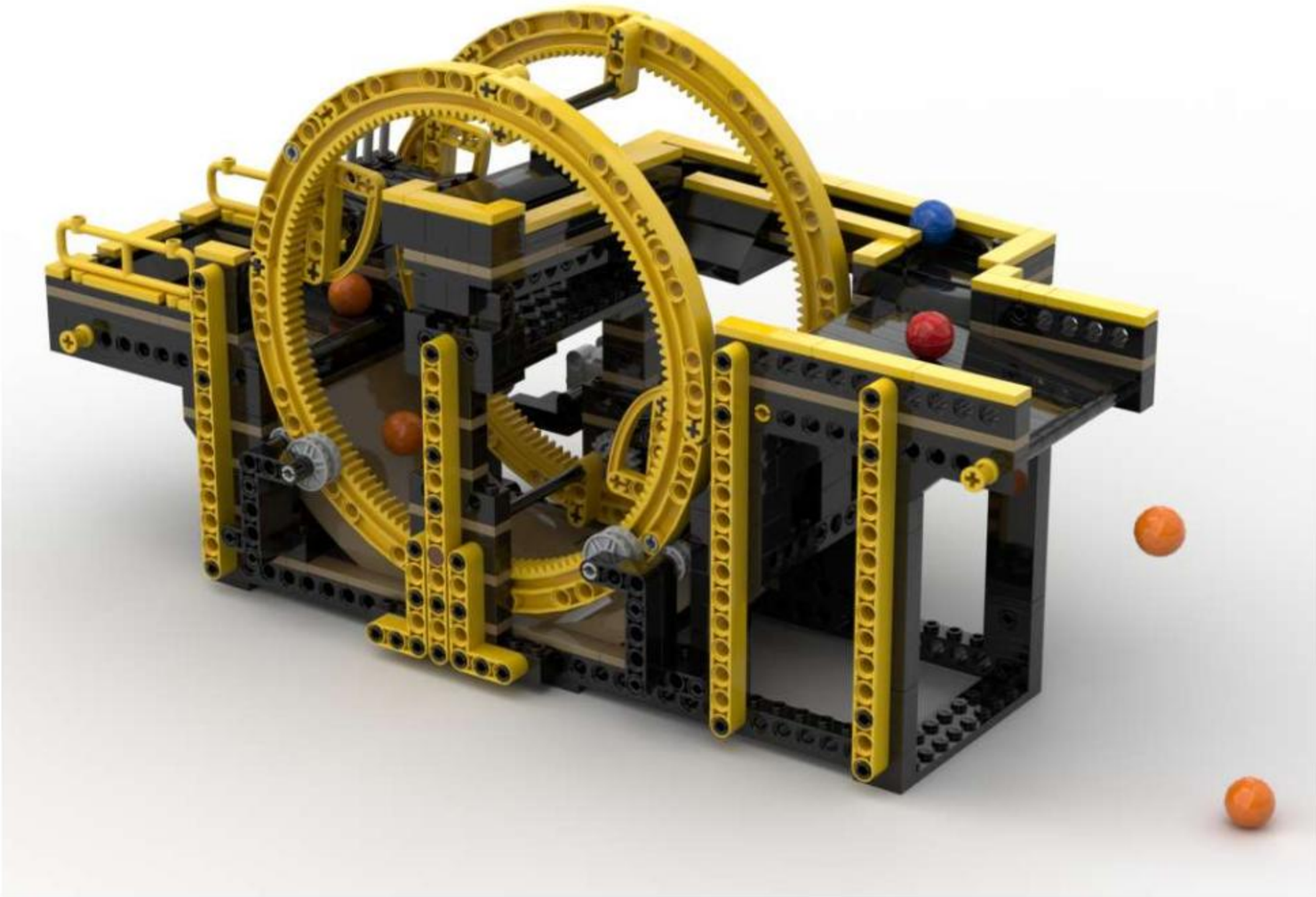

Designed by
Ryk Field
2018

REF04

Ver 1.0

The base of the Tumble Dryer is built from two large curved sections, commonly referred to as "Skateboard Ramps" which were released in a variety of sport-themed sets from 2002 through 2004.
These instructions are made with Dark Tan ramps, and matching Dark Tan parts throughout. Pictures of the module using each alternate colour is shown on the following page. Modern grey parts are used for highlights in the two grey models.

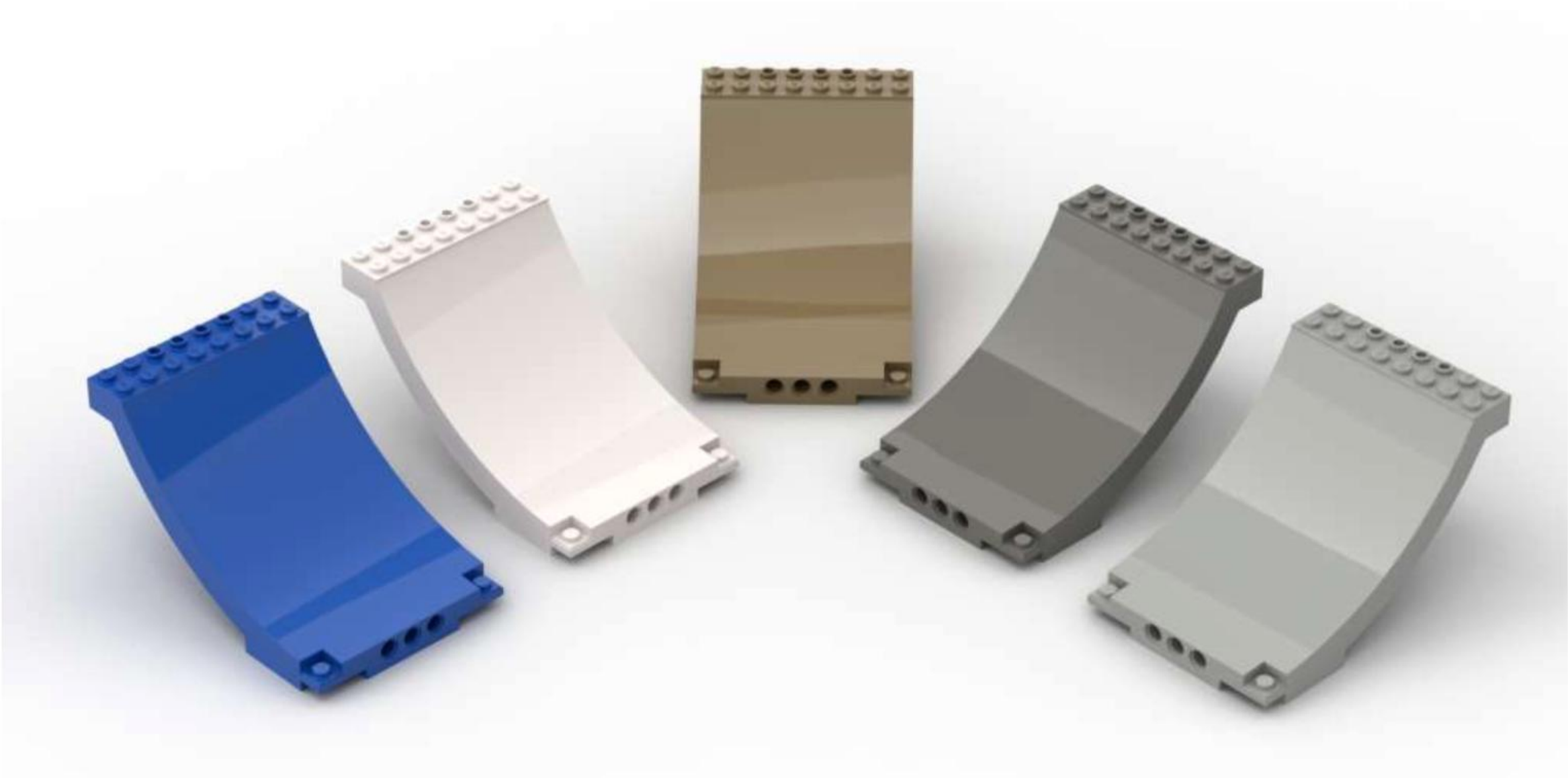

White Ramp

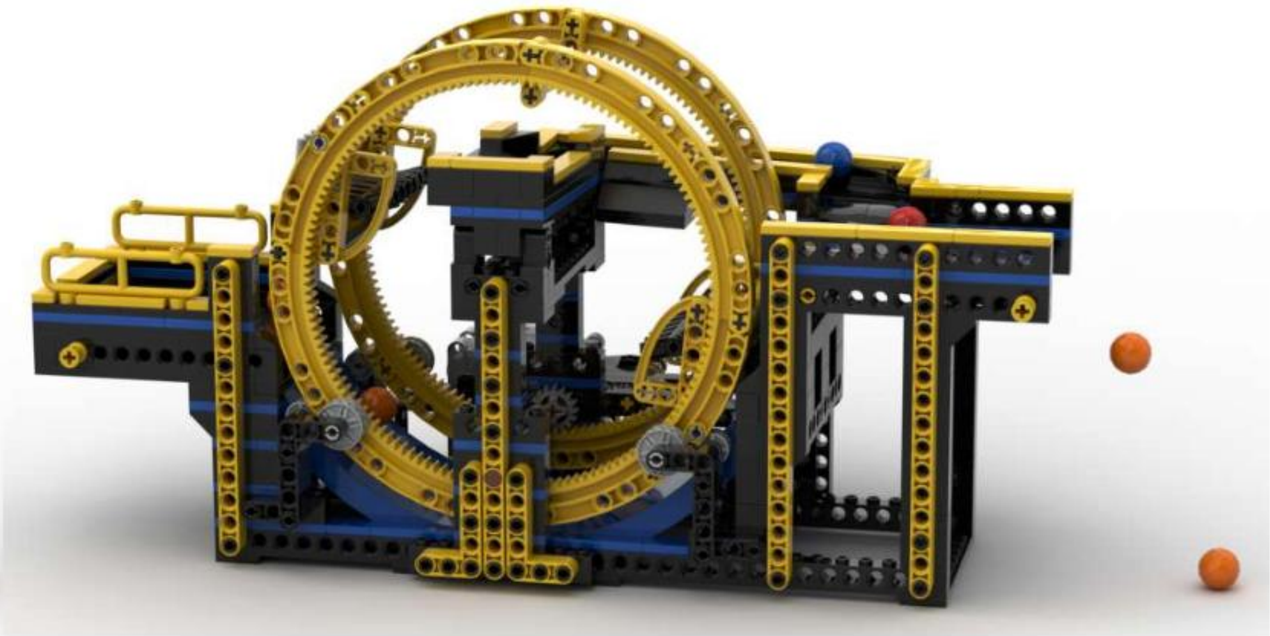

Blue Ramp

Light Grey Ramp

Dark Grey Ramp

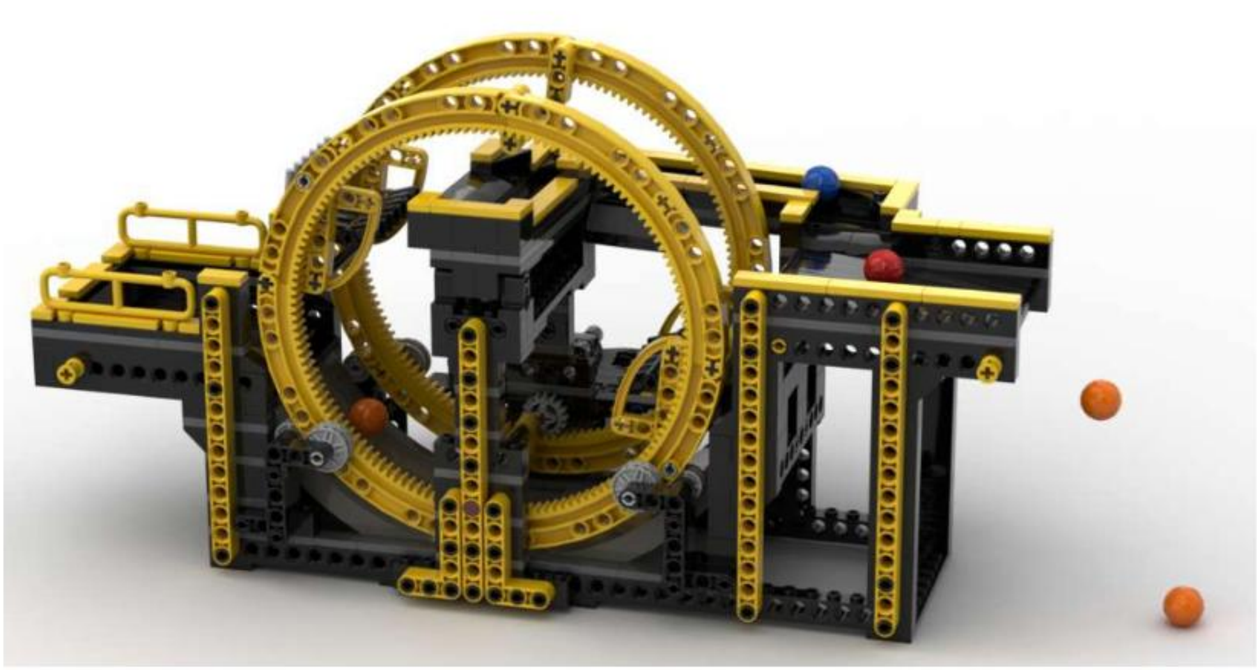

1

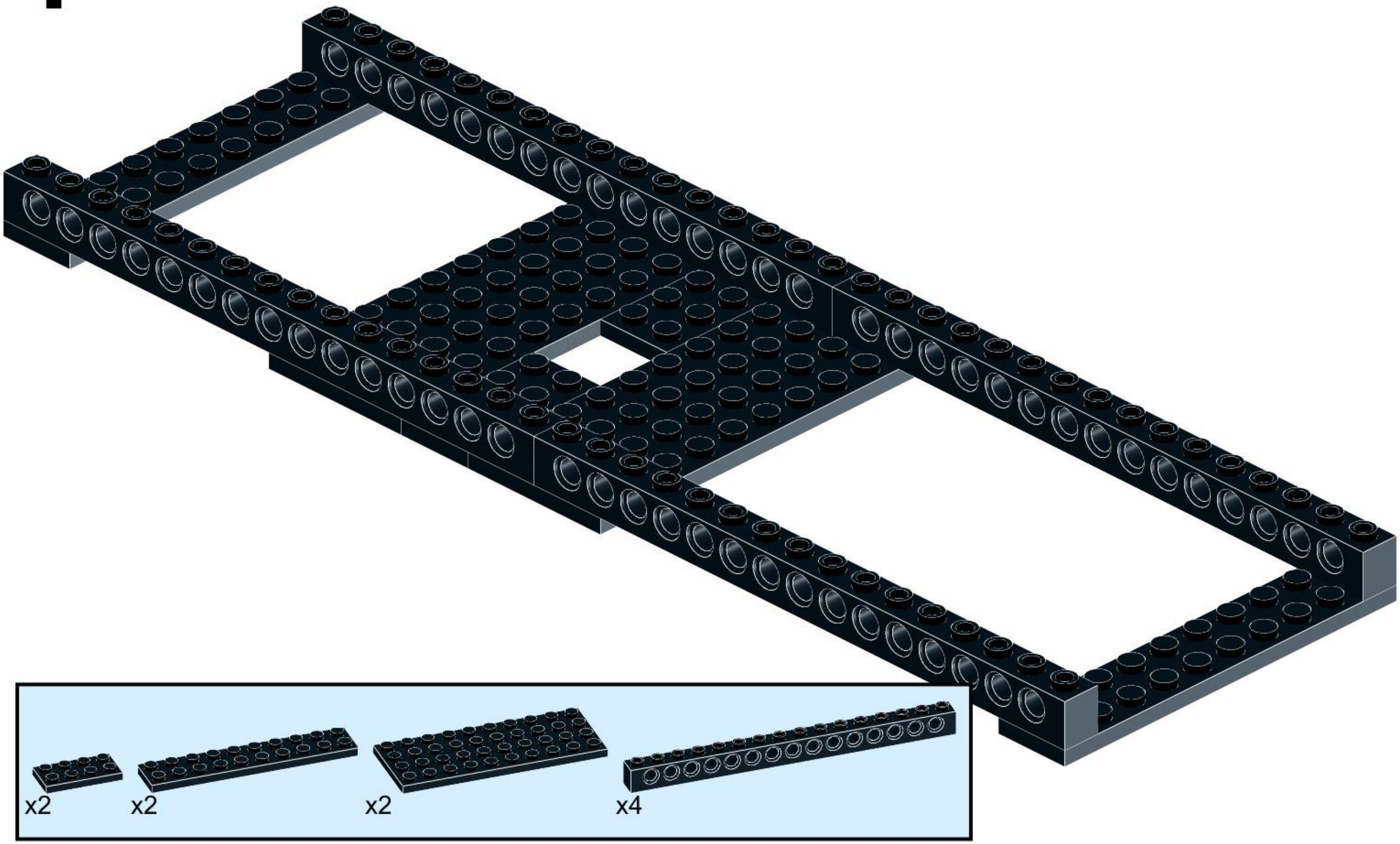

2

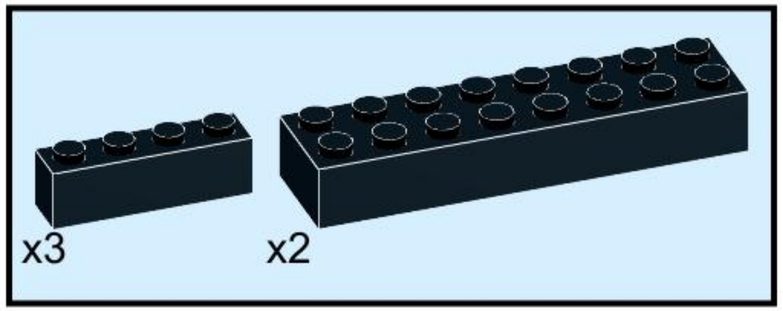

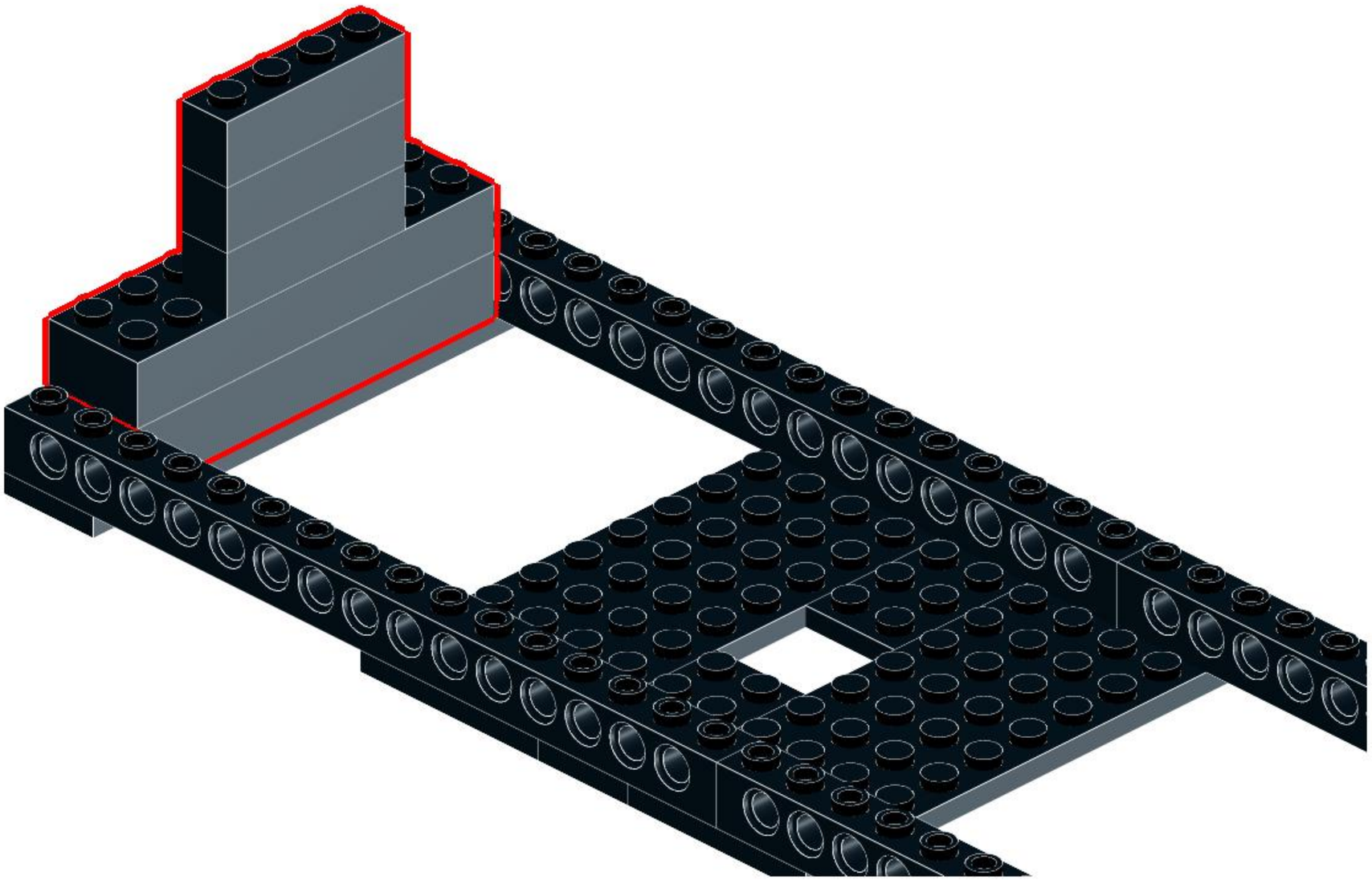

3

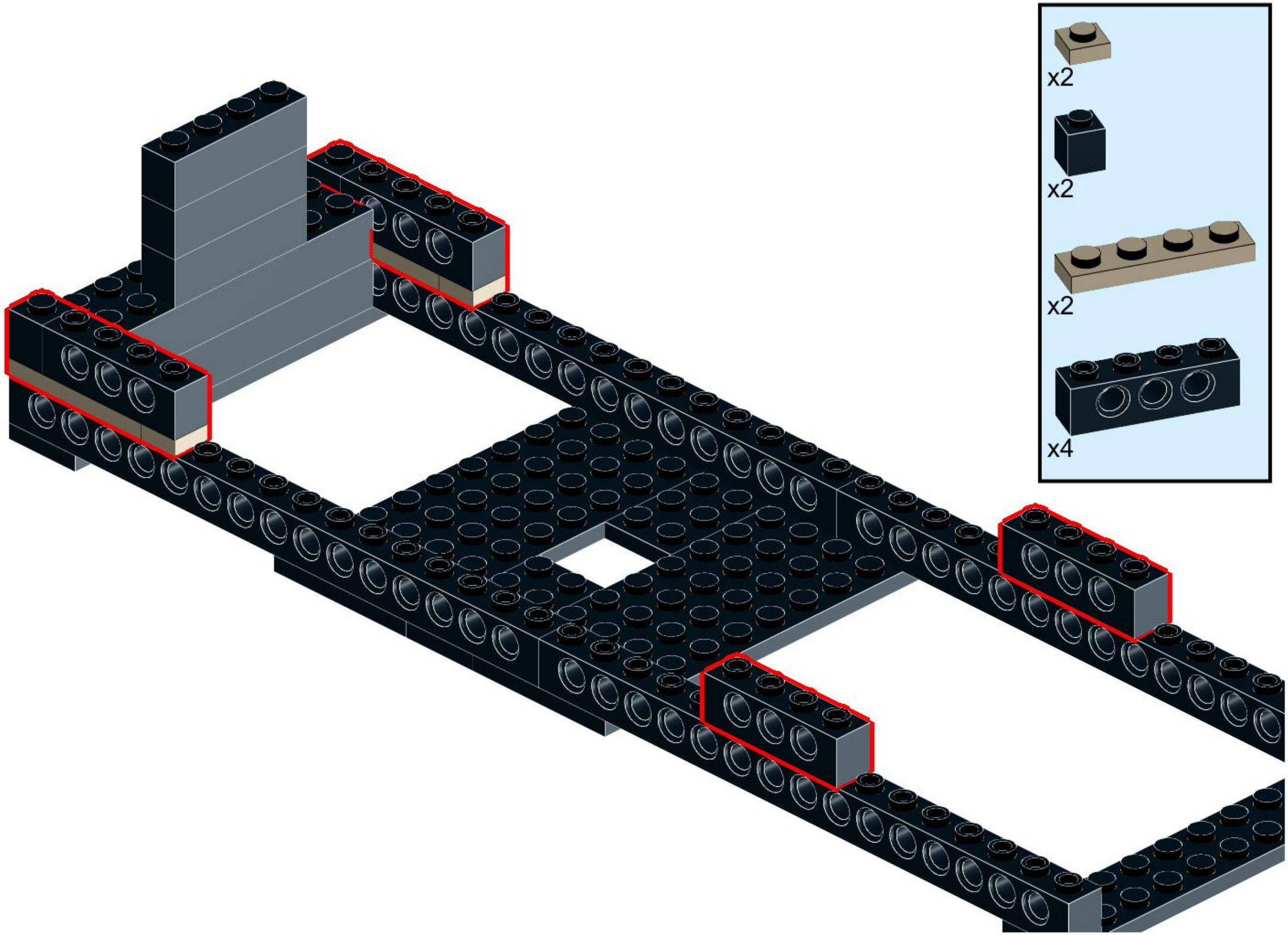

4

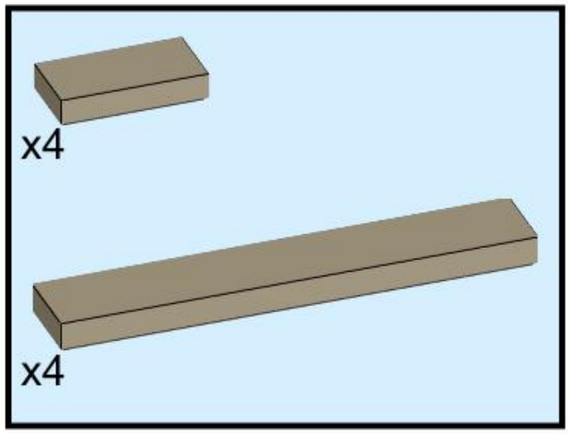

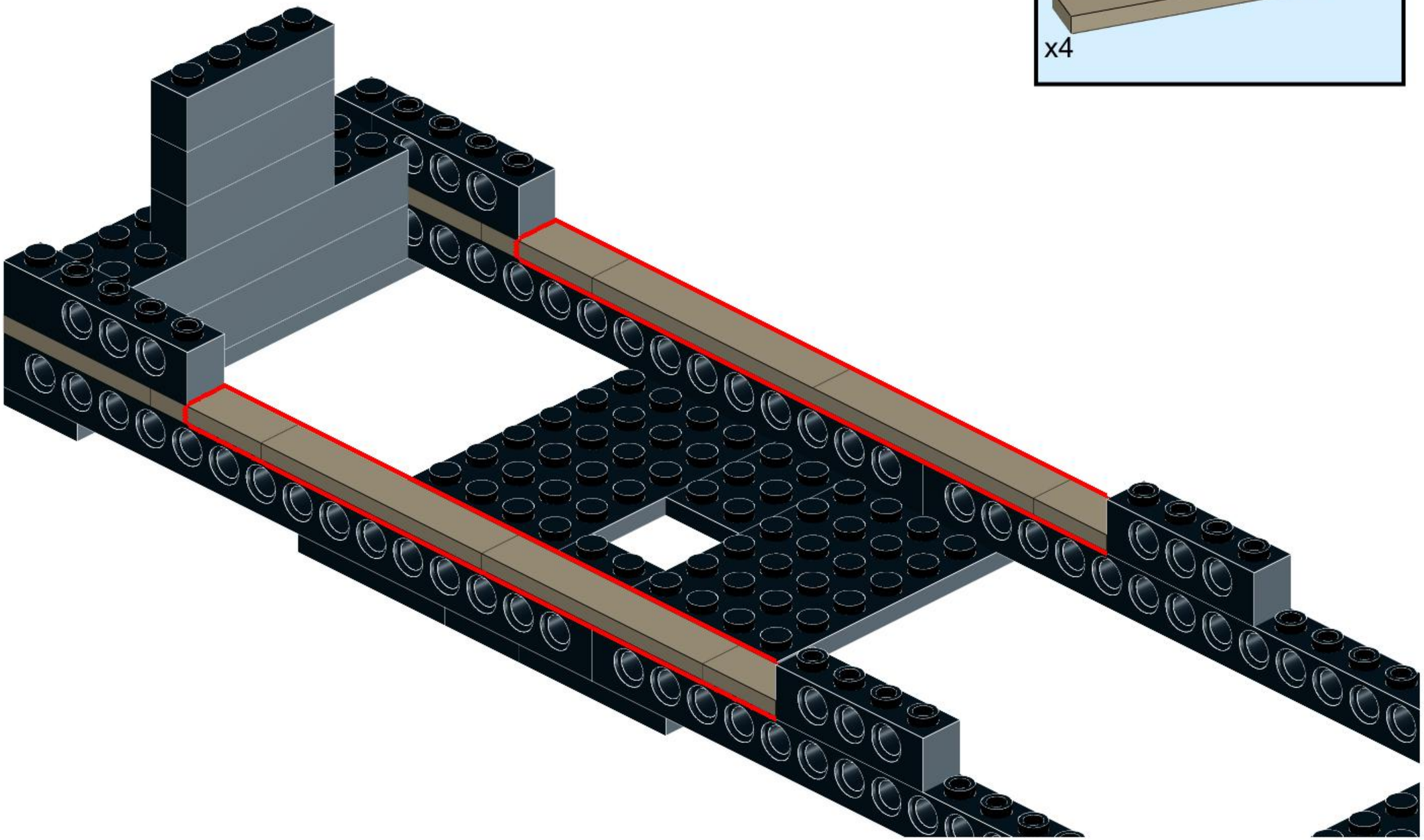

5

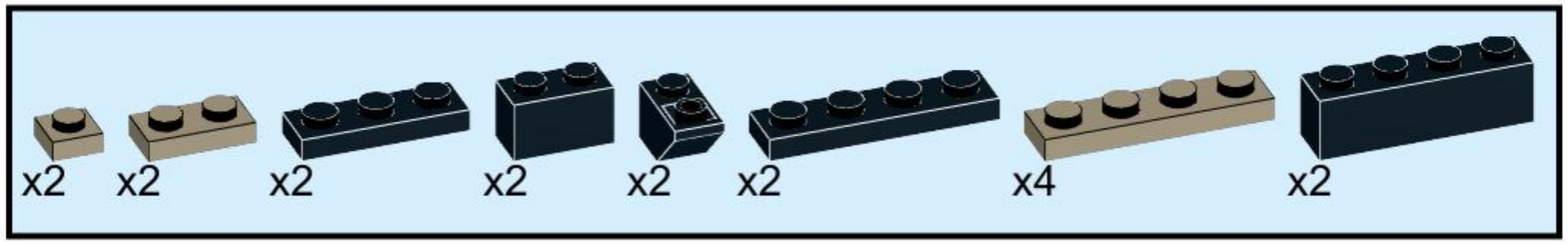

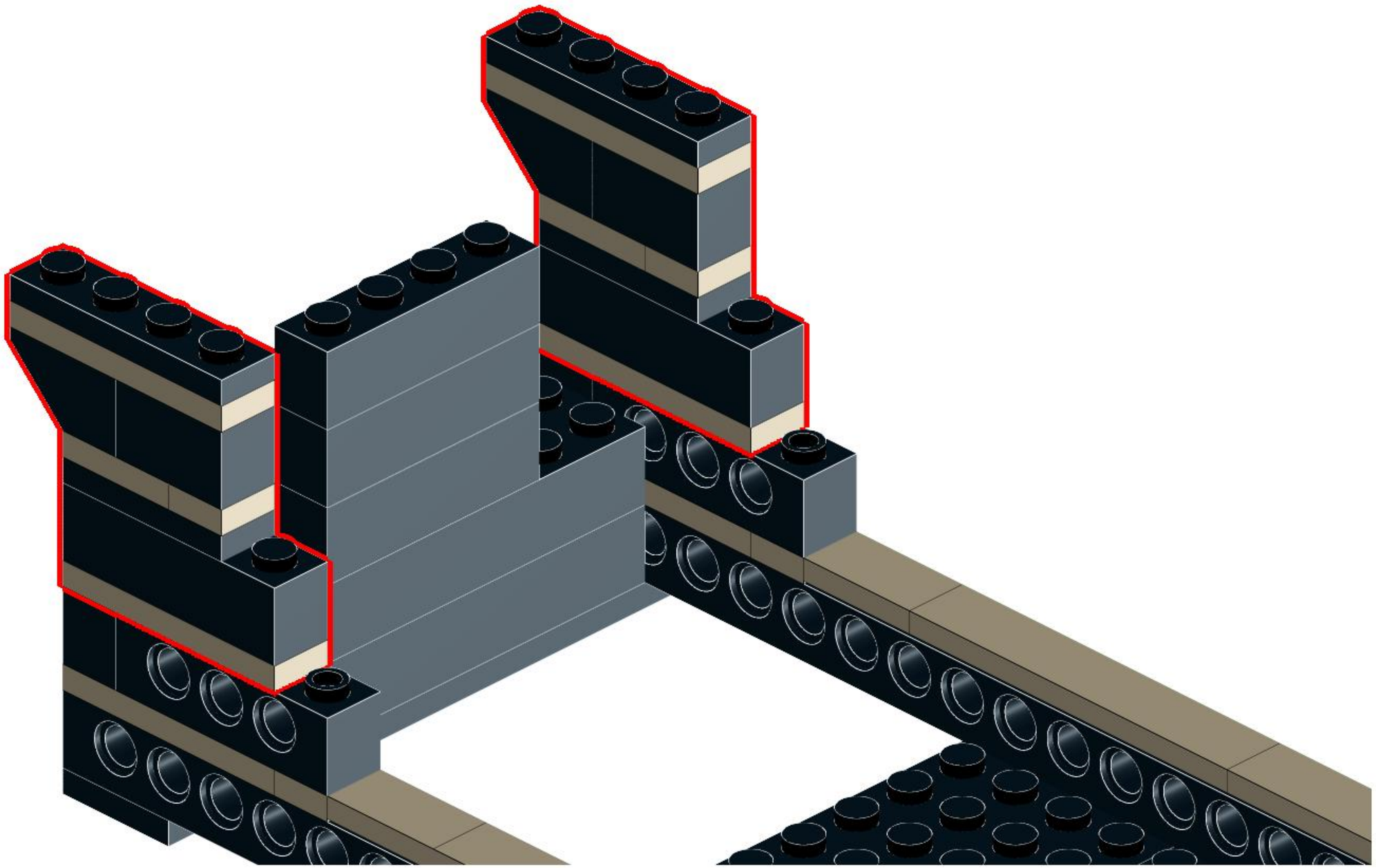

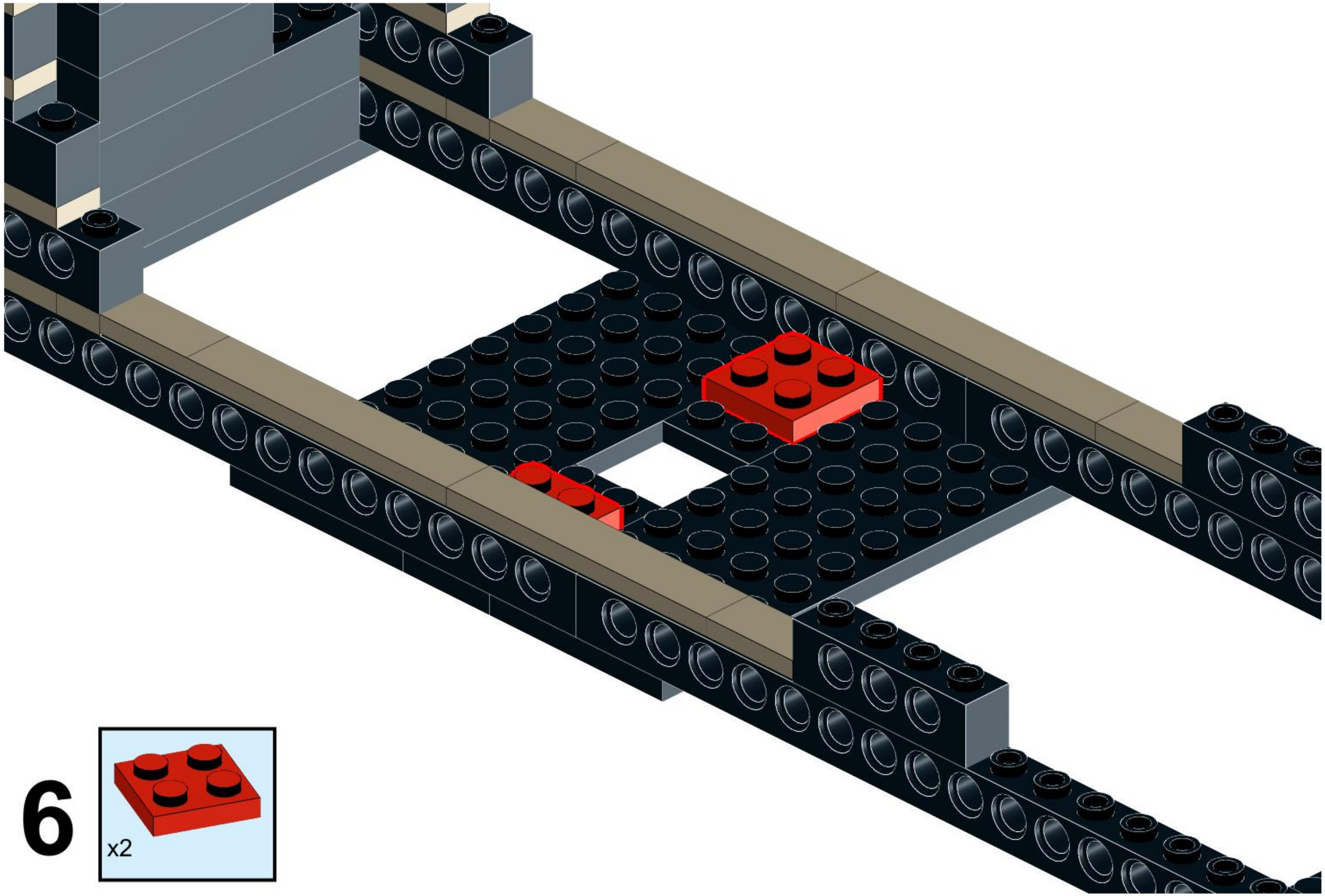

6

7

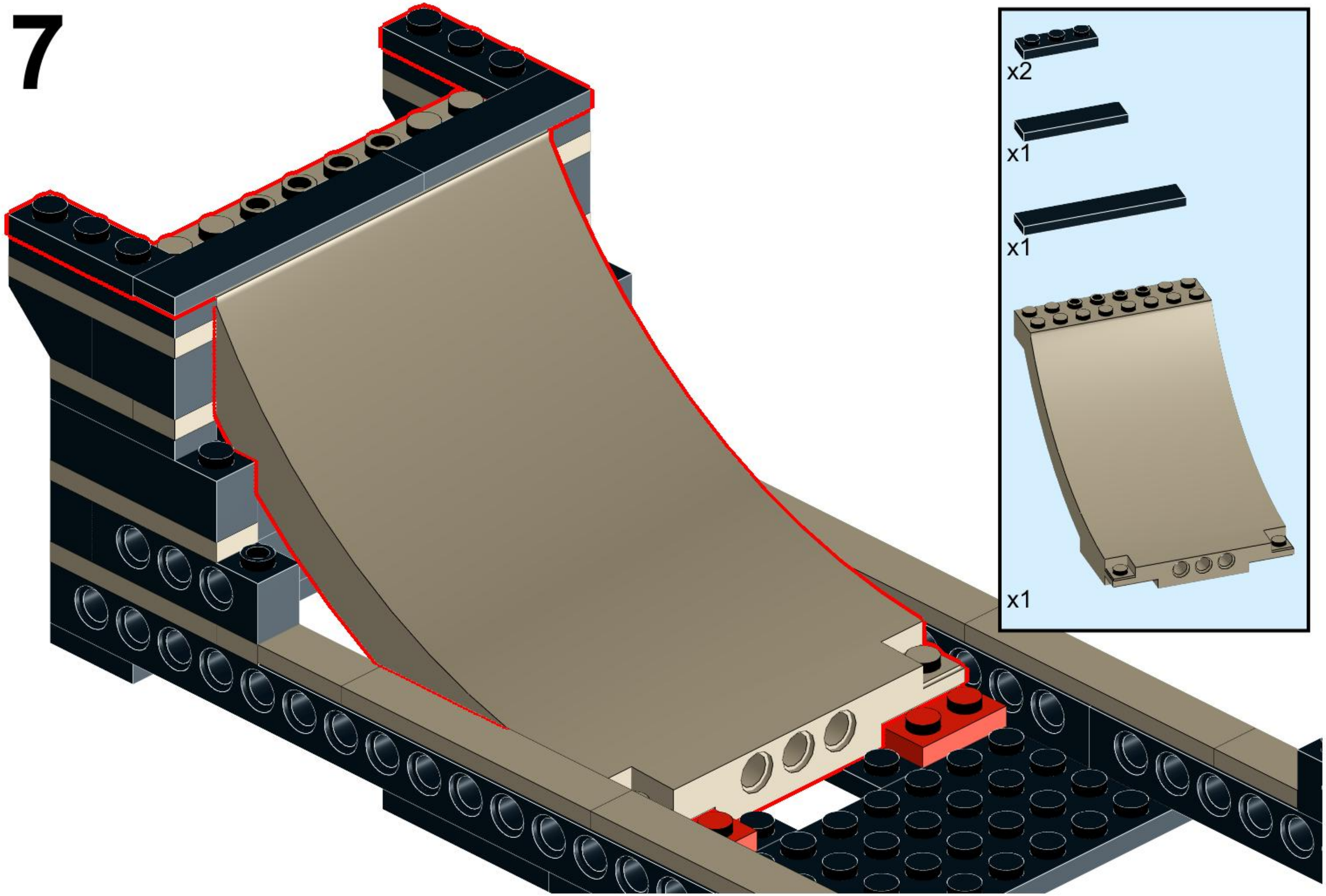

8

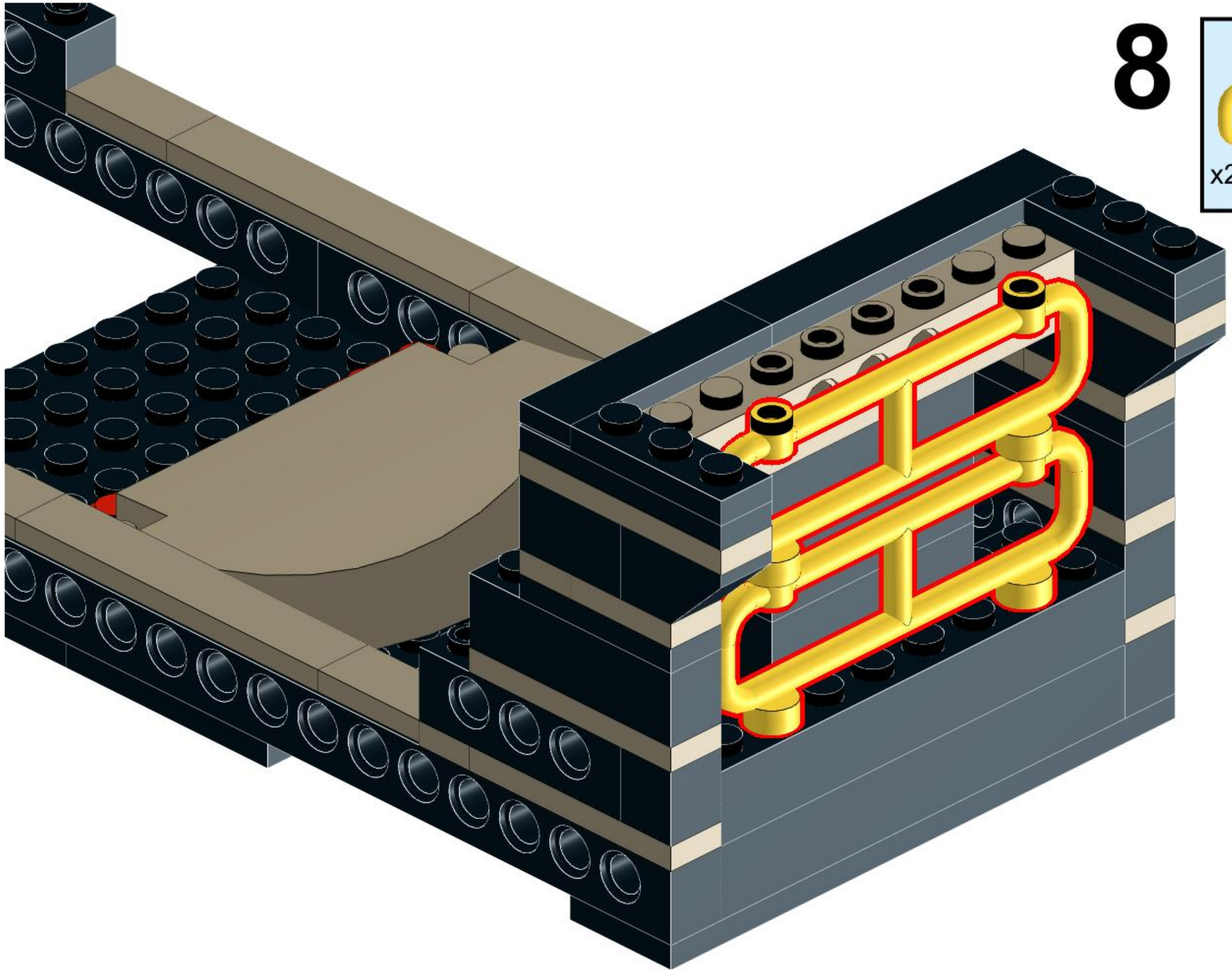

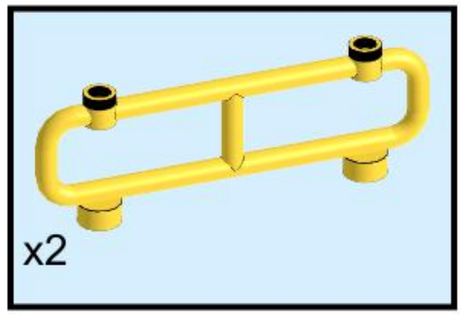

9

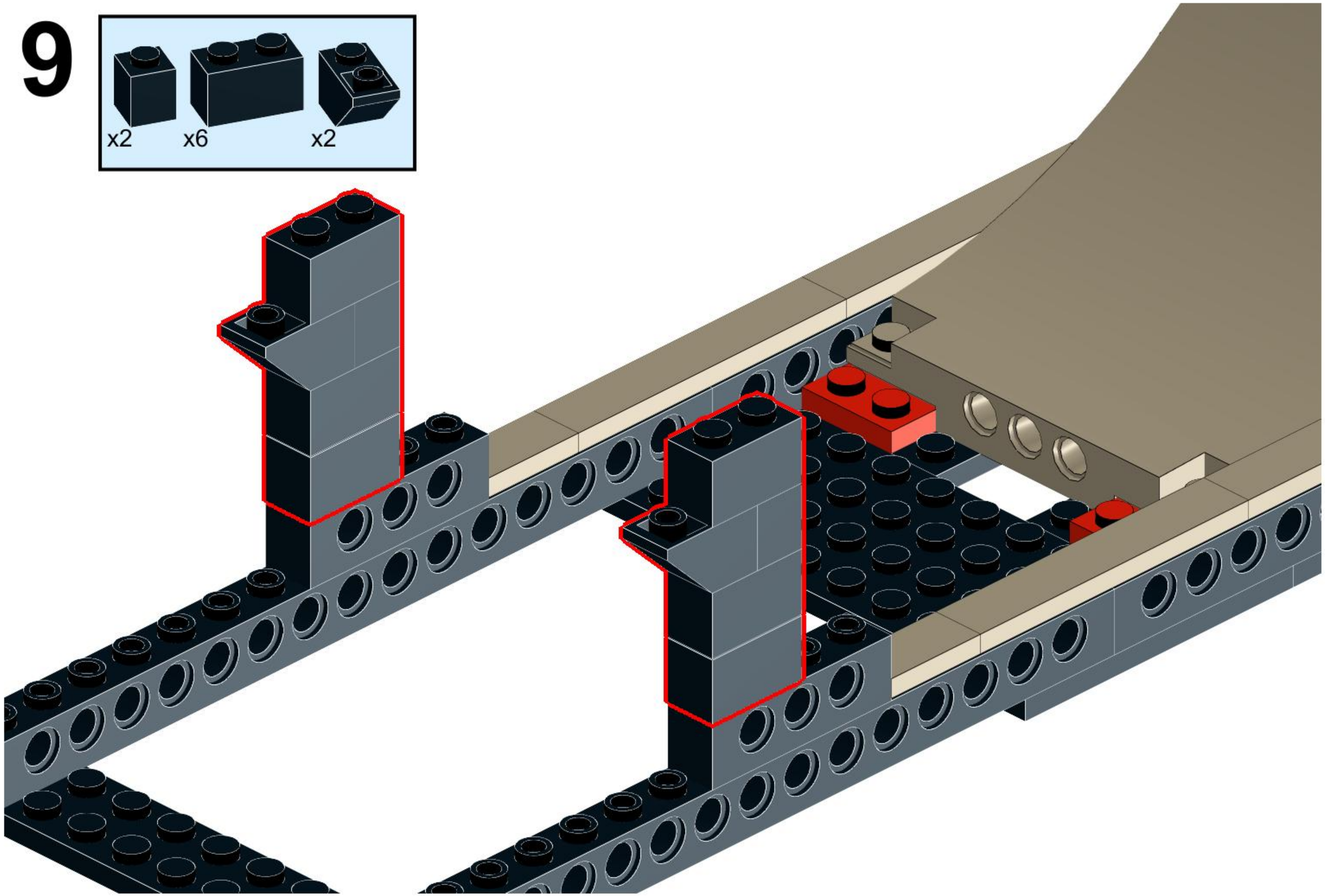

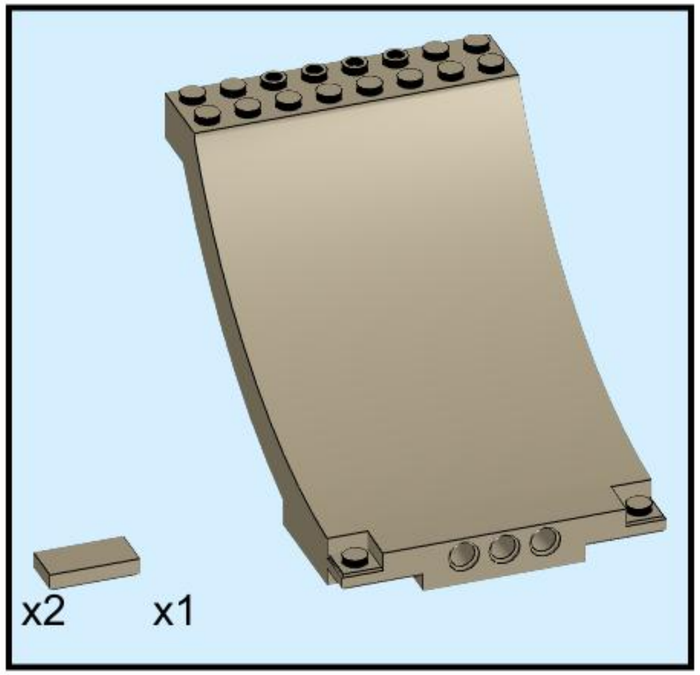

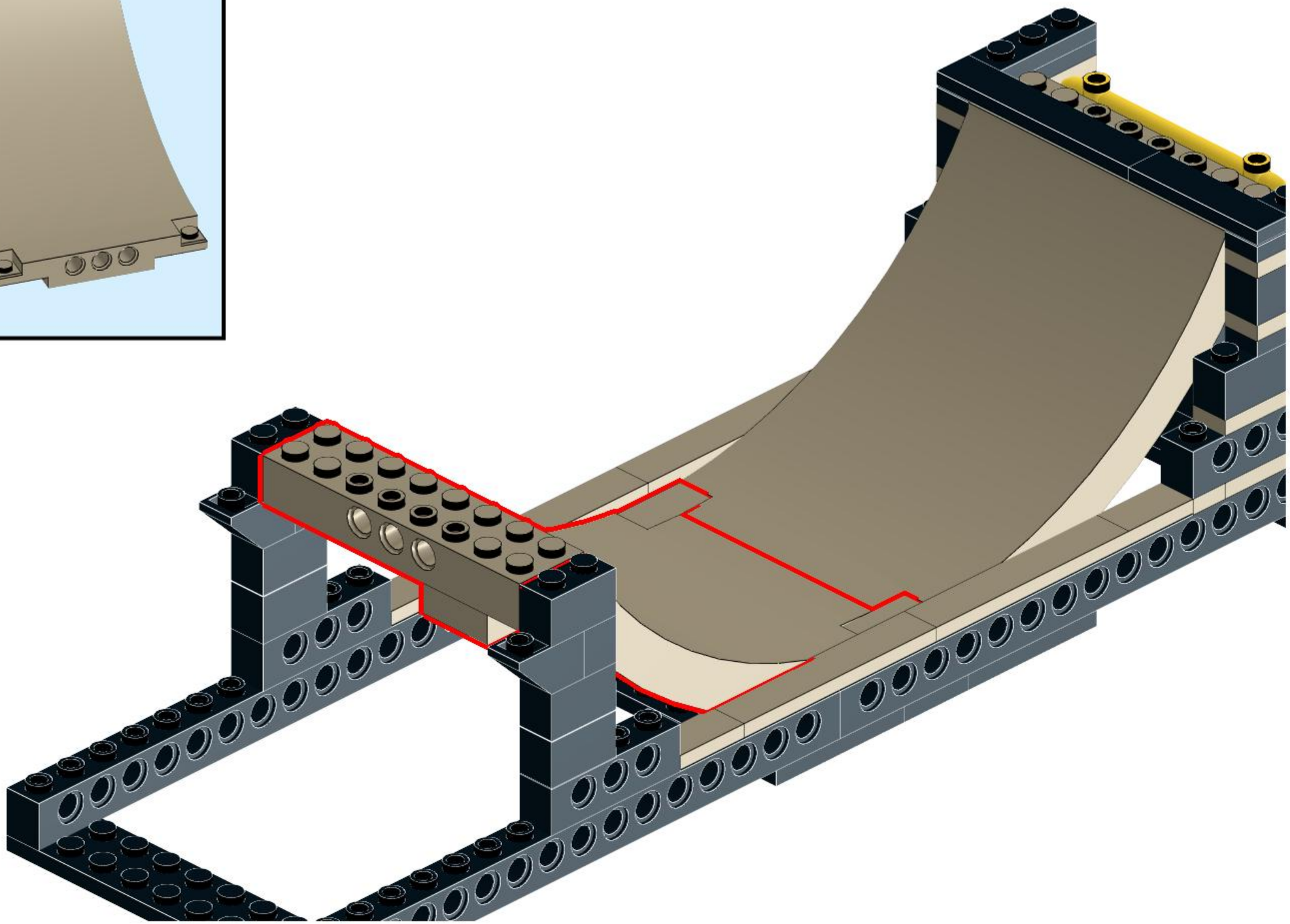

10

11

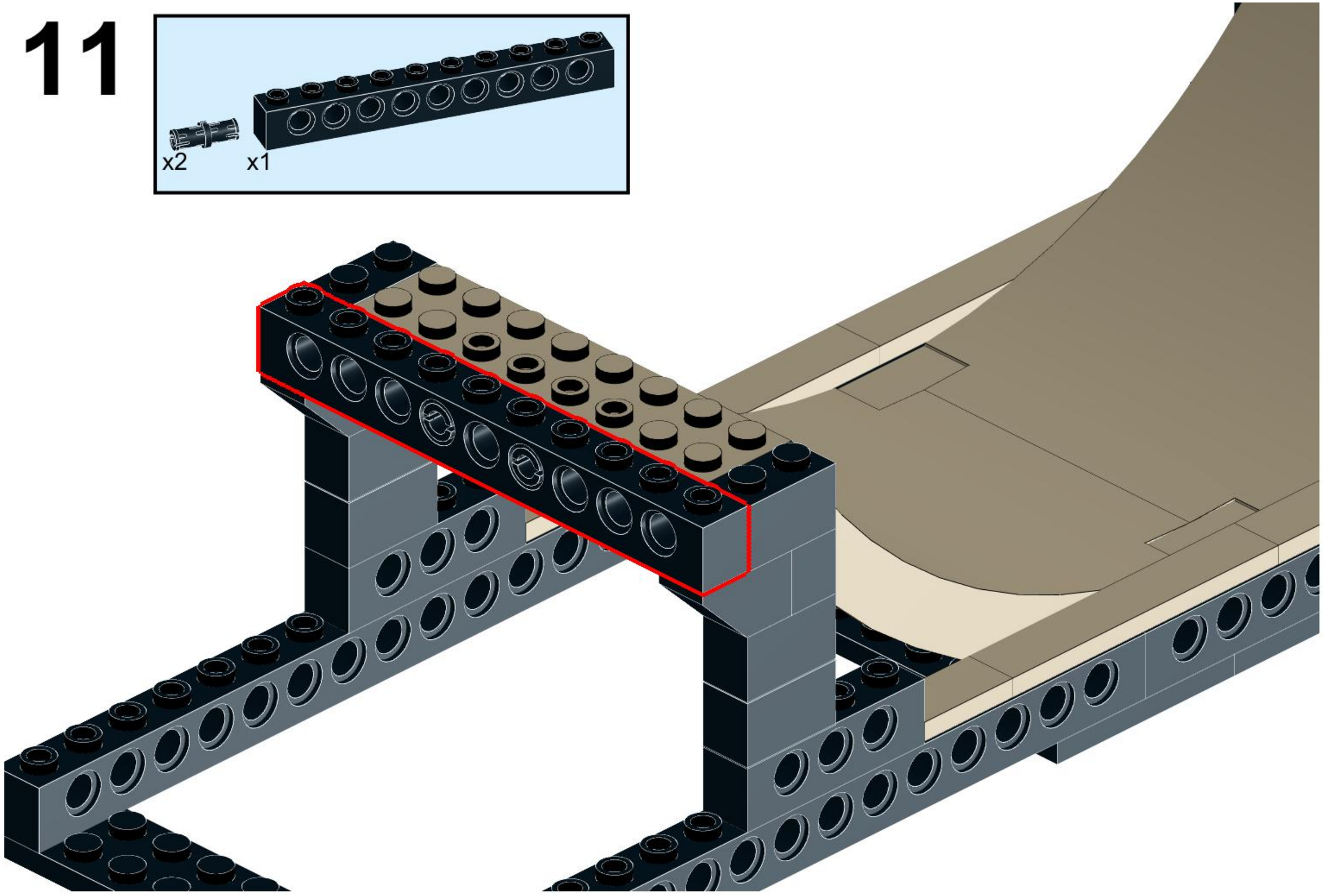

12

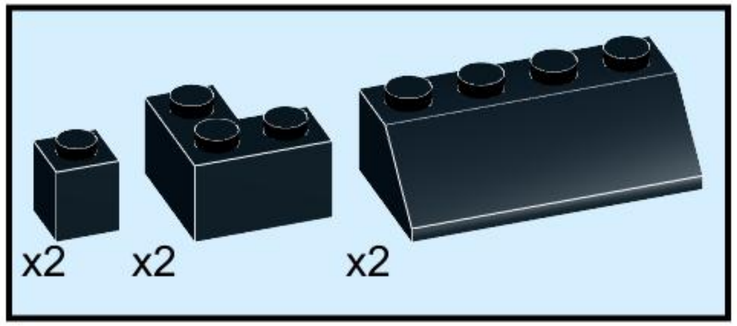

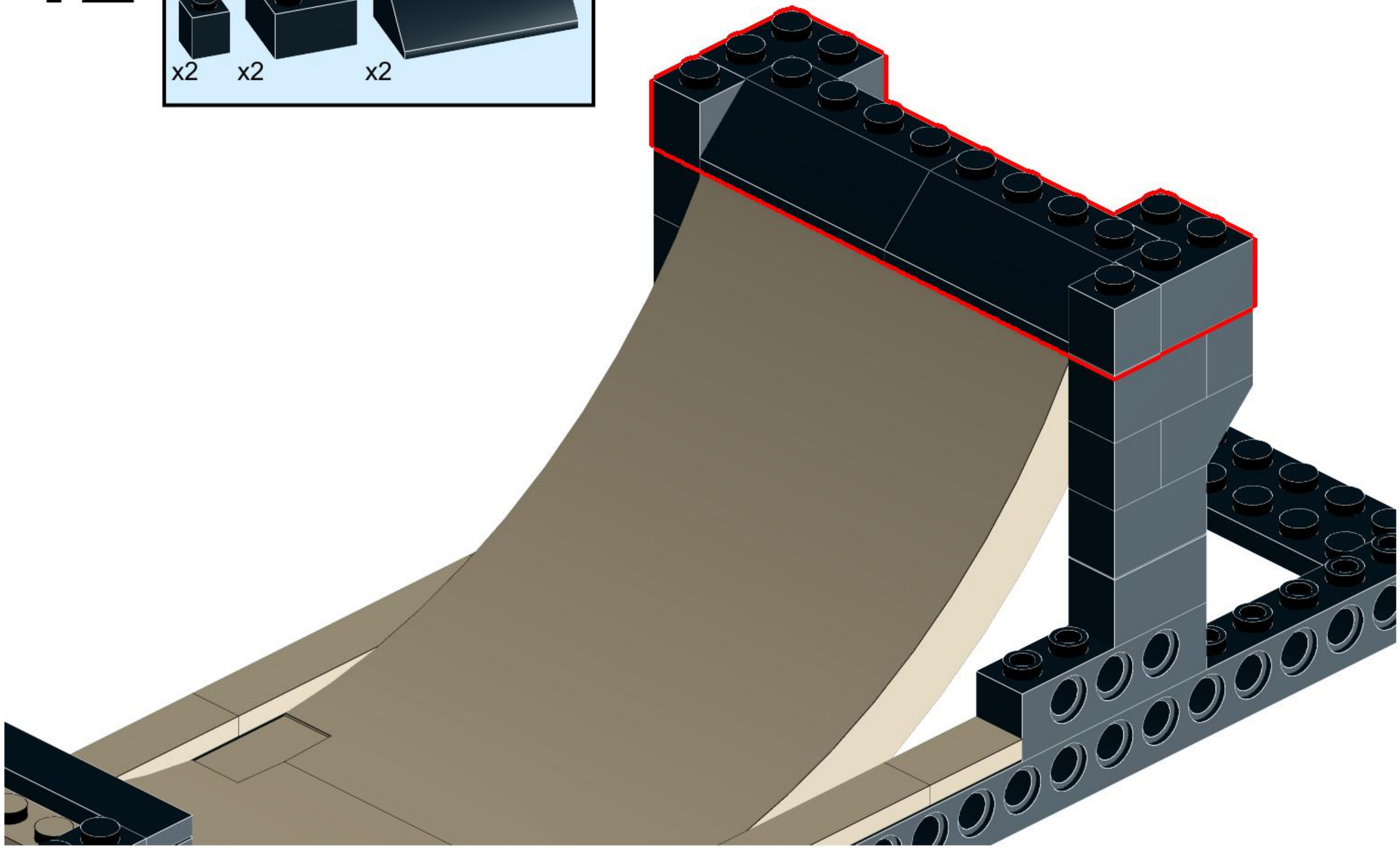

13

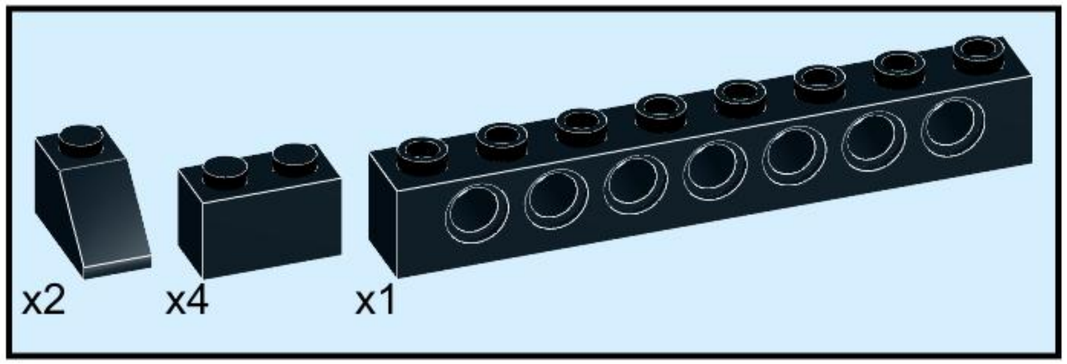

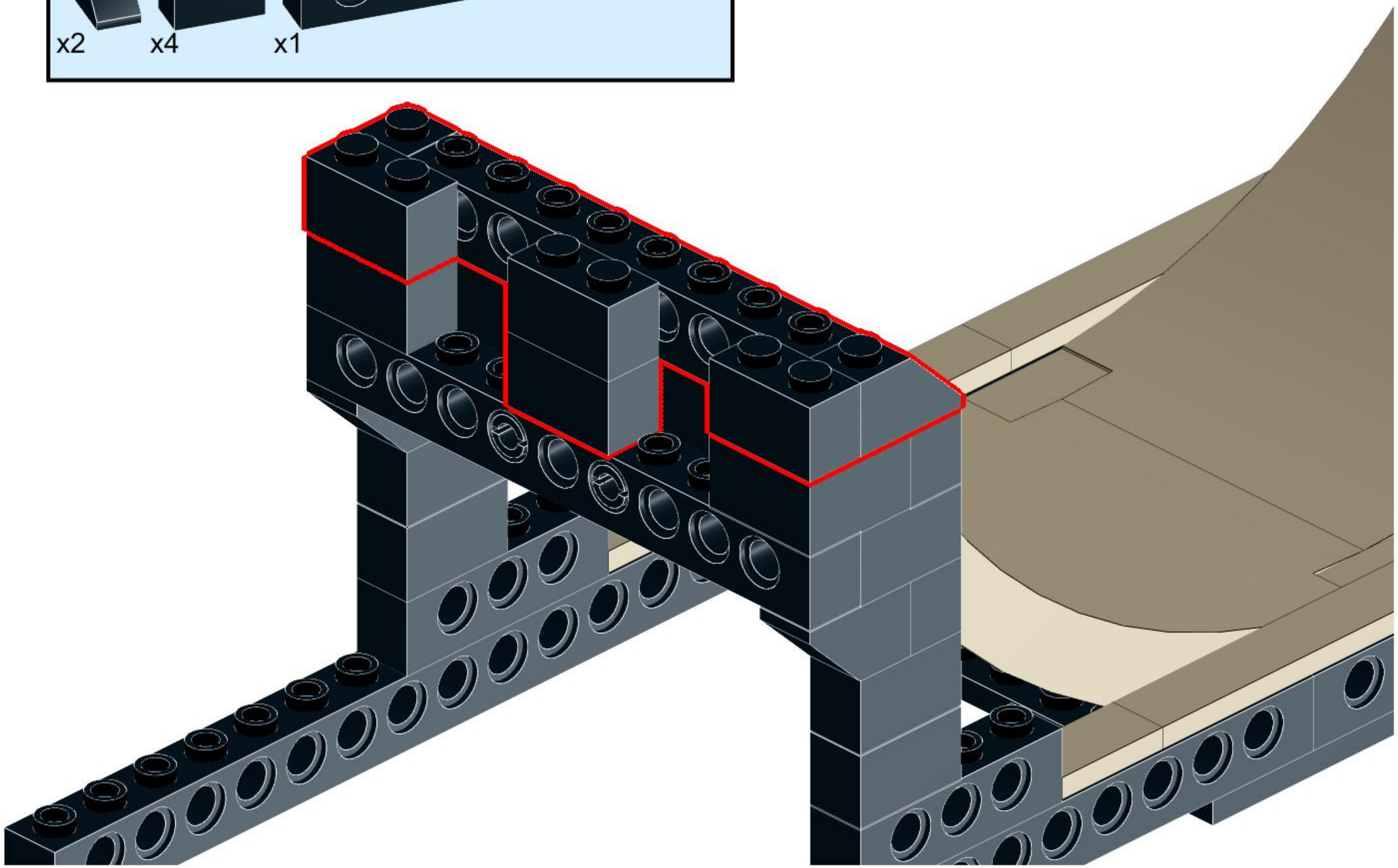

14

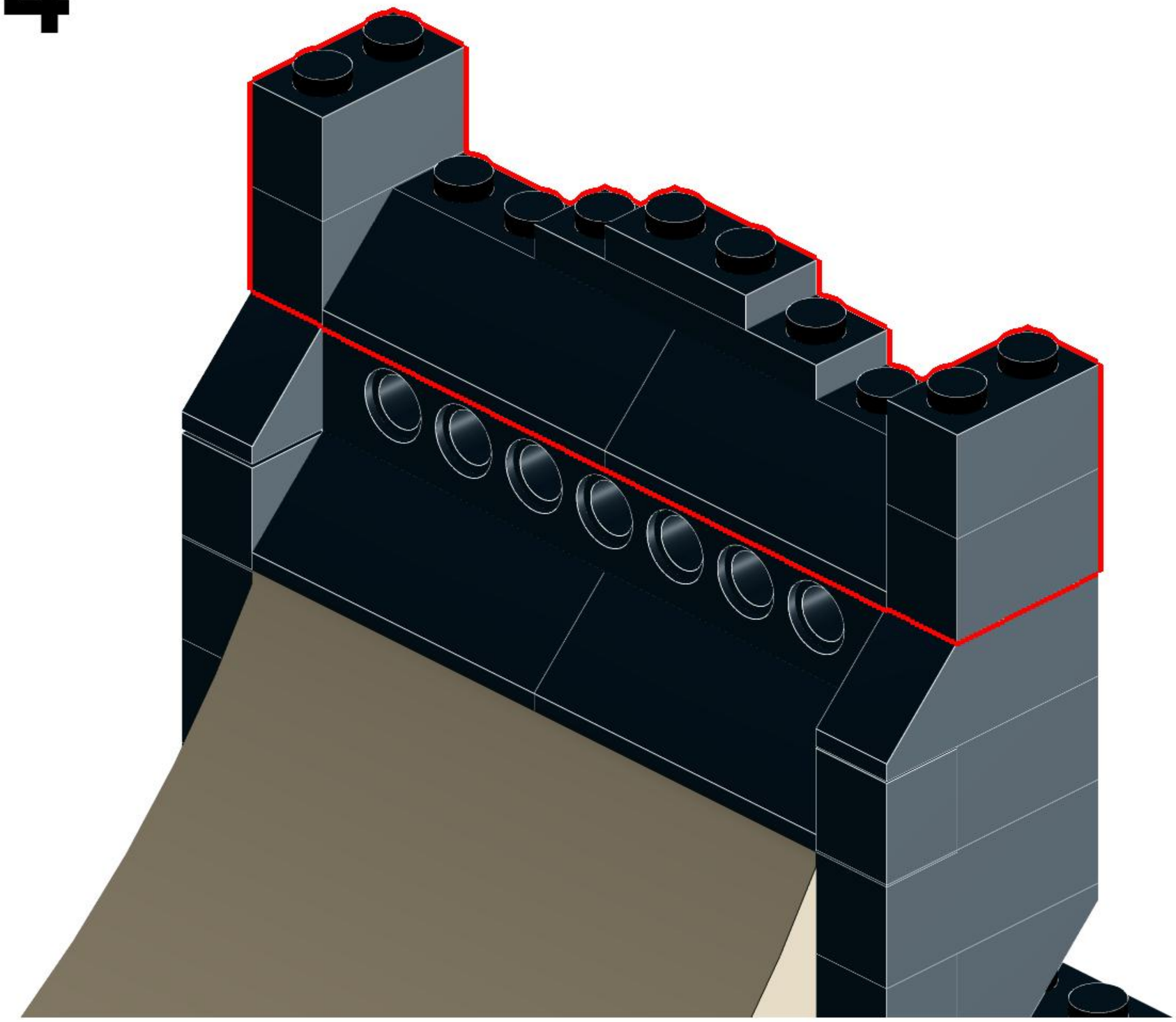

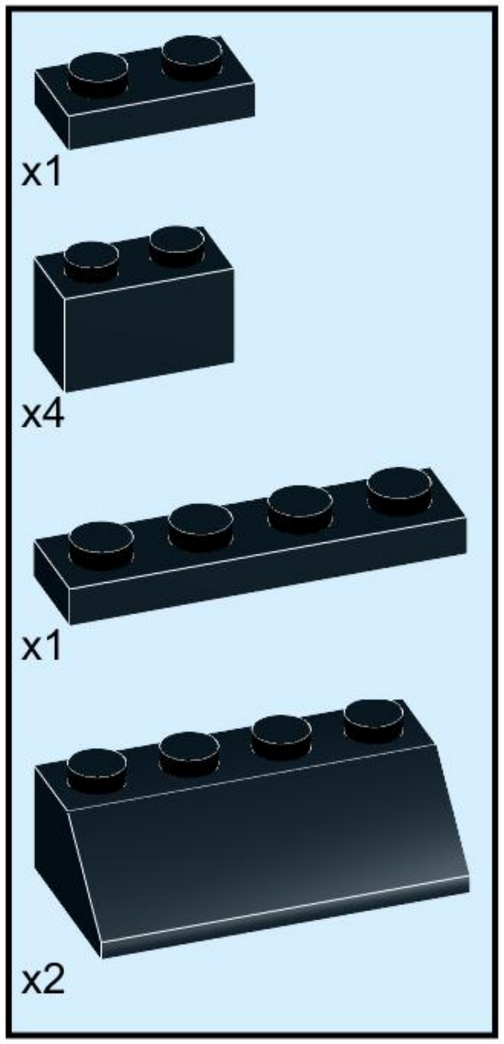

15

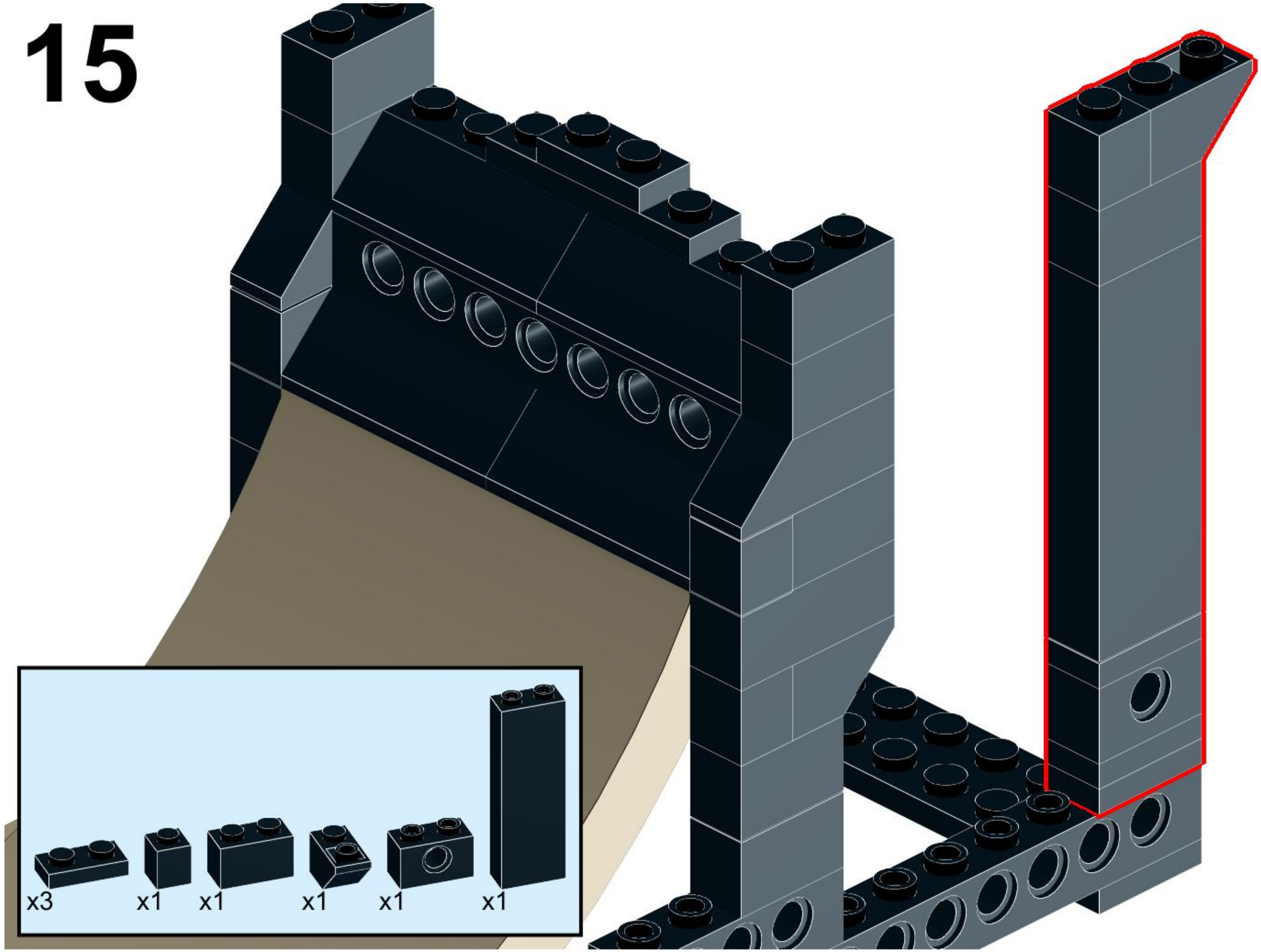

16

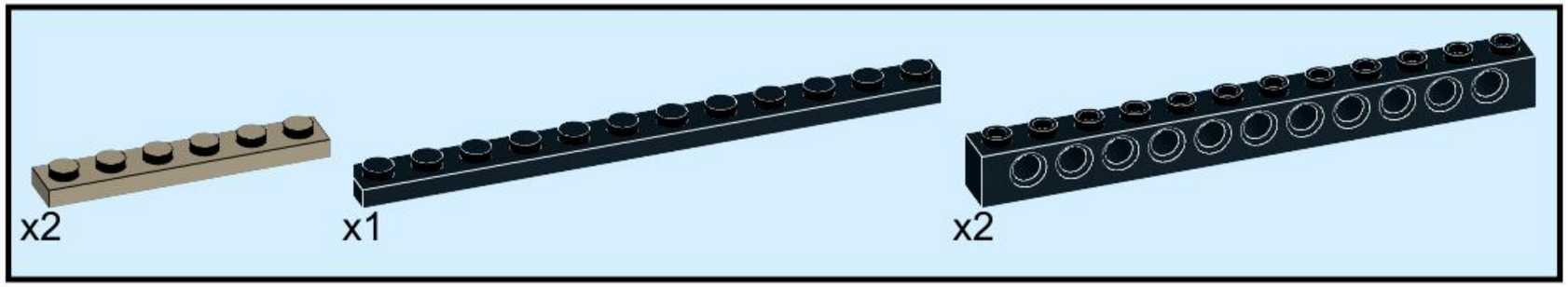

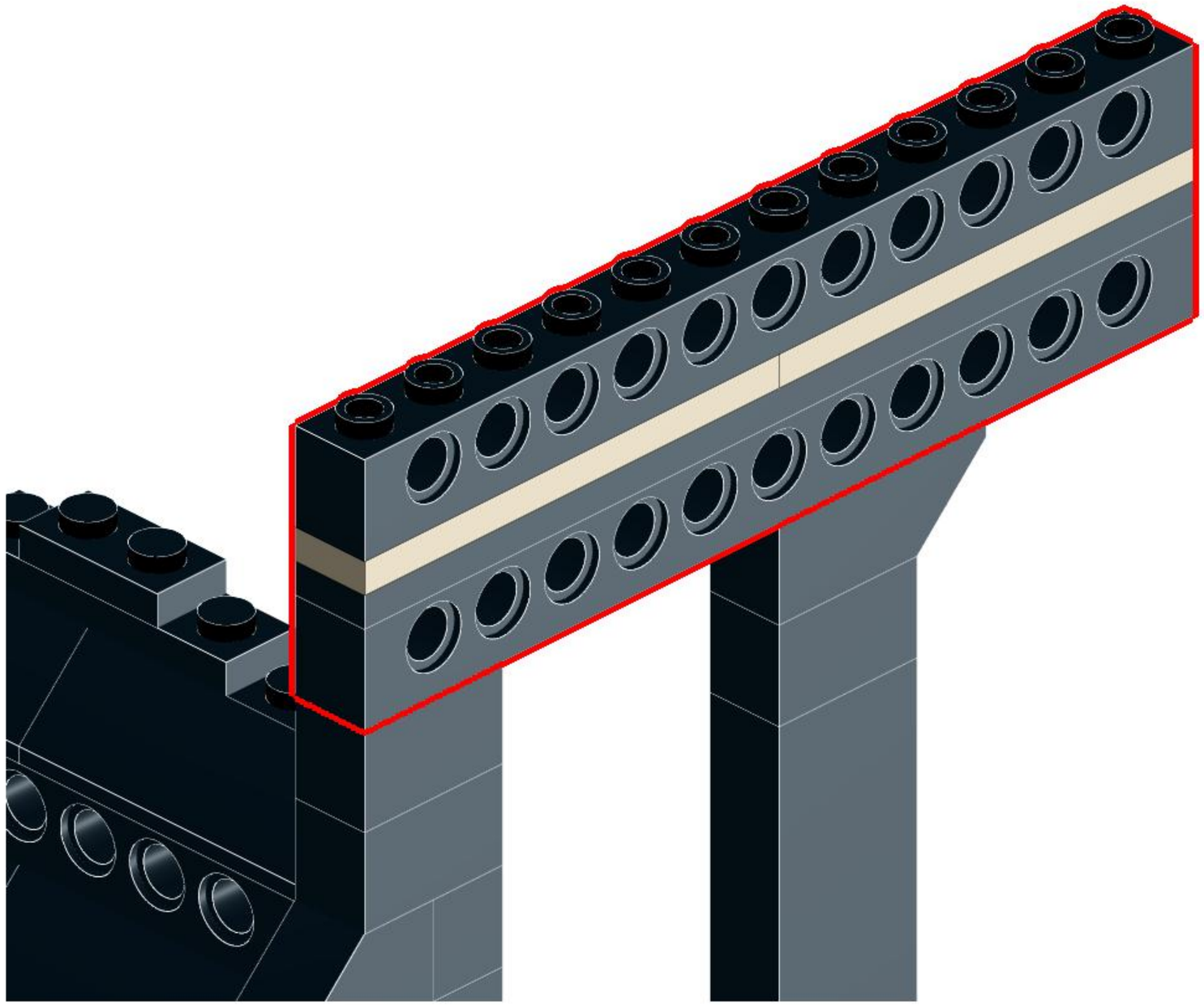

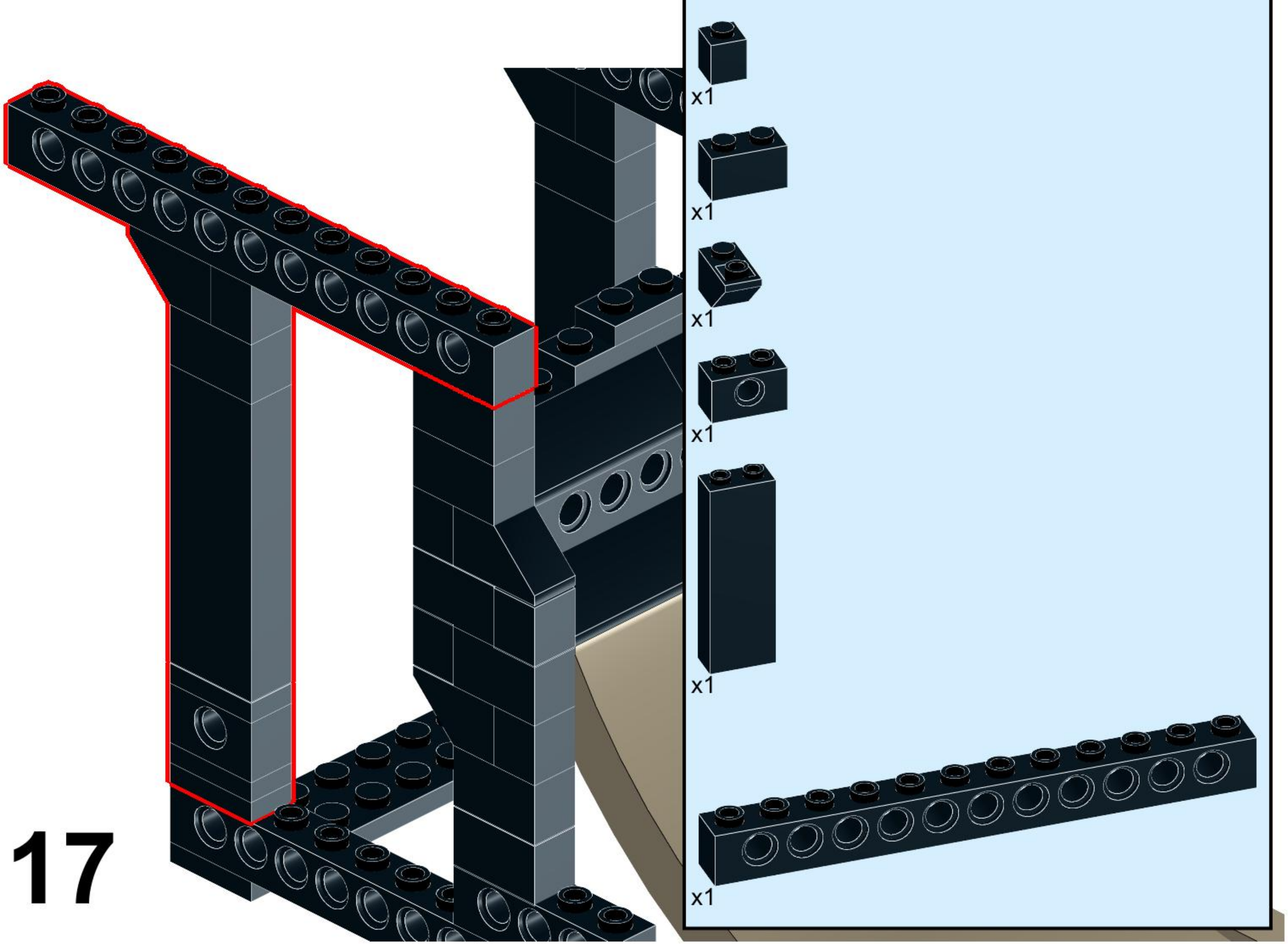
x1
x1
x1
x1
x1
x1

18

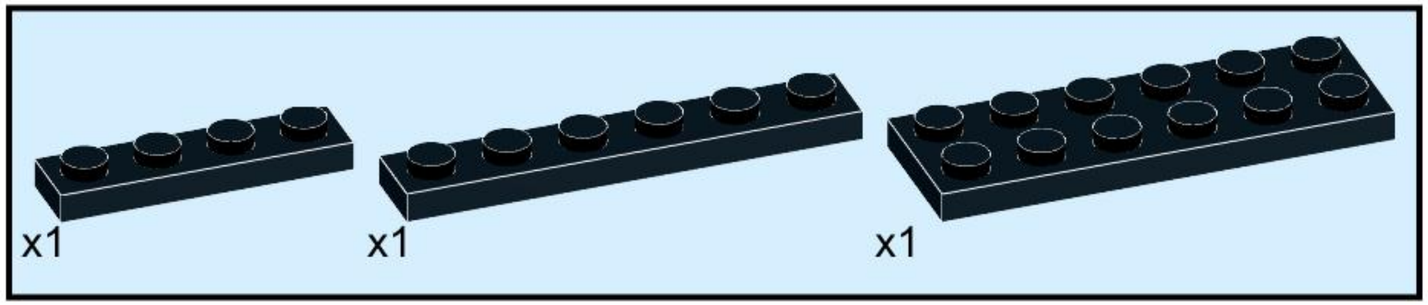

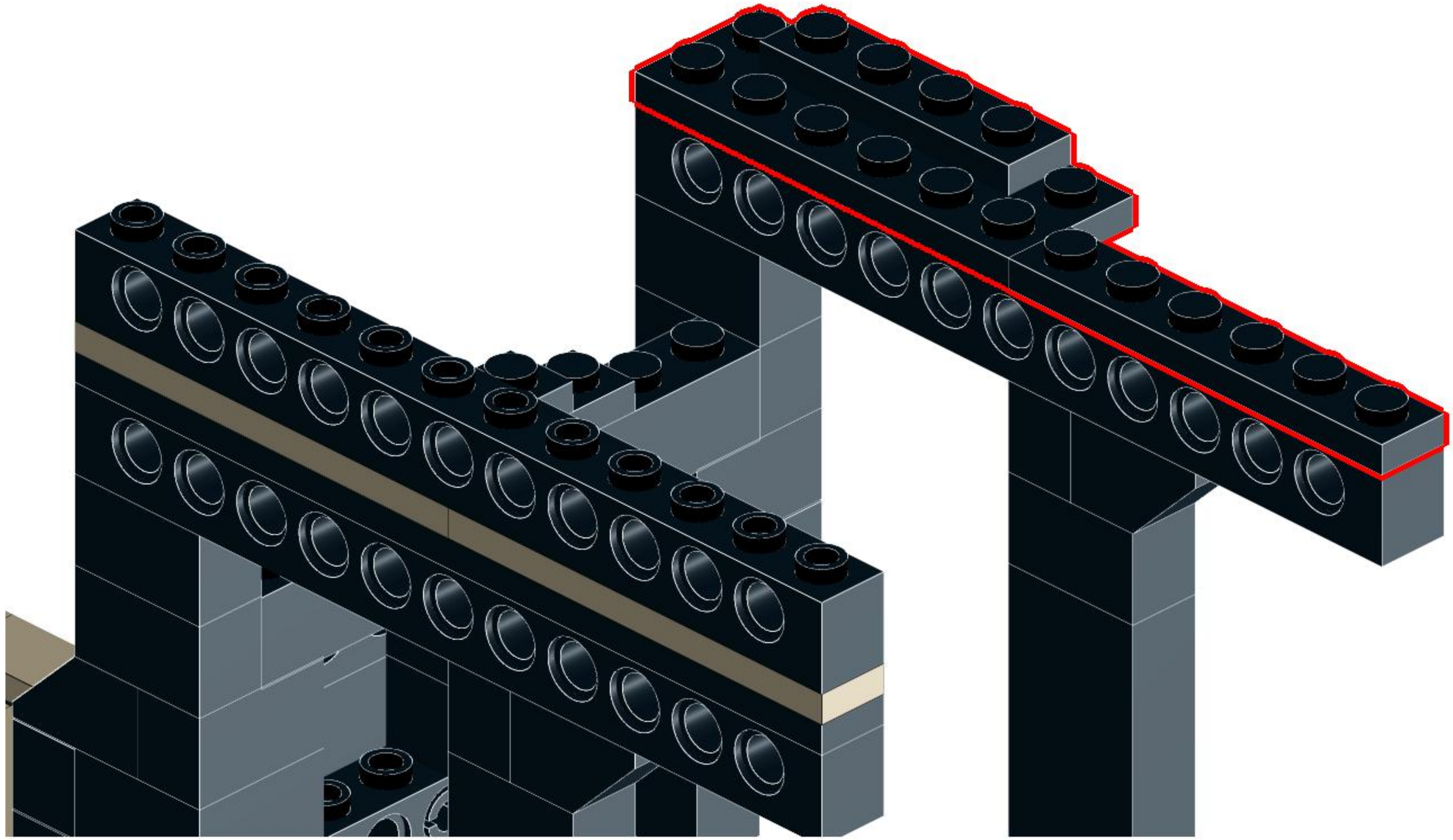

19

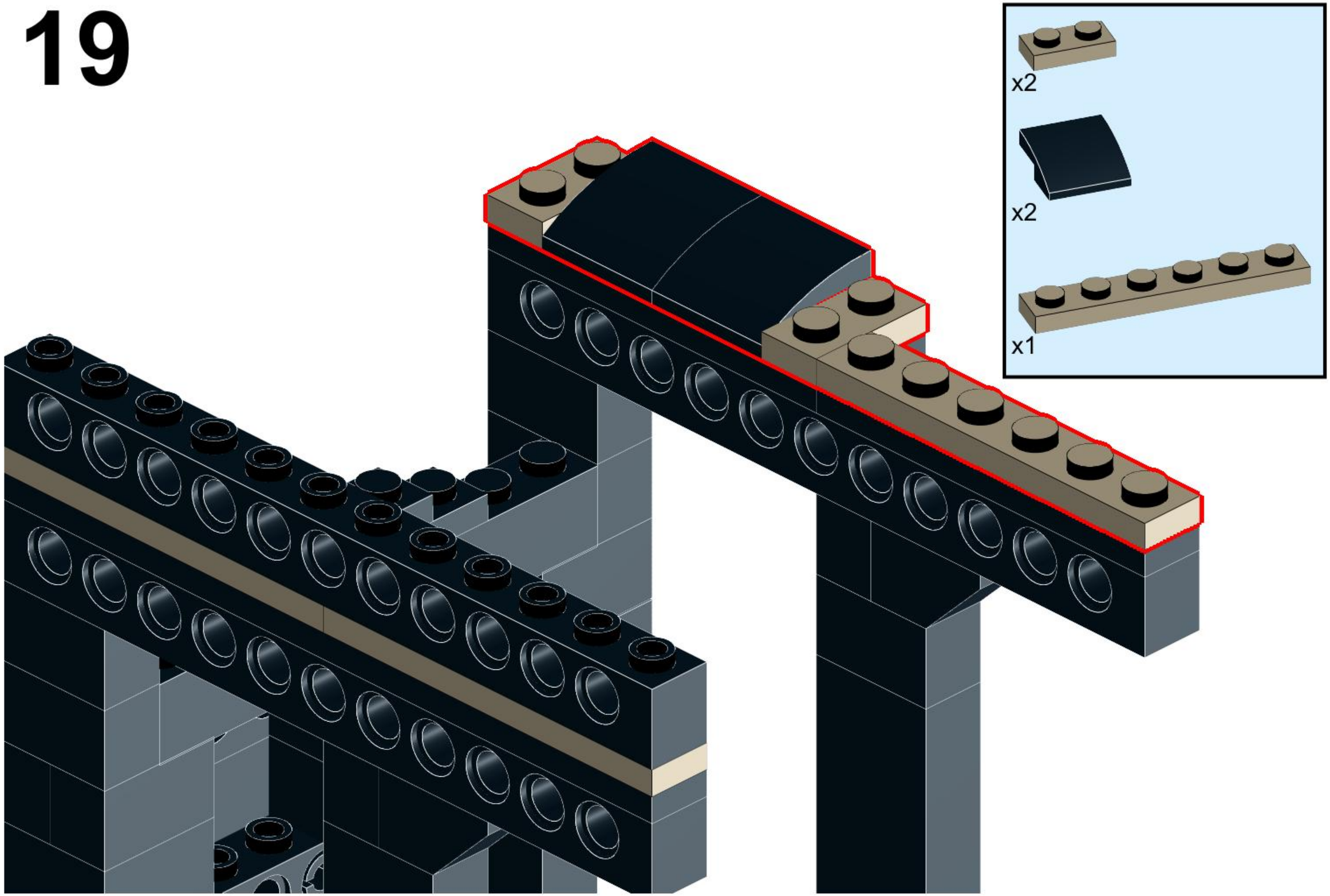

20

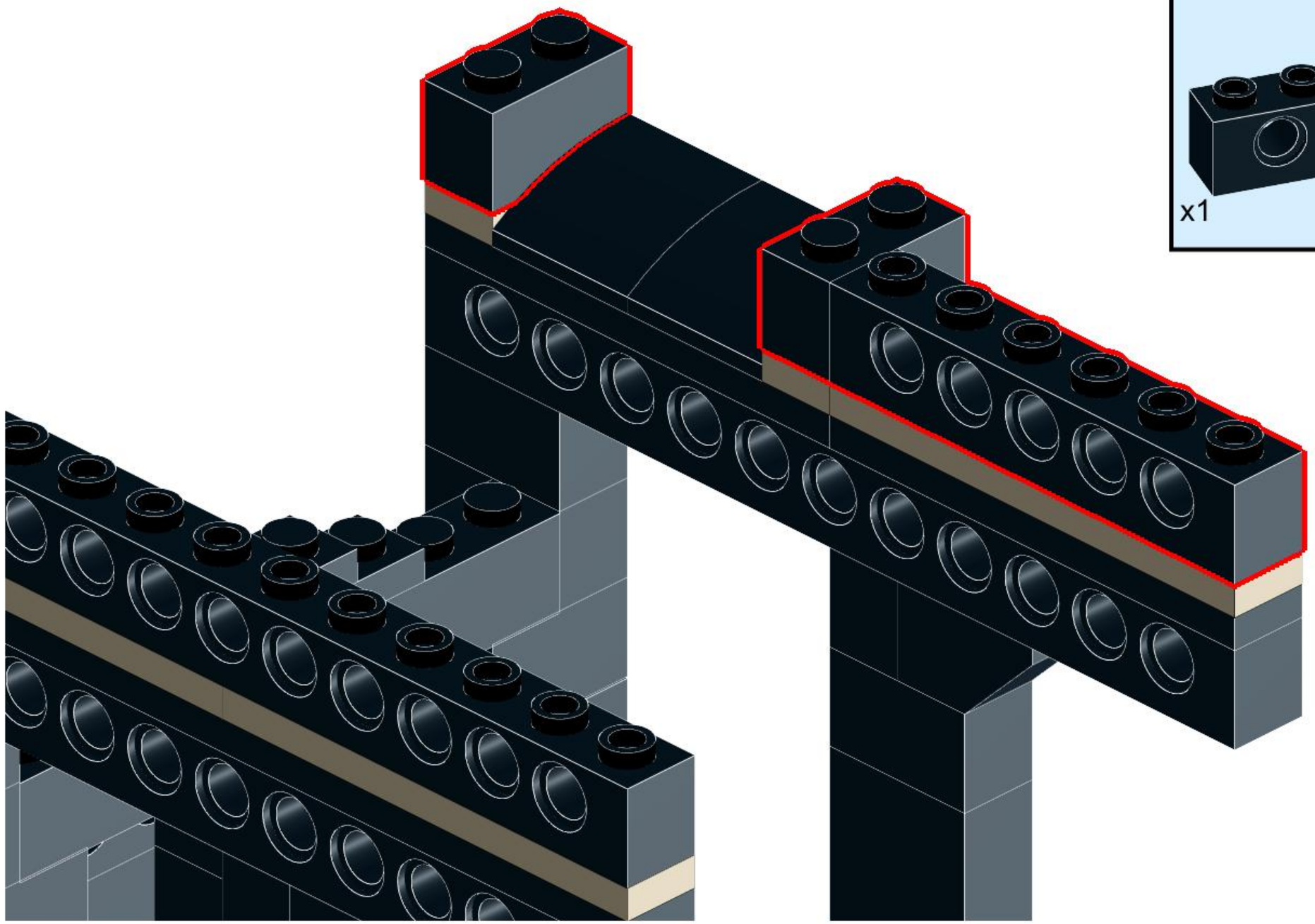

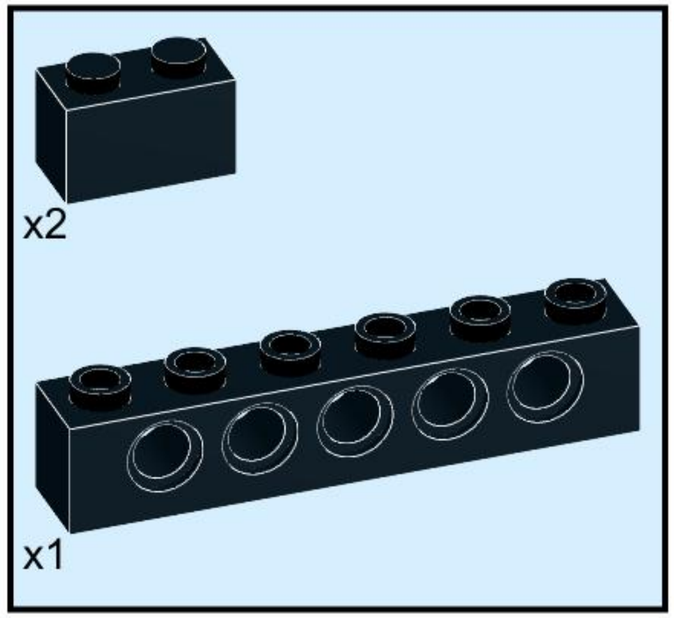

21

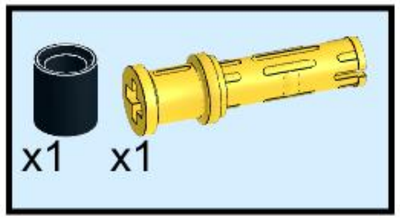

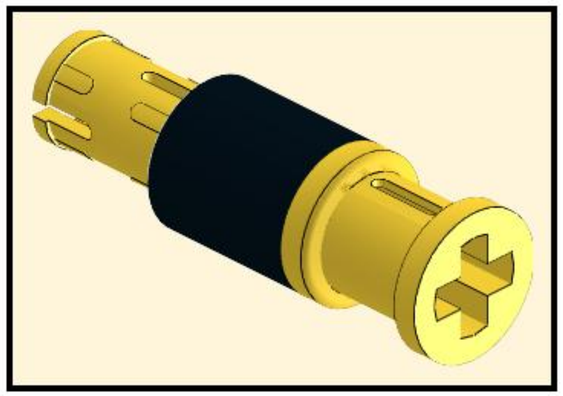

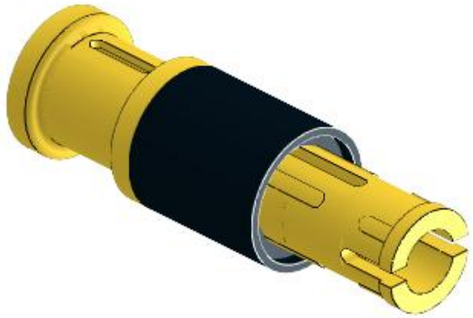

22

Remove this pin to run in stand-alone configuration.

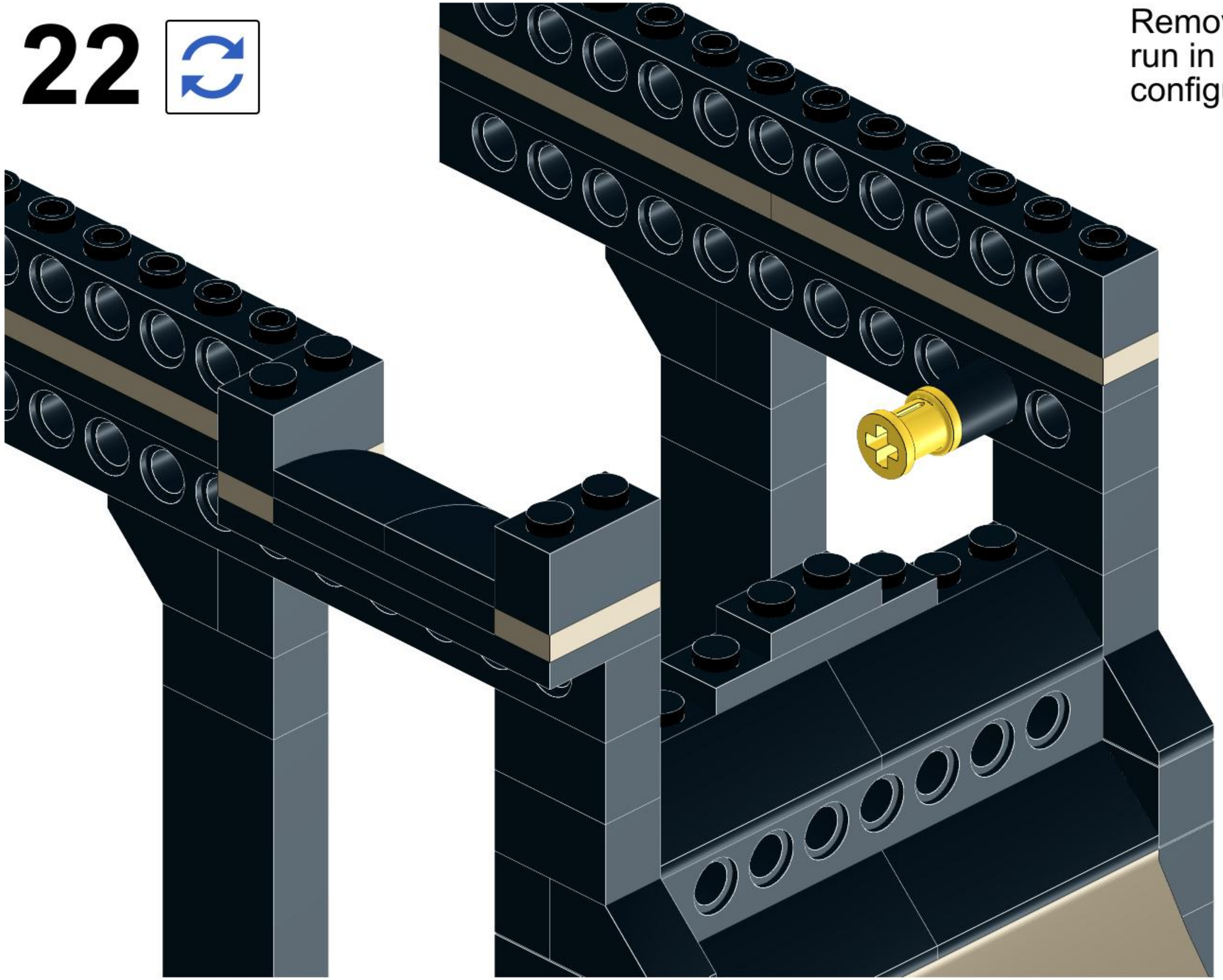

23

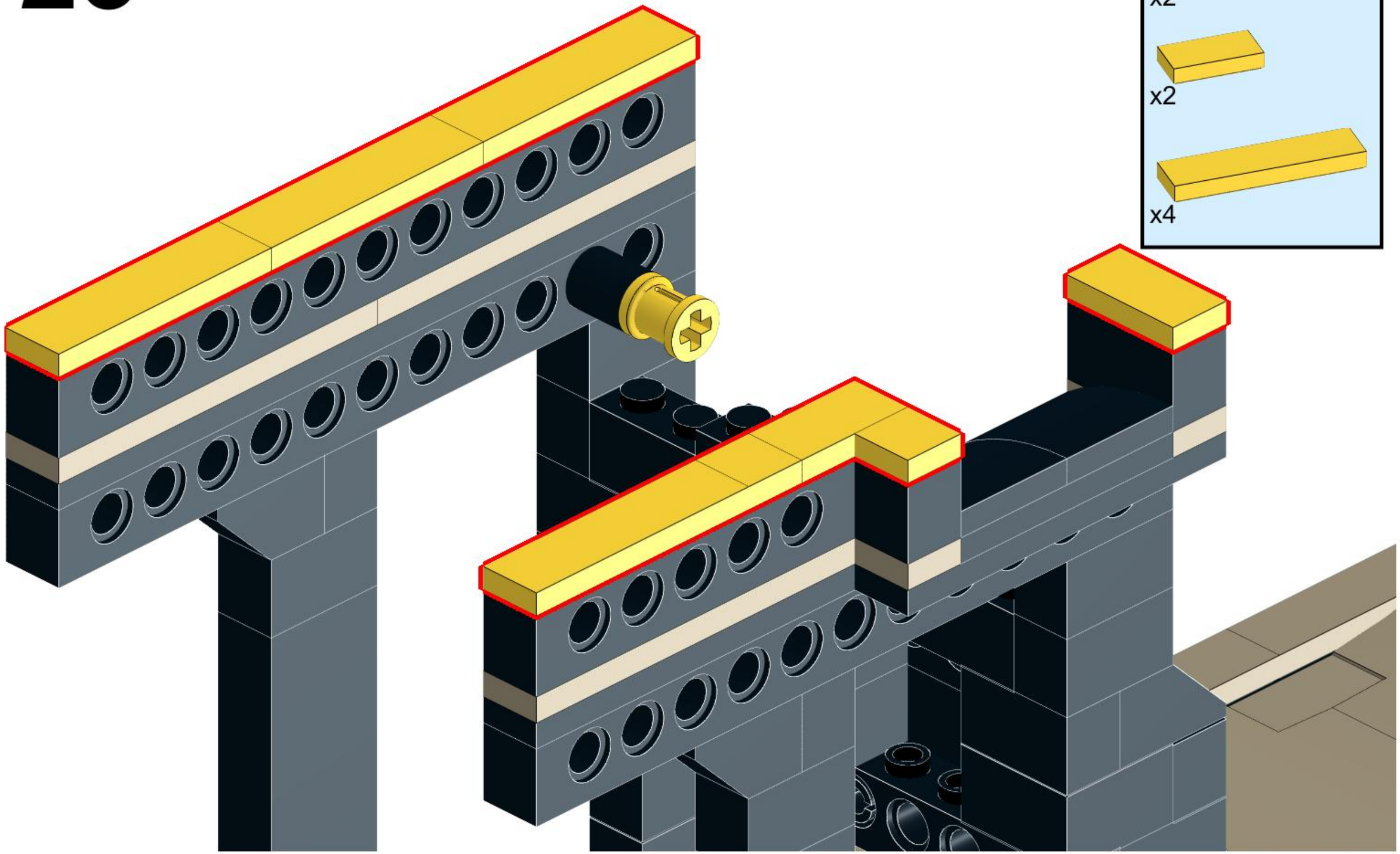

24

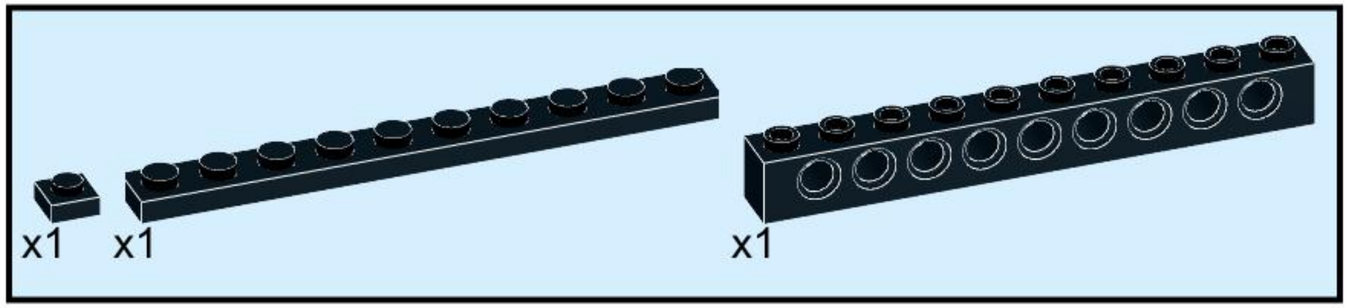

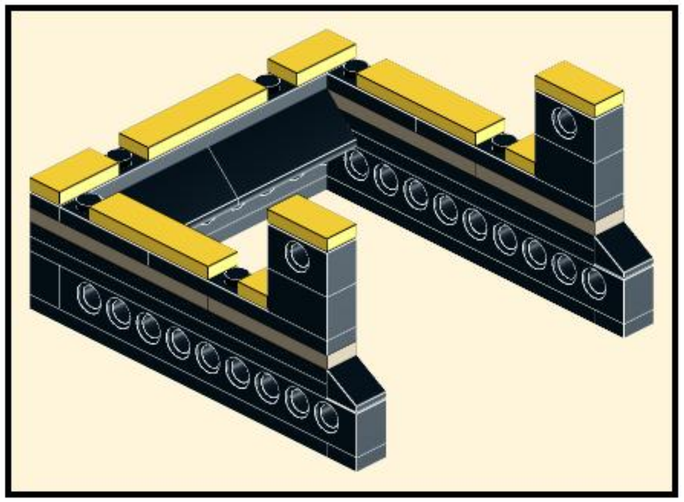

25

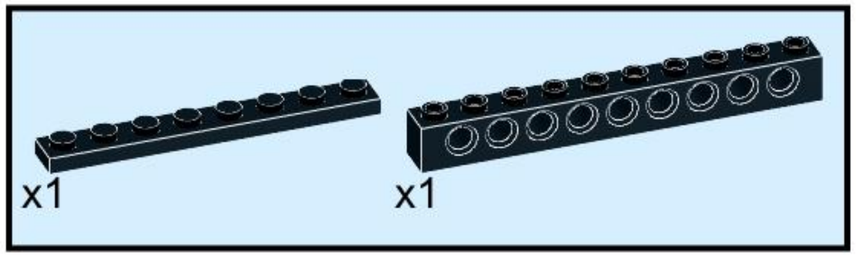

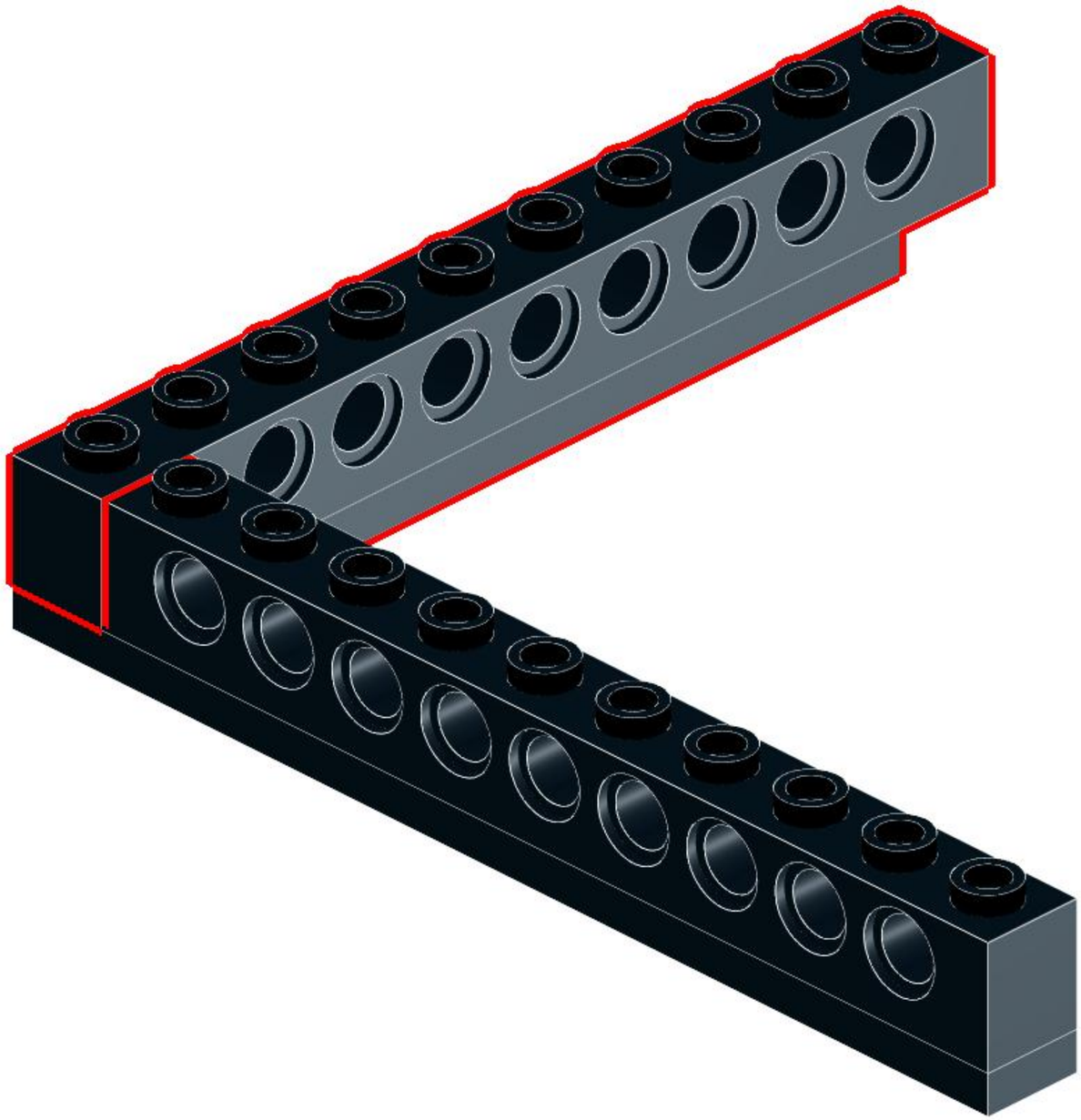

26

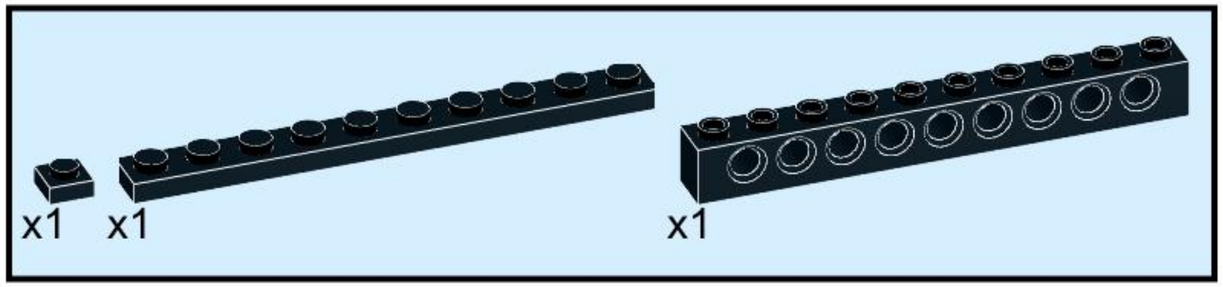

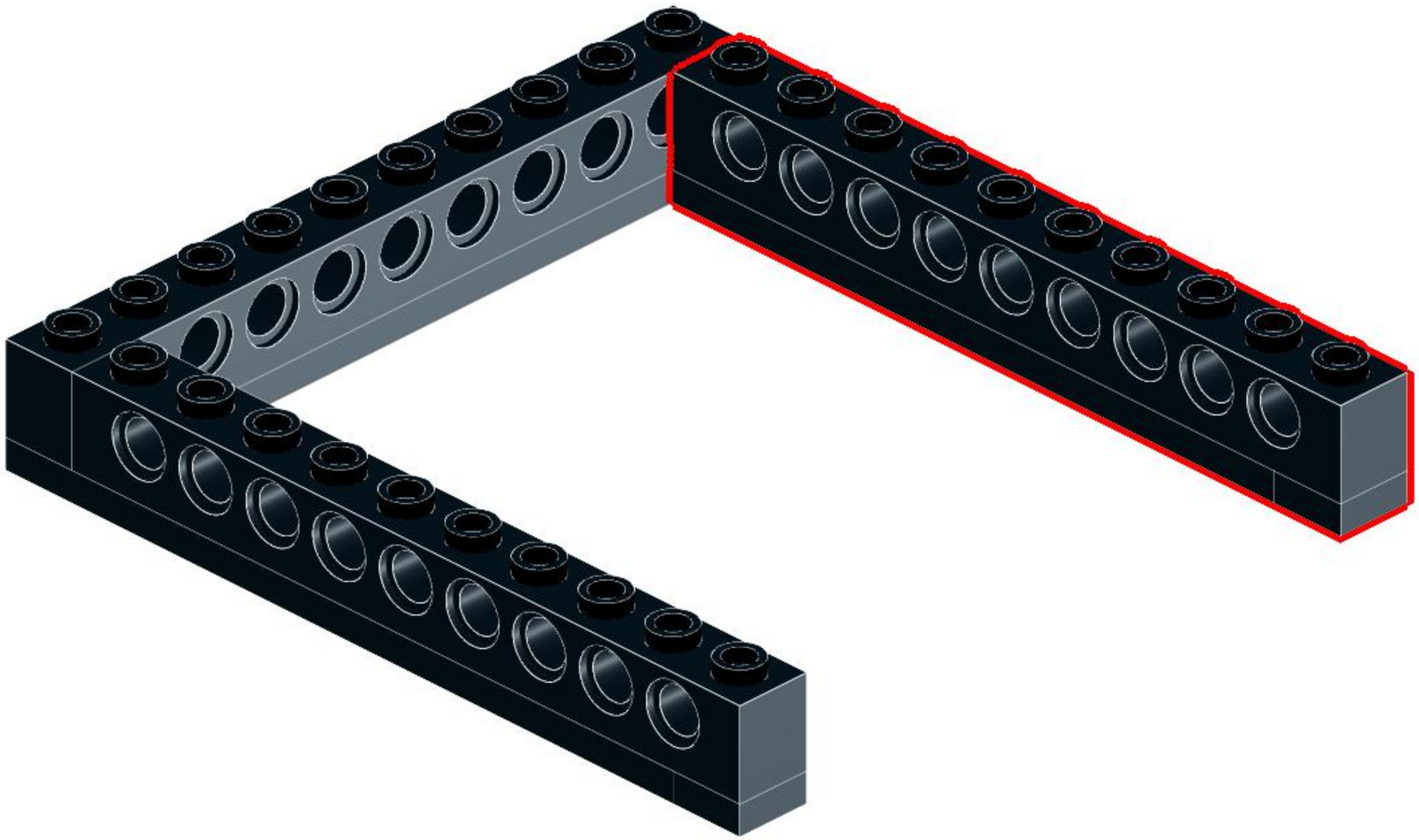

27

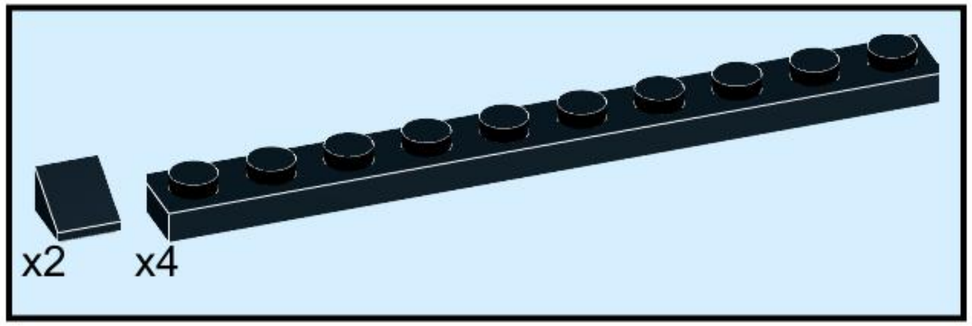

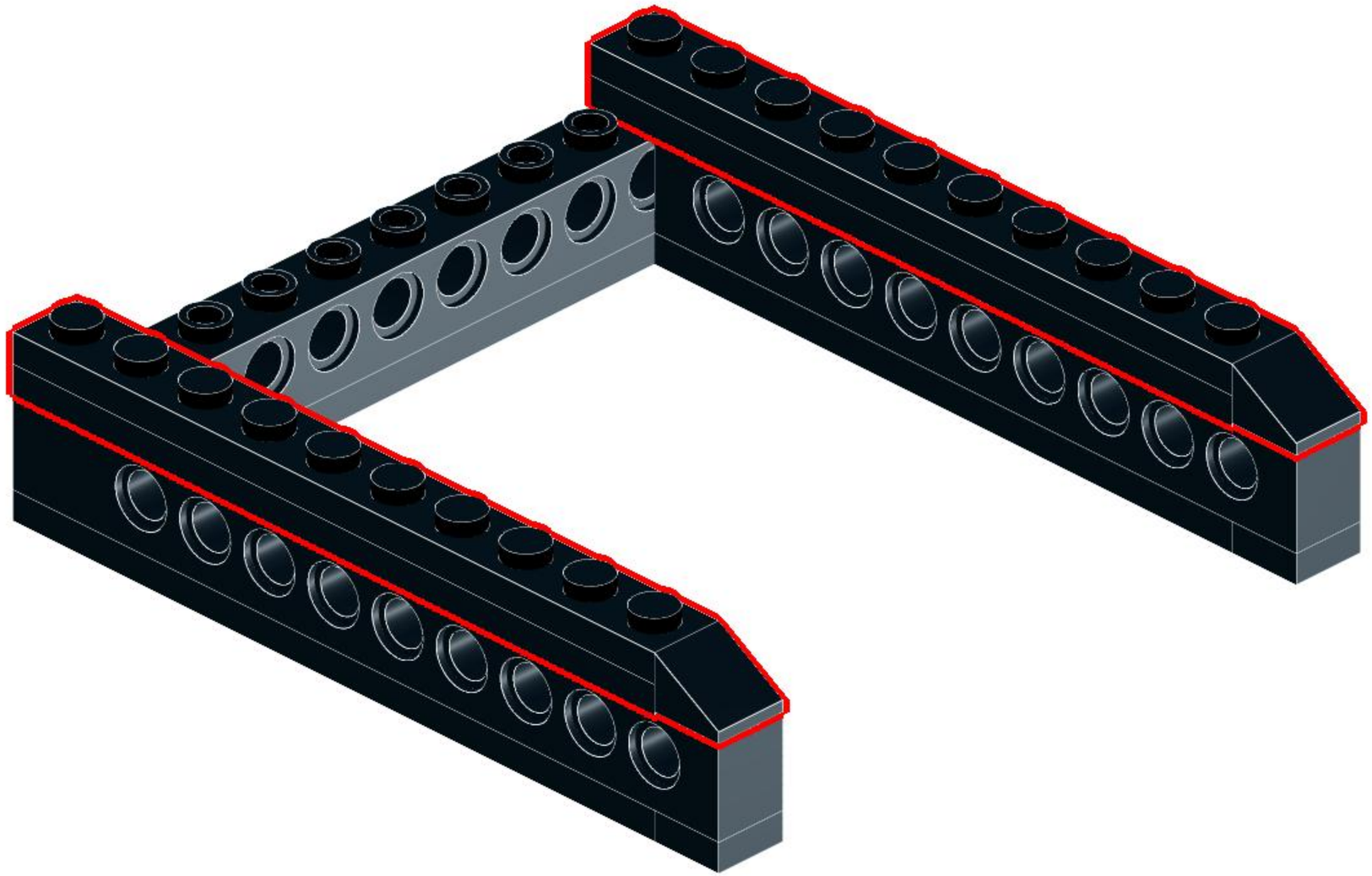

28

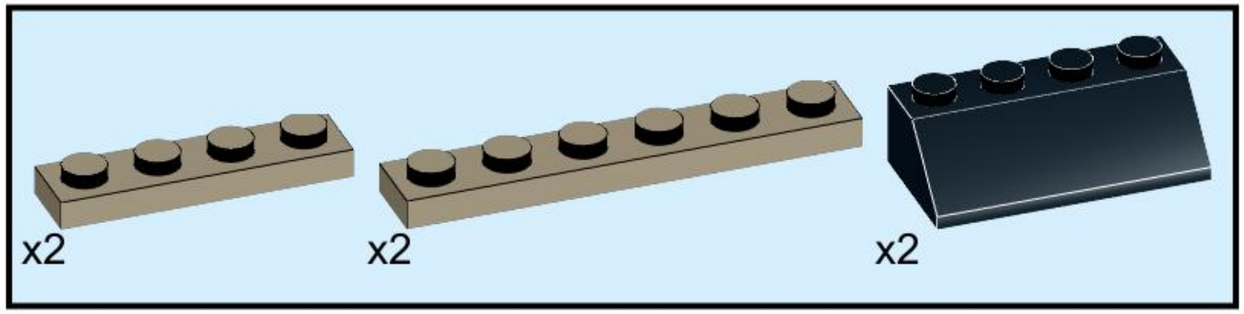

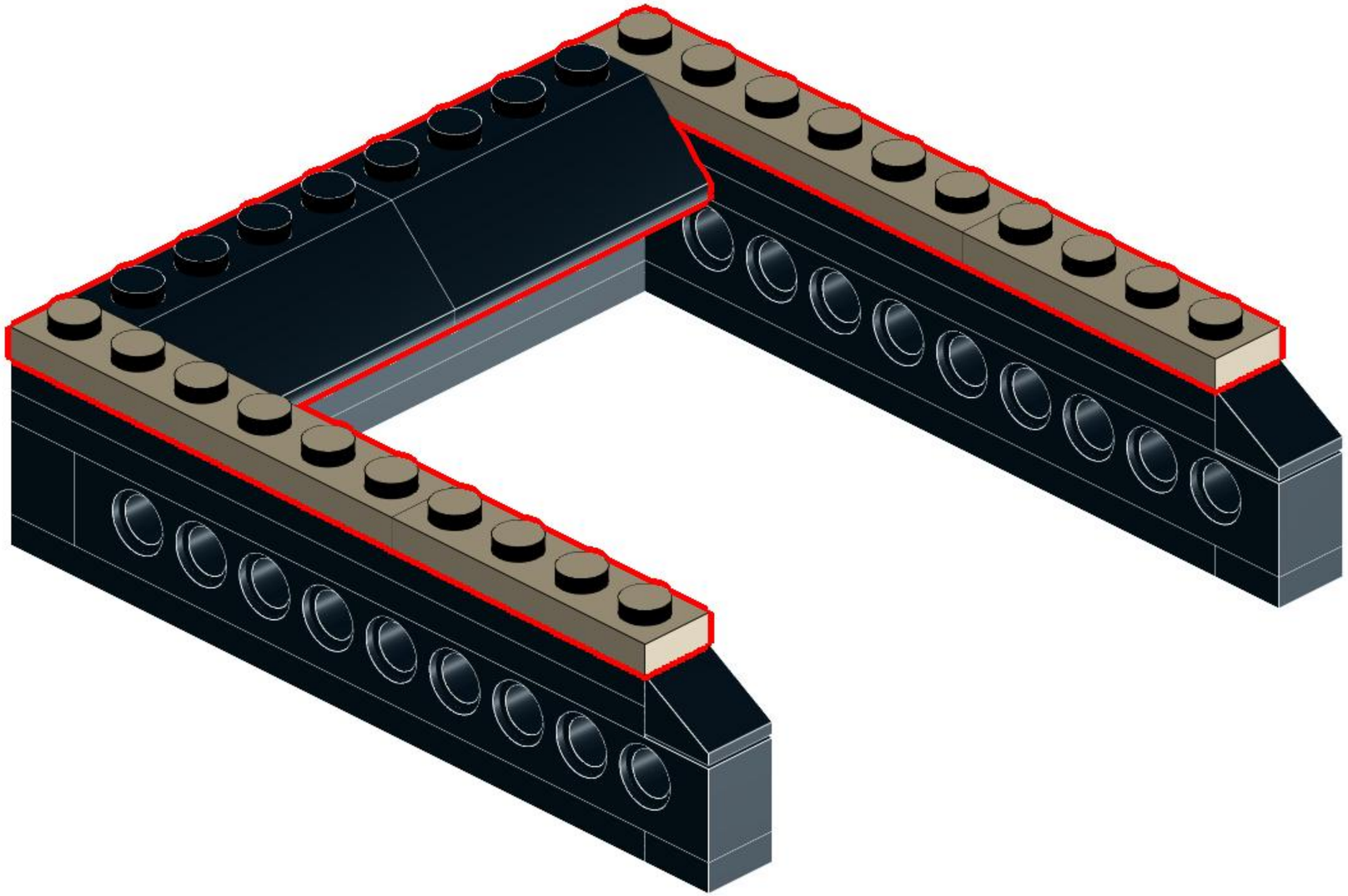

29

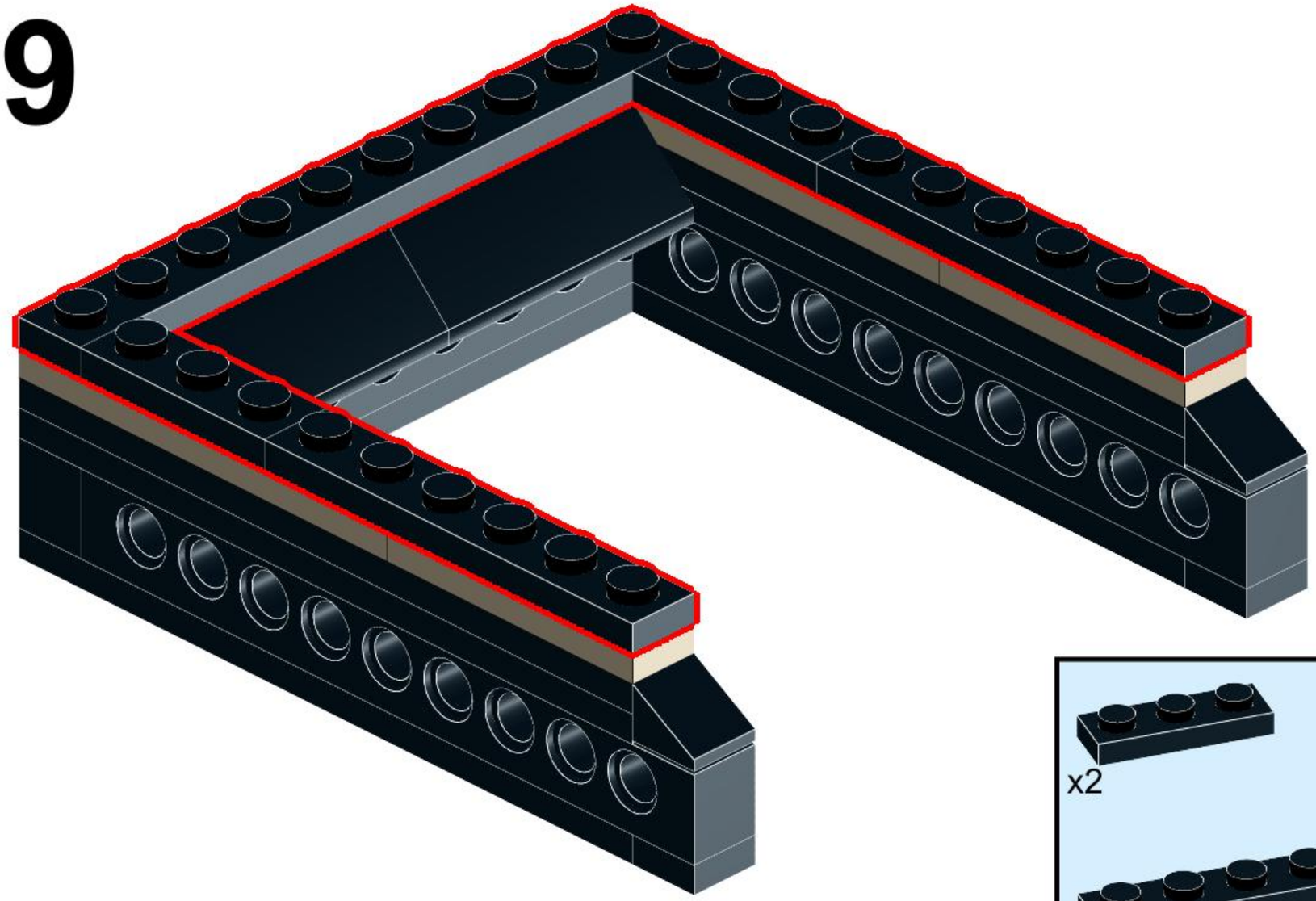

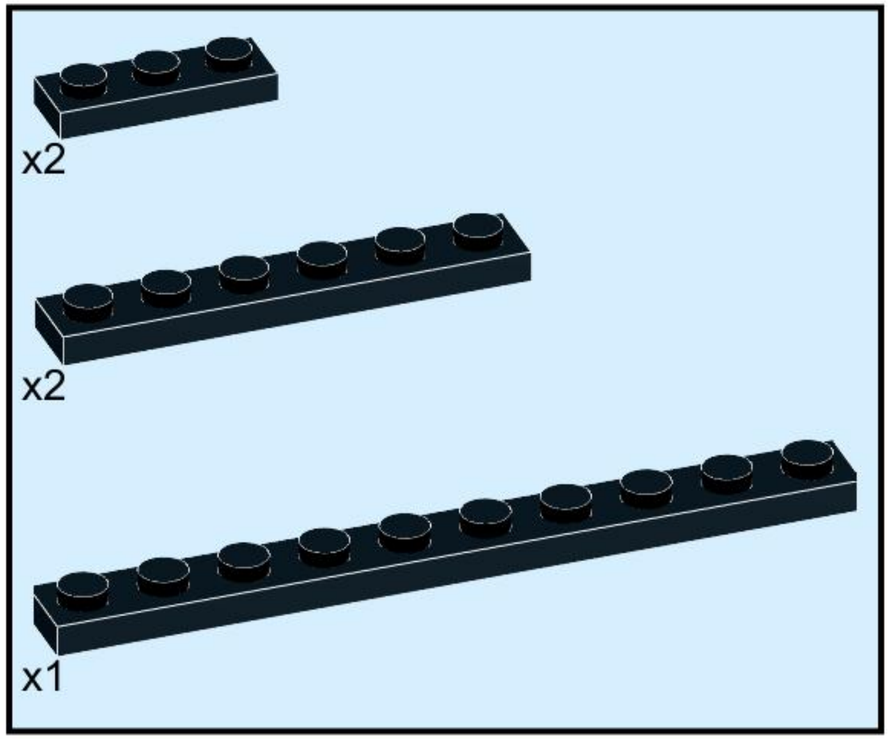

30

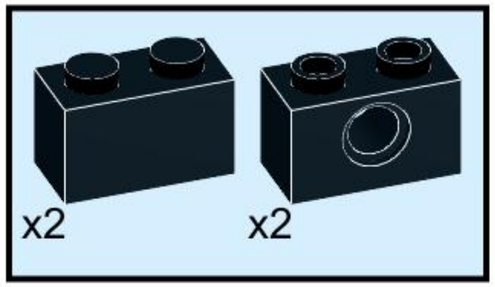

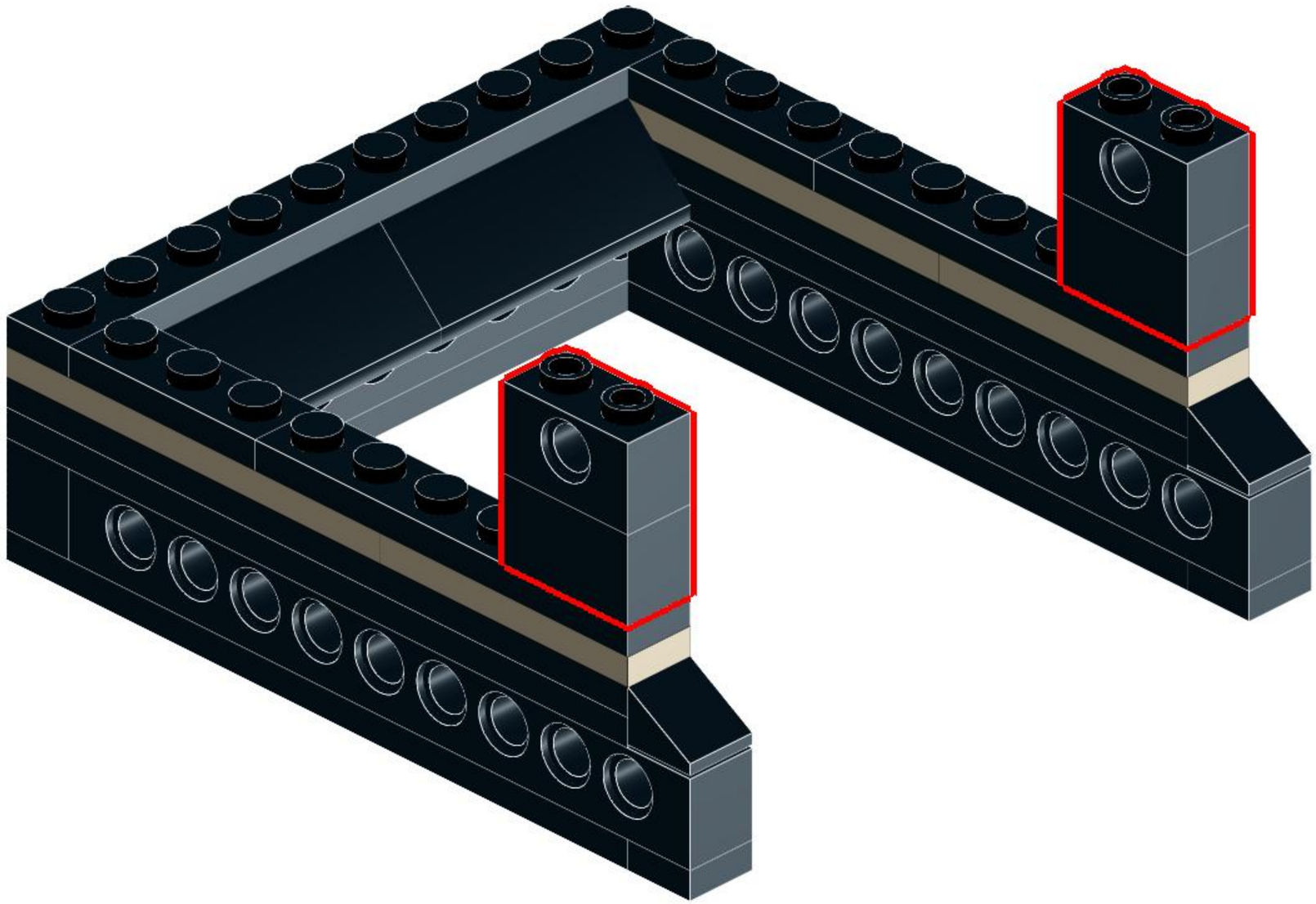

31

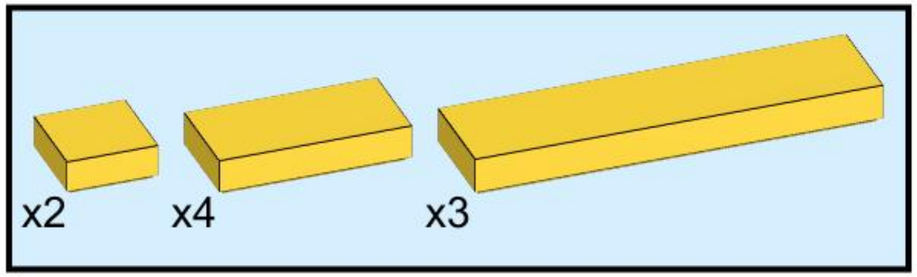

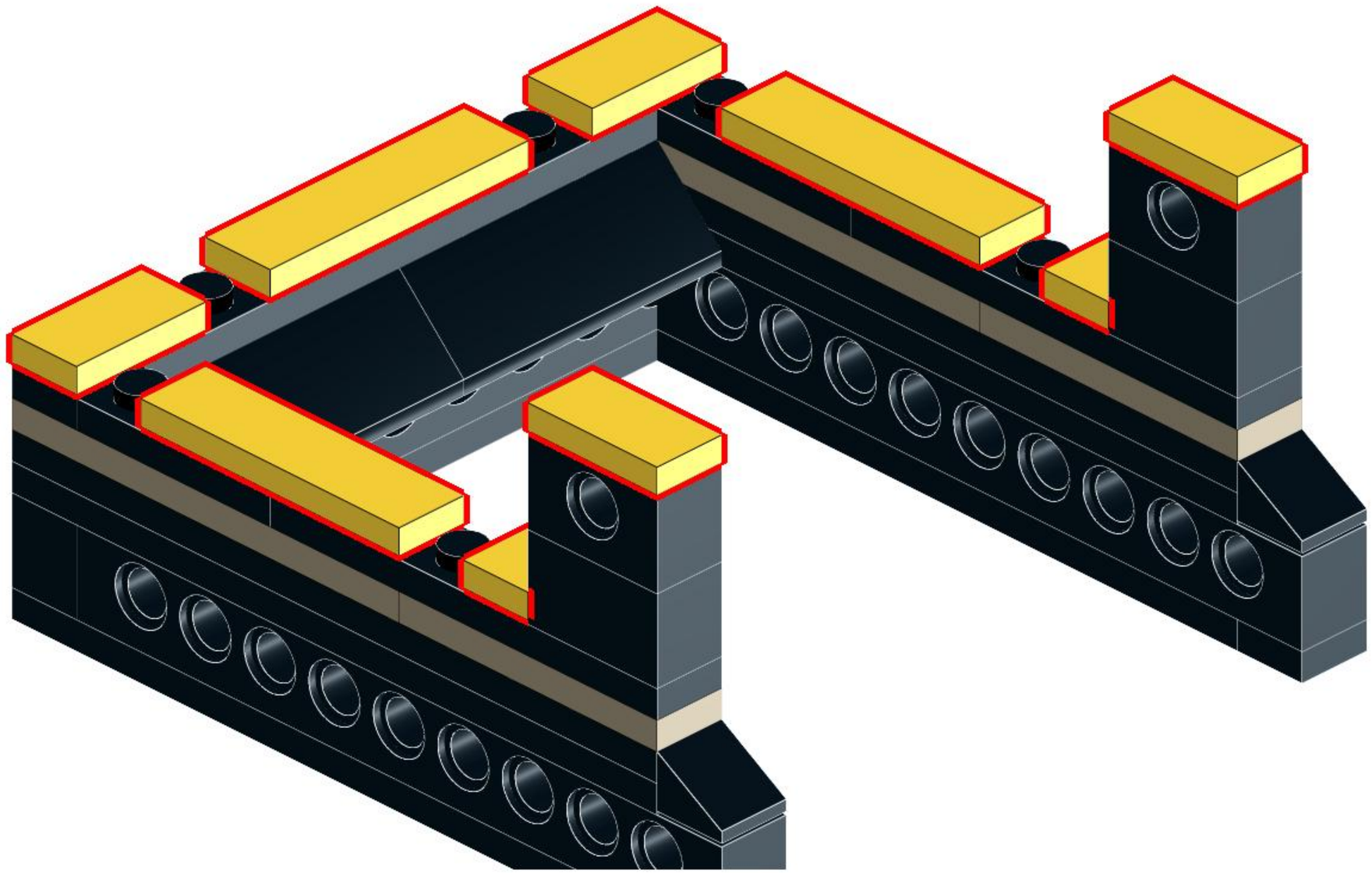

32

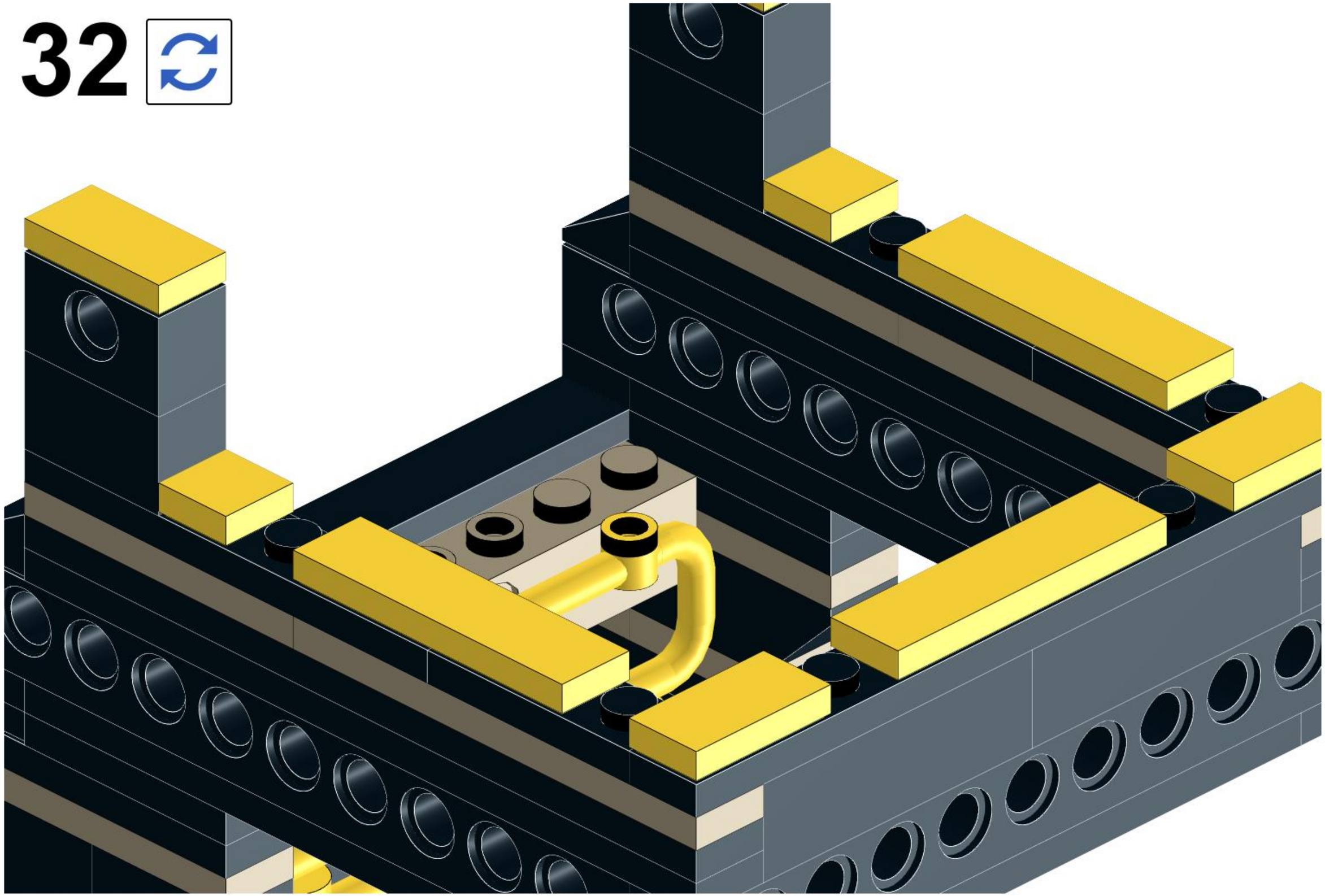

33

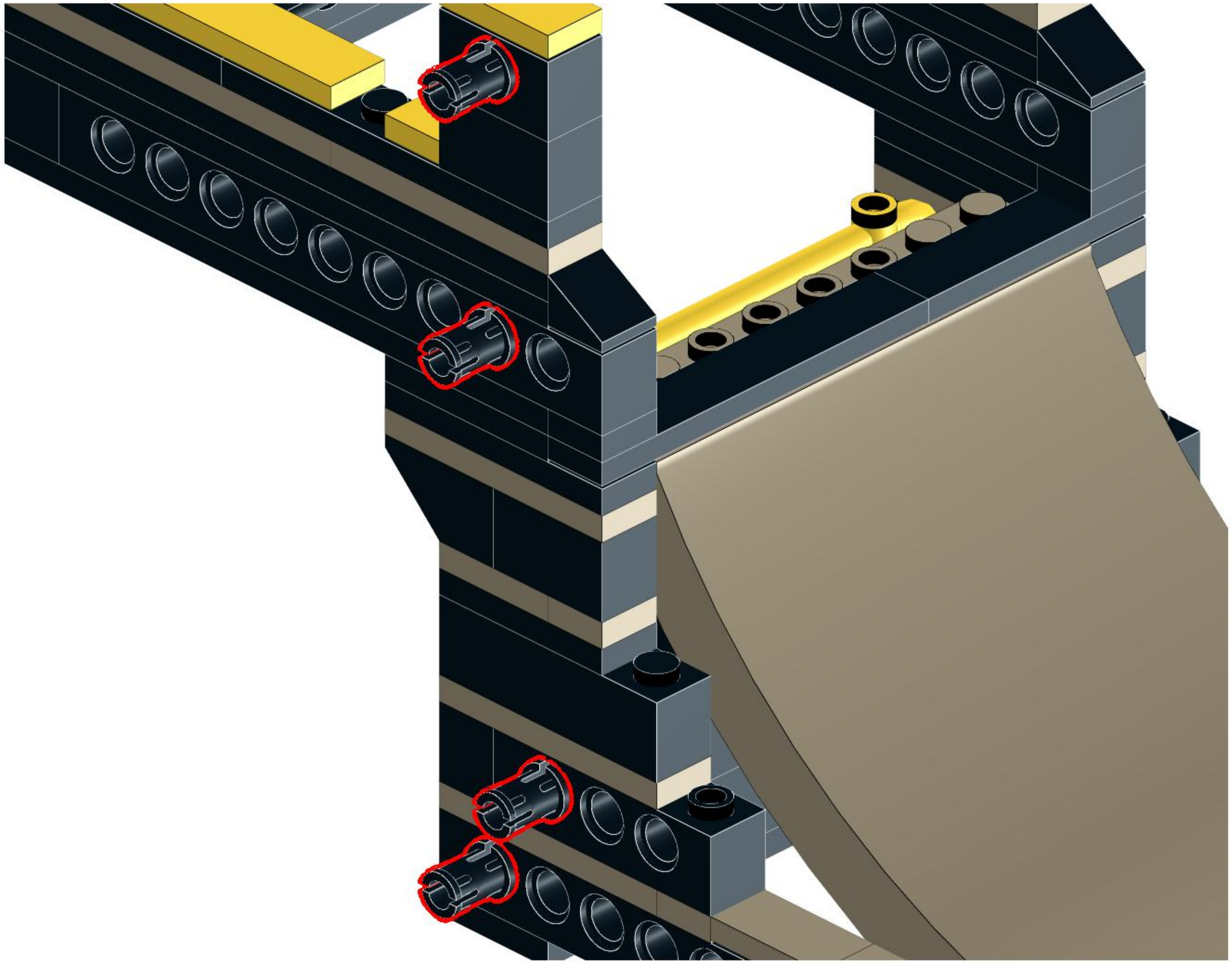

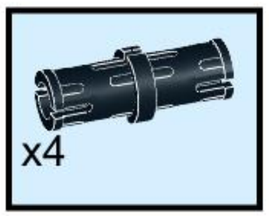

34

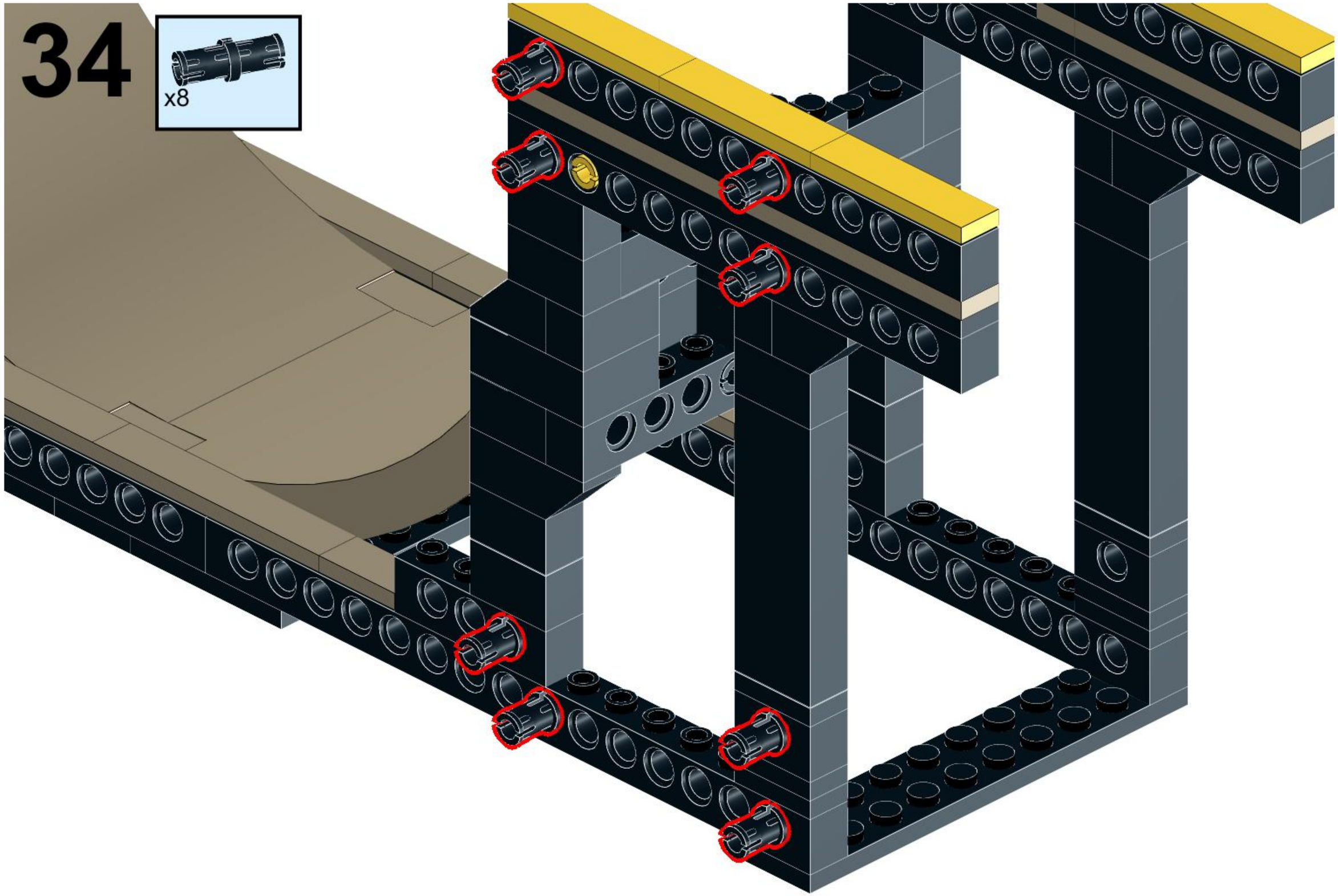

35

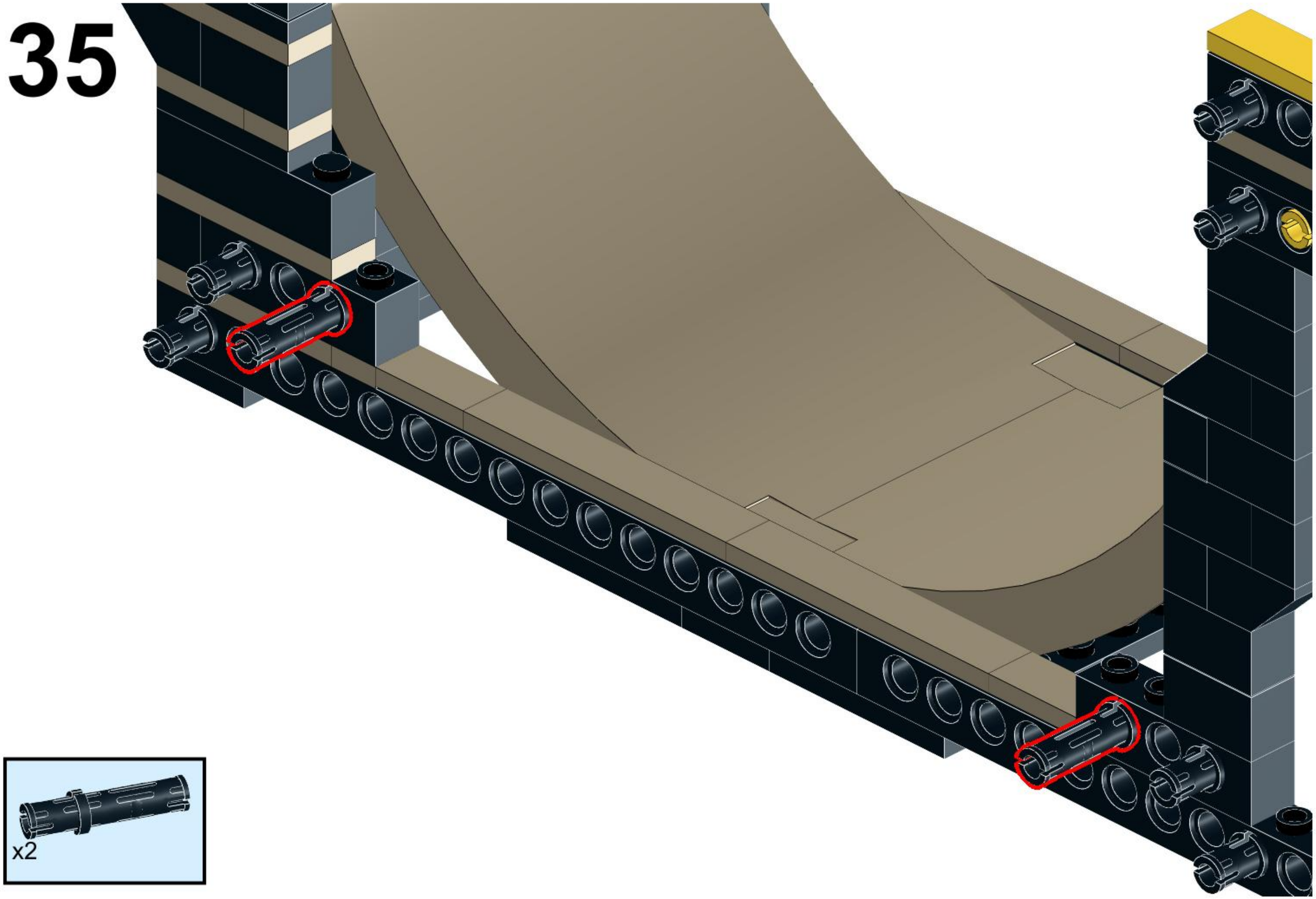

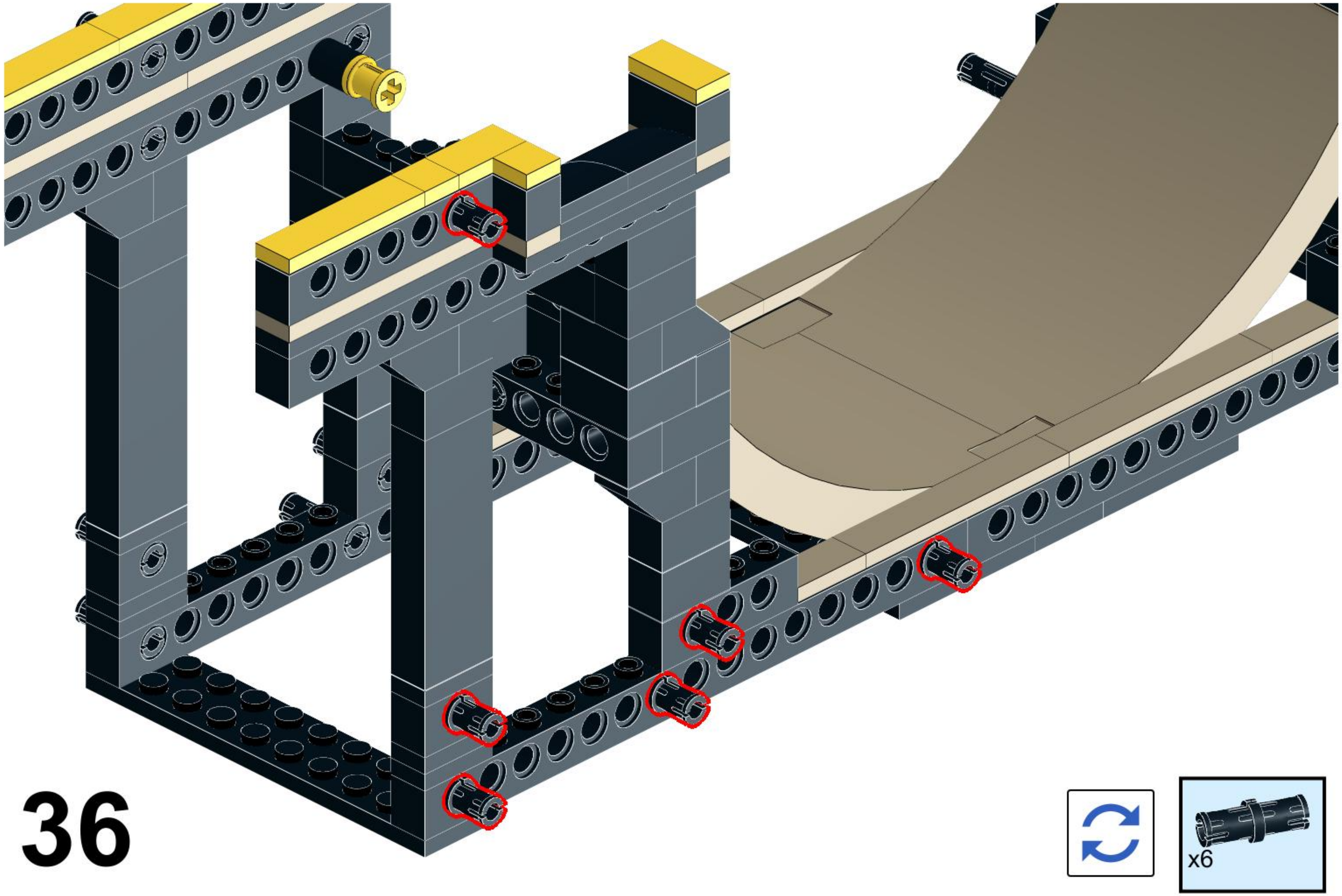
x6

37

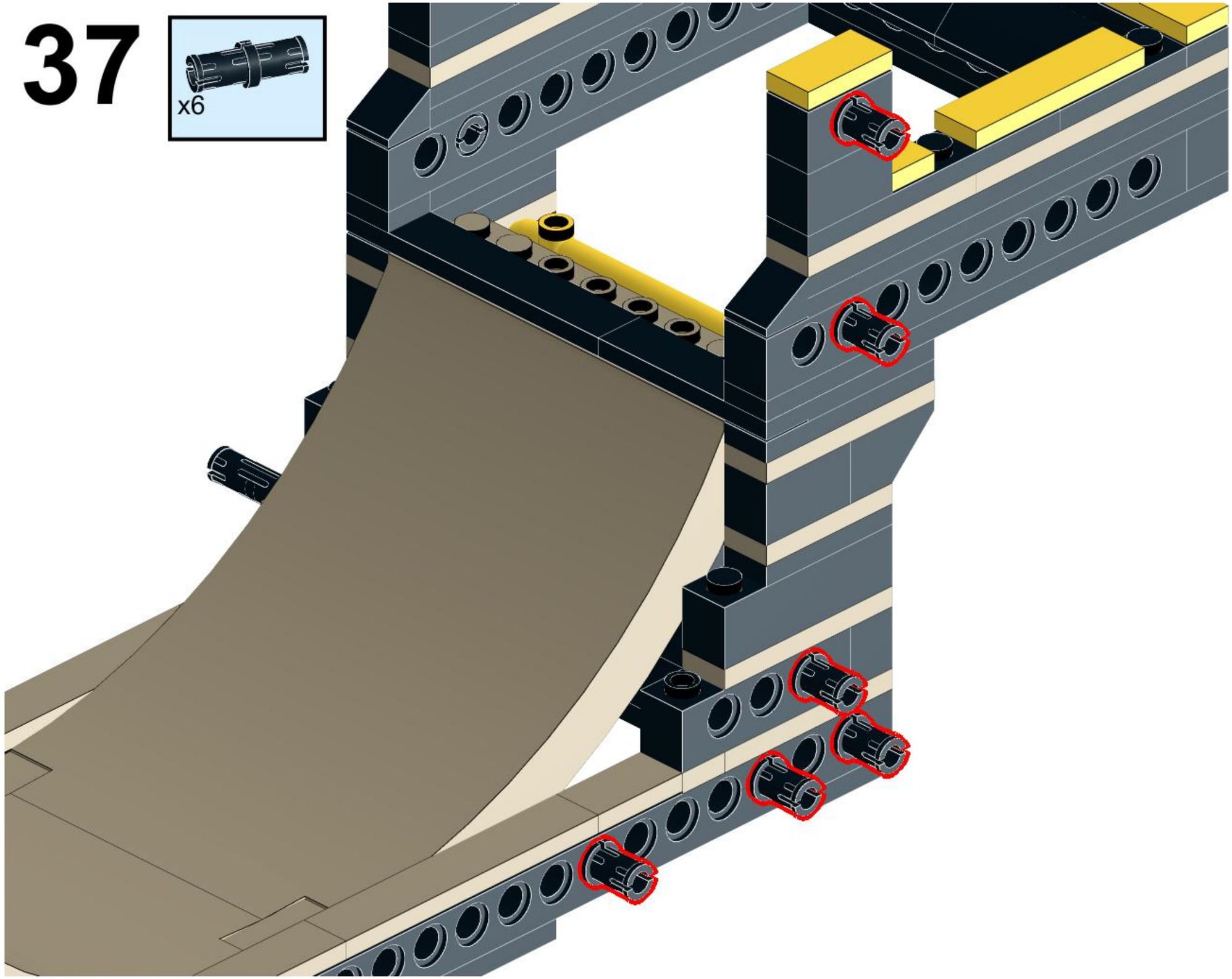

38

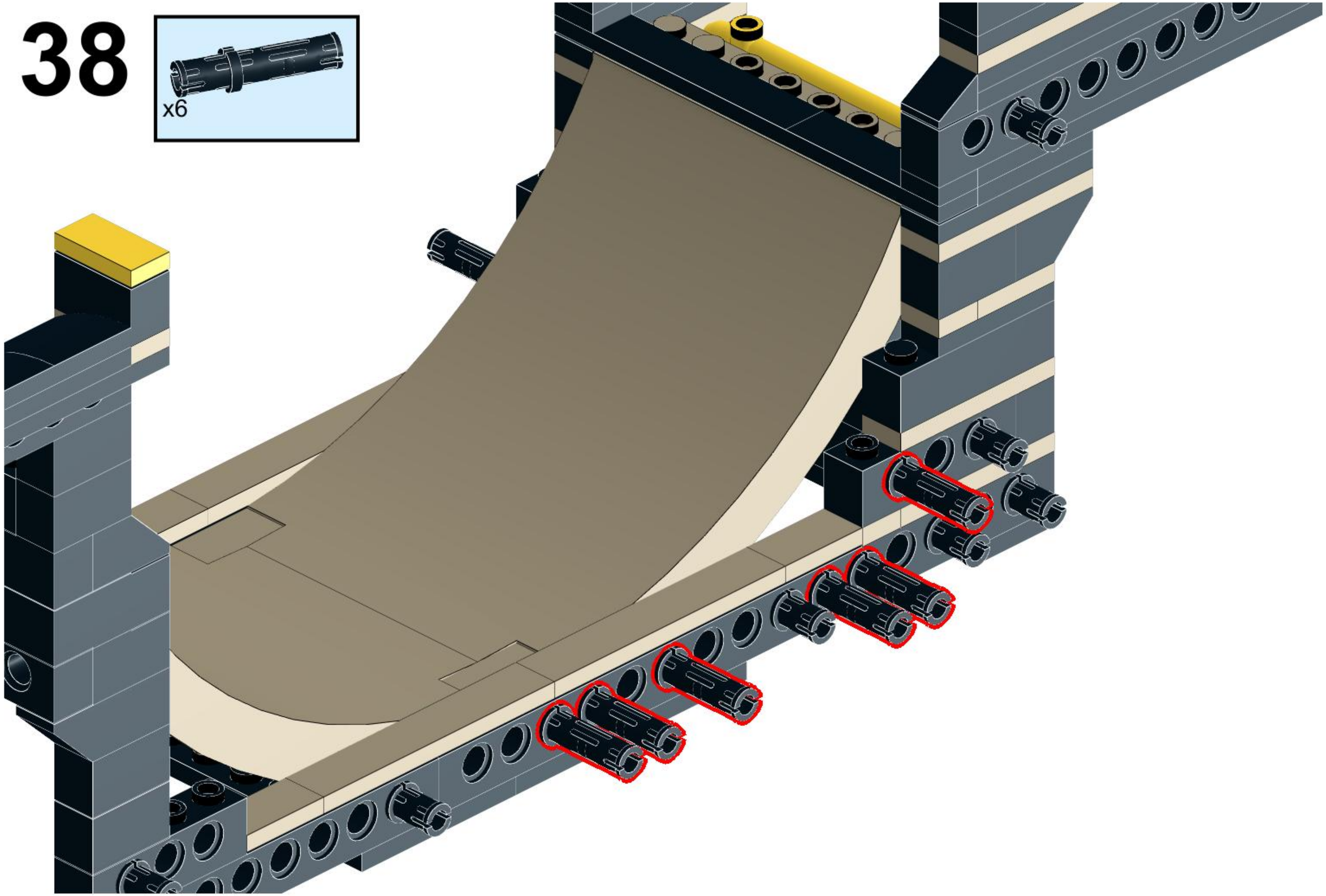

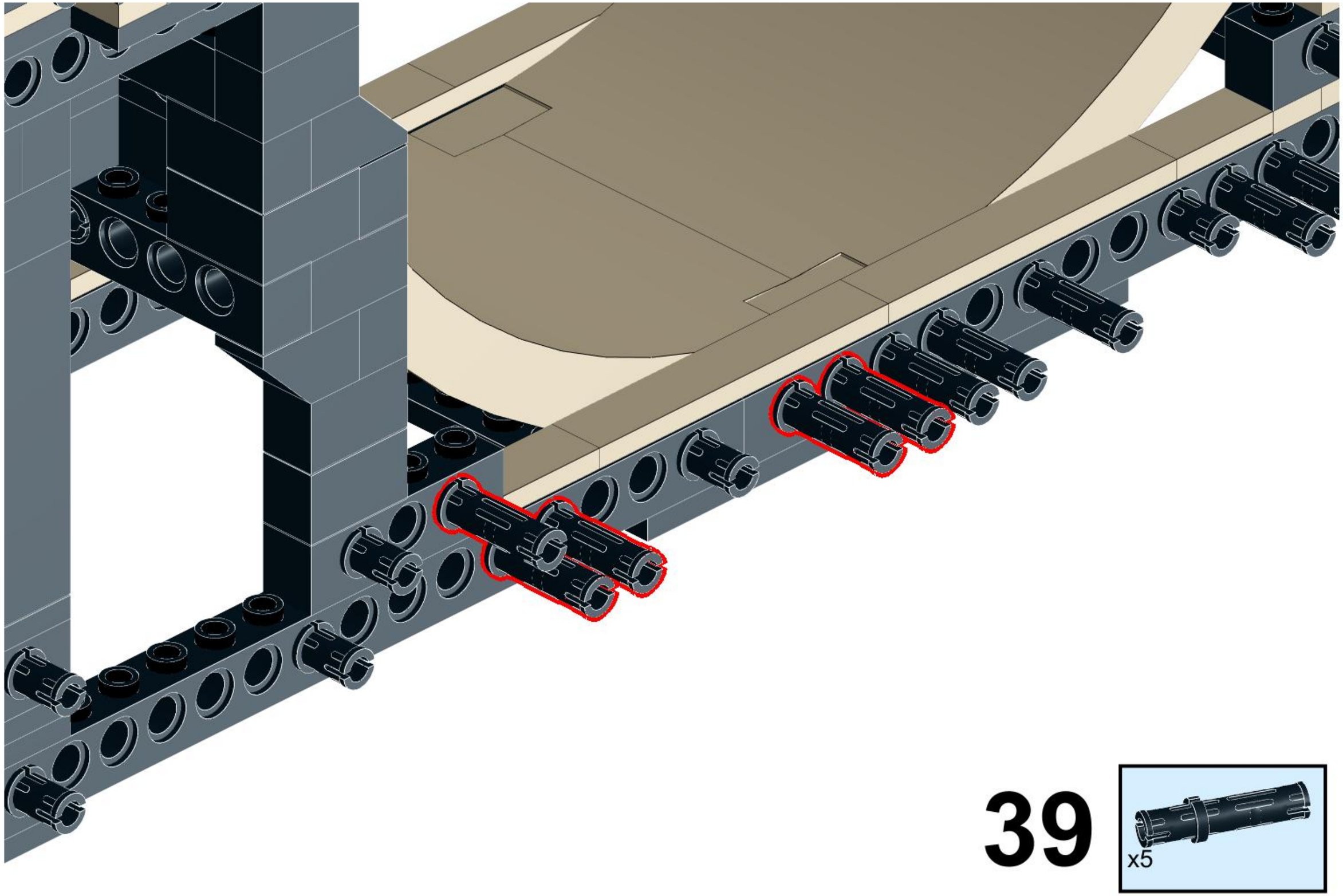
39
x5

40

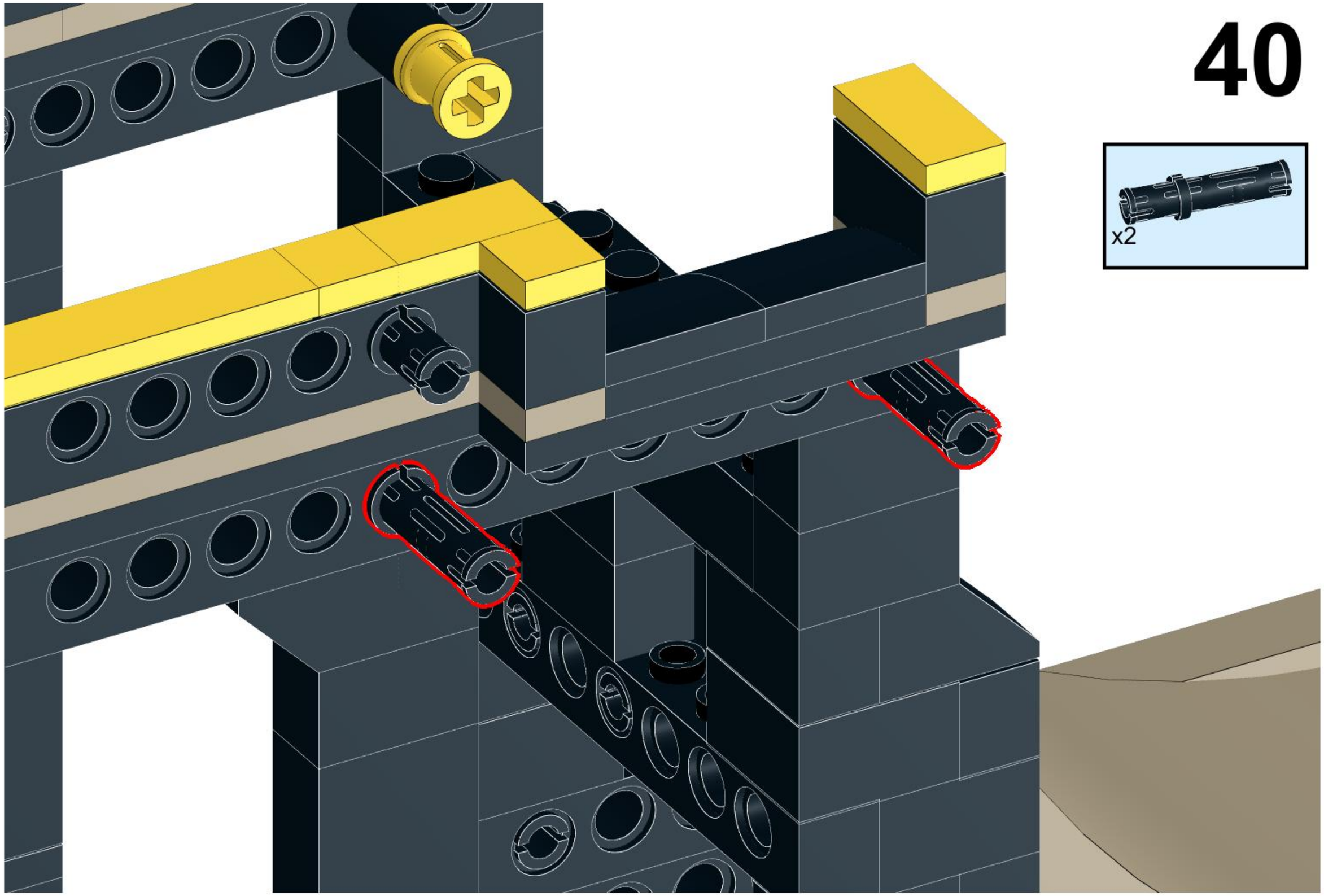

41

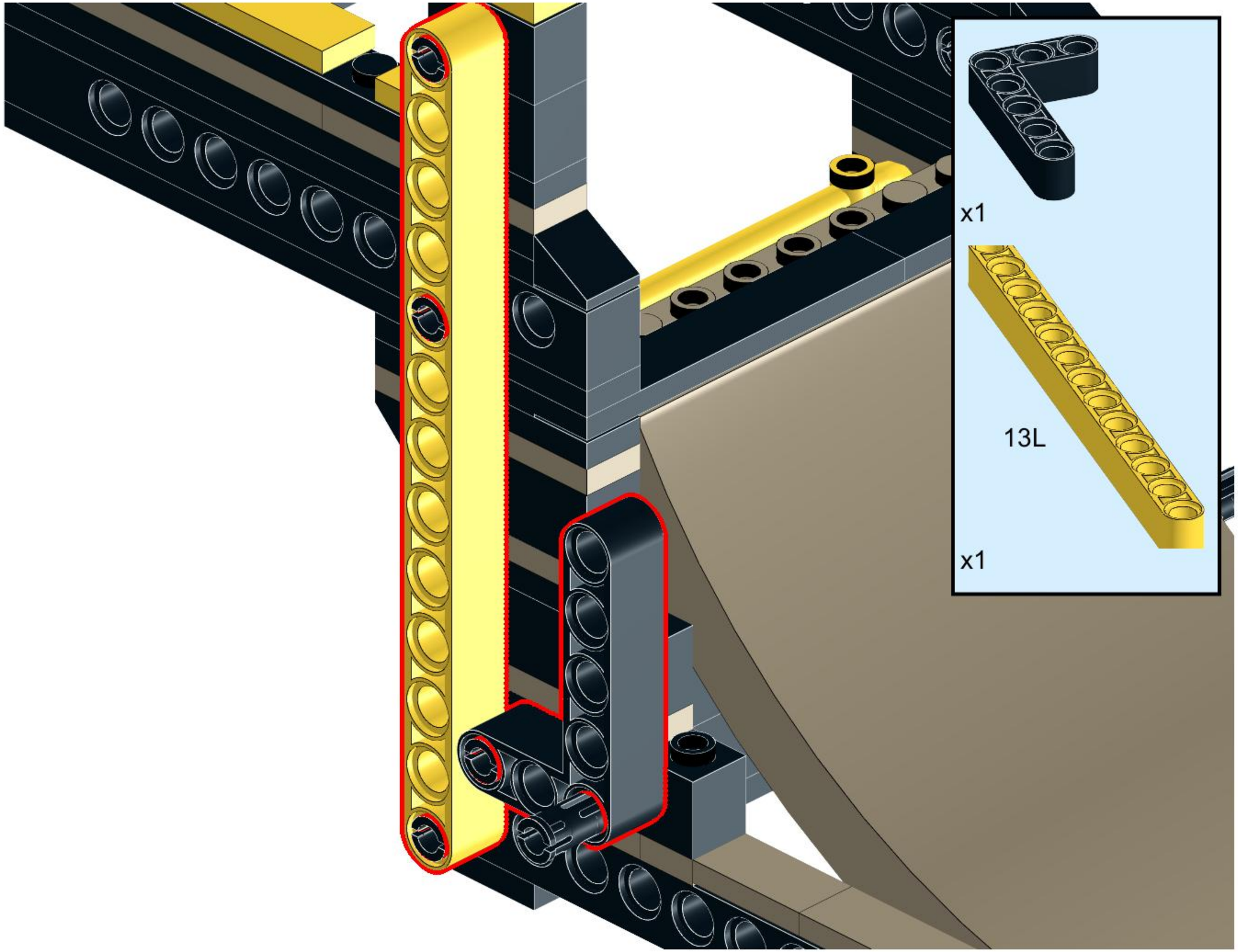

42

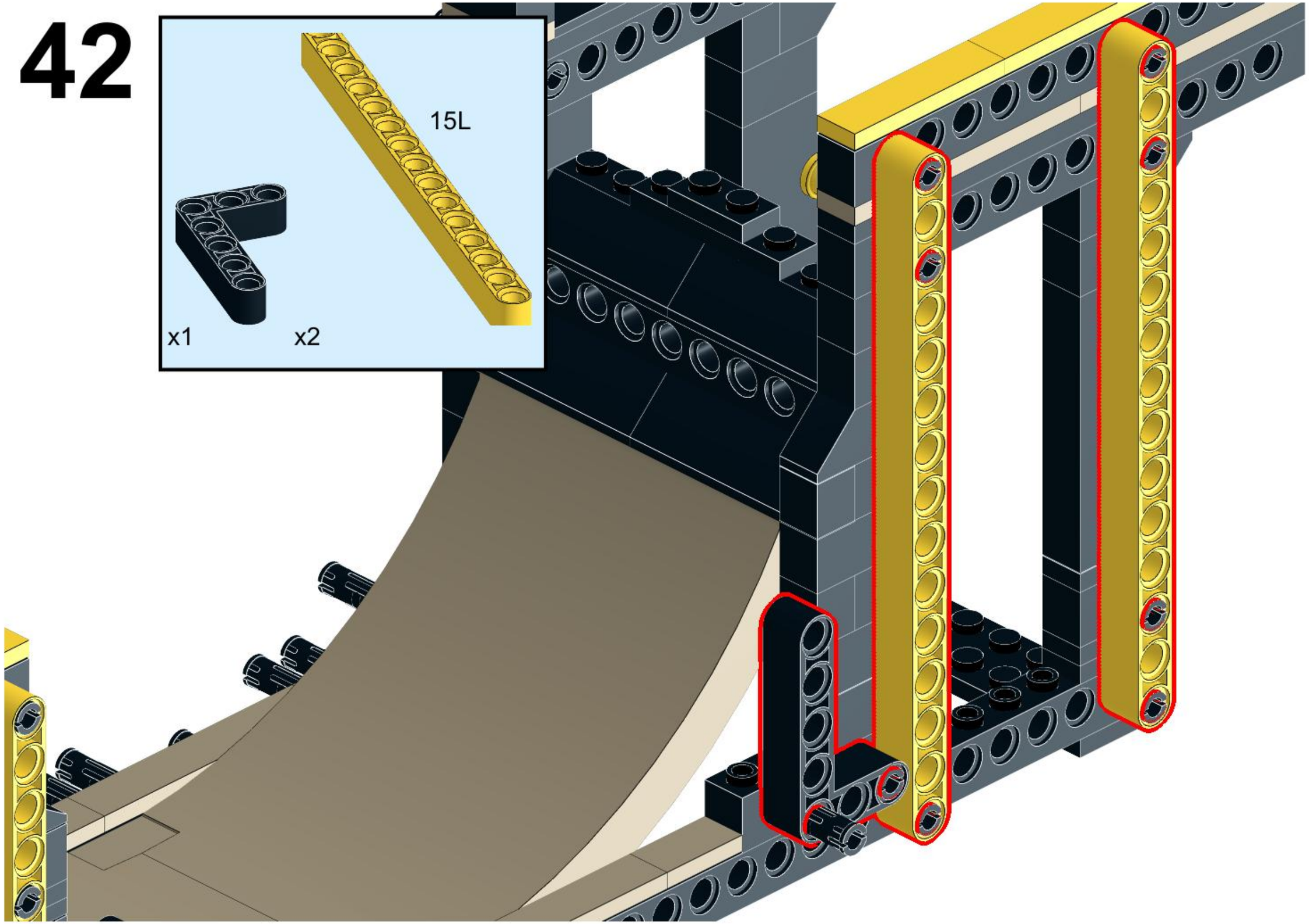

43

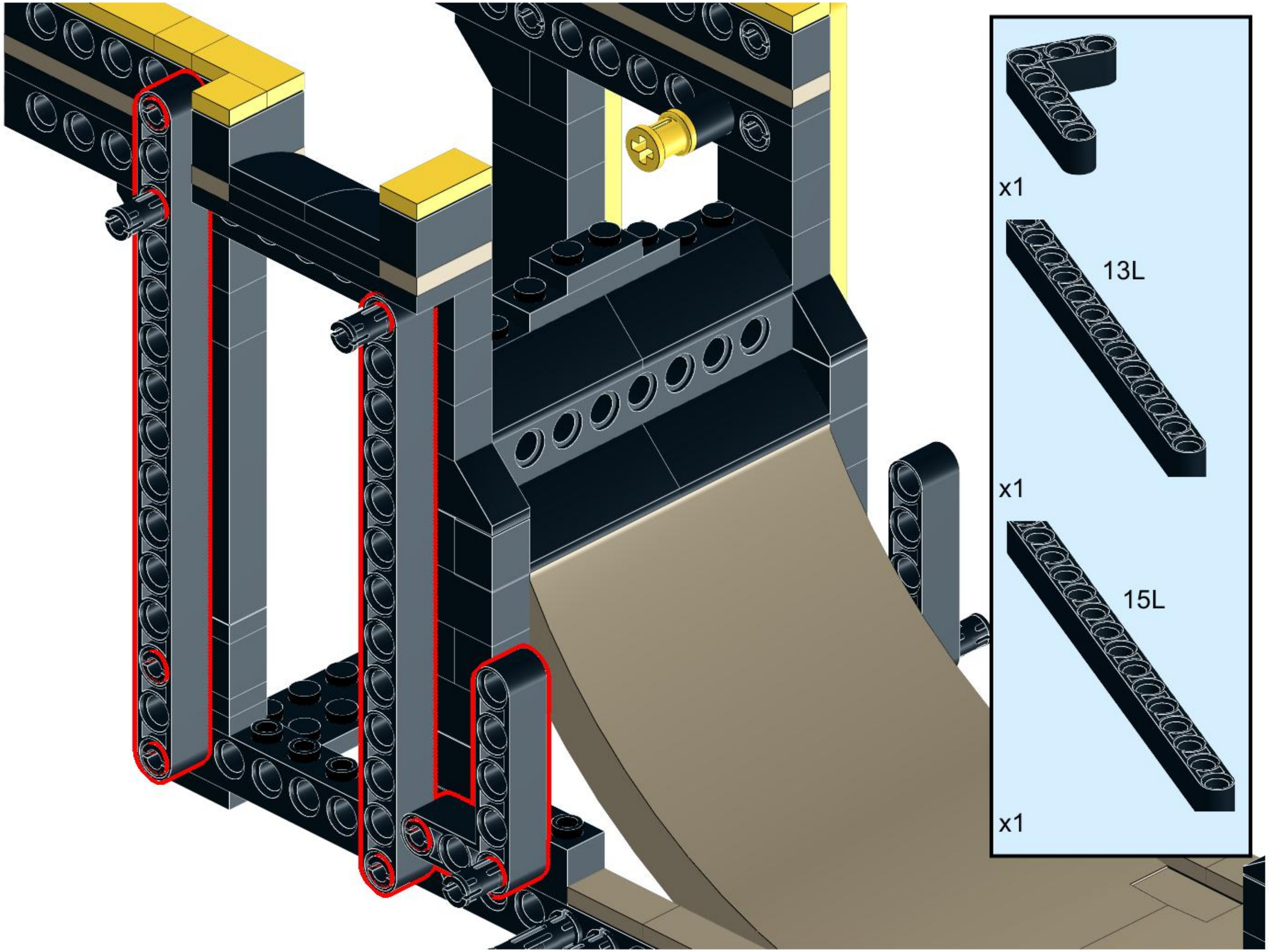

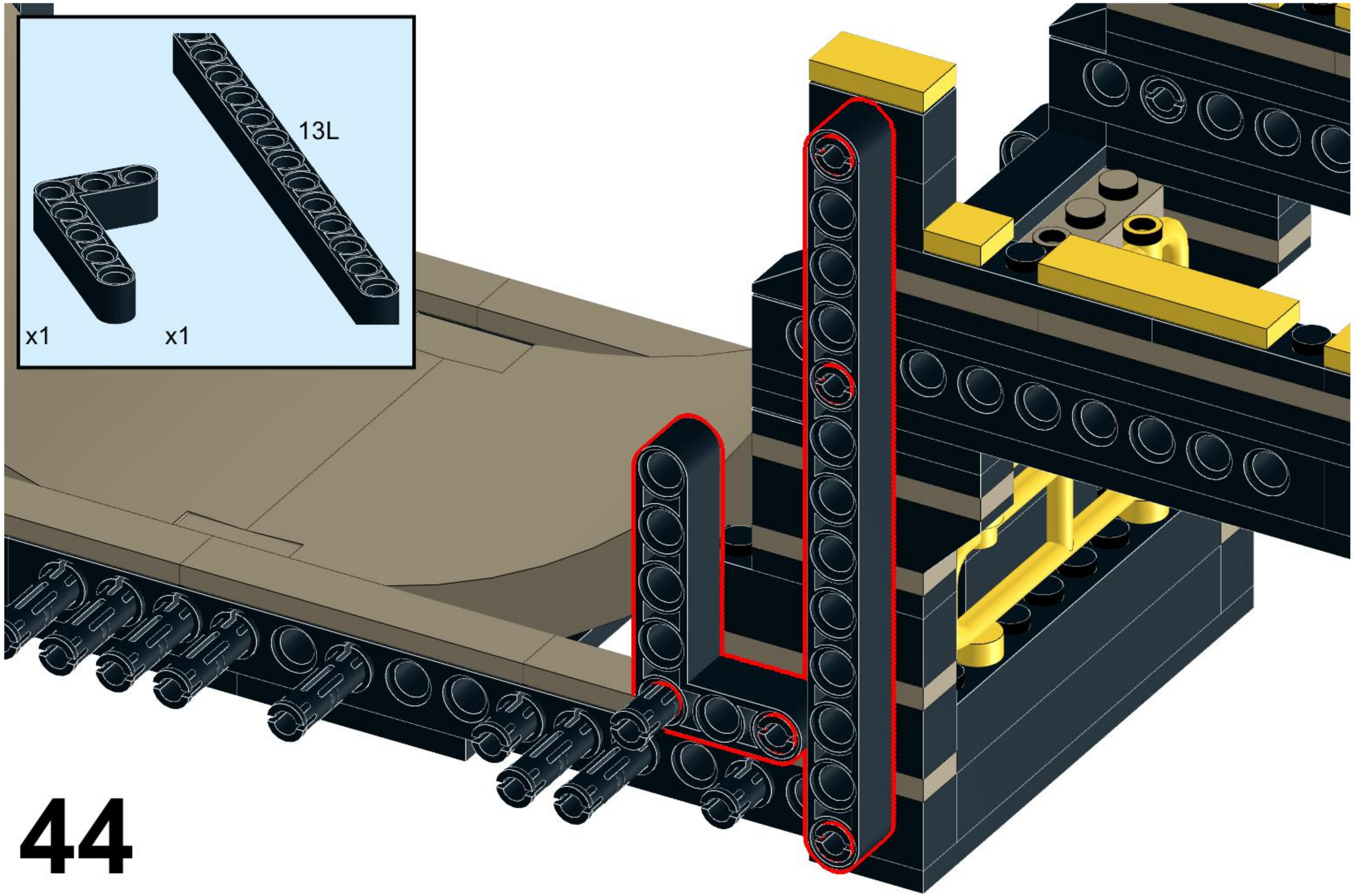
13L
x1
x1

45

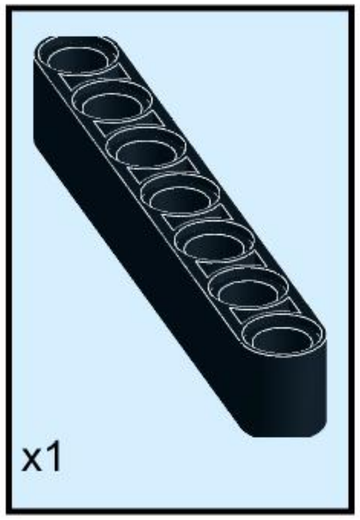

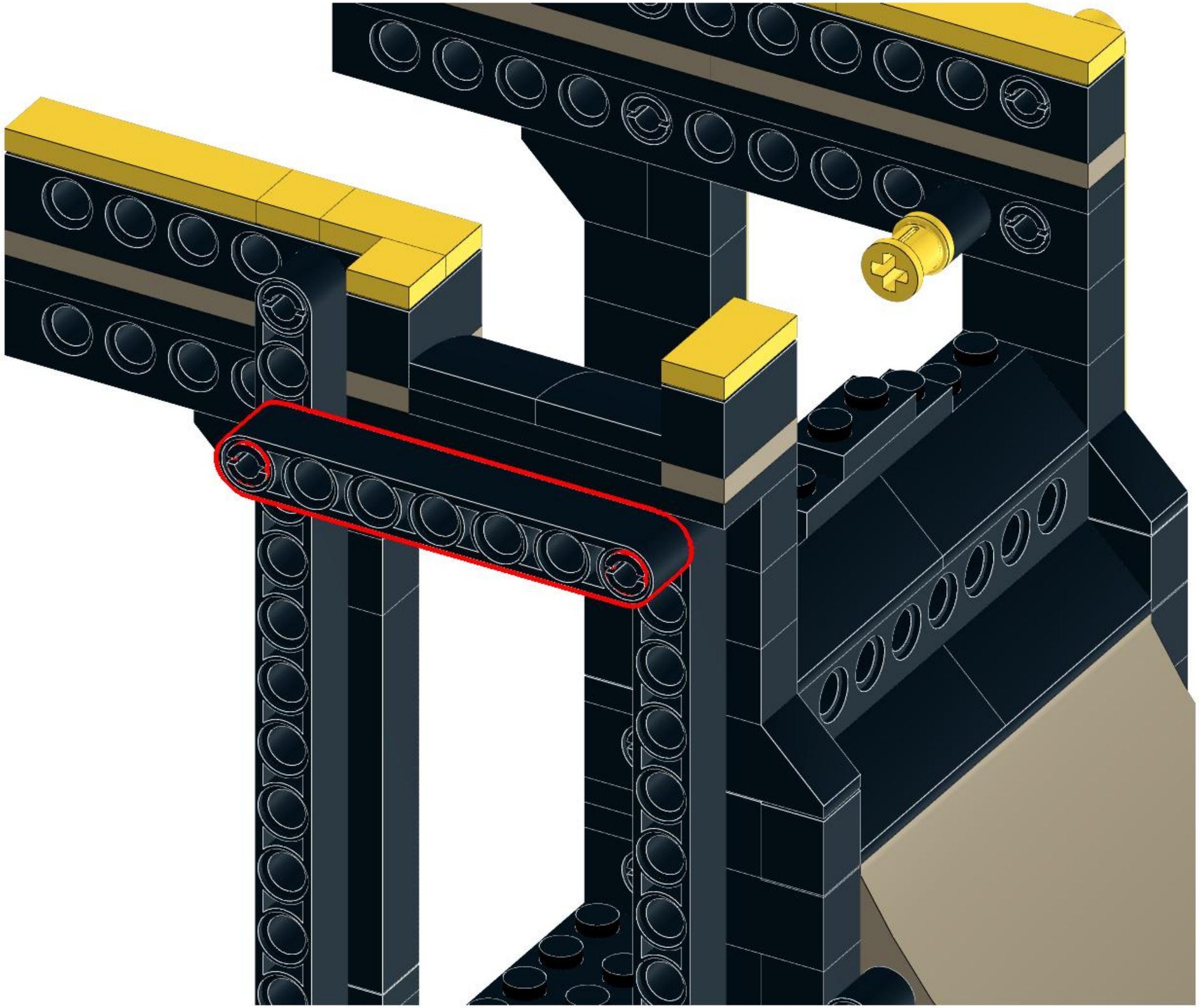

46

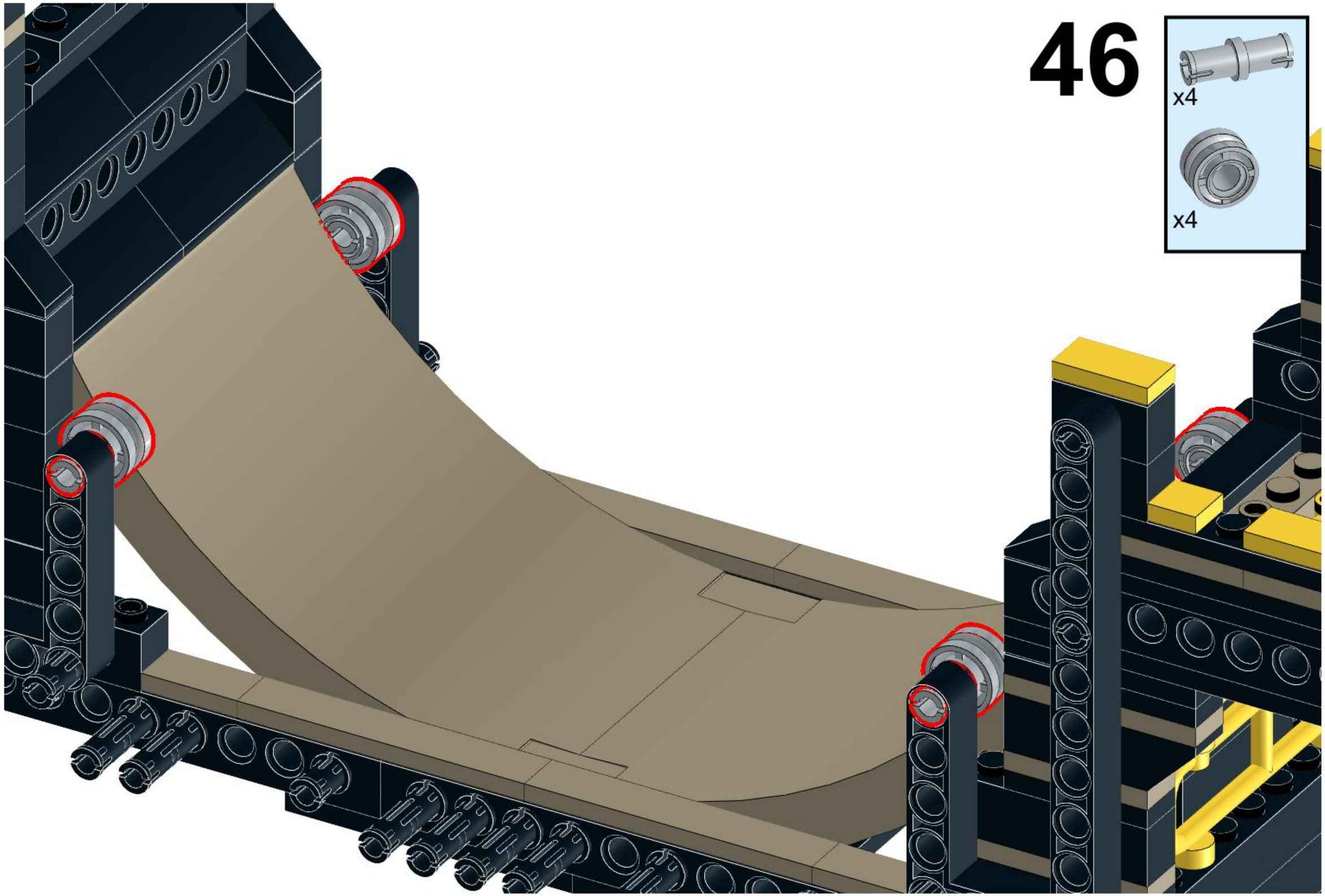

47

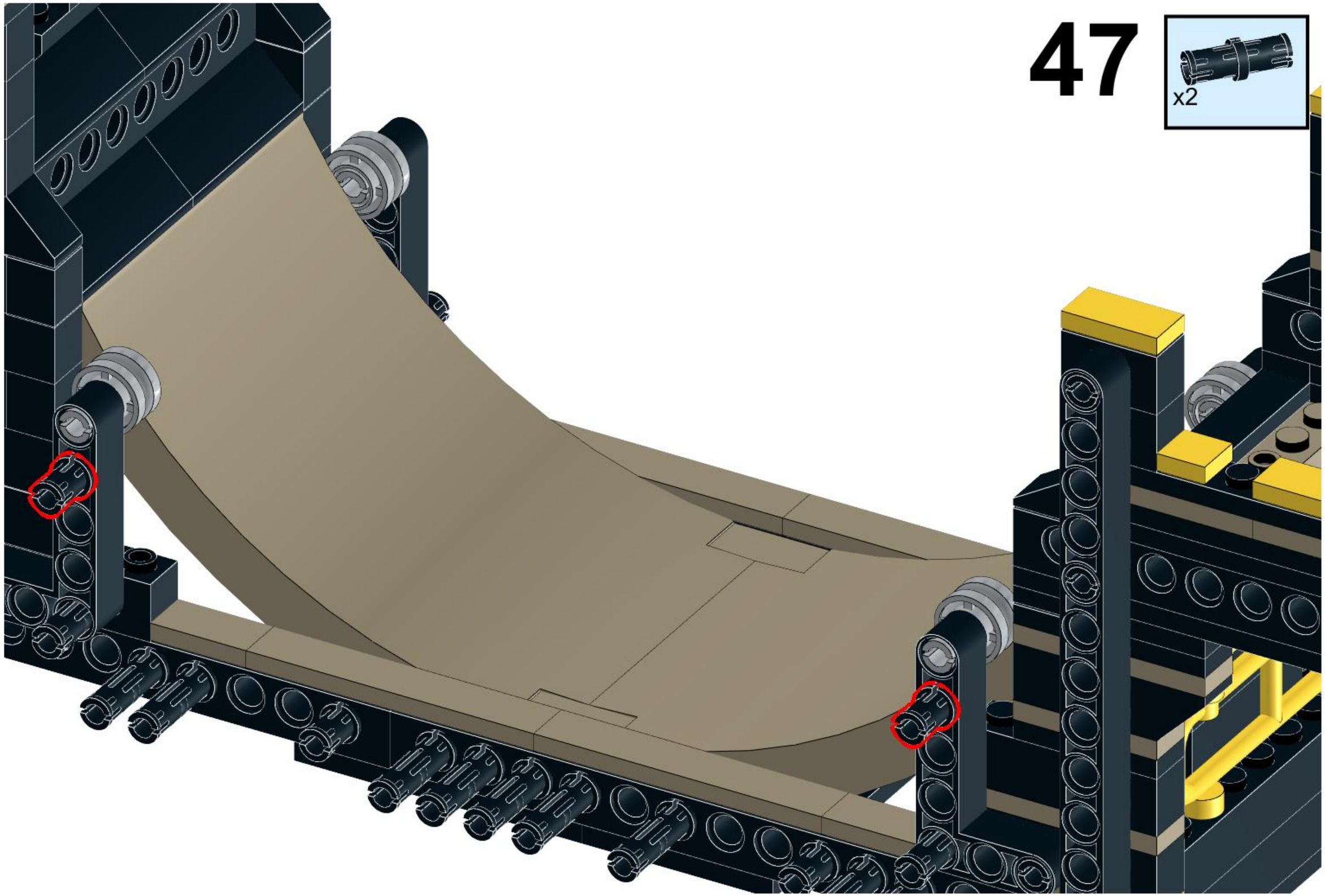

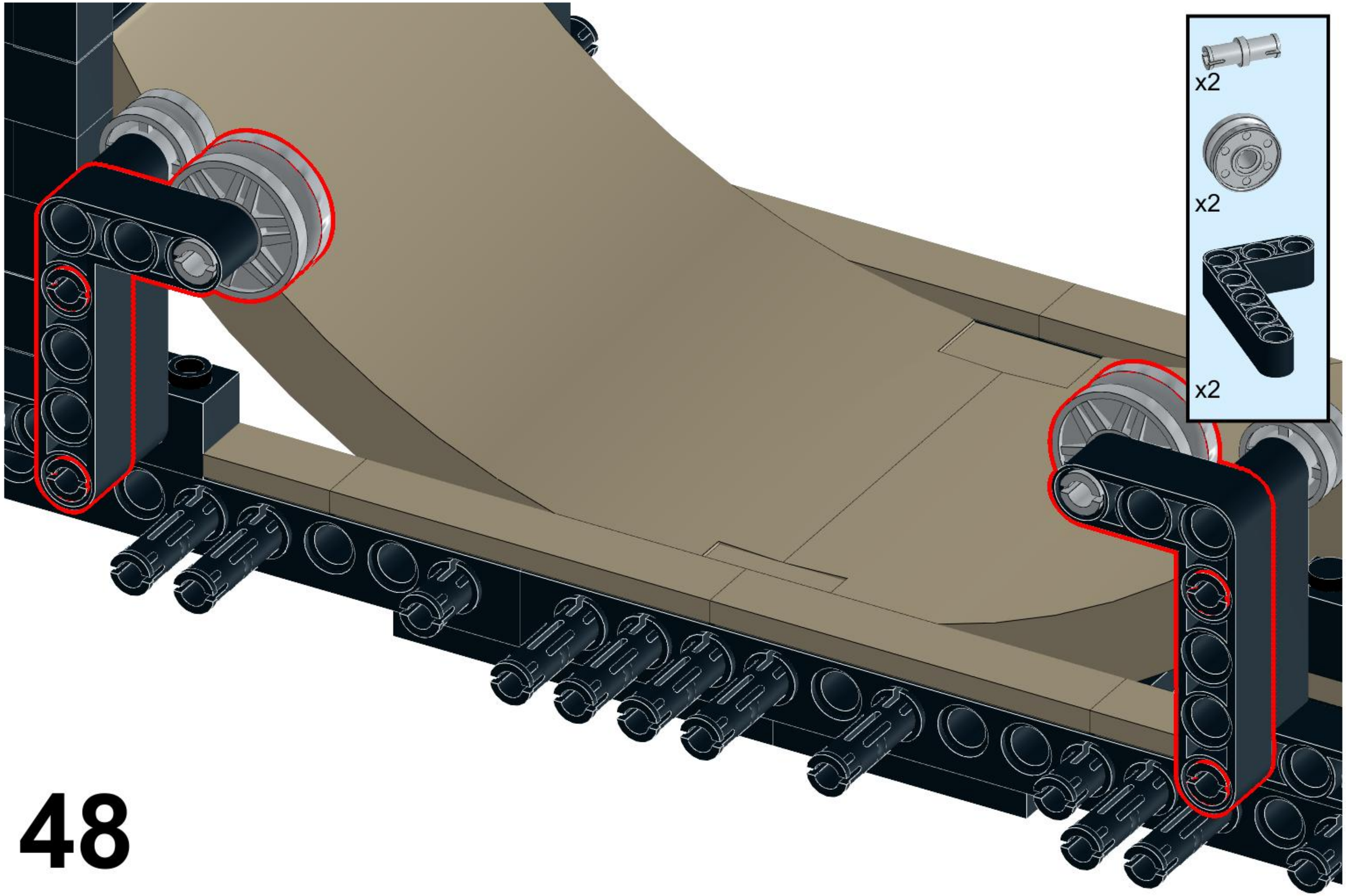

48

49

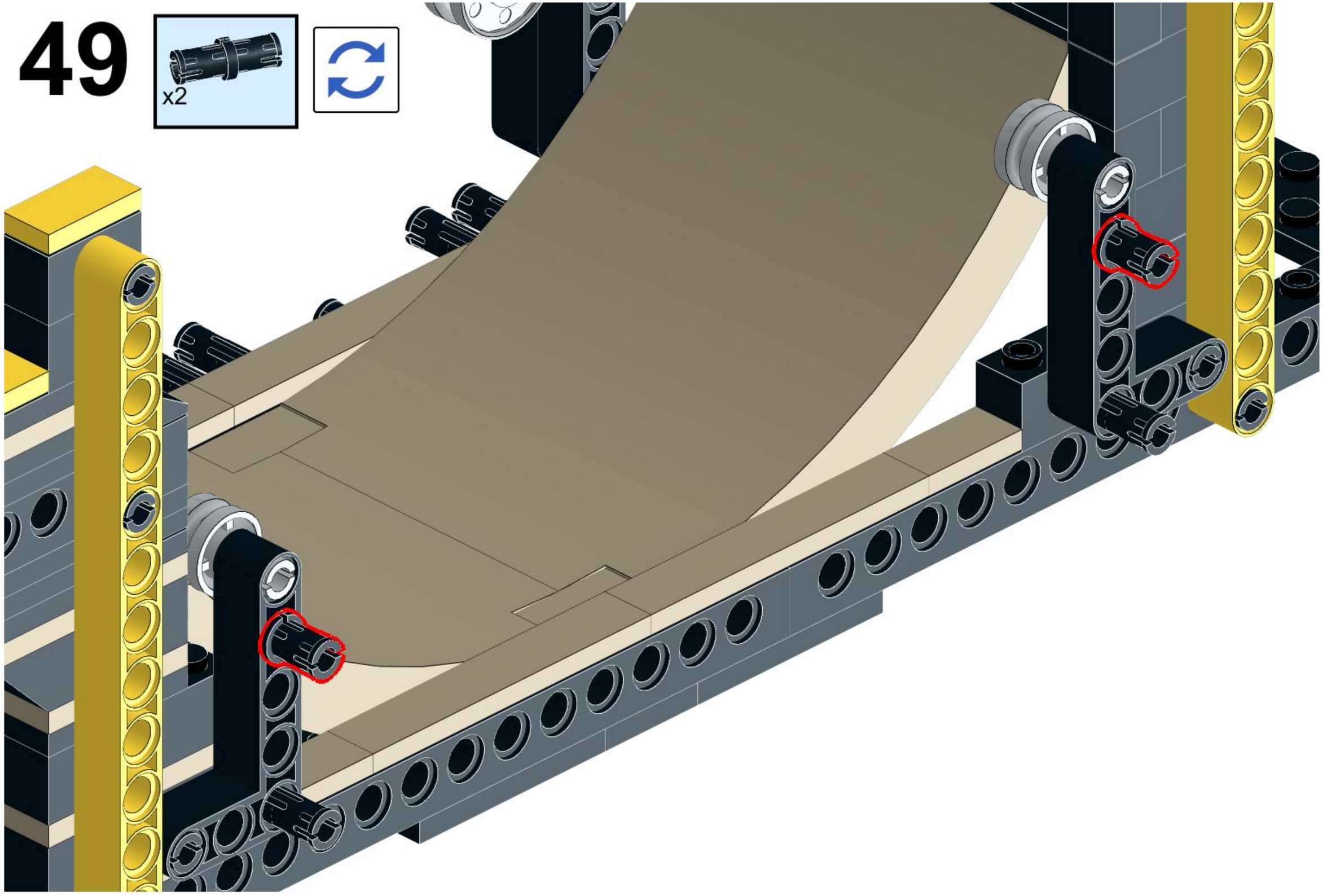

50

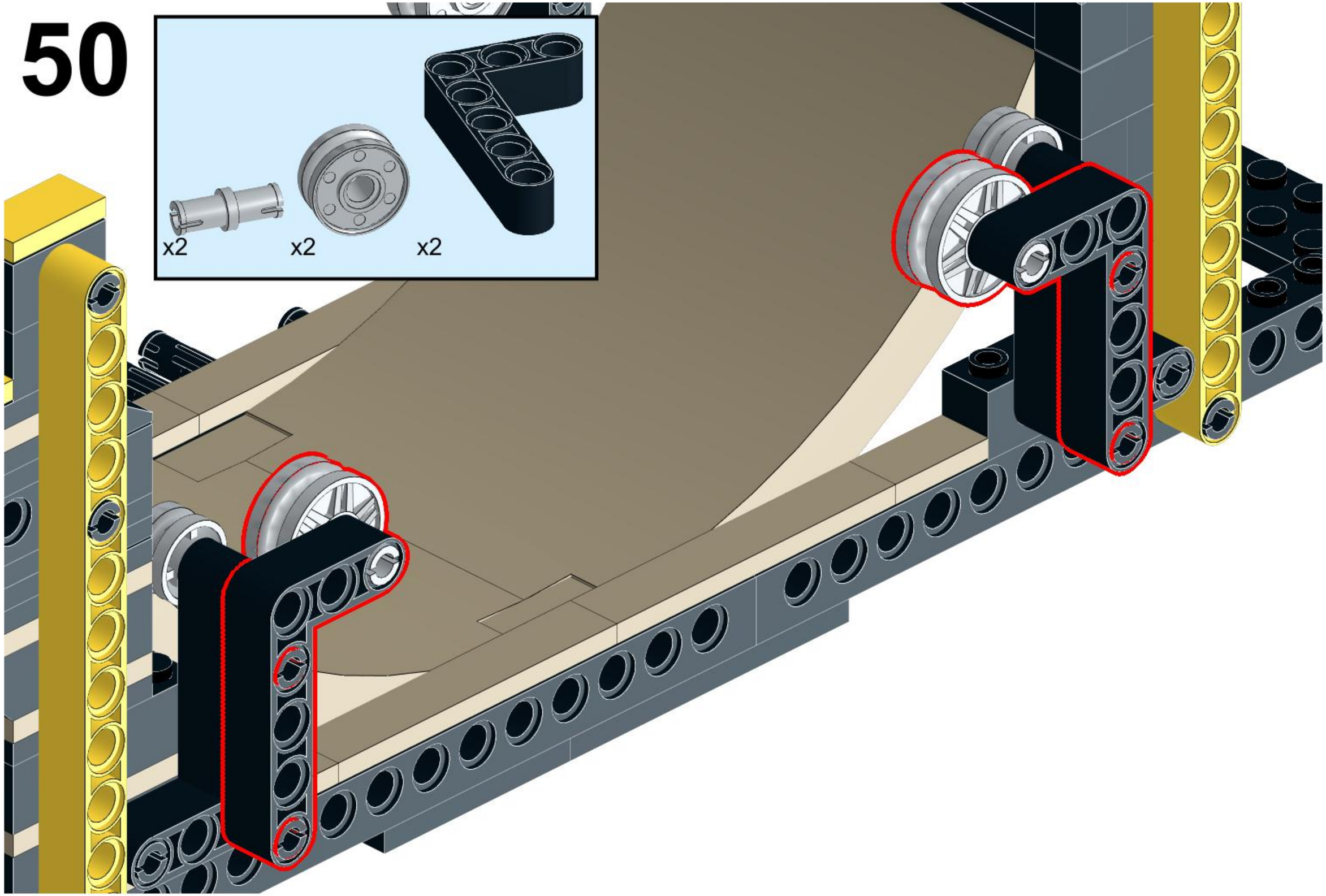

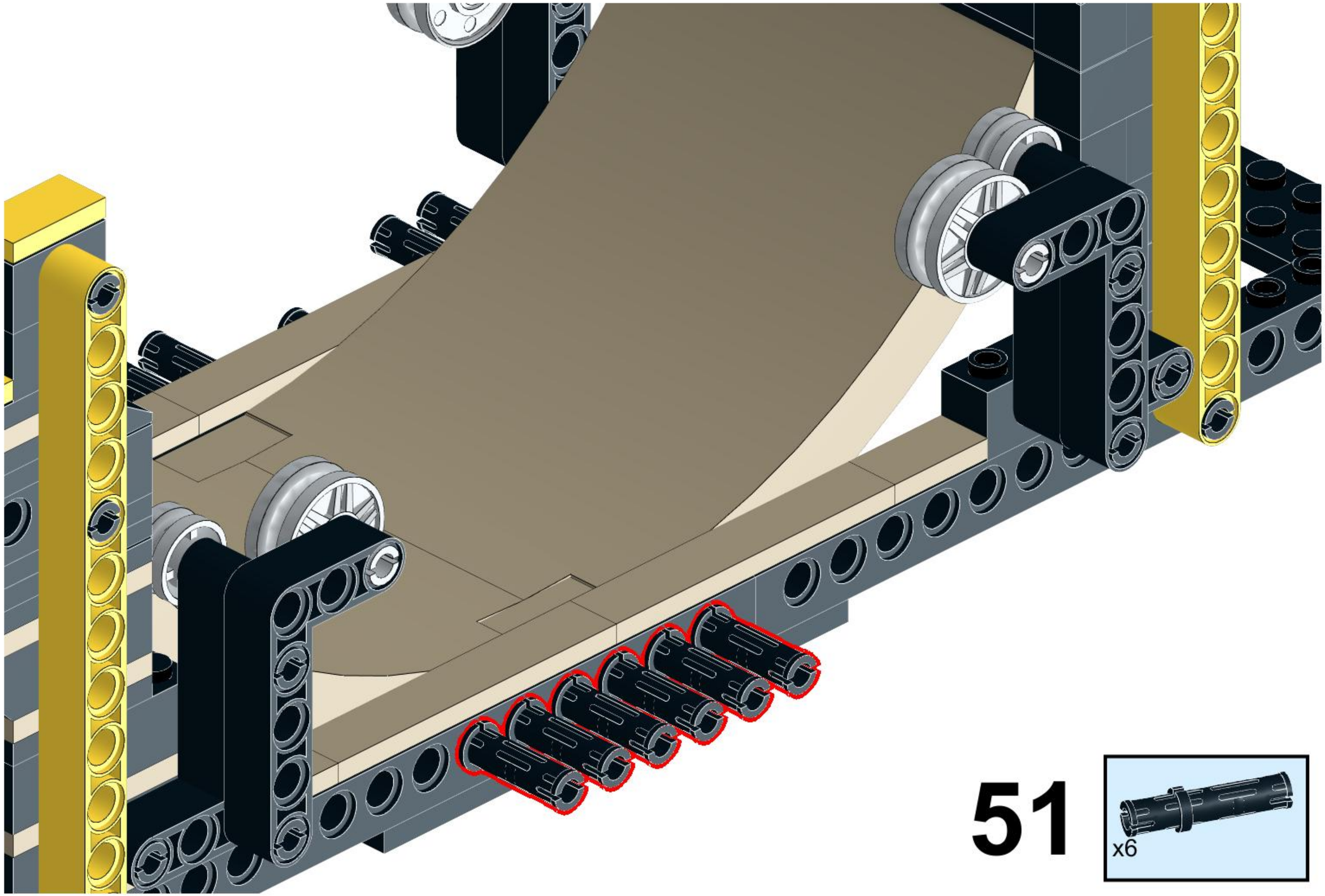

51

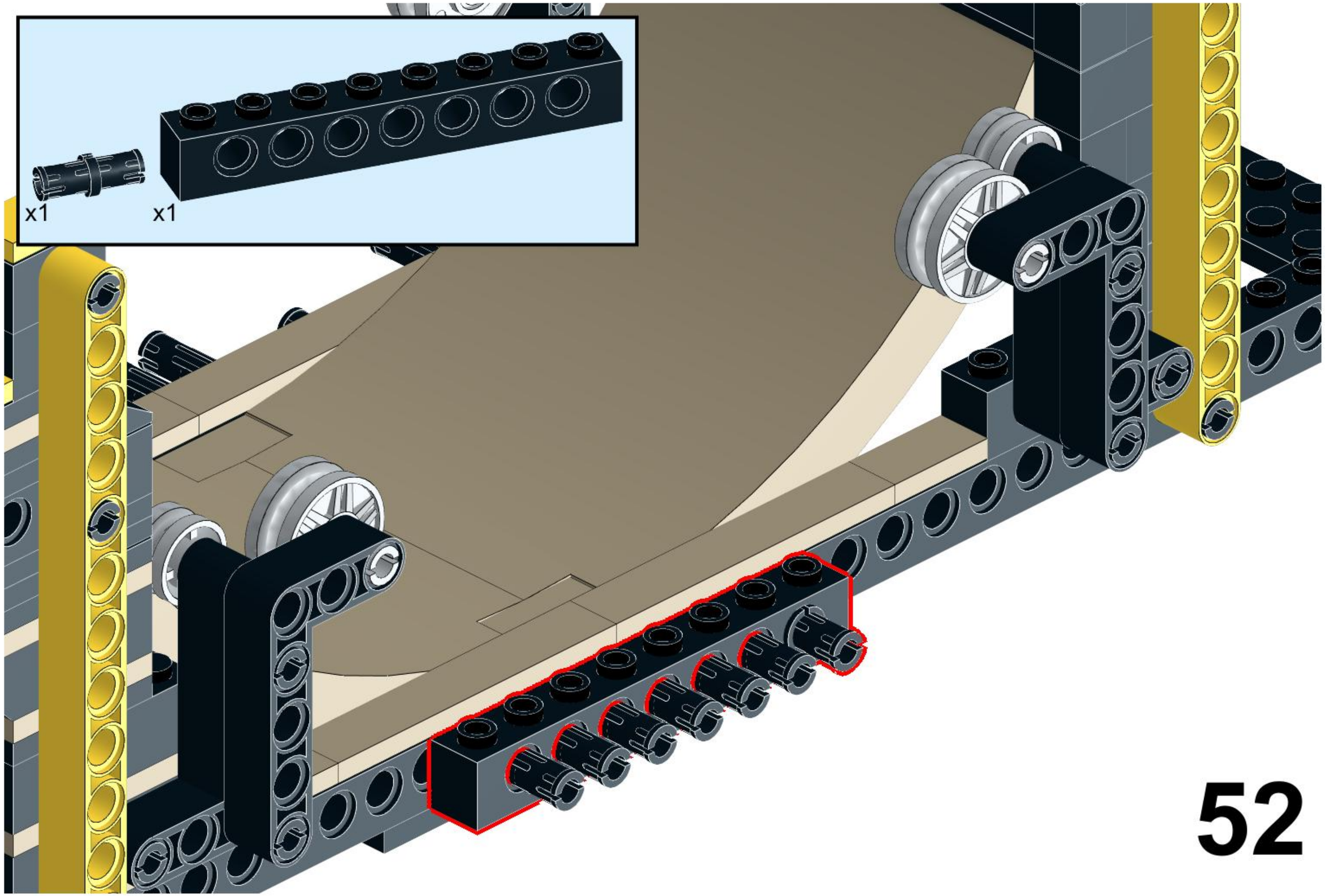
x1
x1

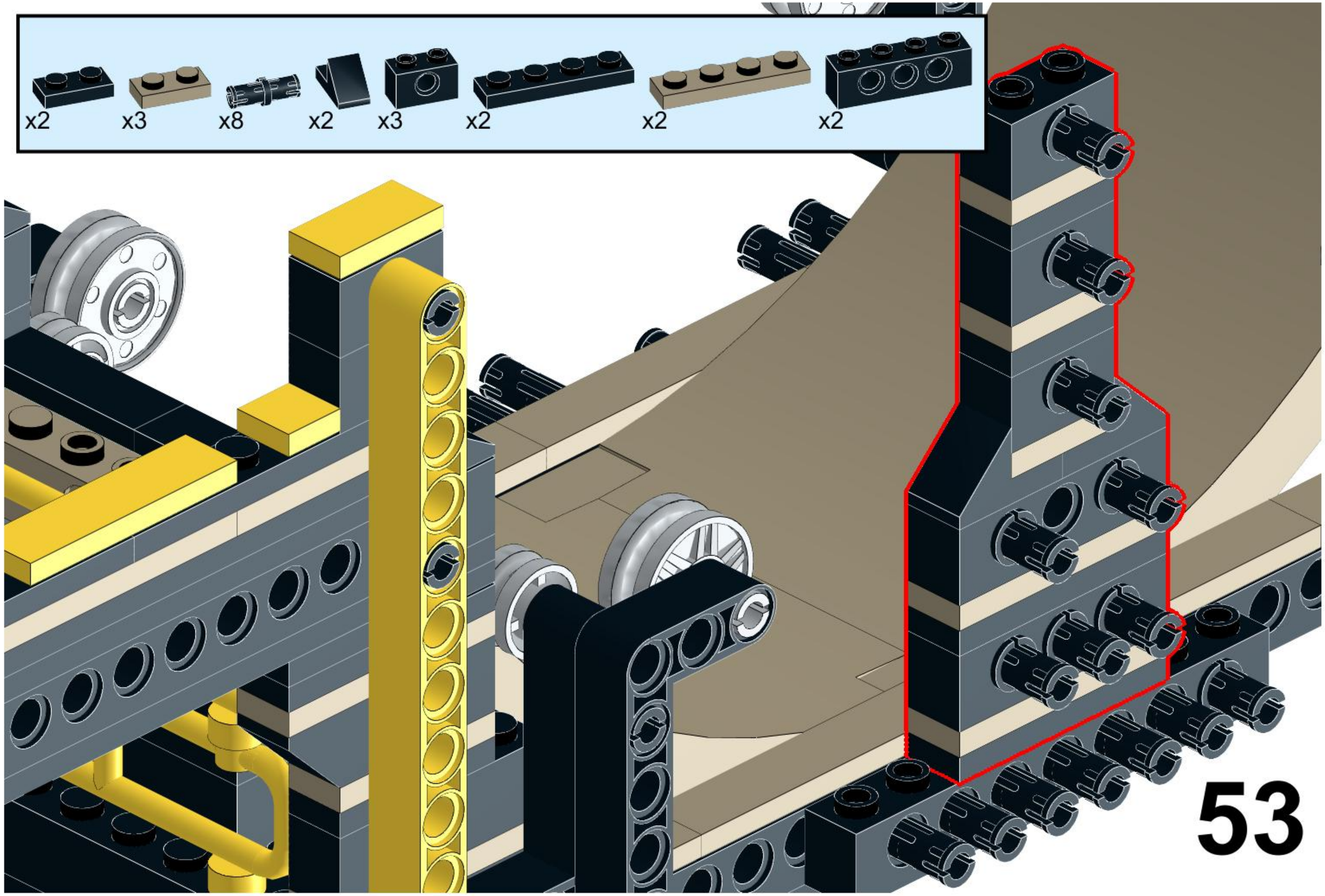
x2
x3
x8
x2
x3
x2
x2
x2
53

54

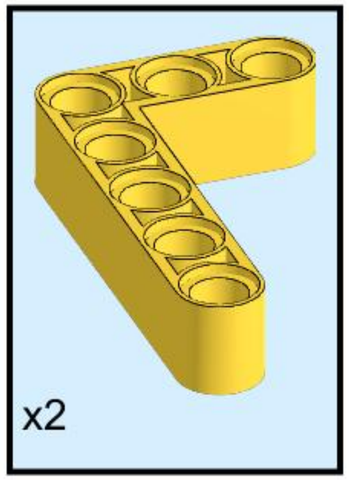

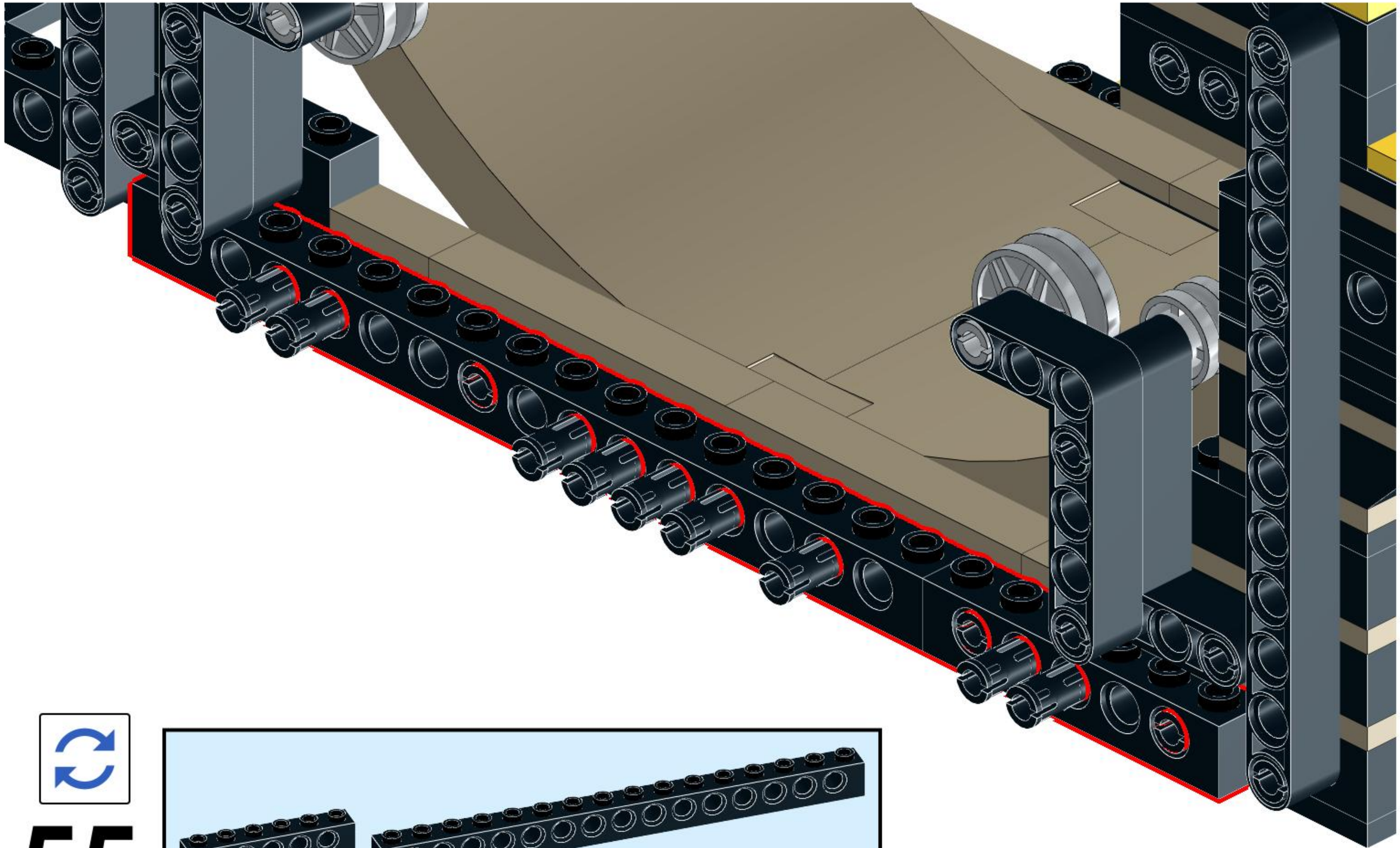

55

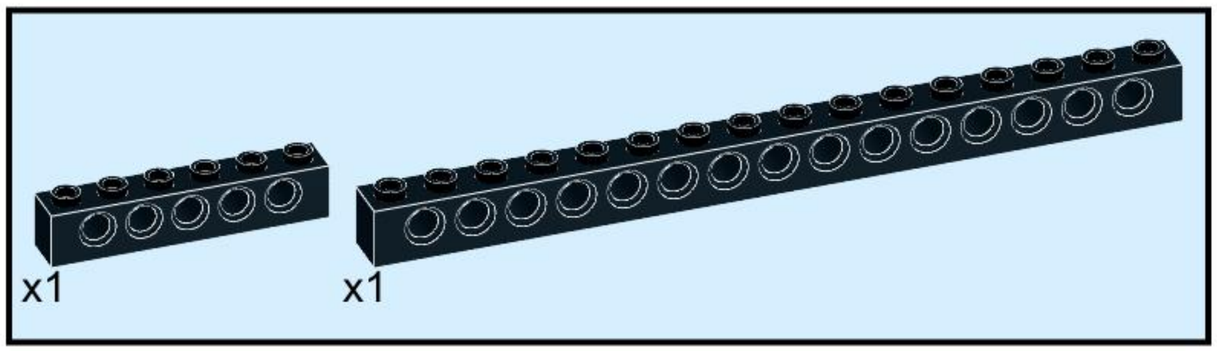

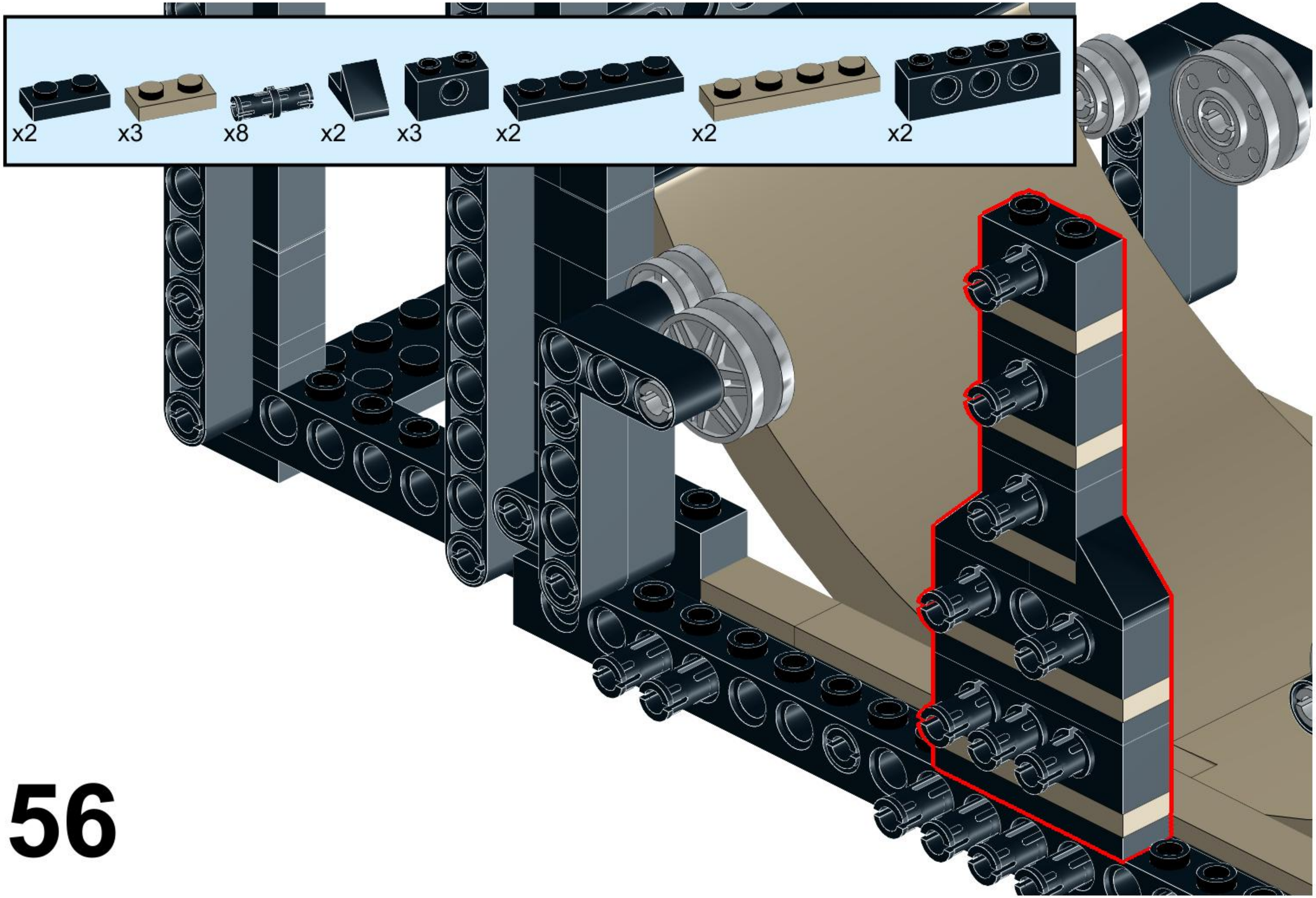
x2
x3
x8
x2
x3
x2
x2
x2

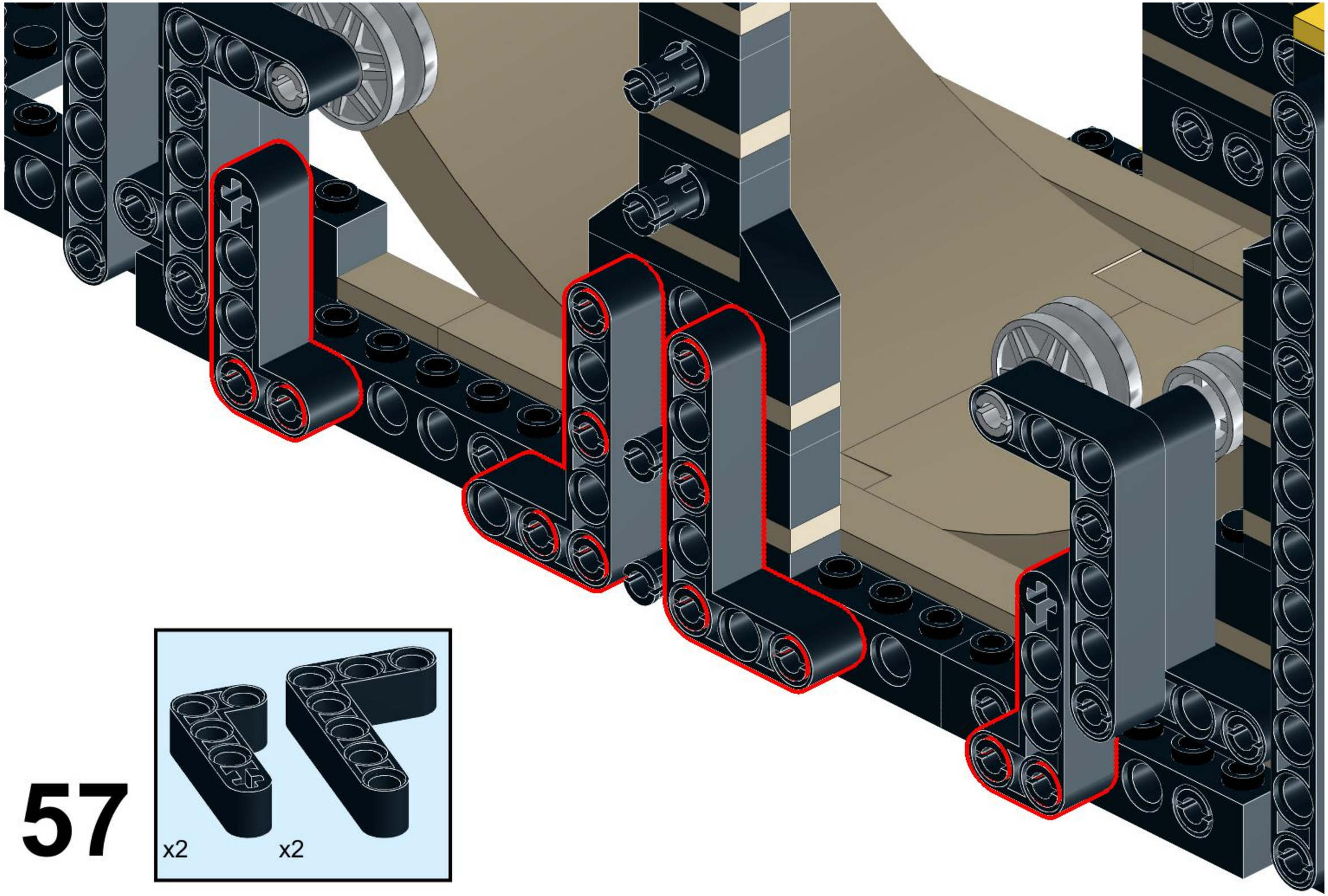

57

58

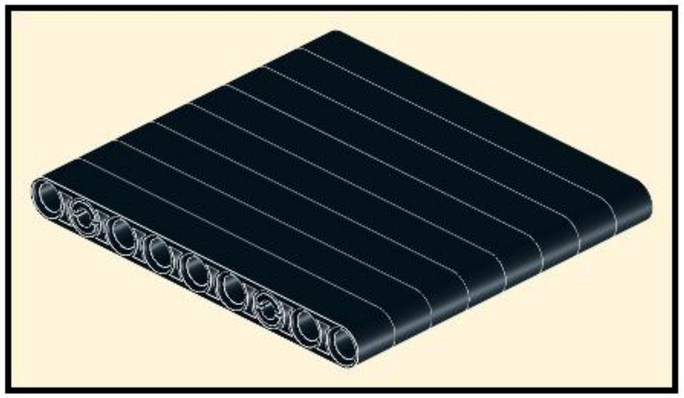

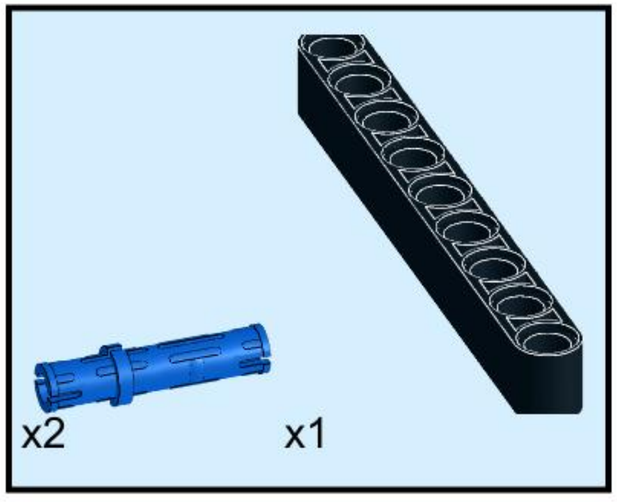

59

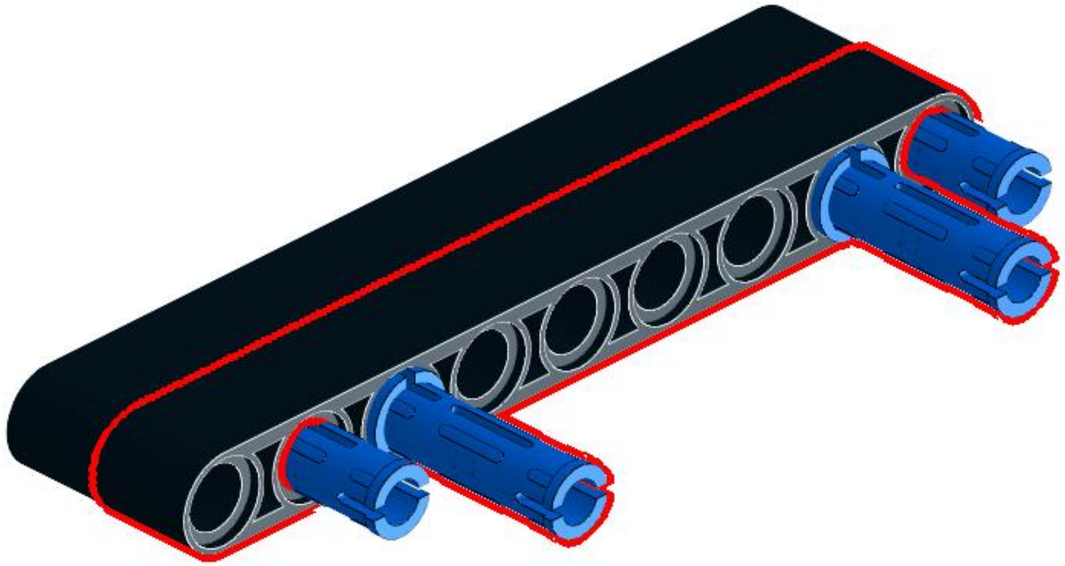

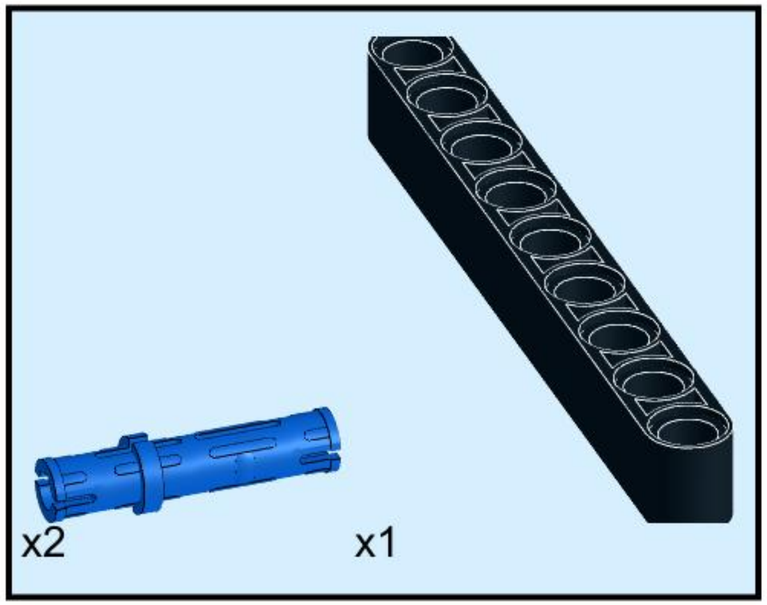

60

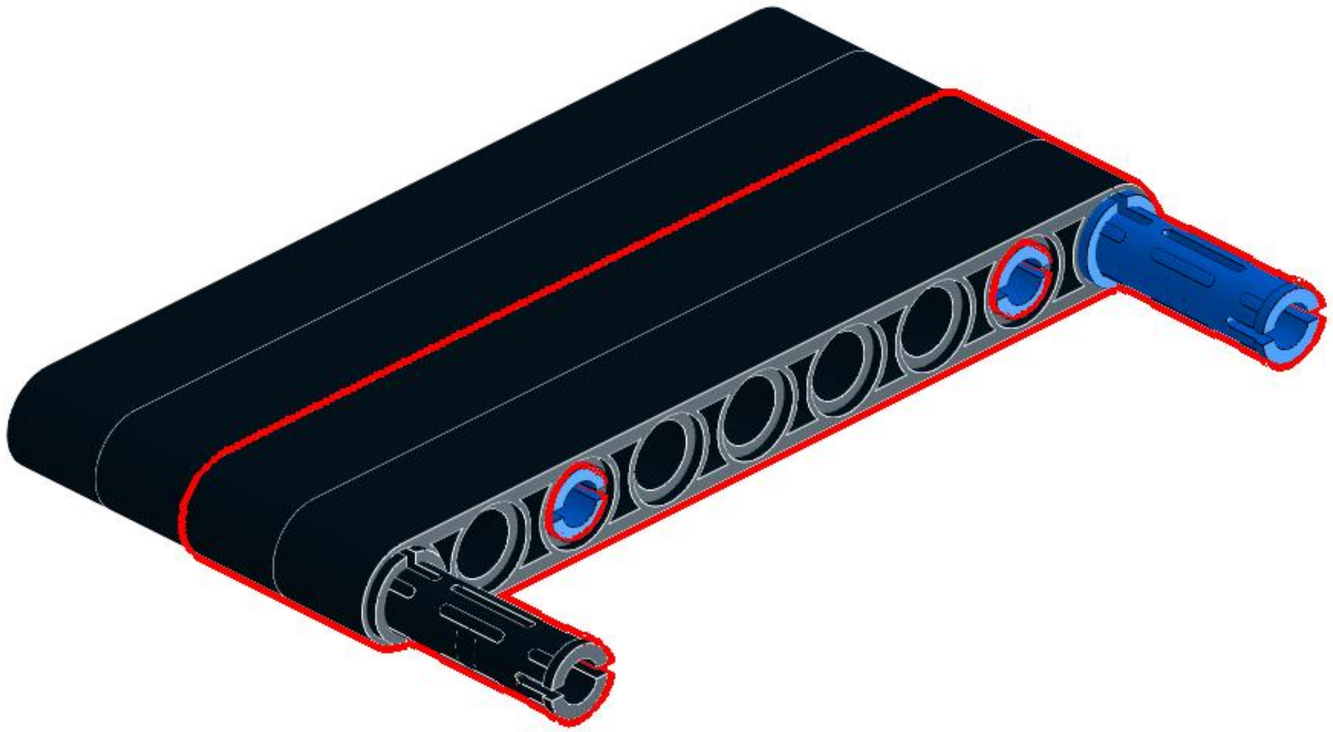

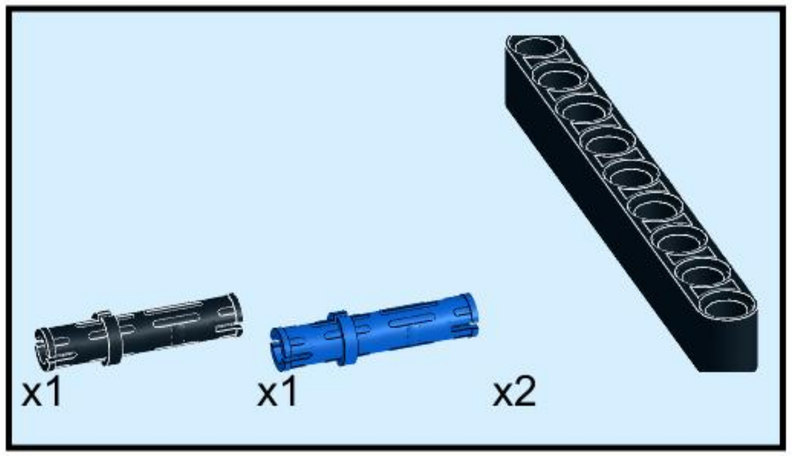

61

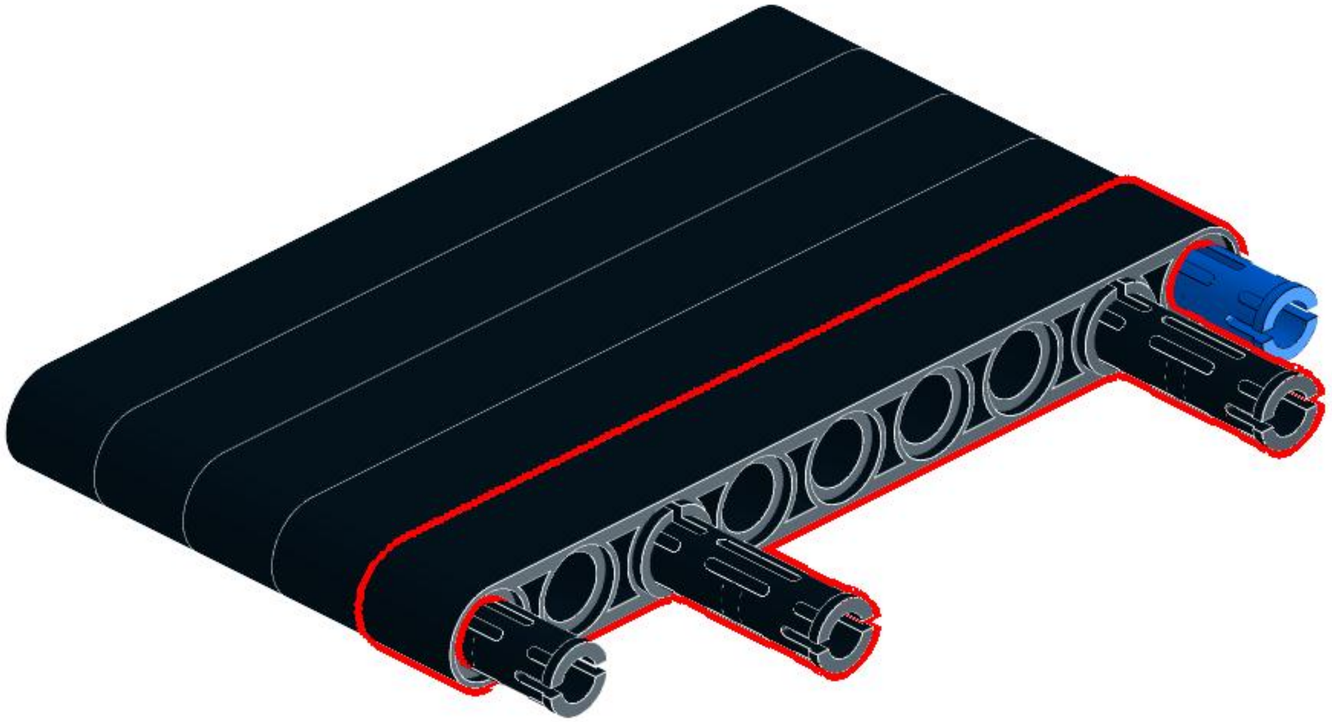

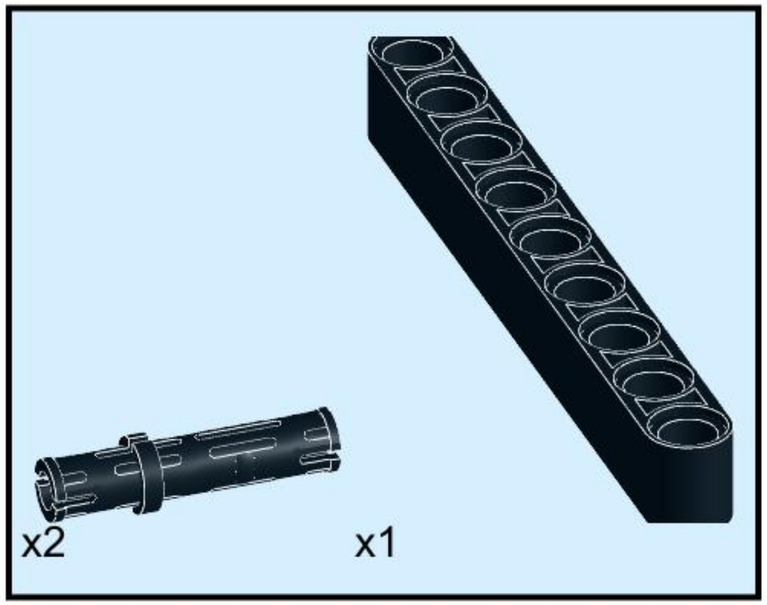

62

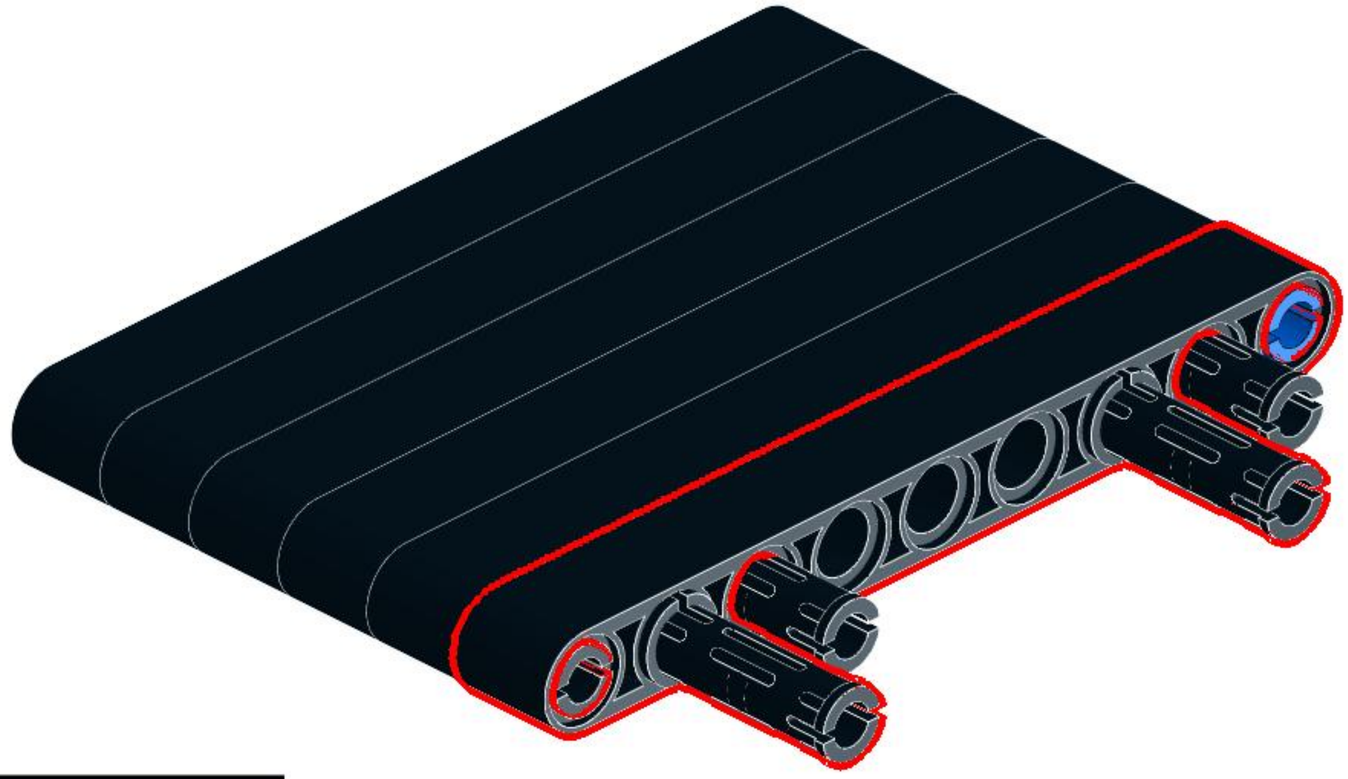

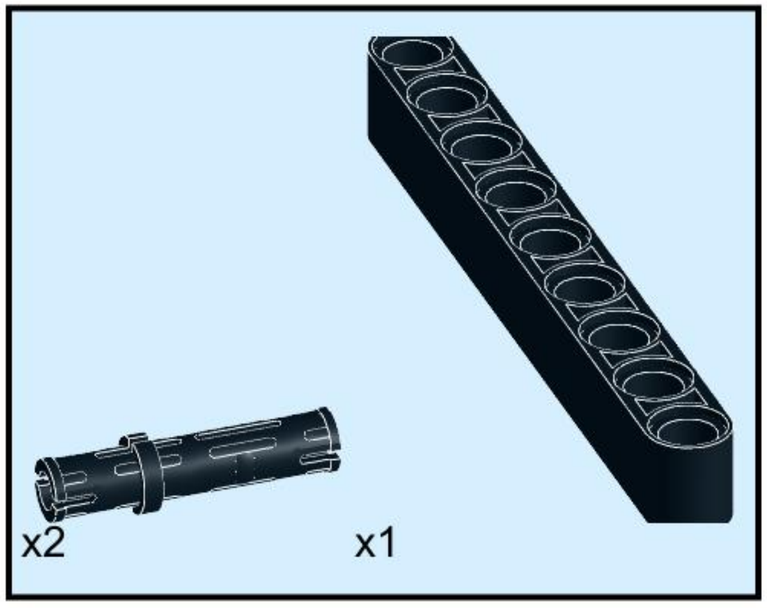

63

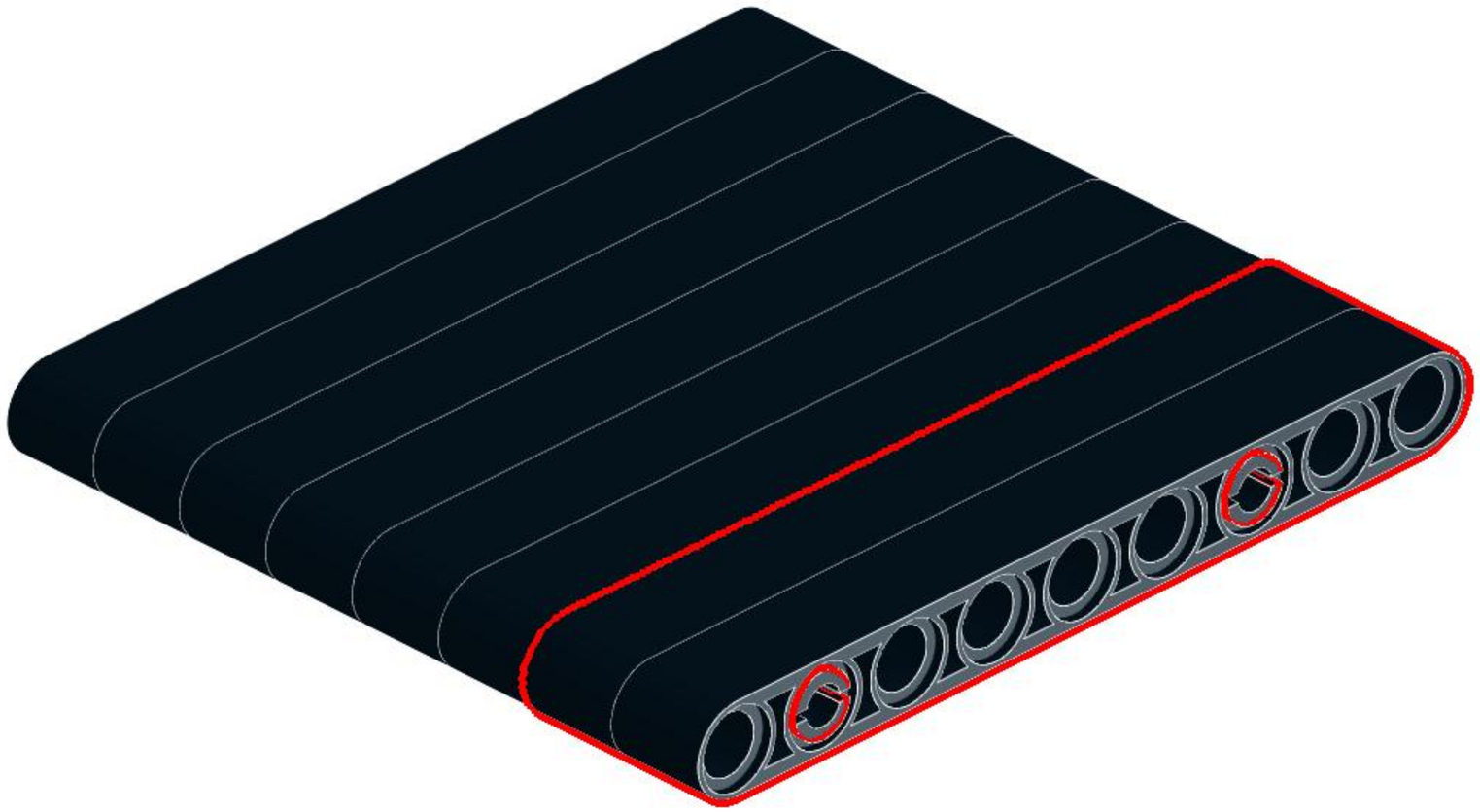

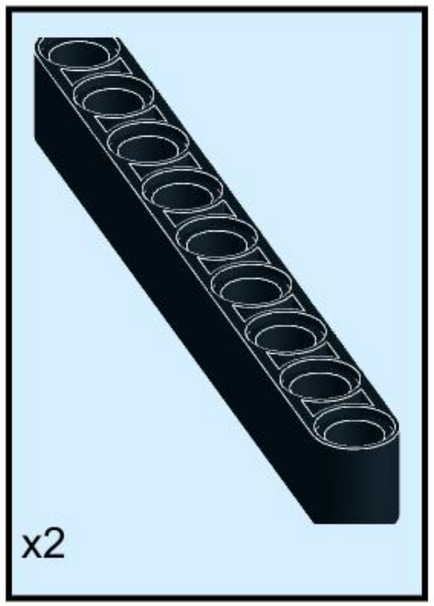

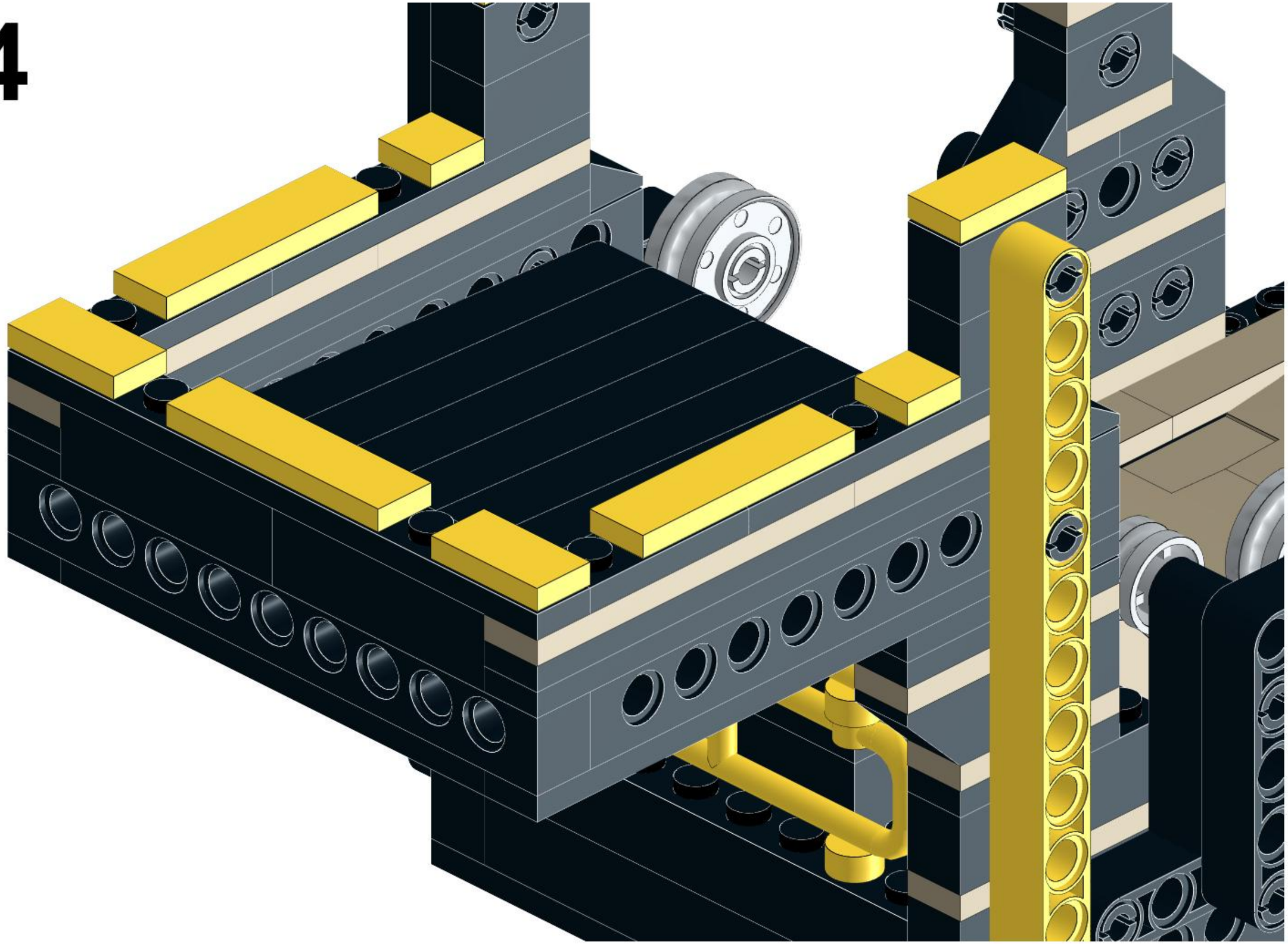

65

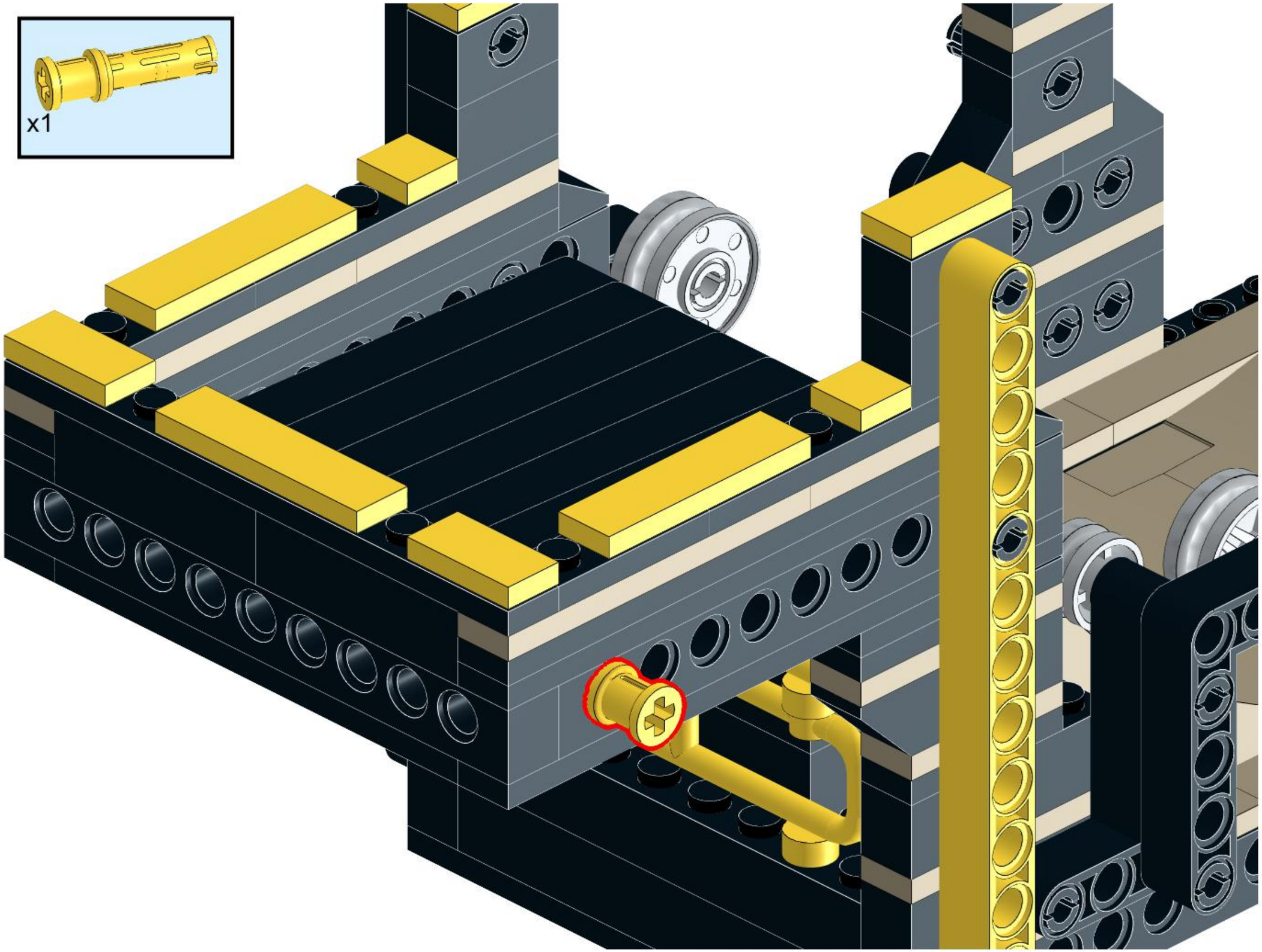

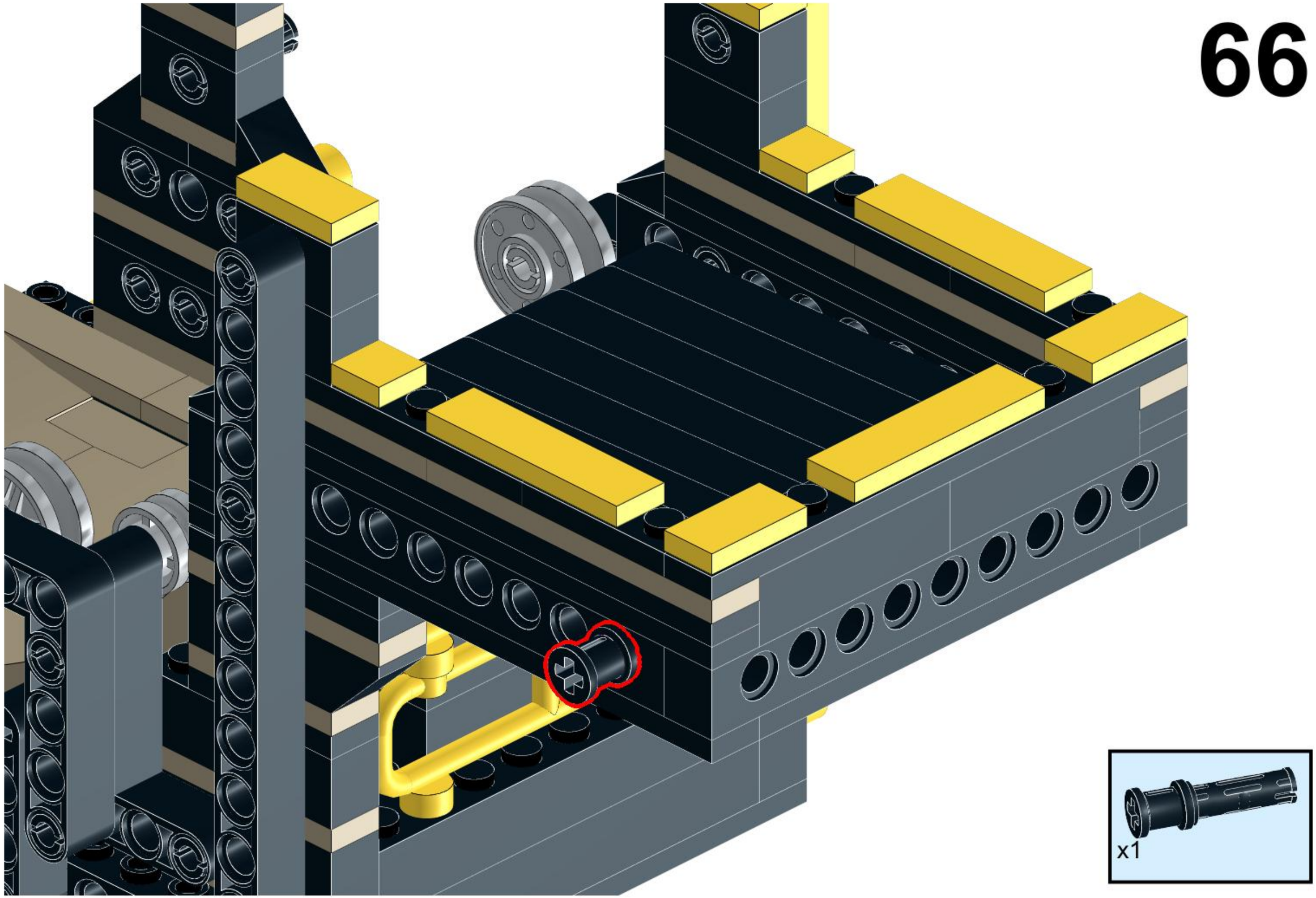
x1

67

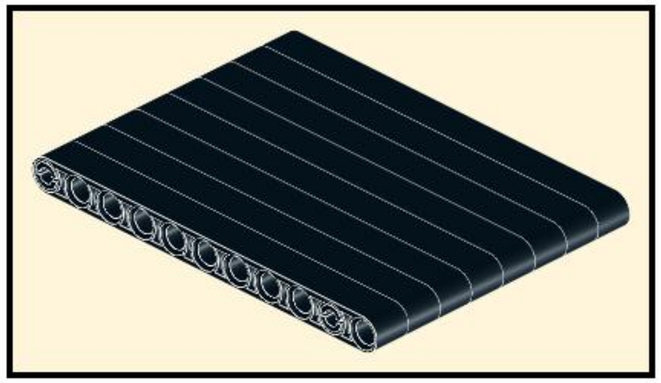

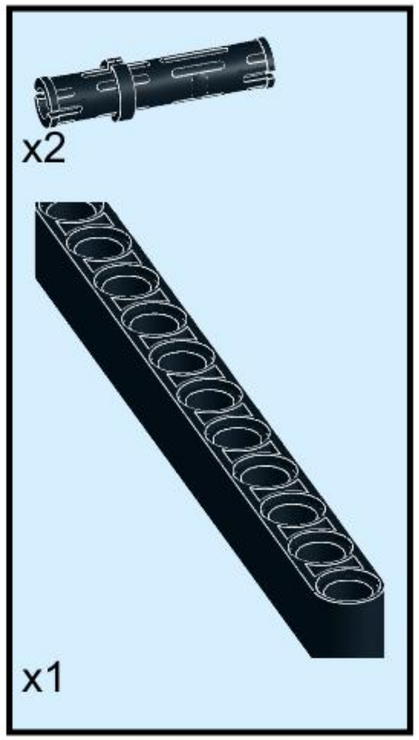

68

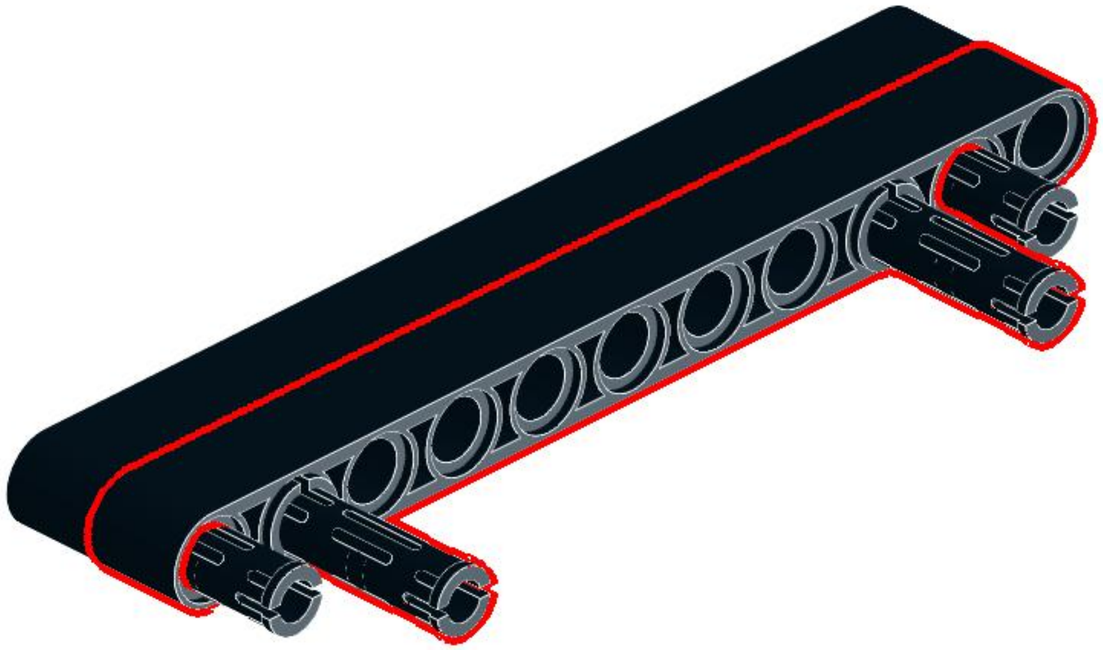

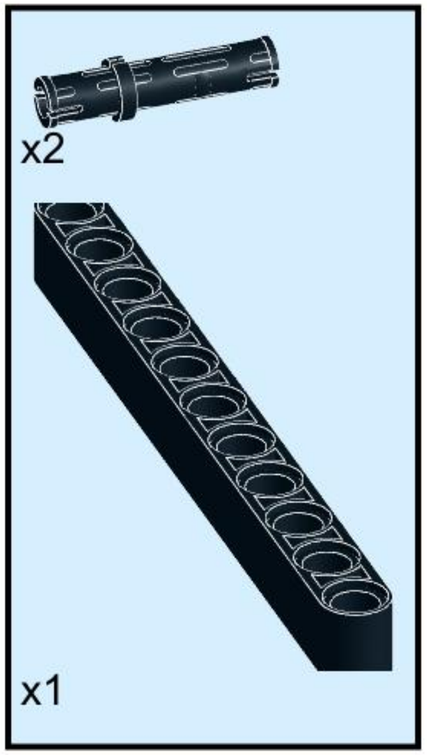

69

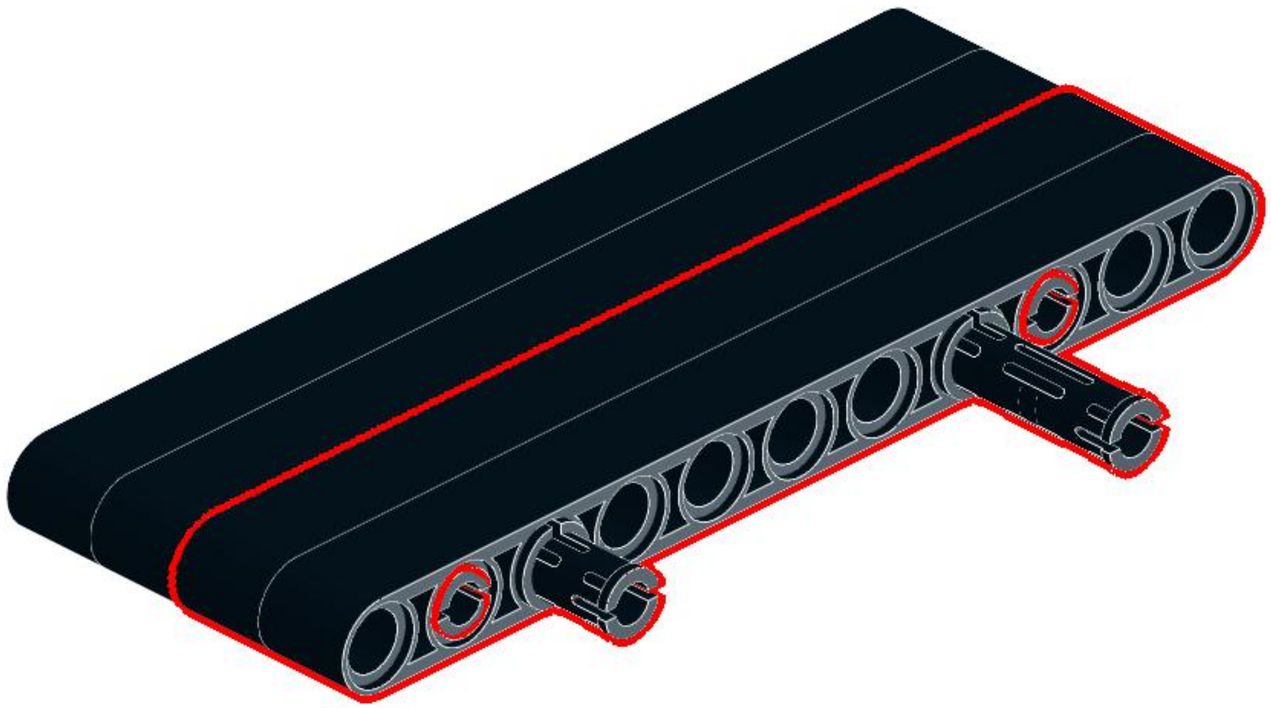

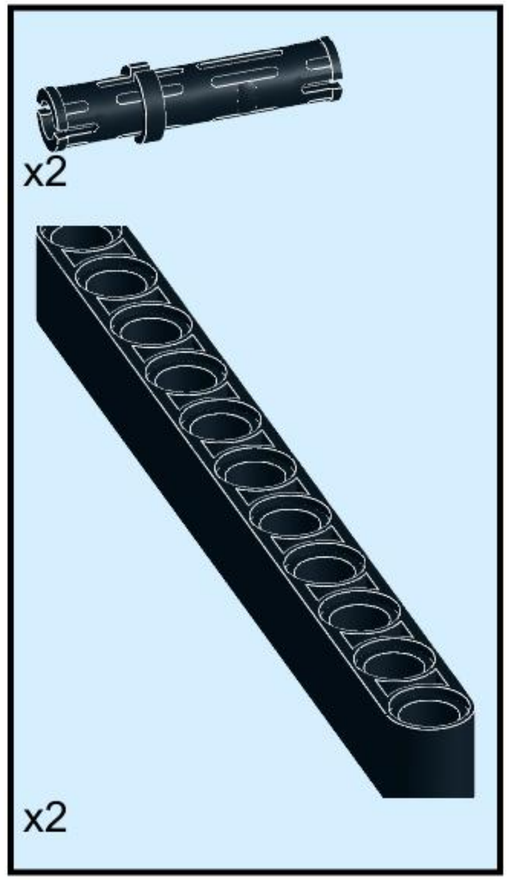

70

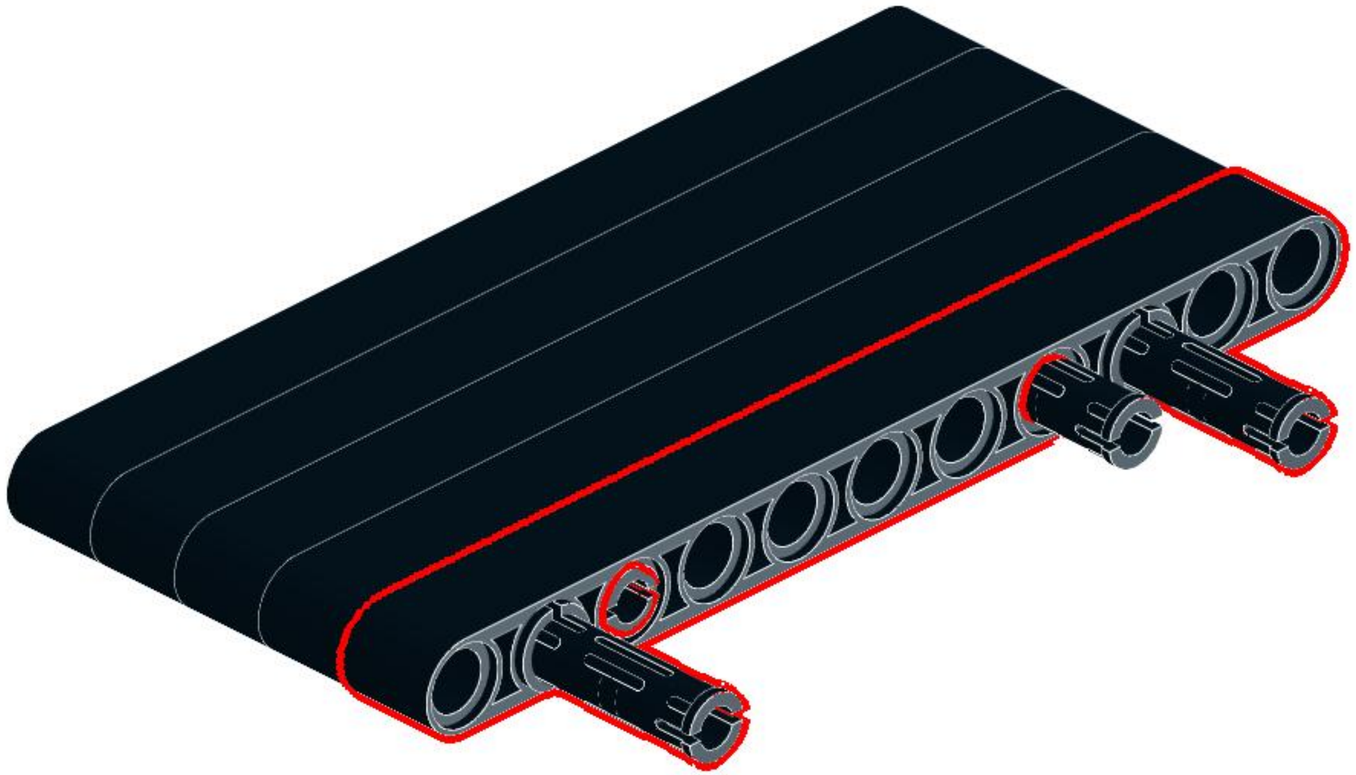

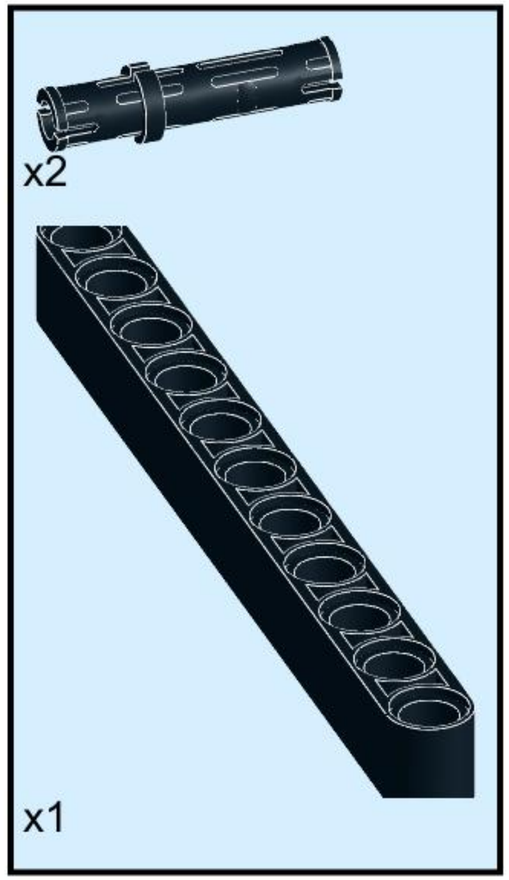

71

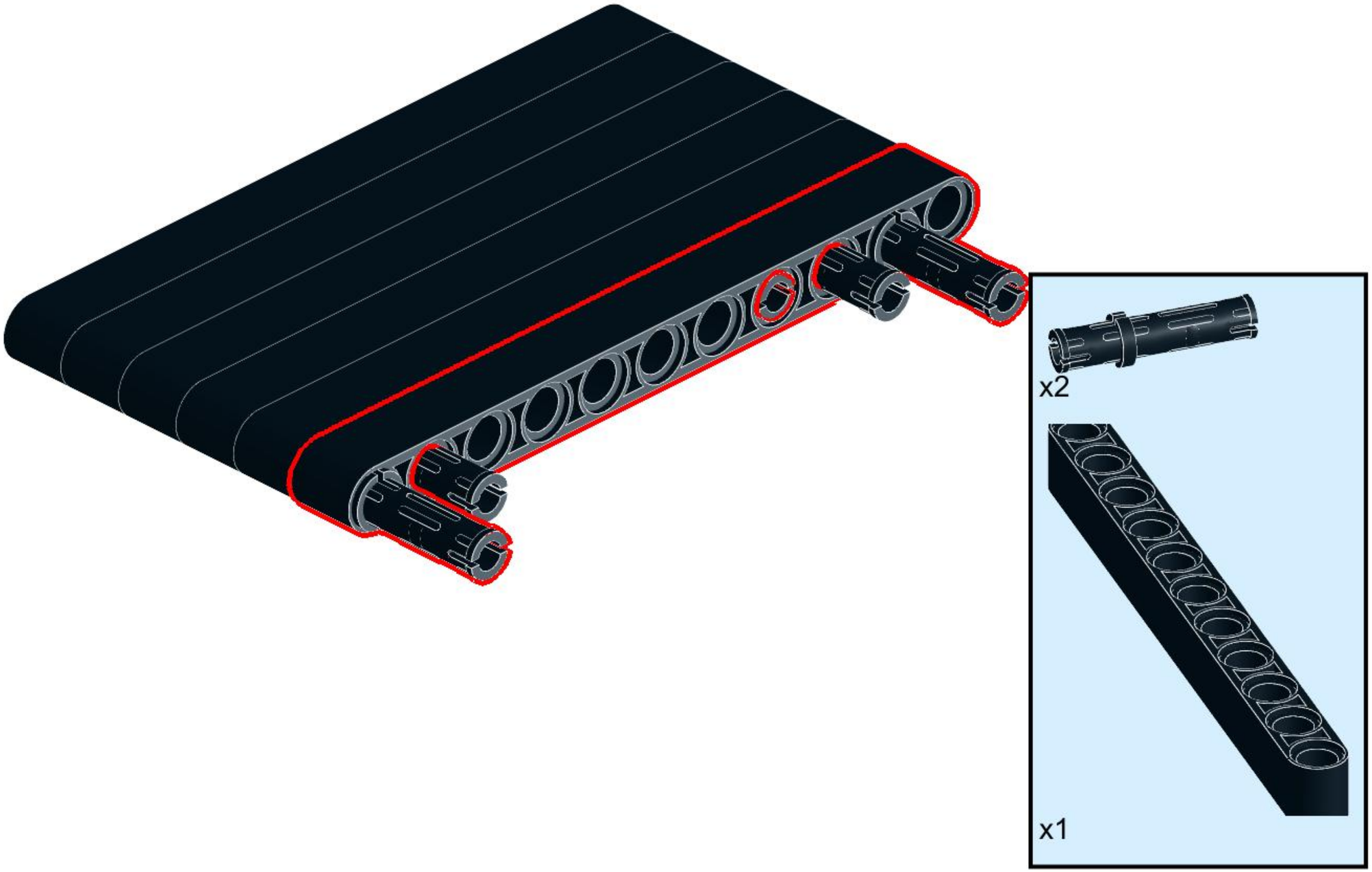

72

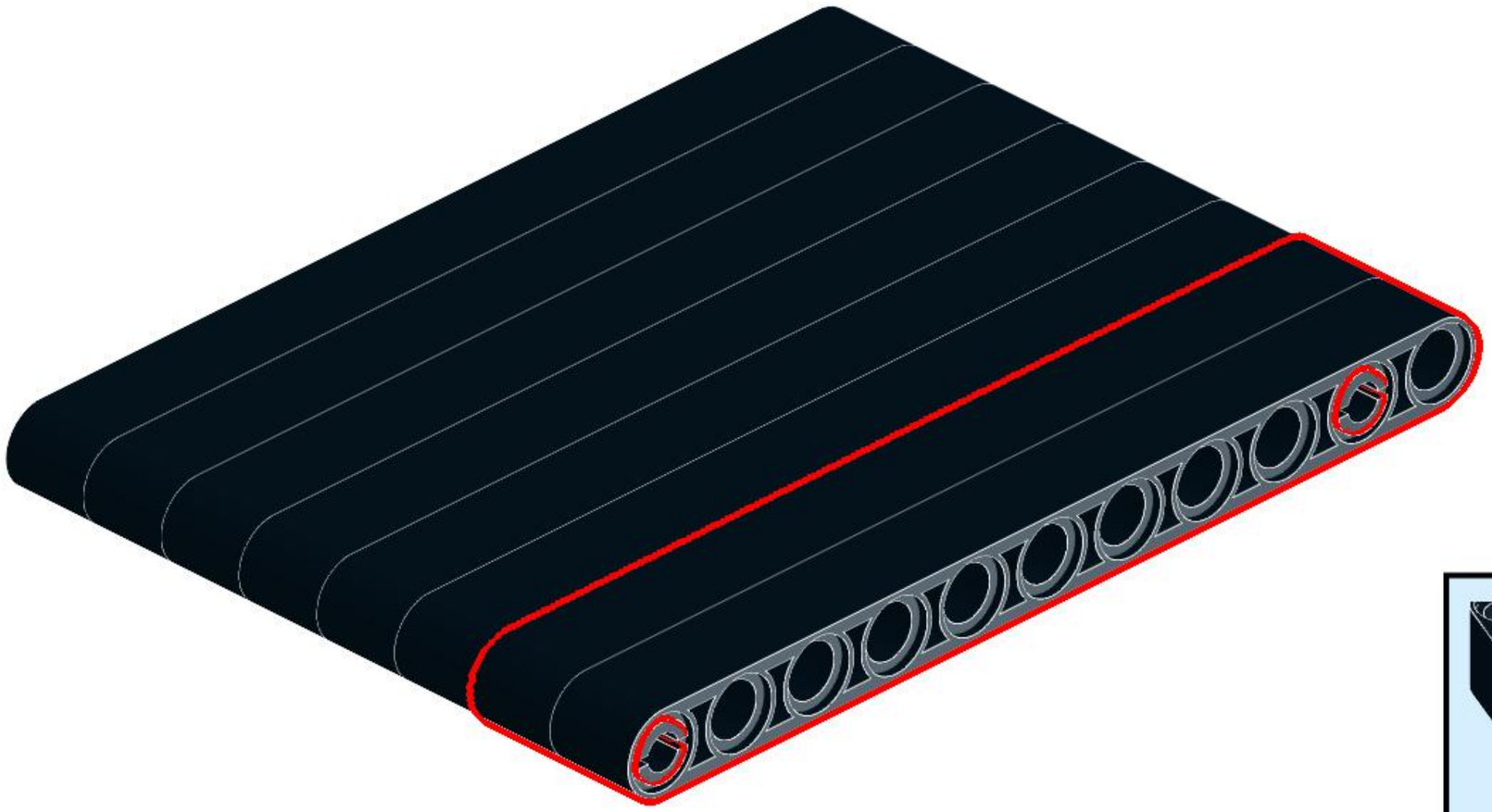

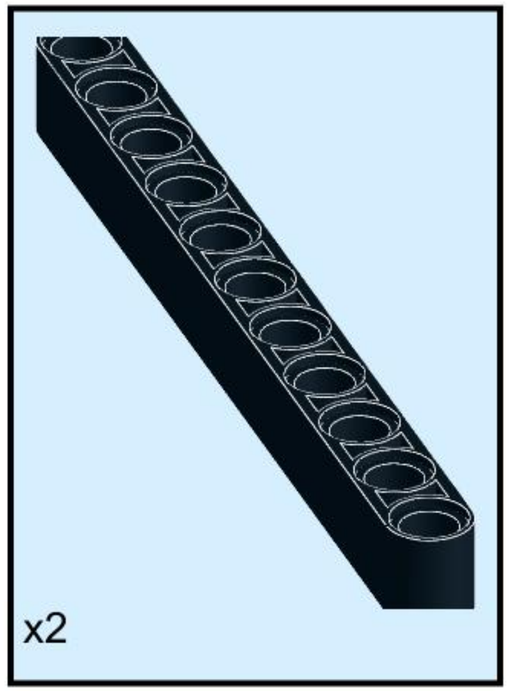

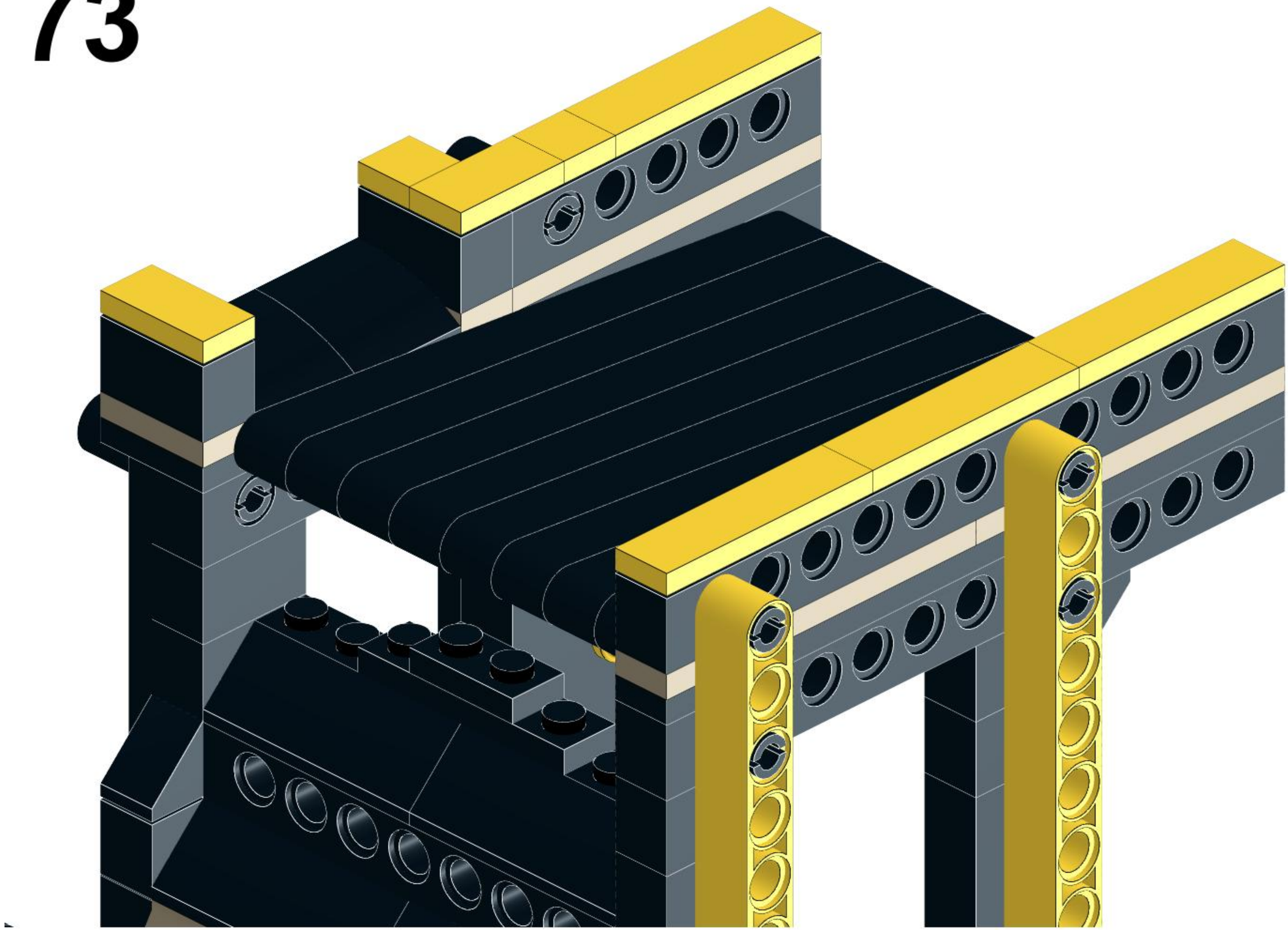

74

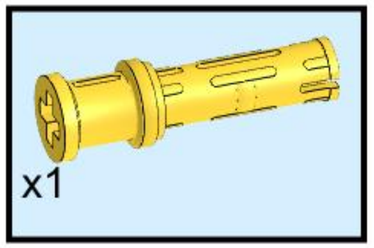

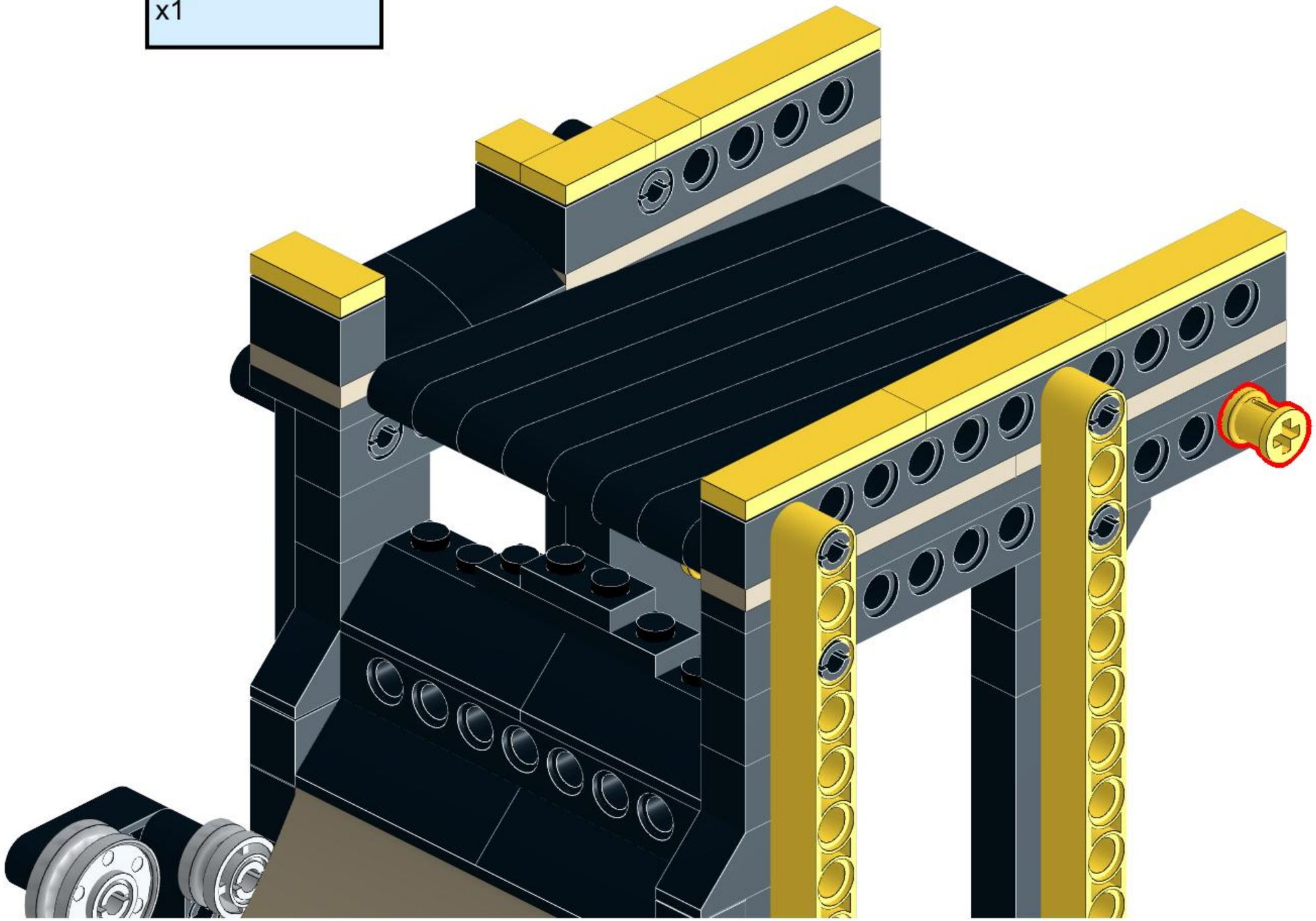

75

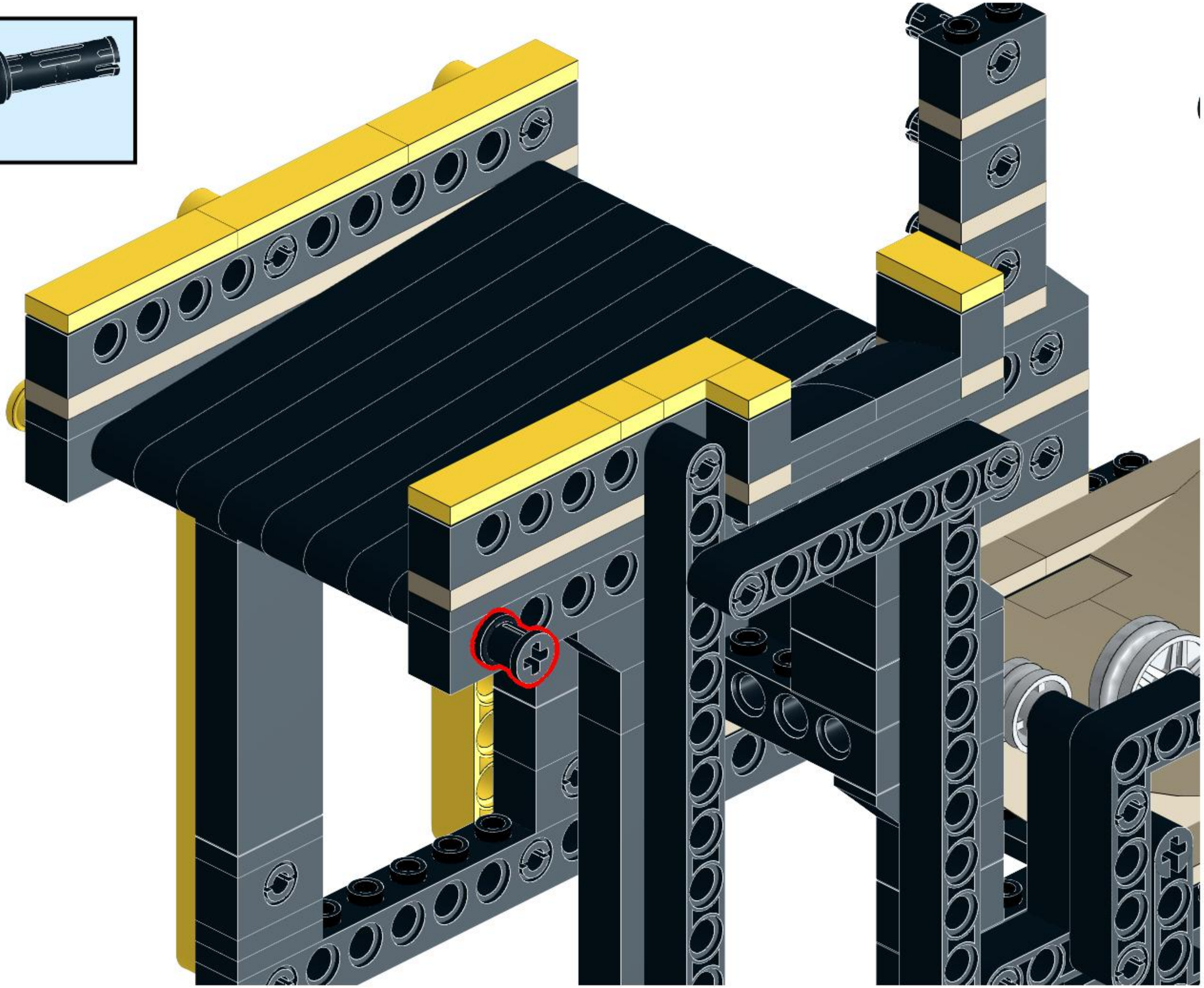

76

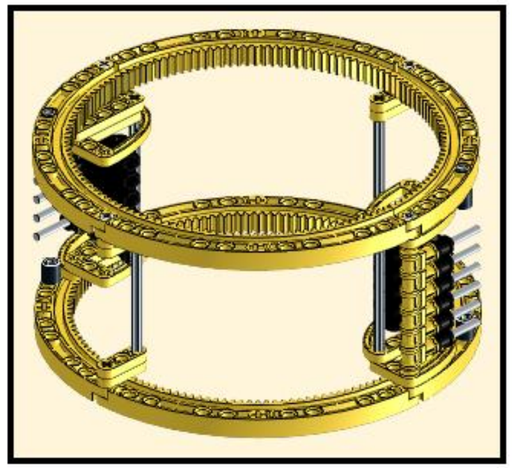

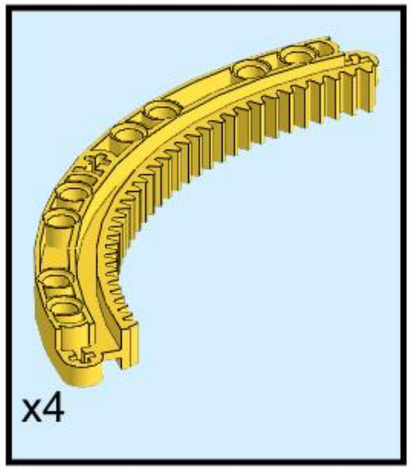

77

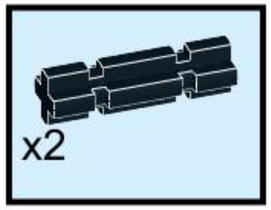

78

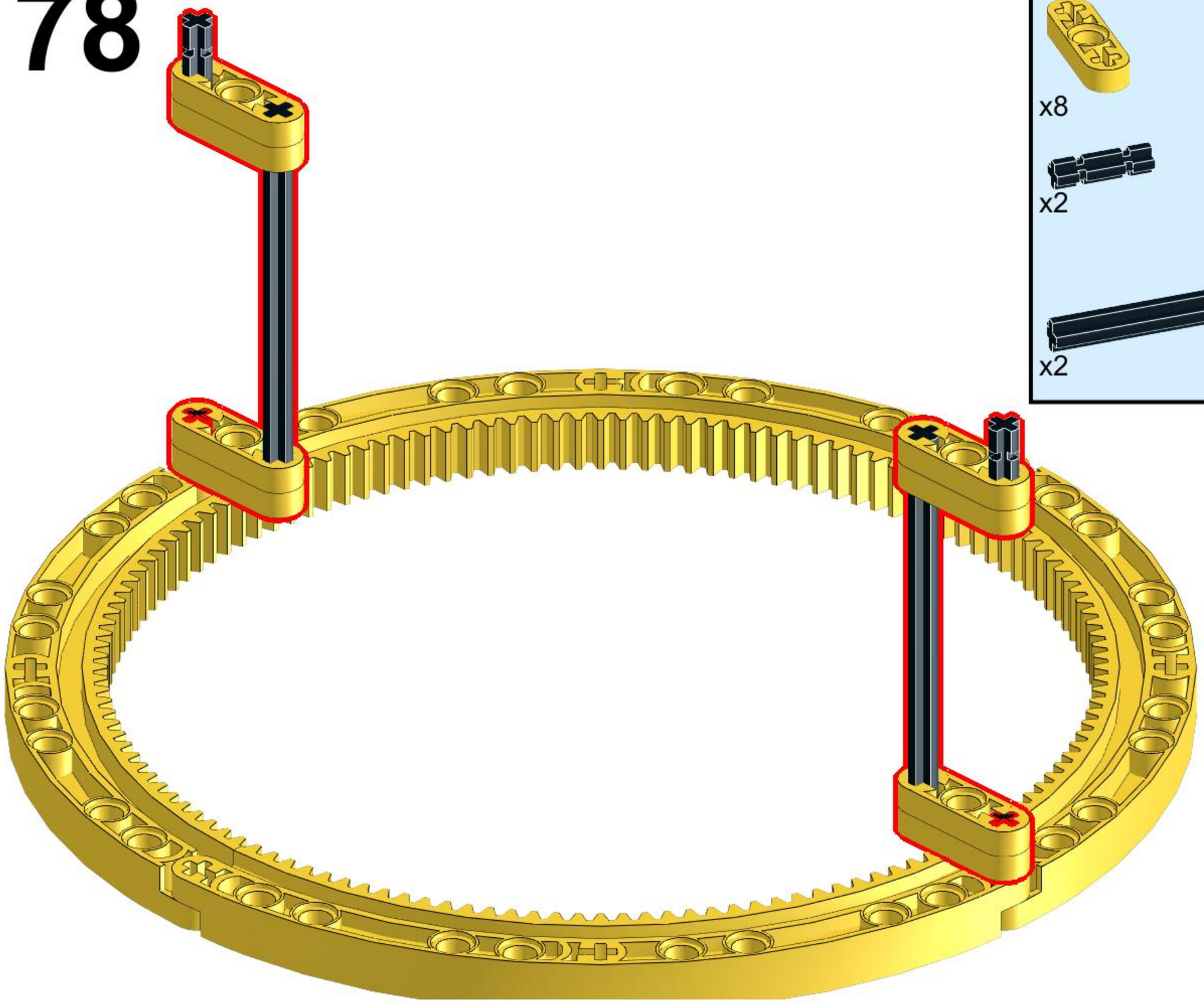

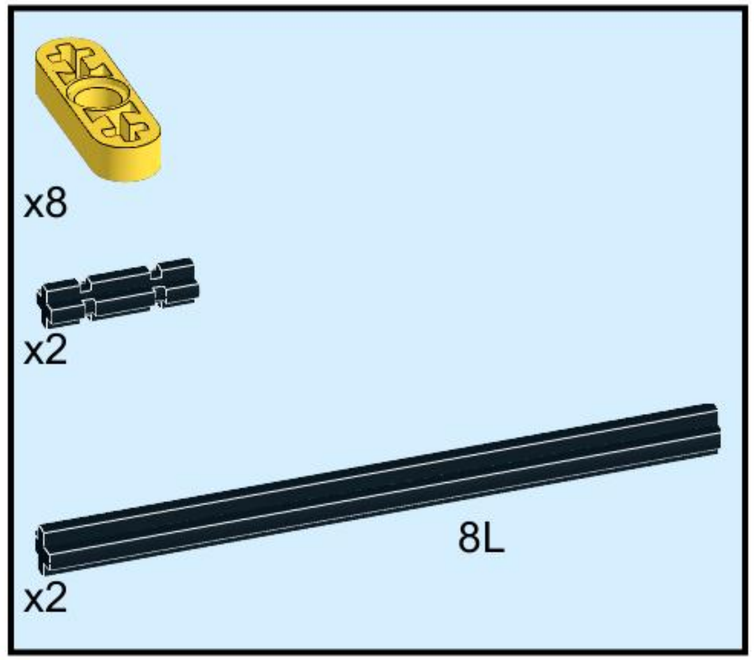

79

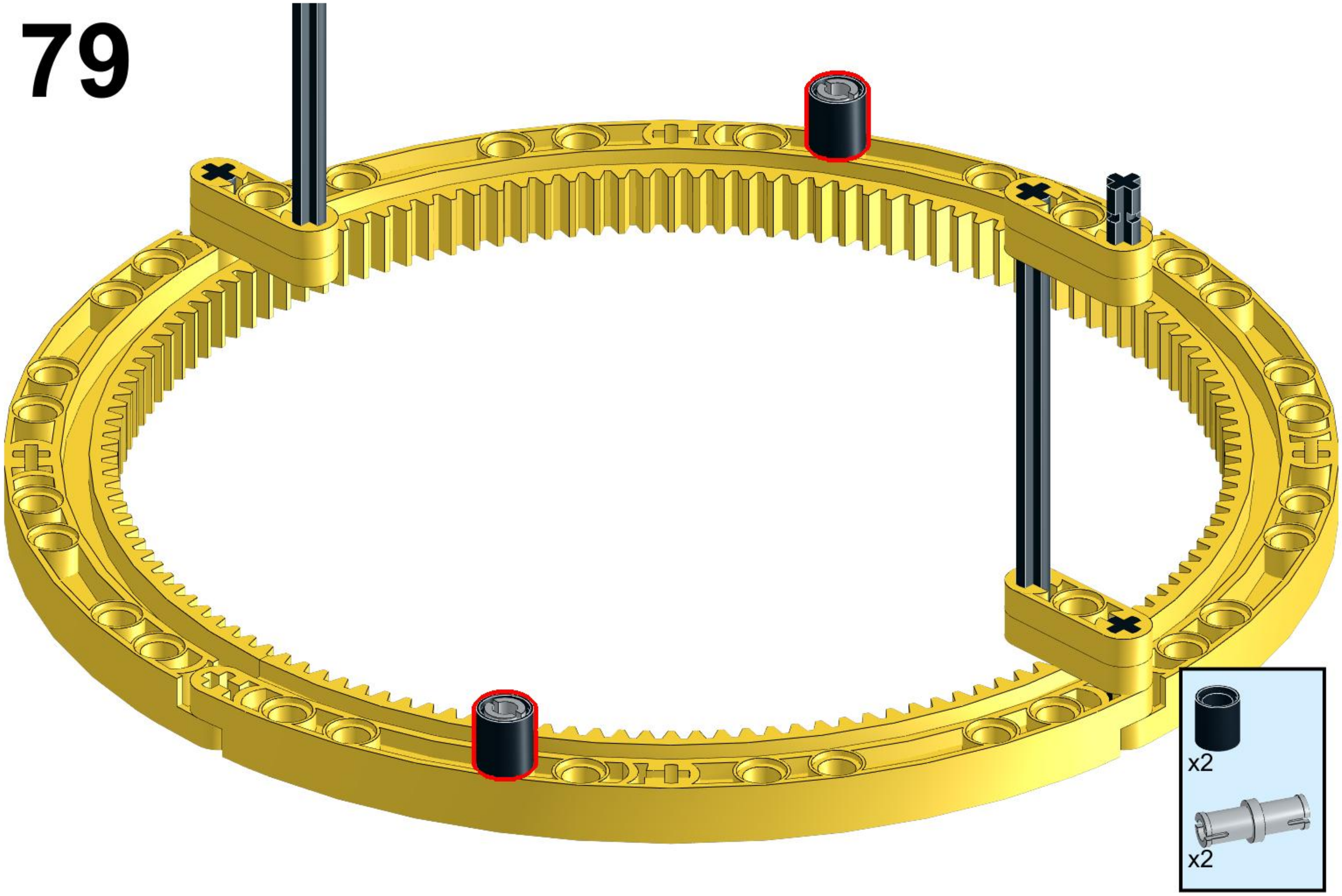

80

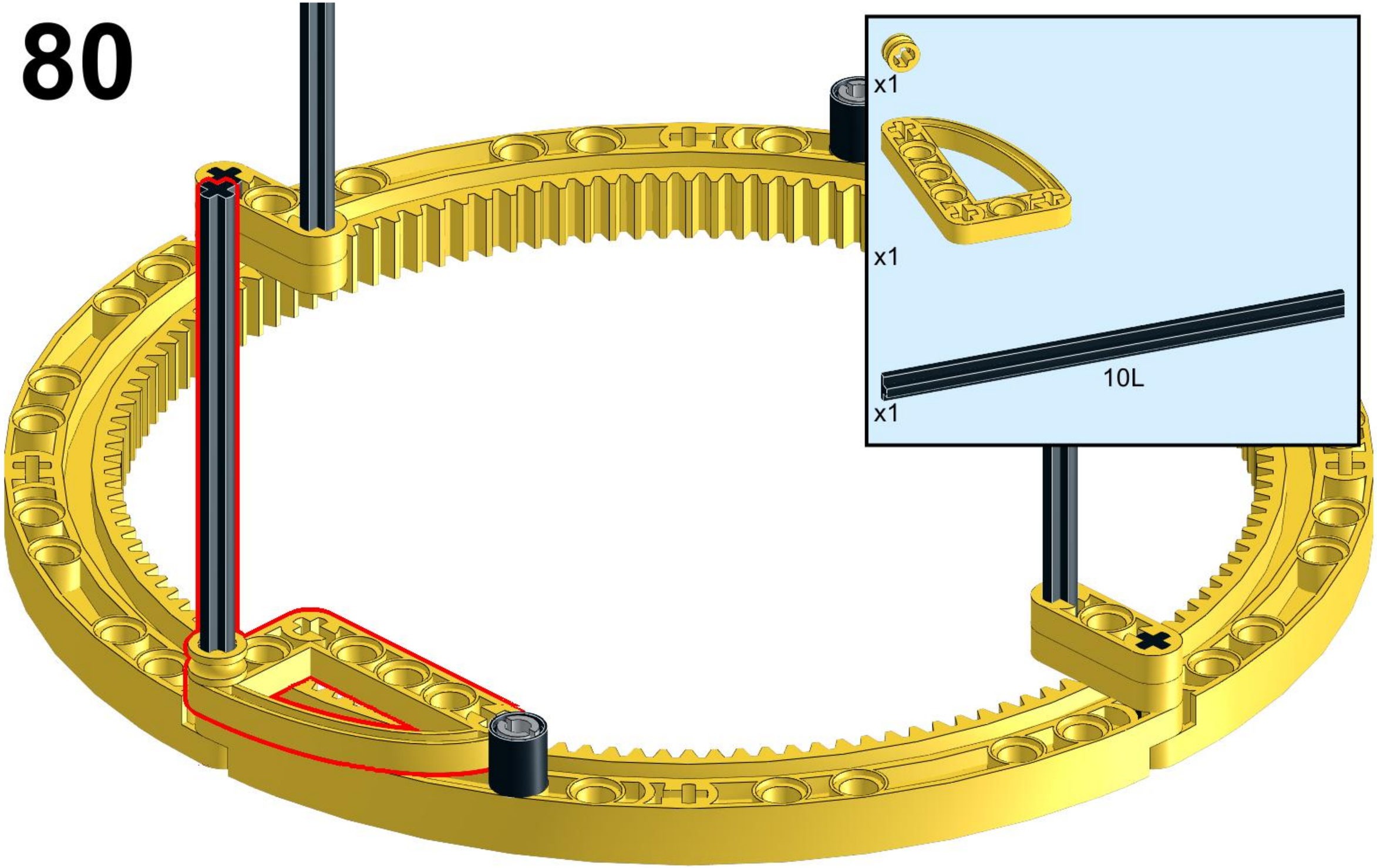

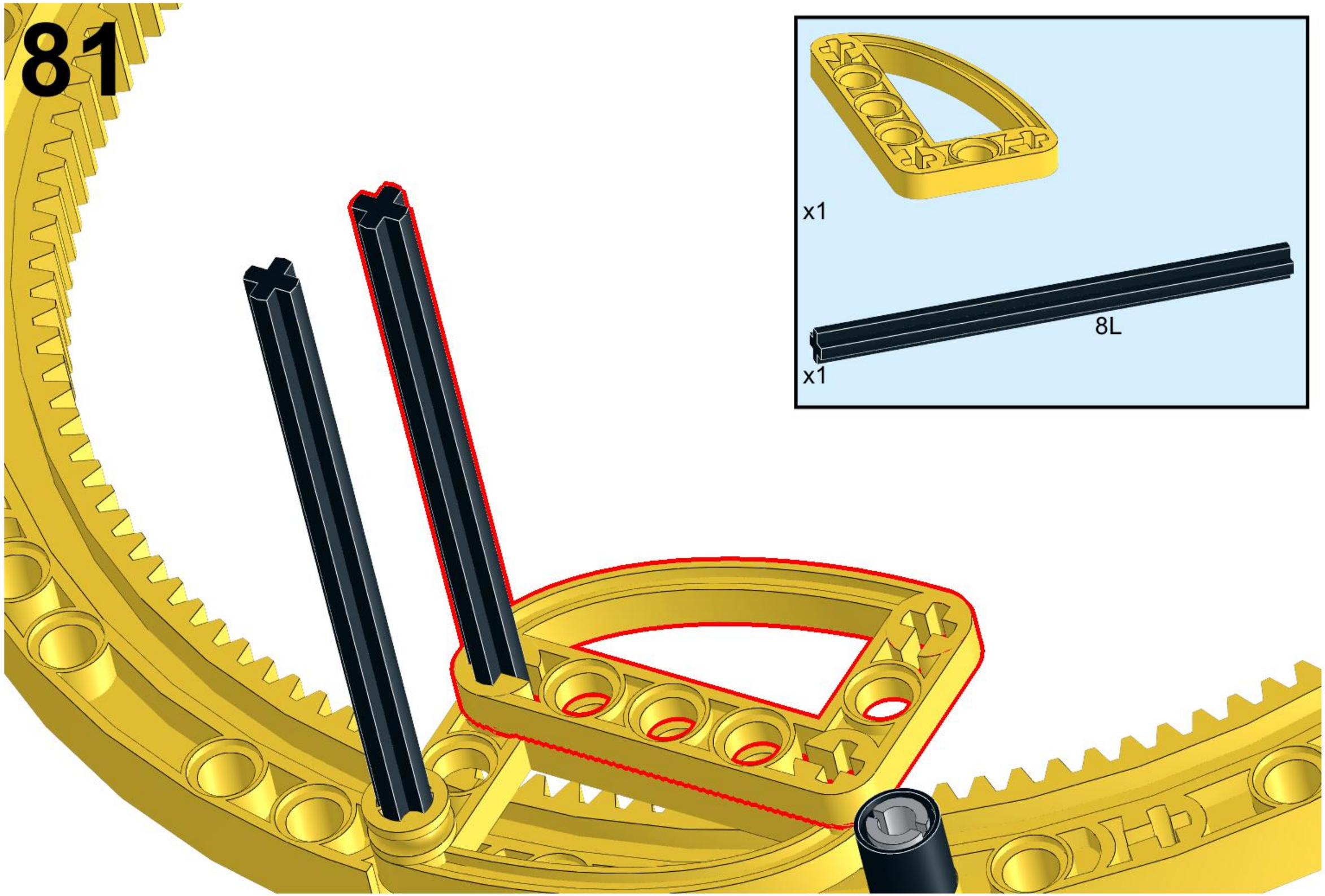
81
x1
8L
x1

82

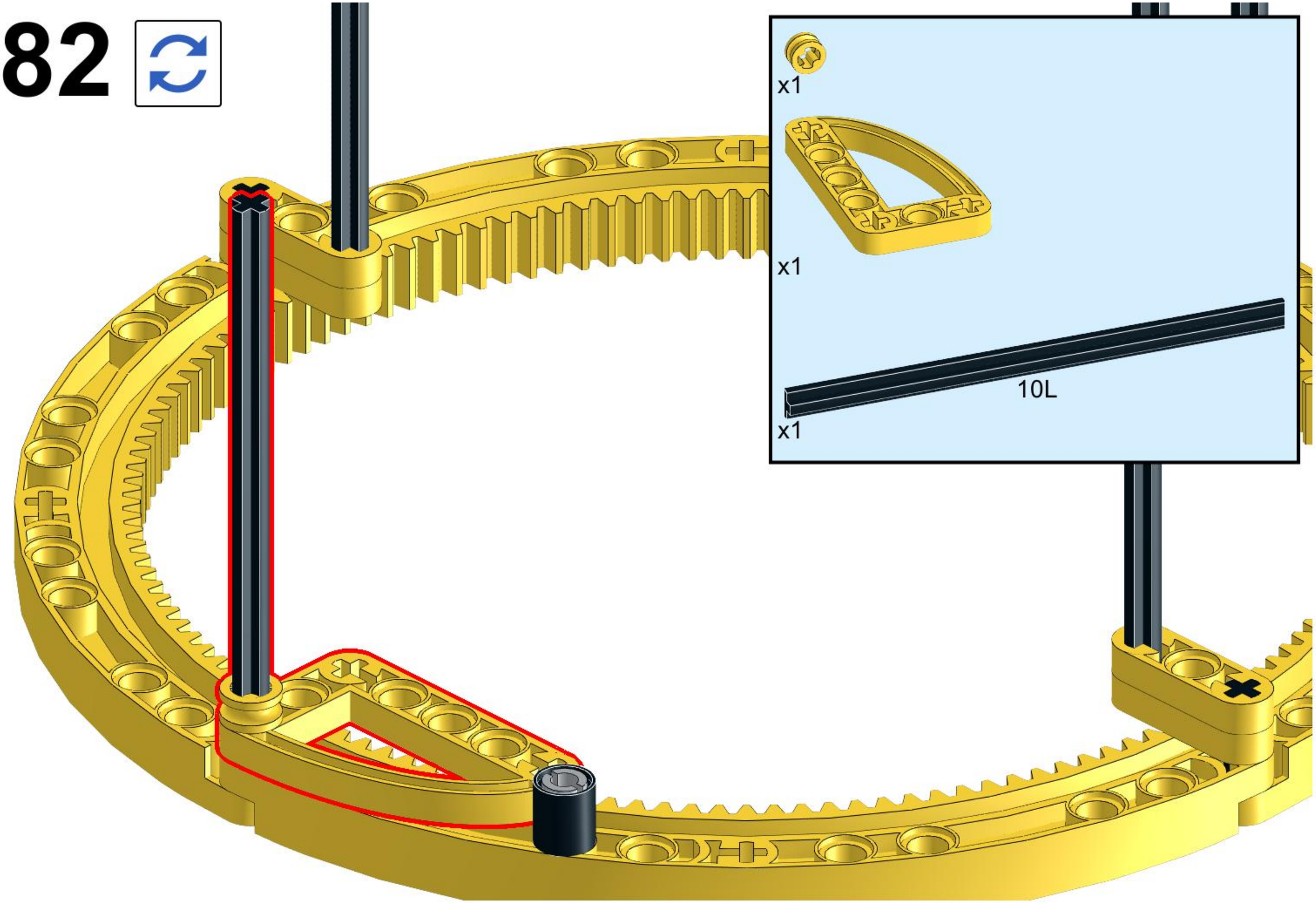

83

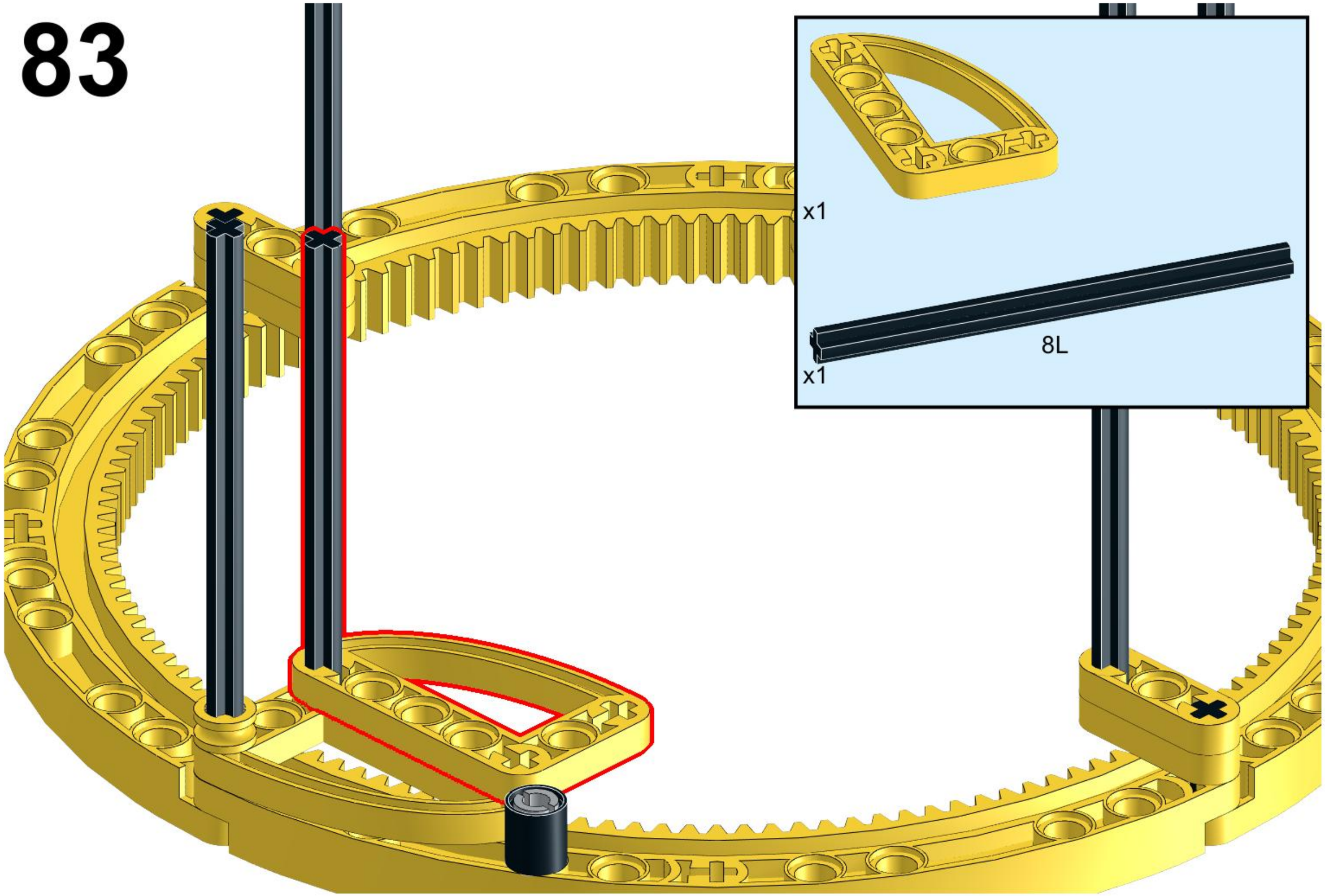

84

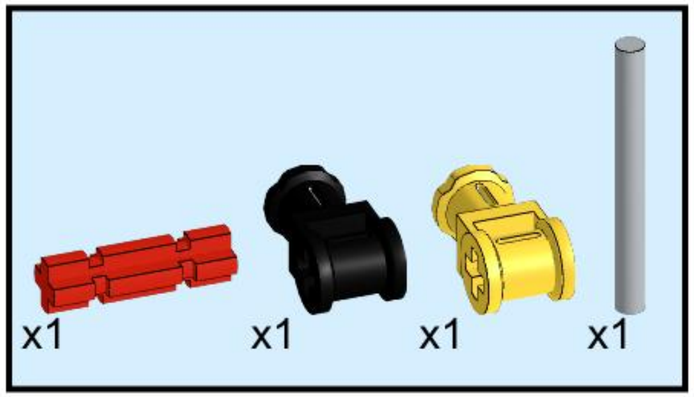

All grey bars are 4L

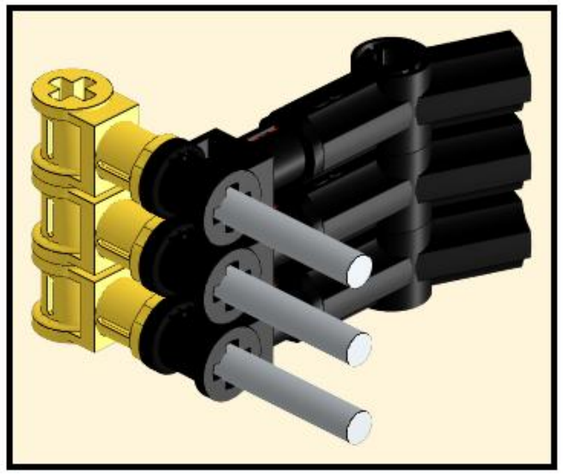

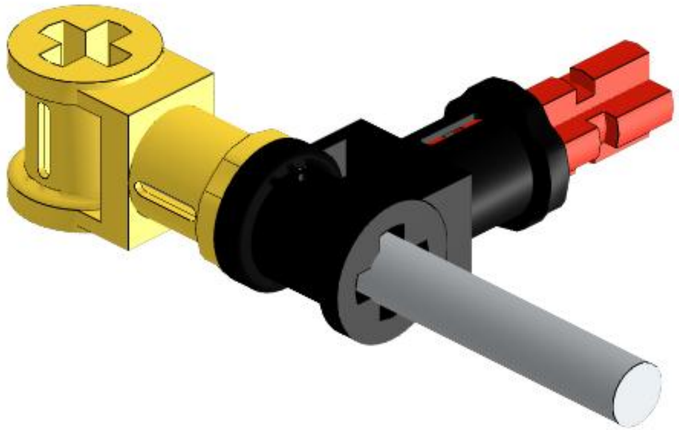

85

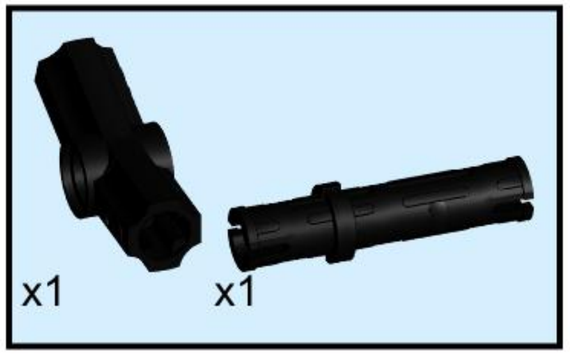

All angled connectors are #3

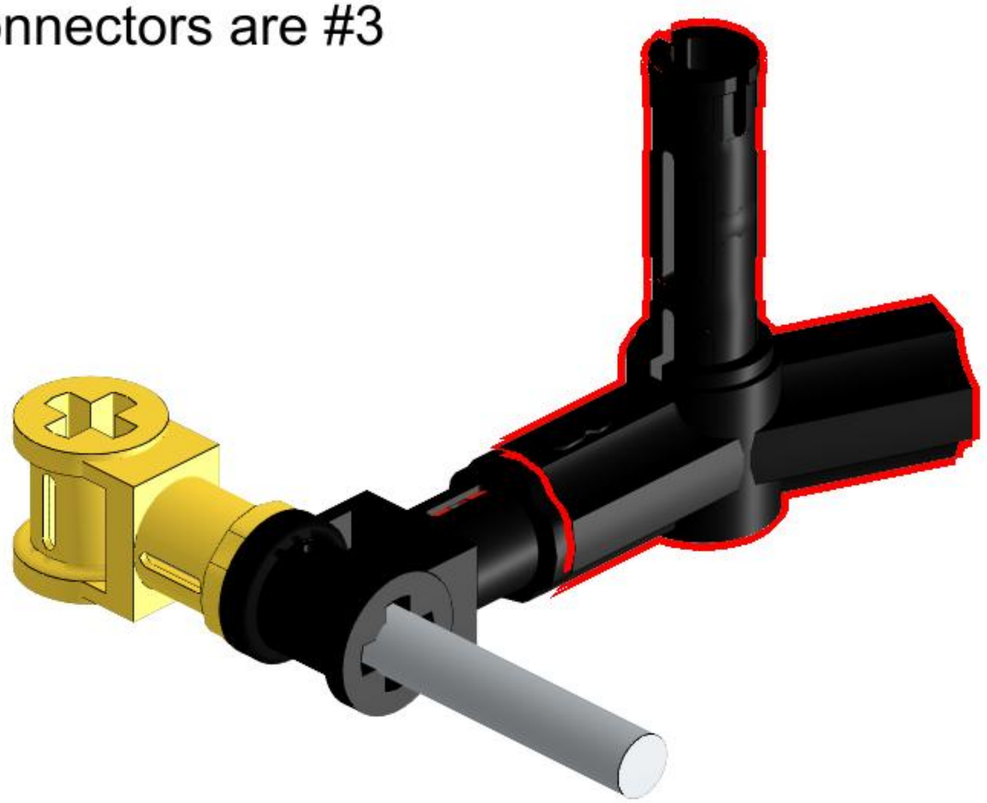

86

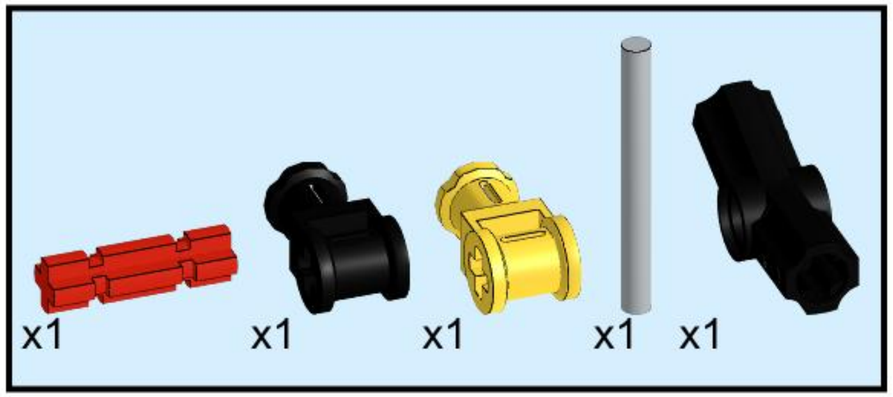

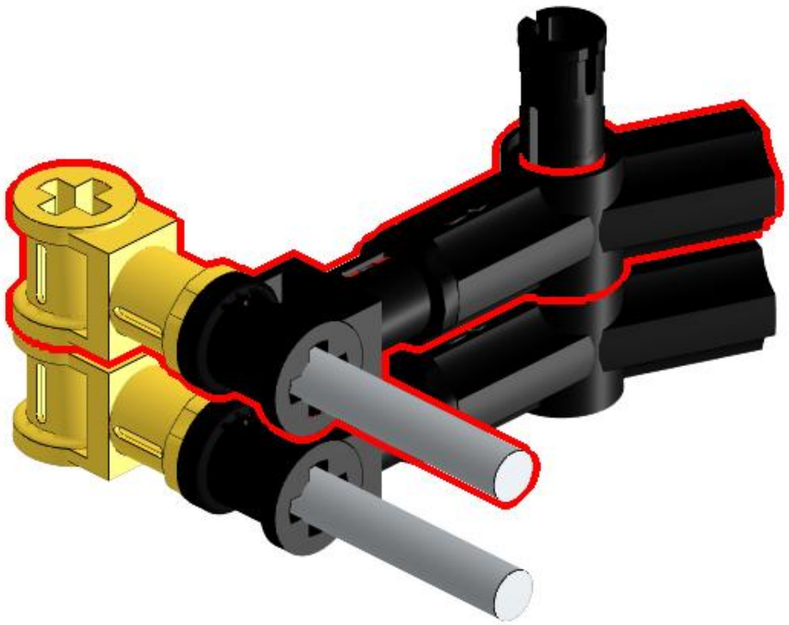

87

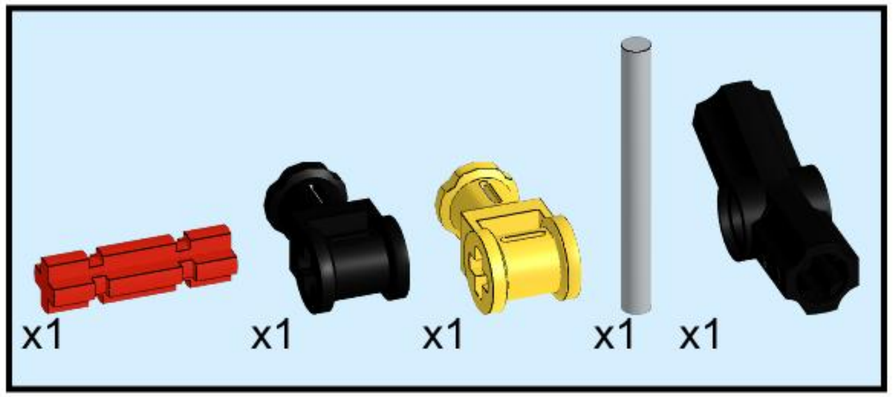

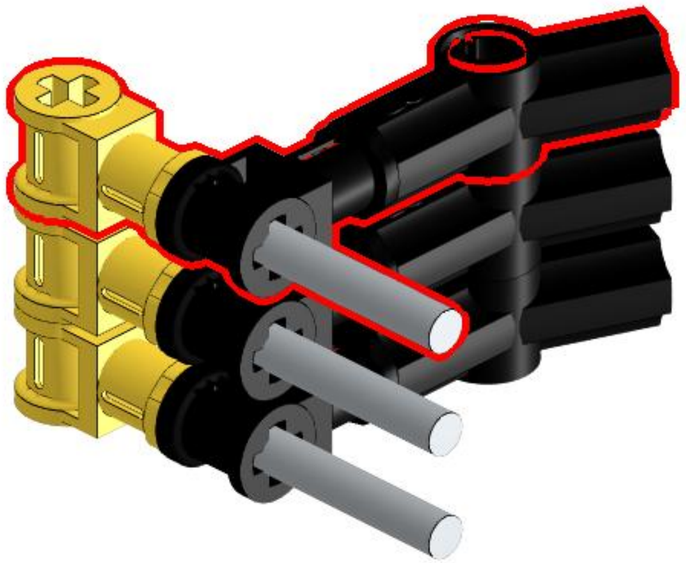

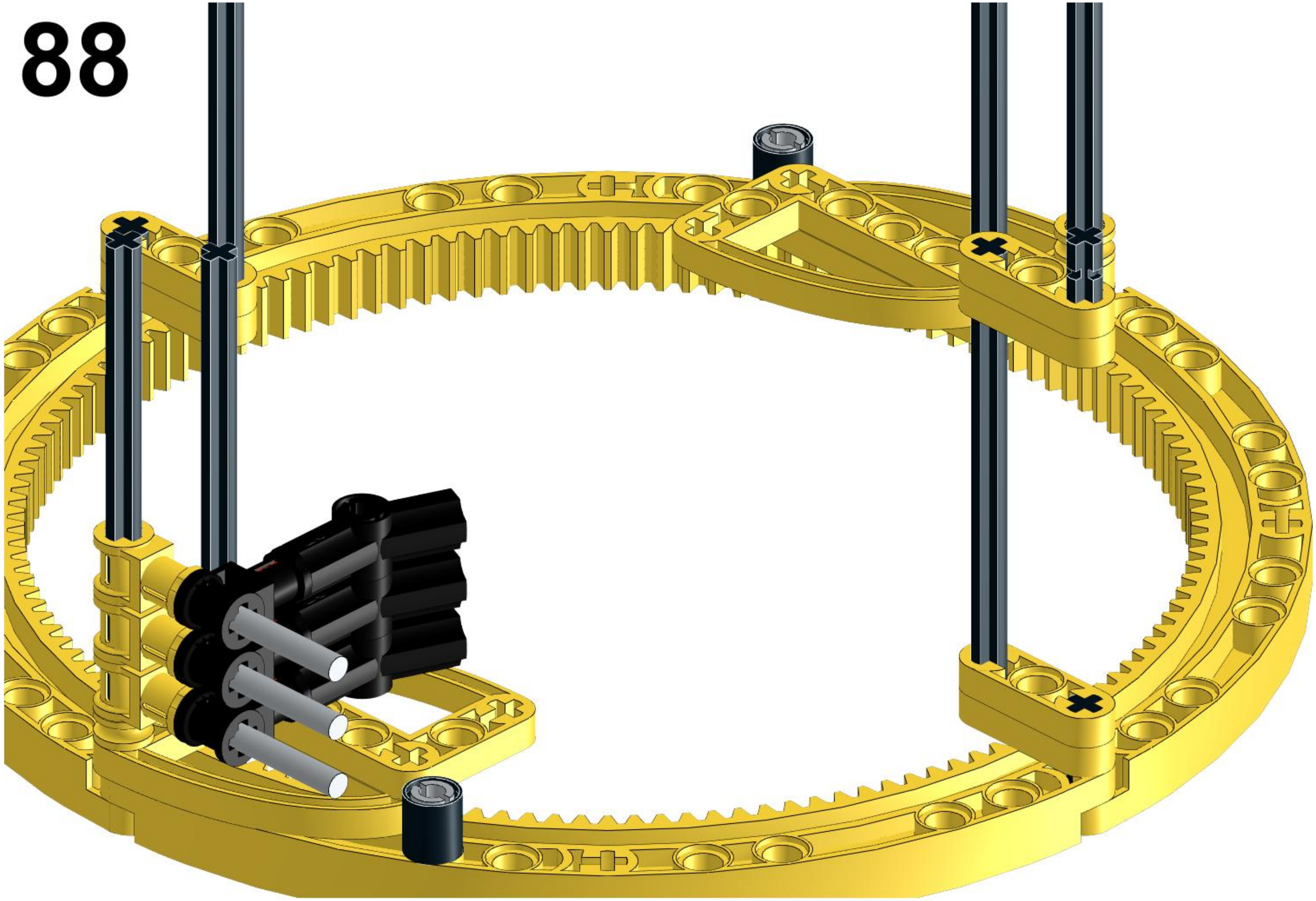

89

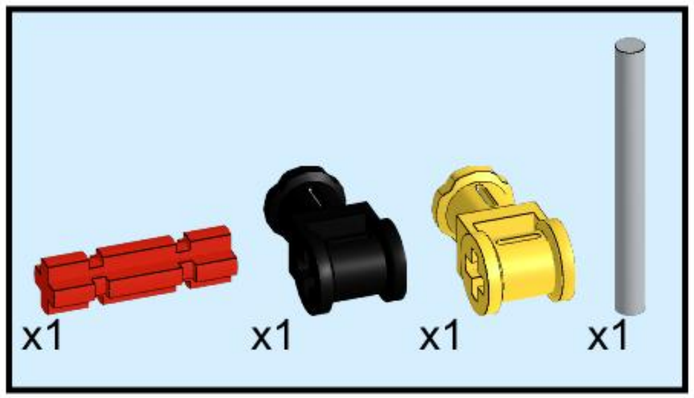

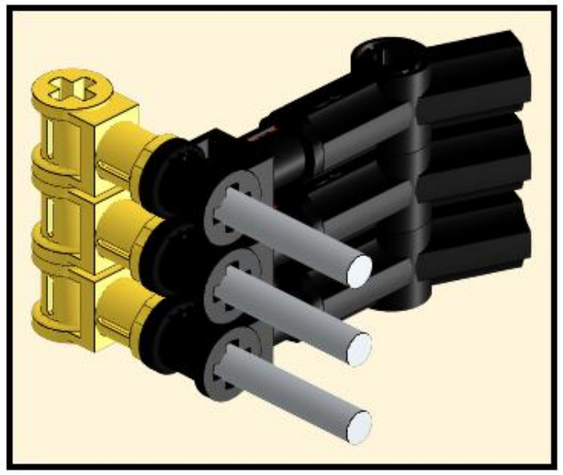

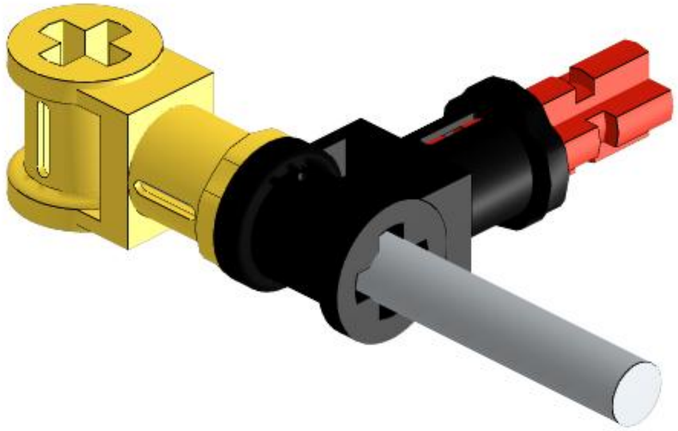

90

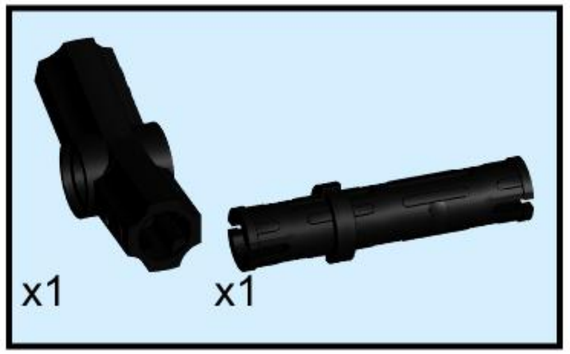

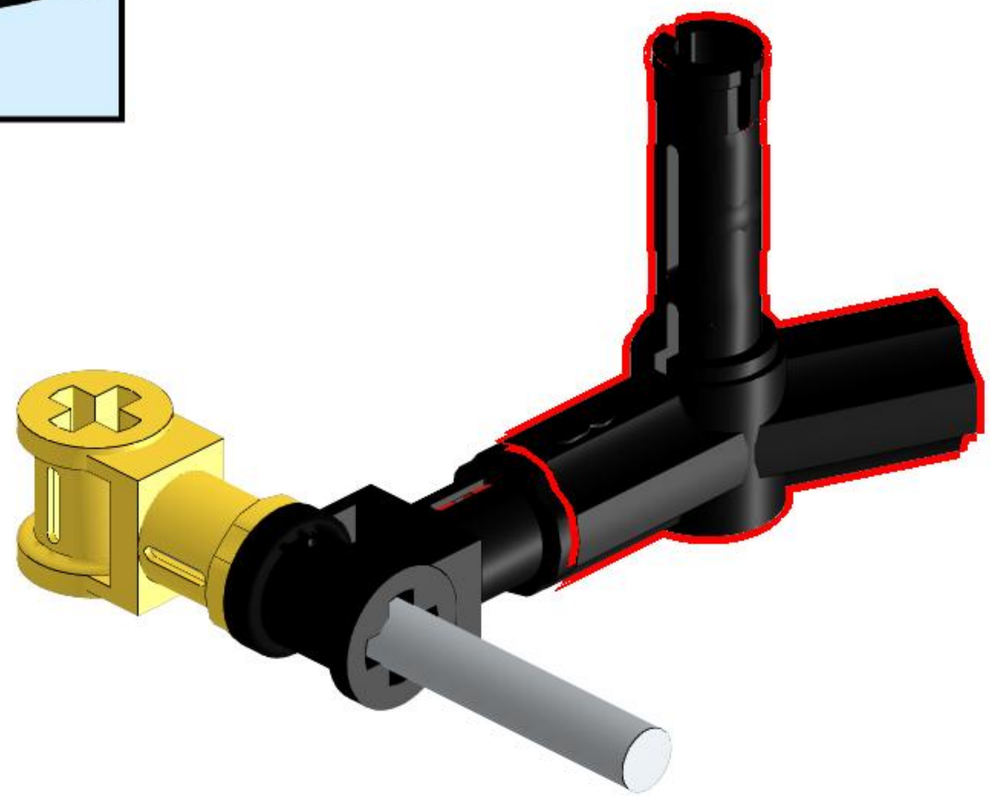

91

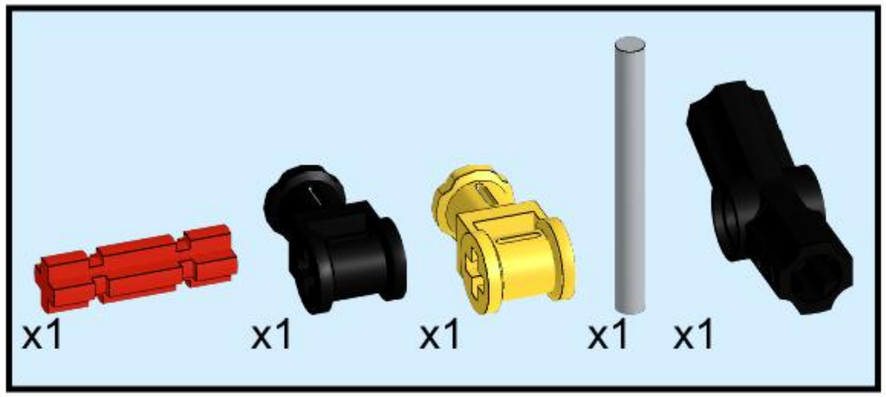

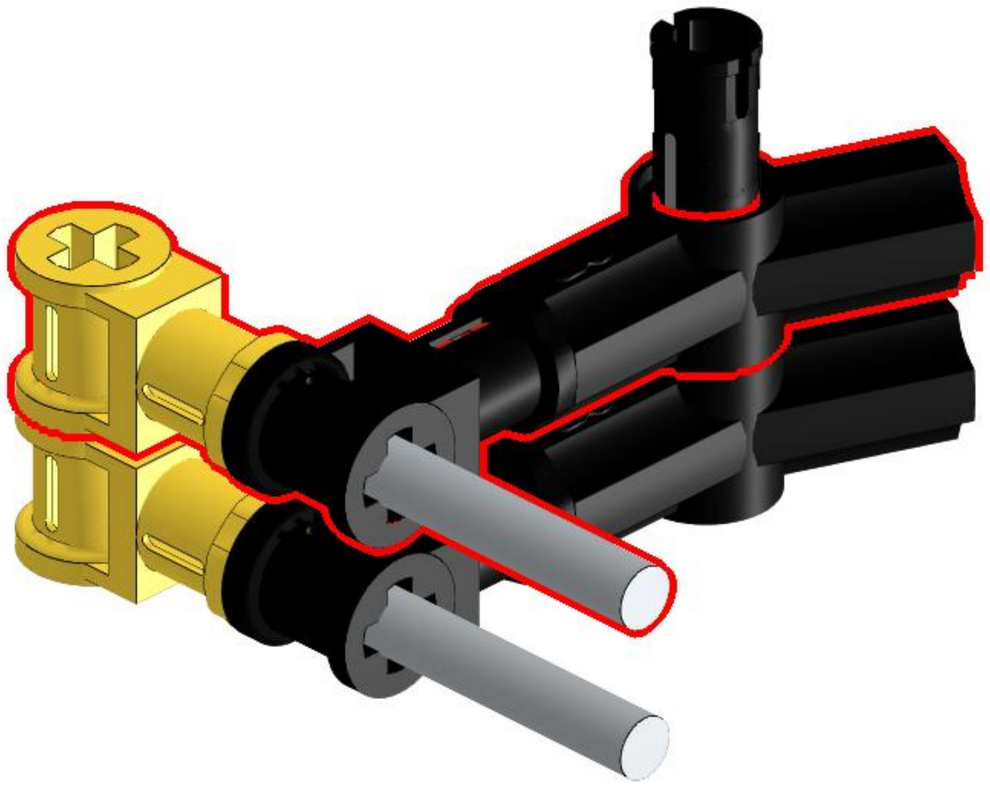

92

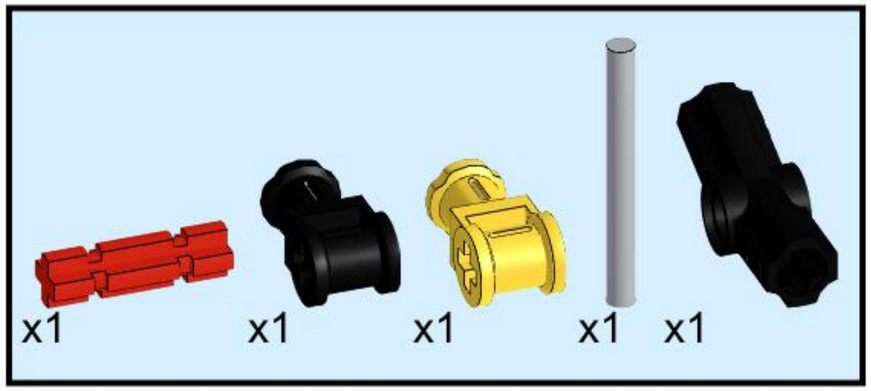

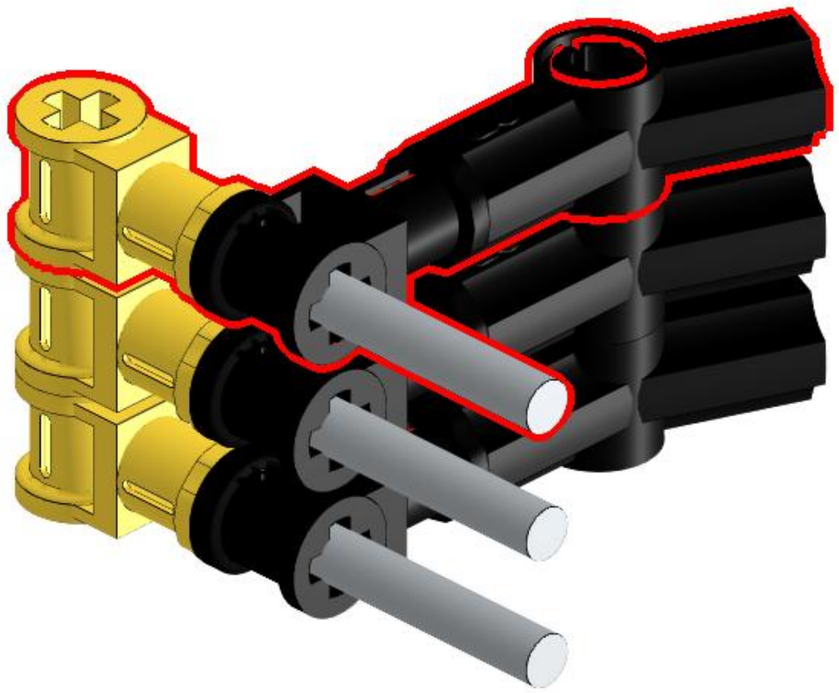

93

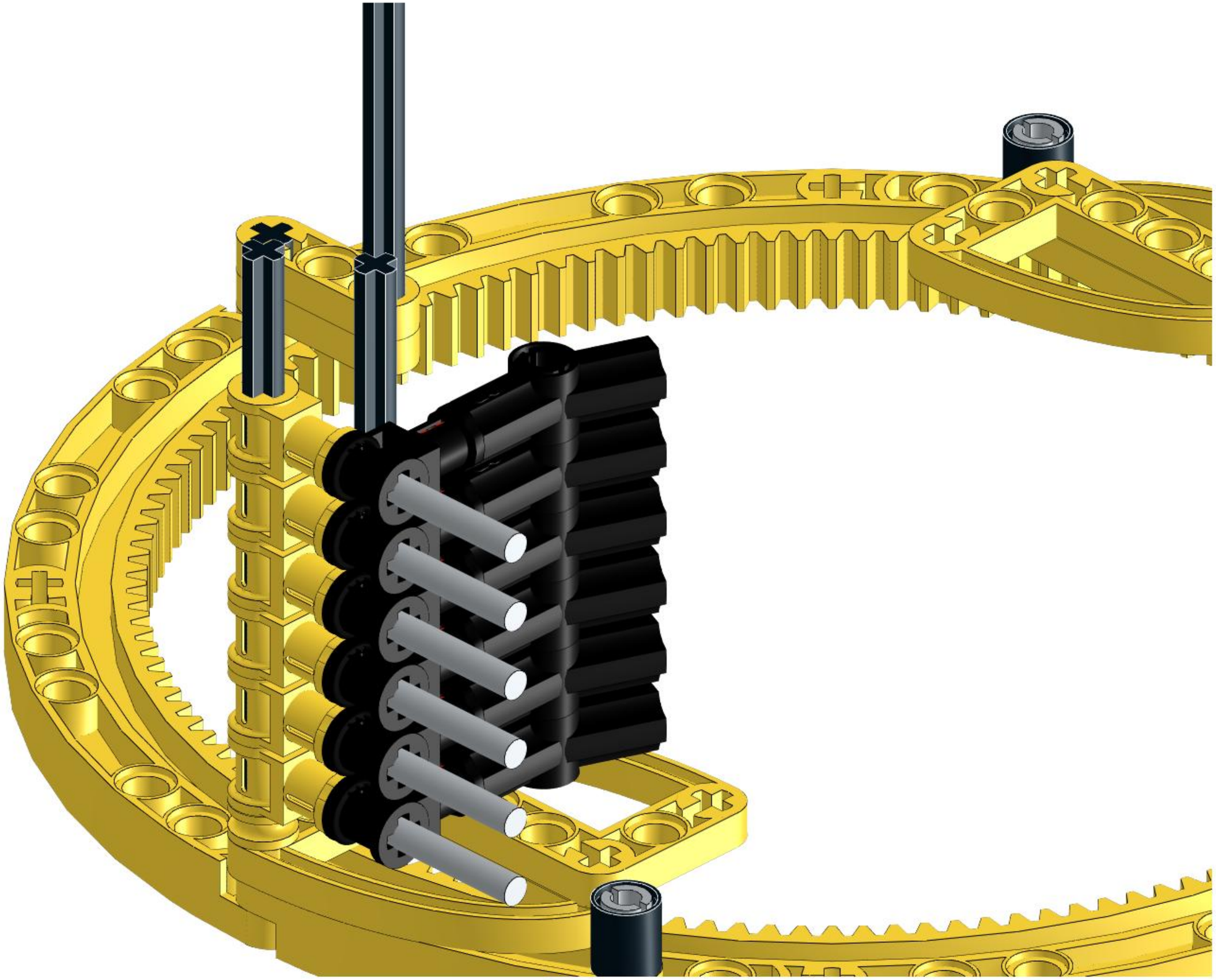

94

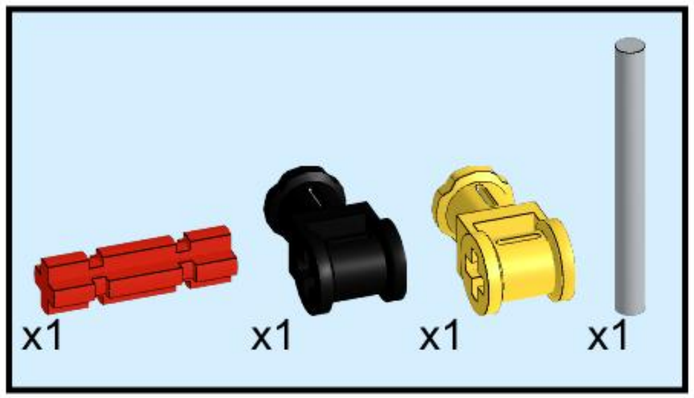

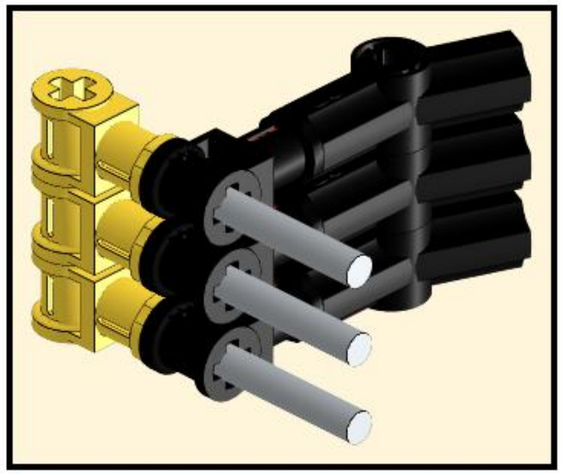

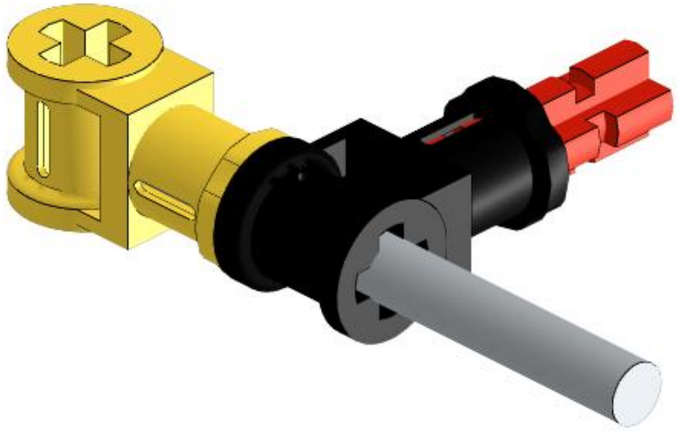

95

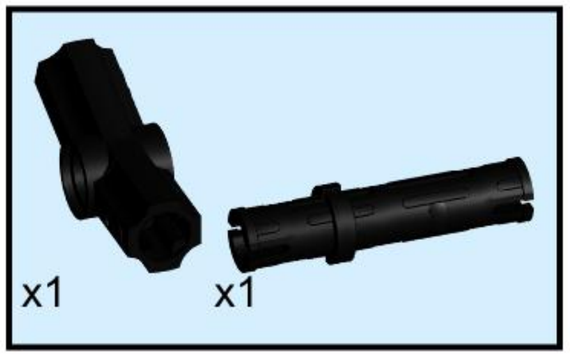

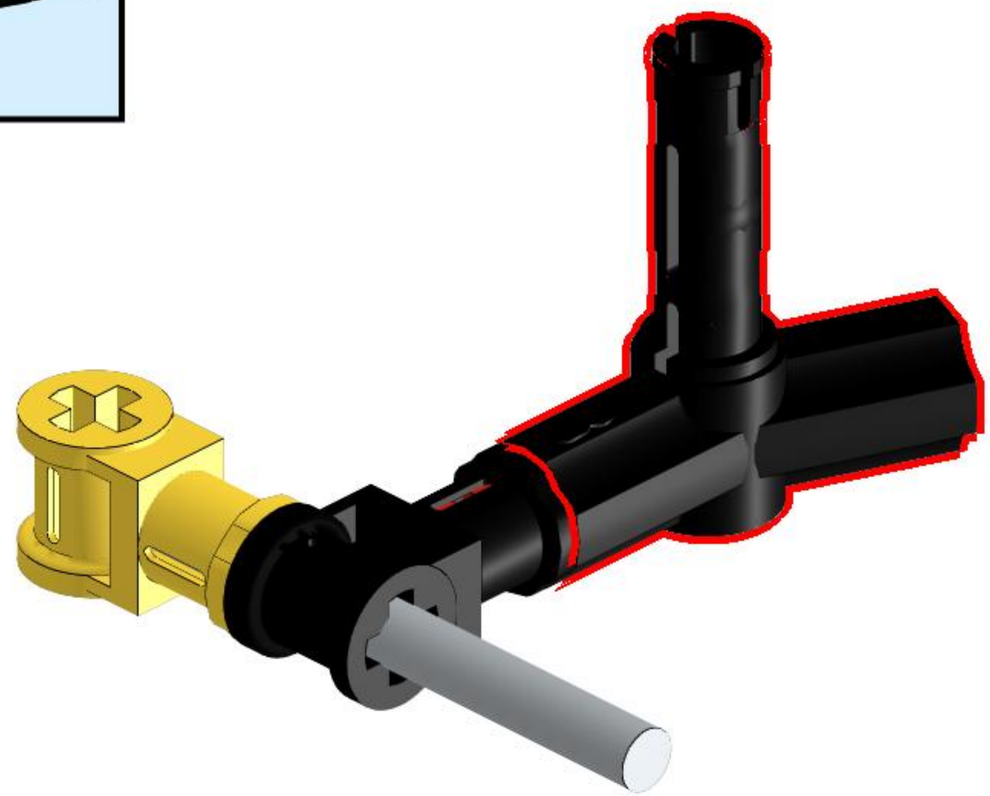

96

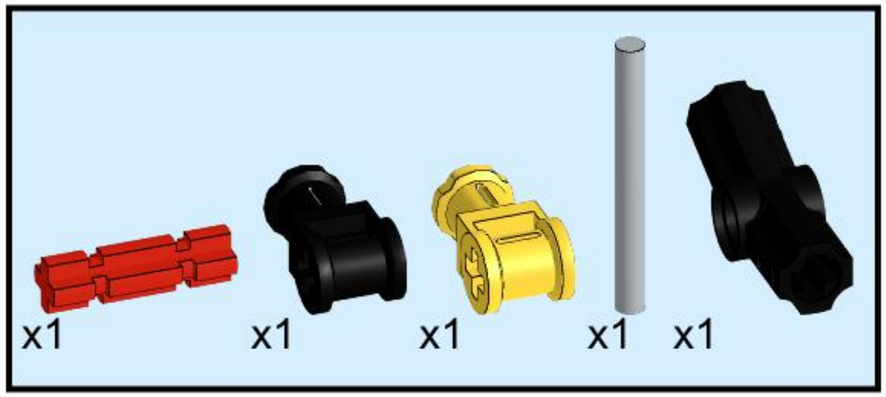

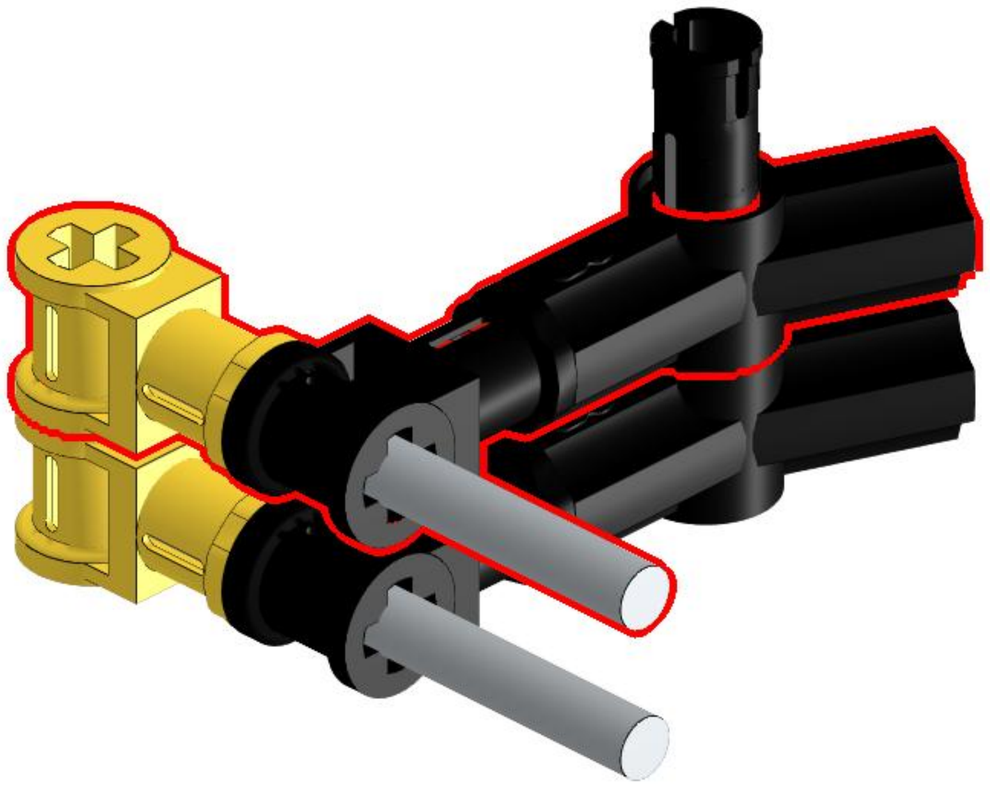

97

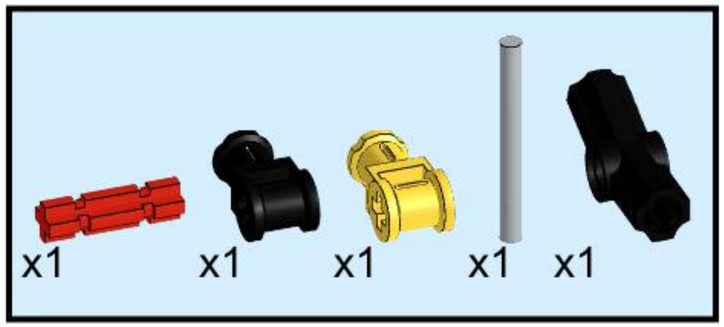

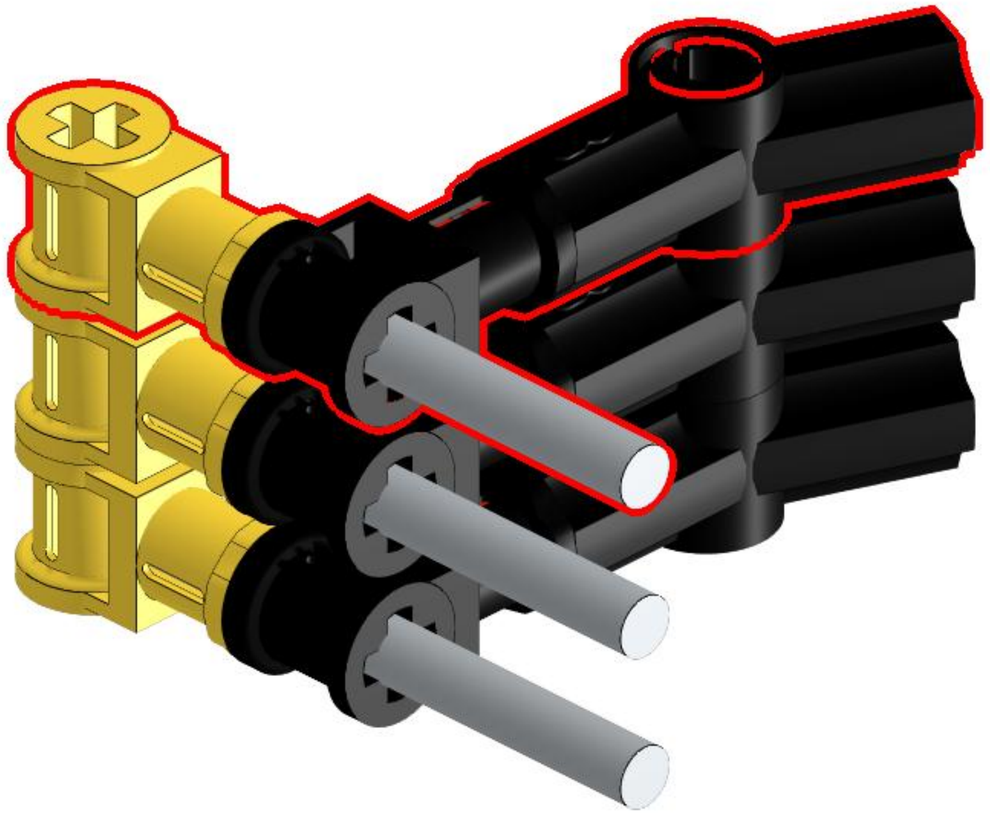

98

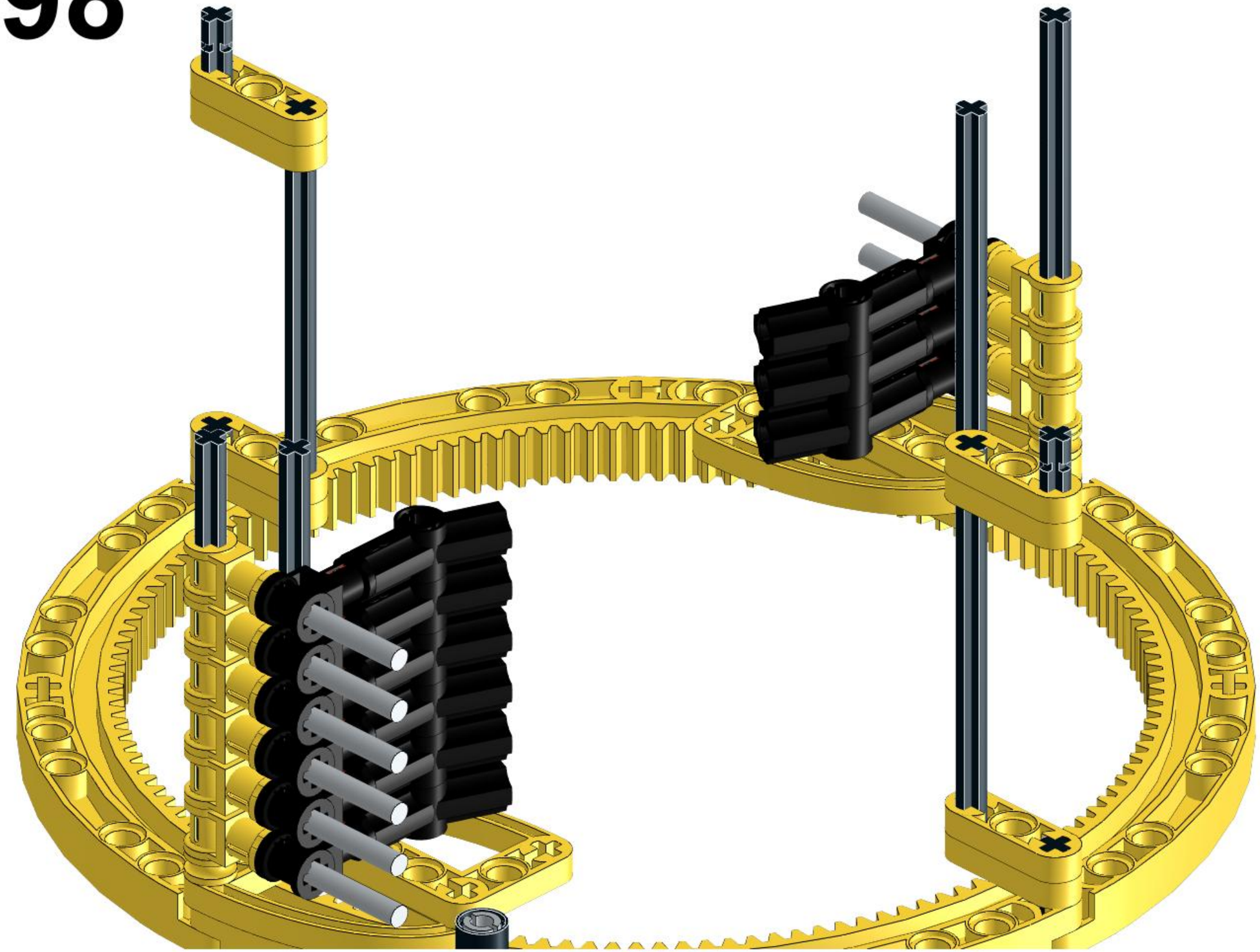

99

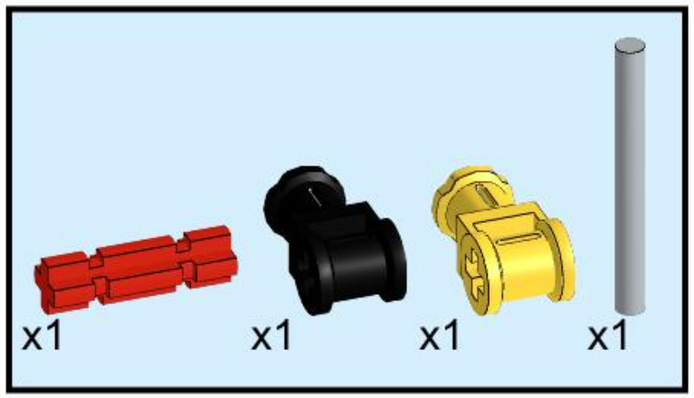

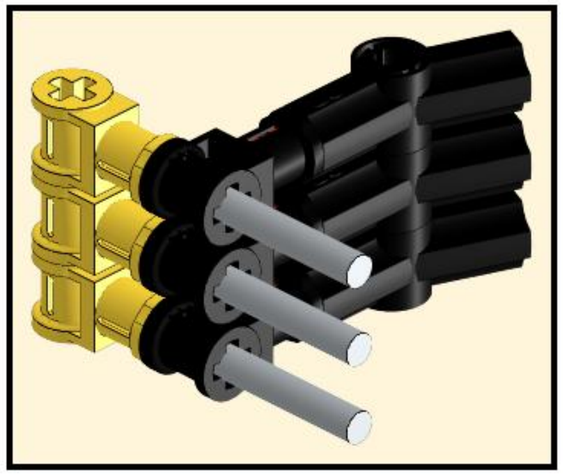

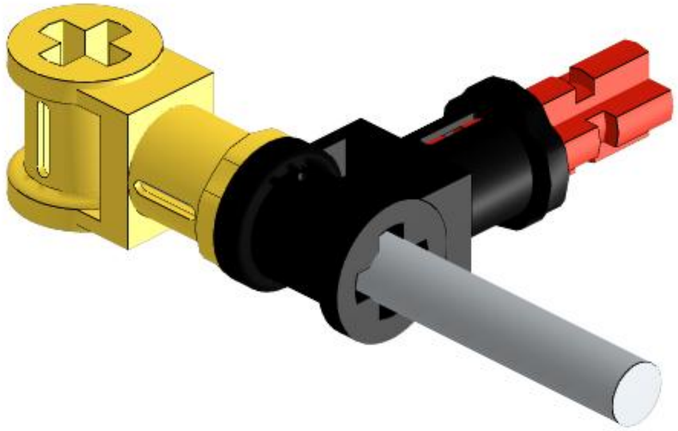

100

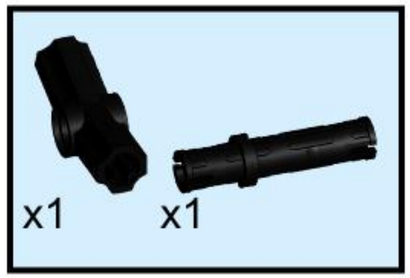

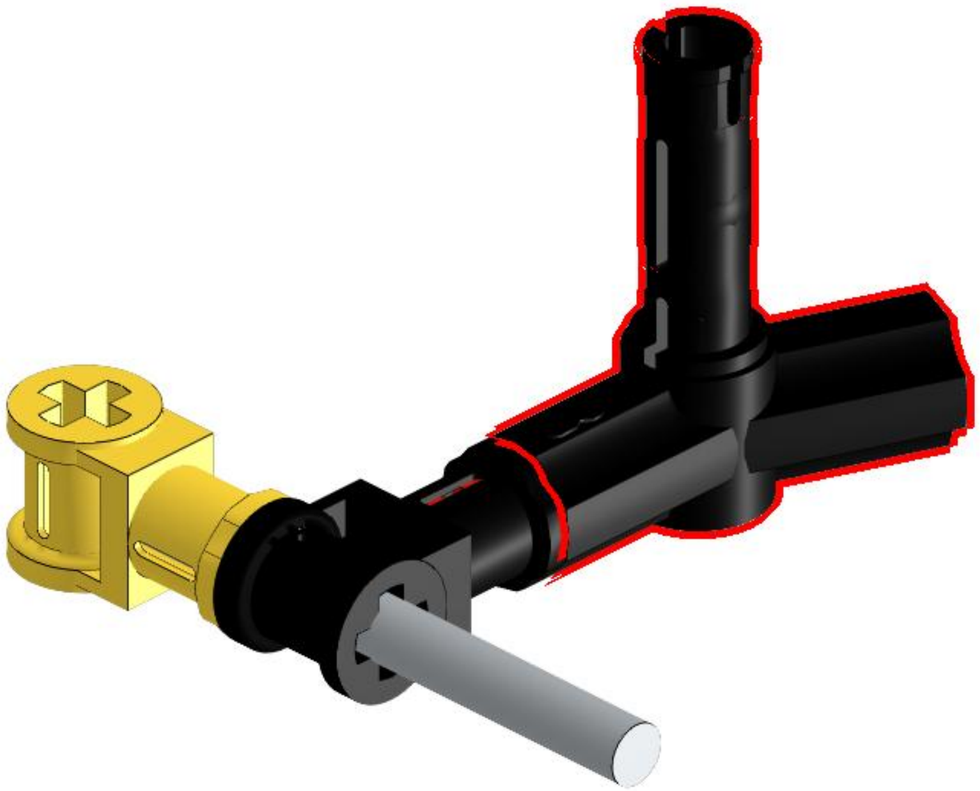

101

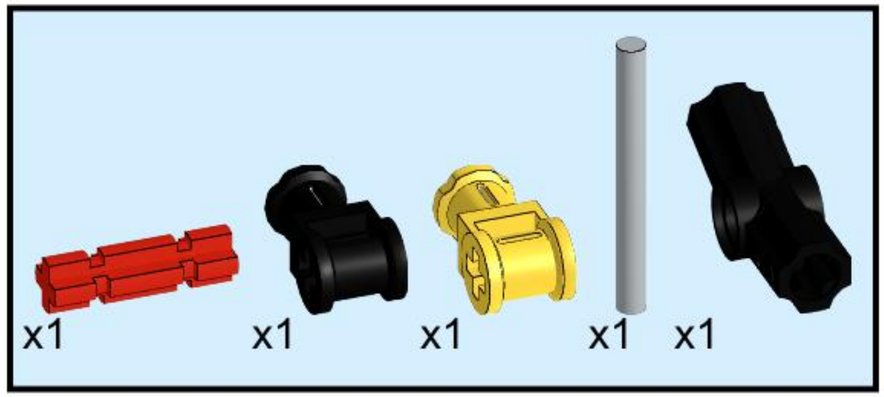

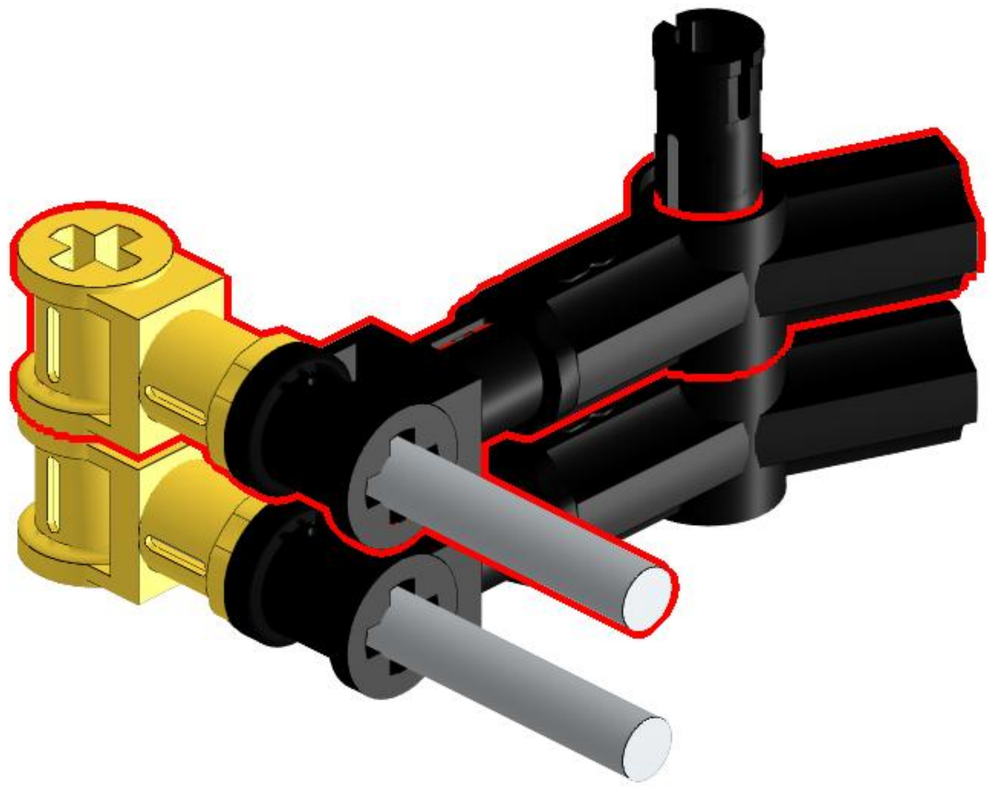

102

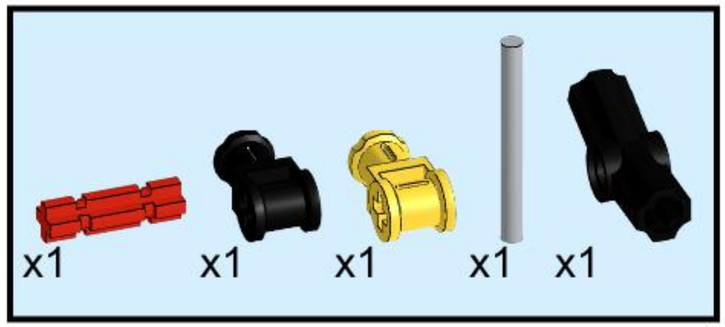

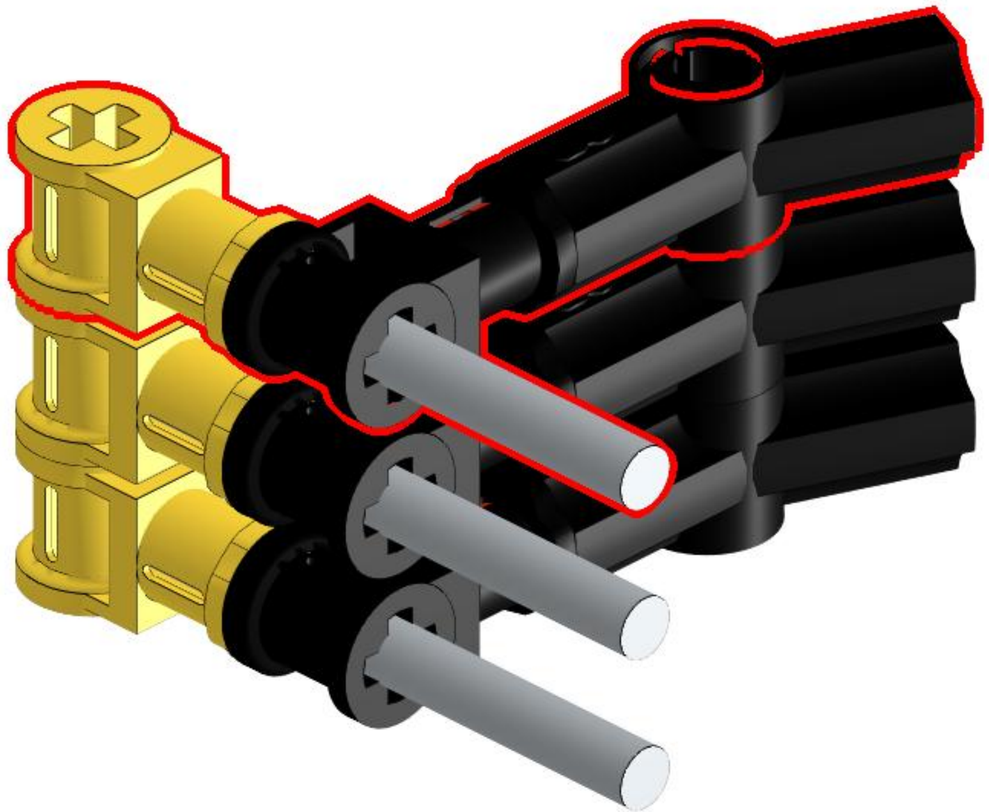

103

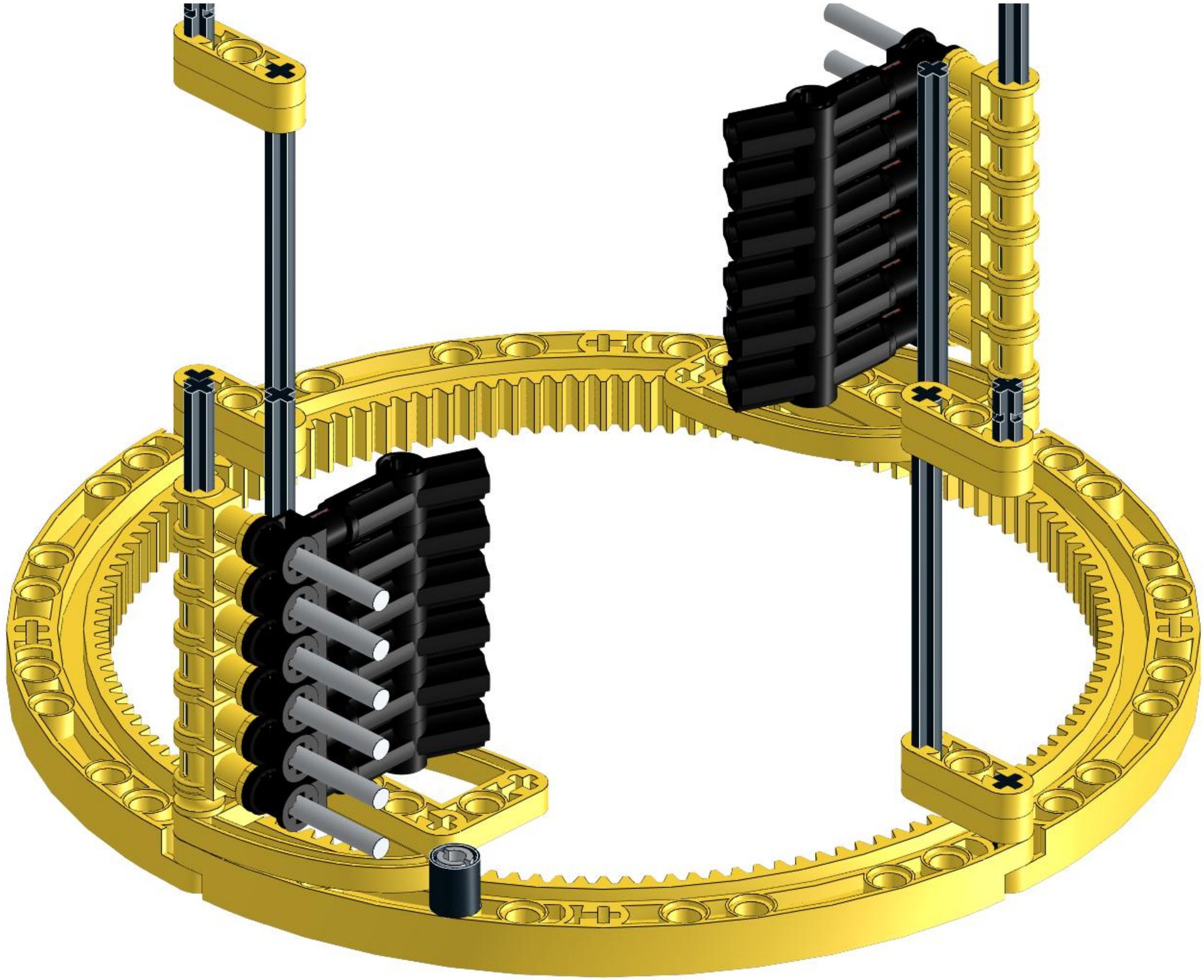

104

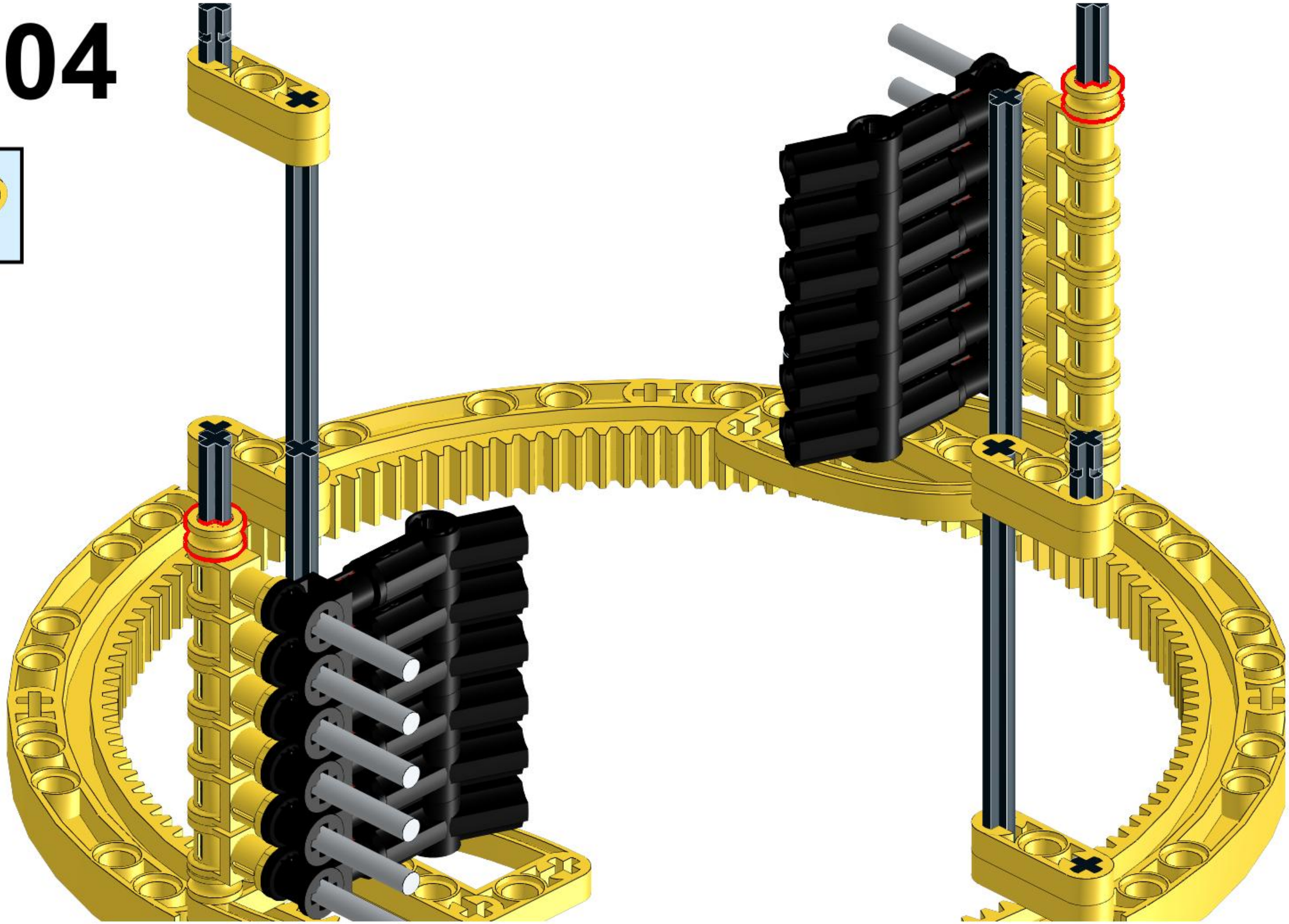

105

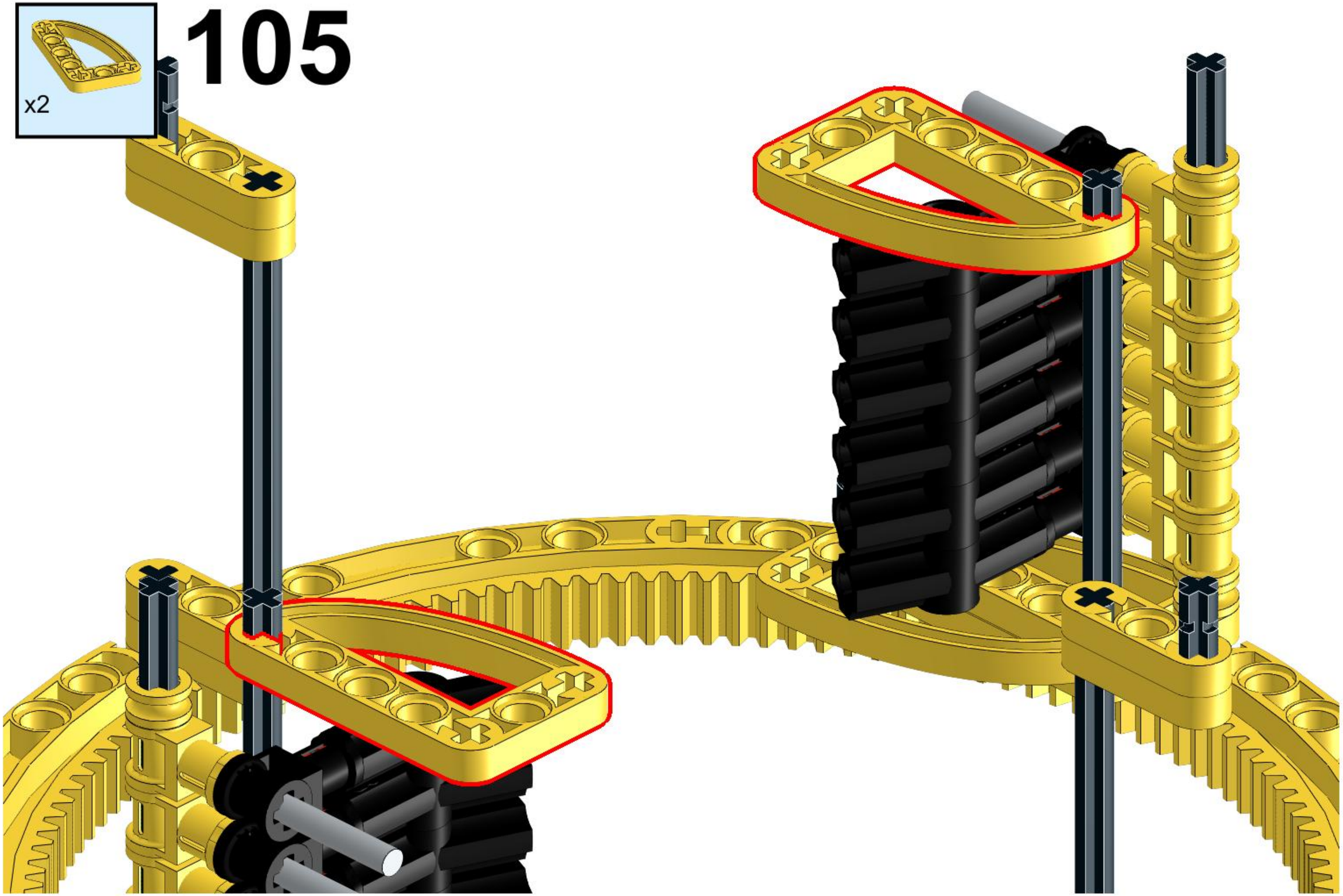

106

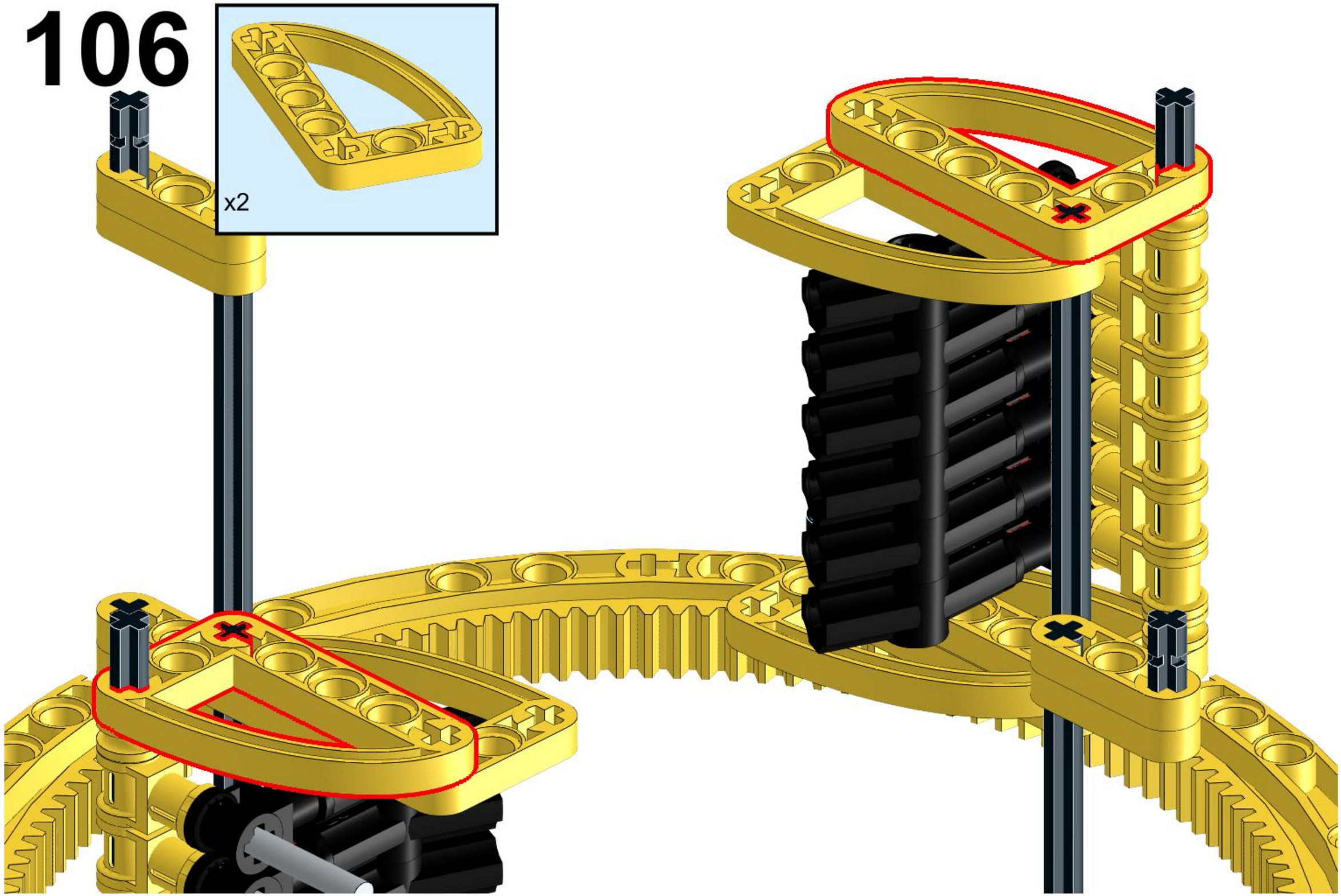

107

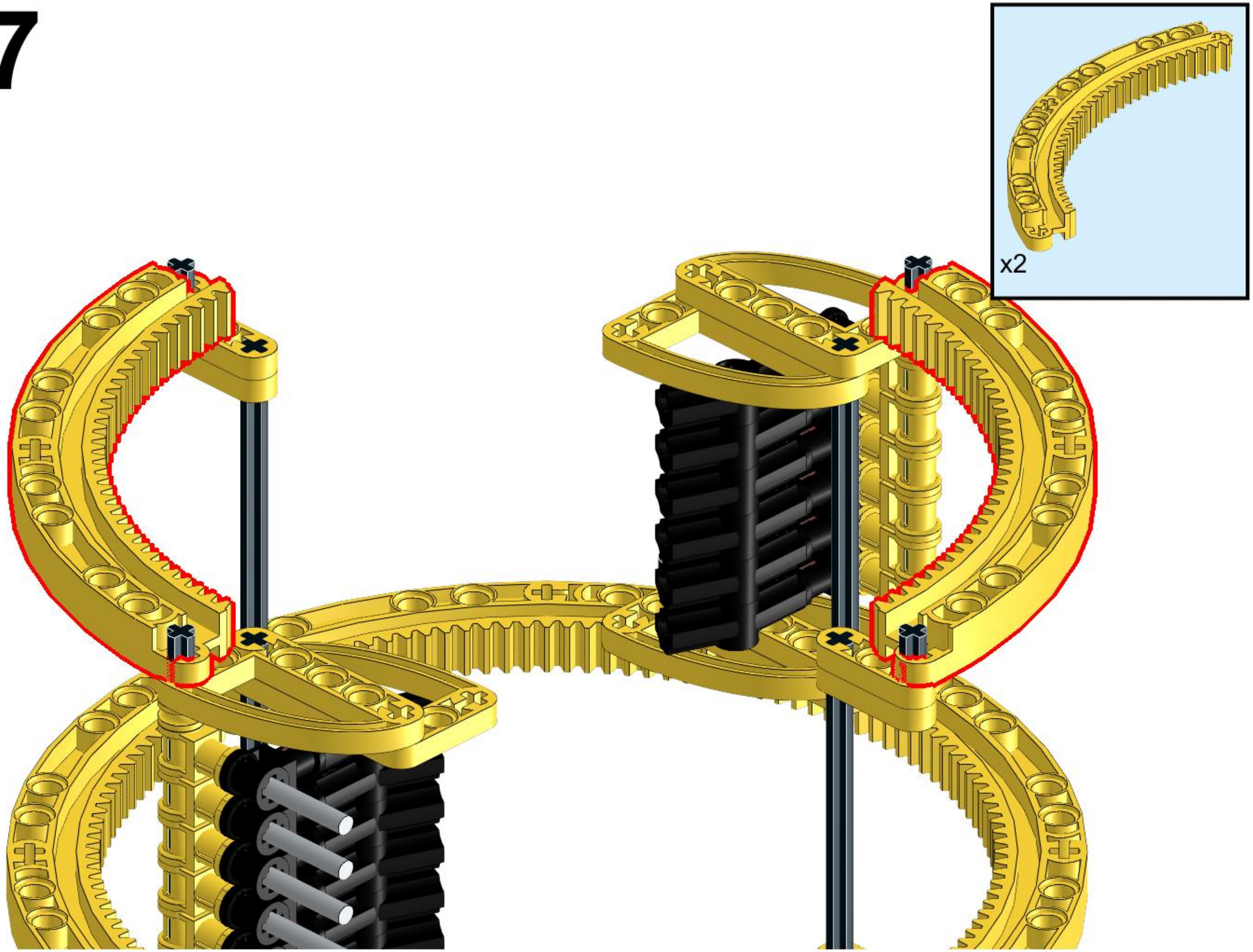

108

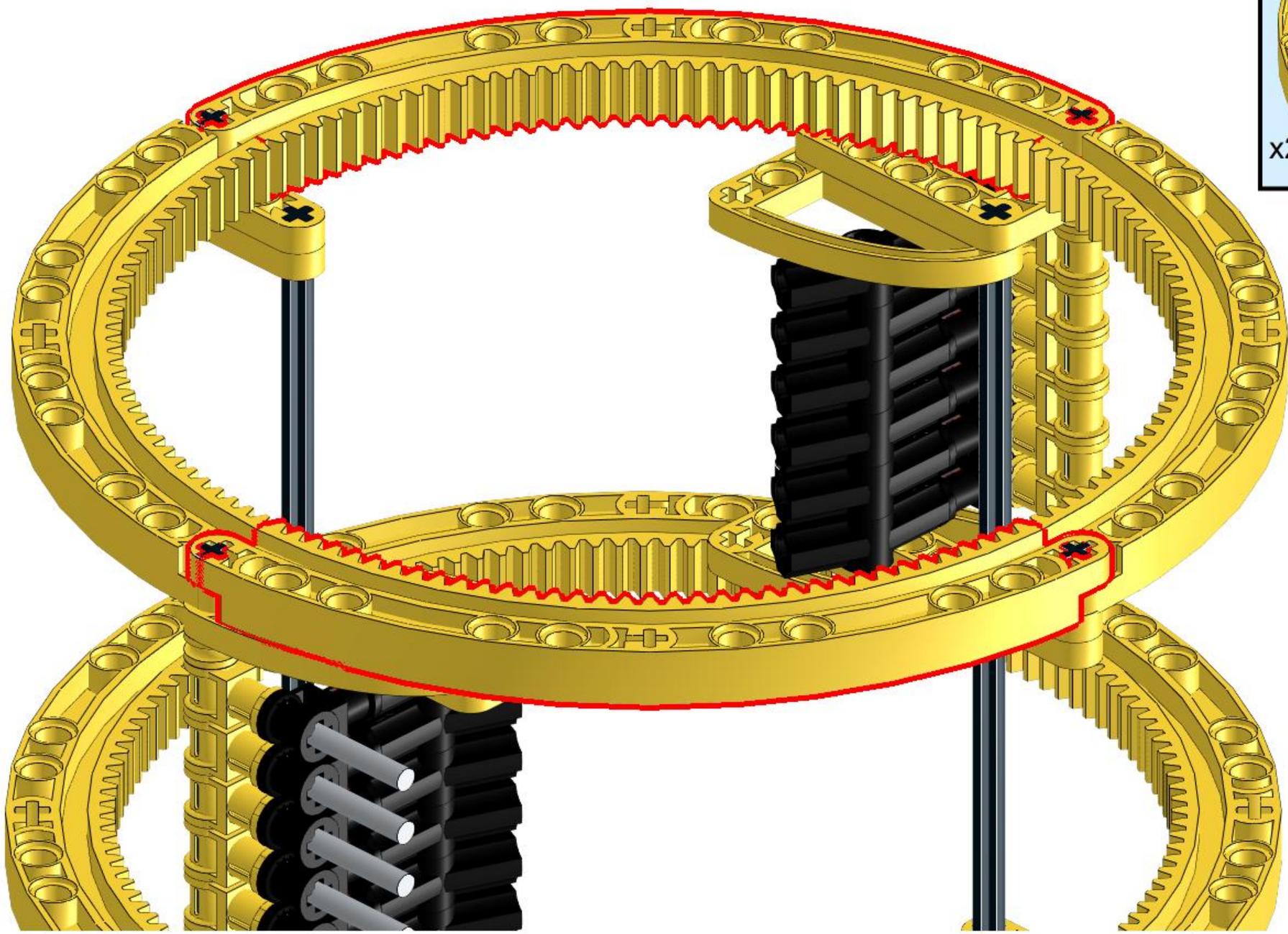

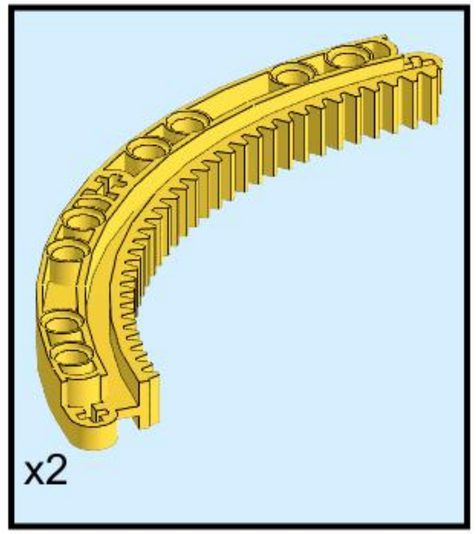

109

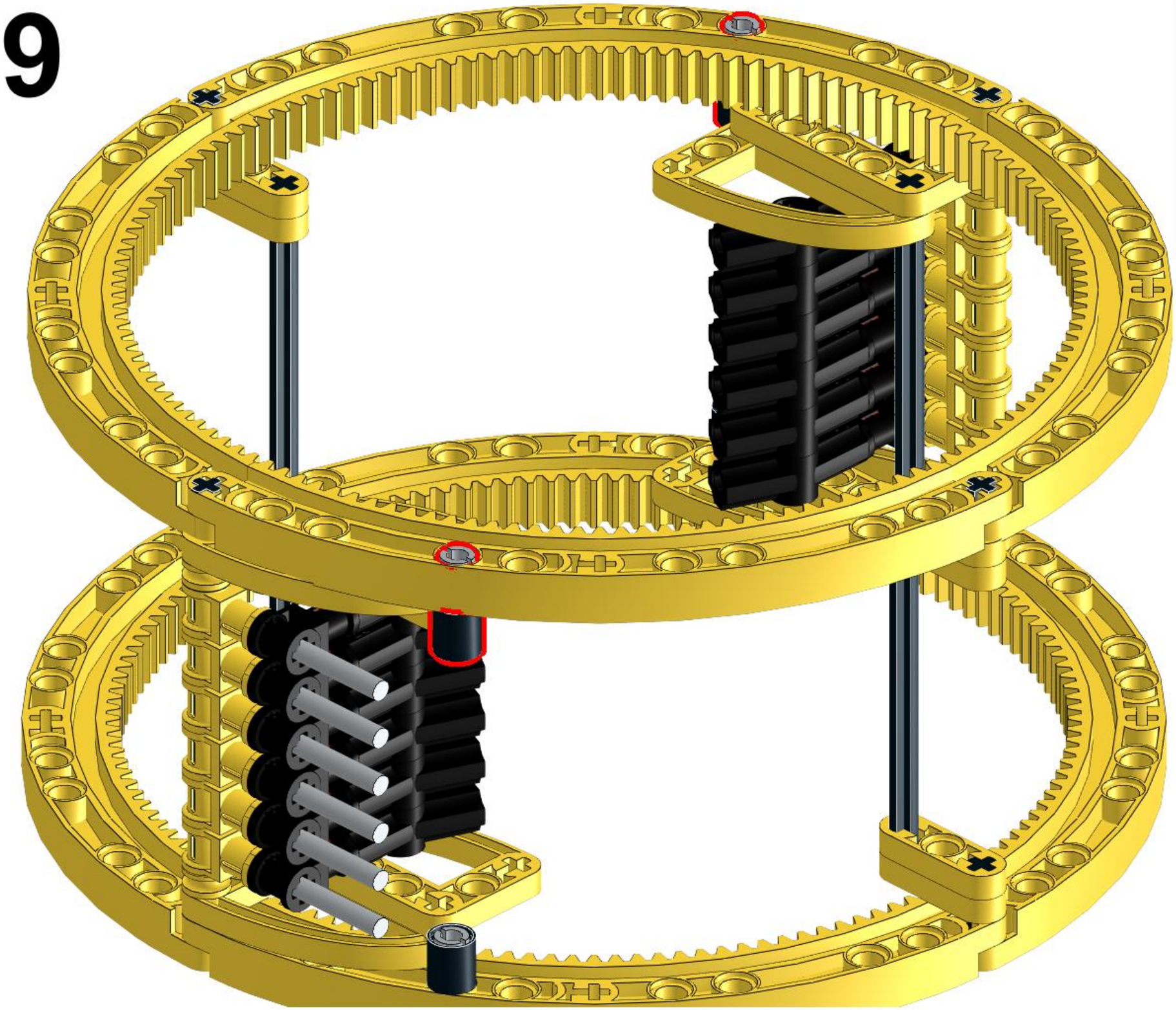

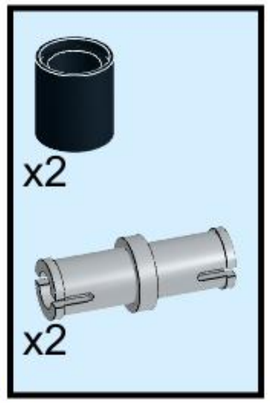

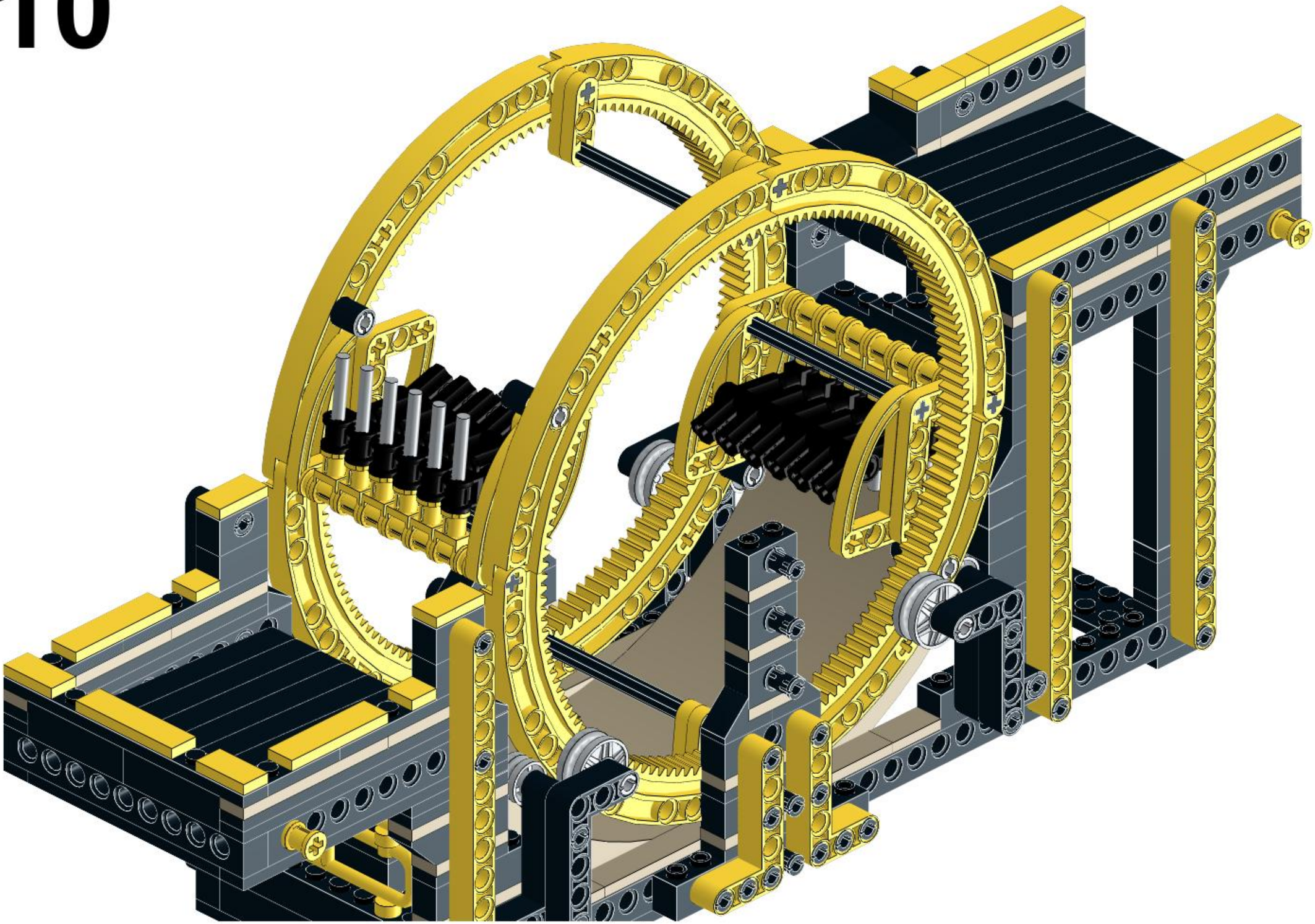

111

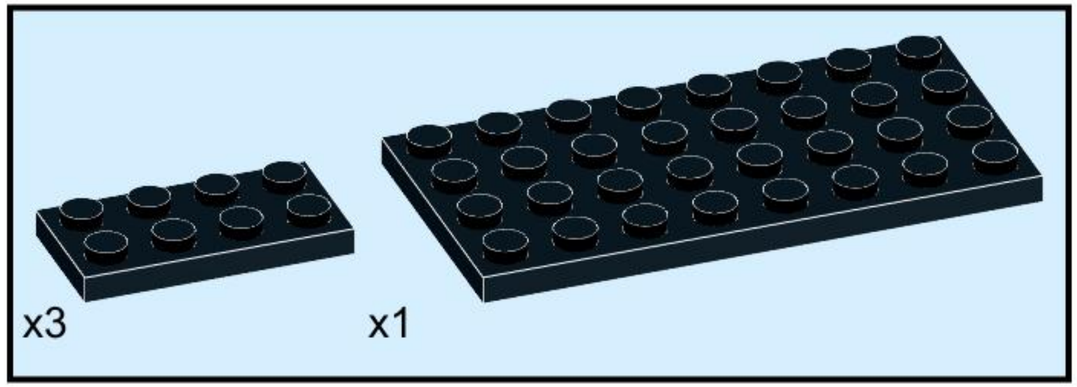

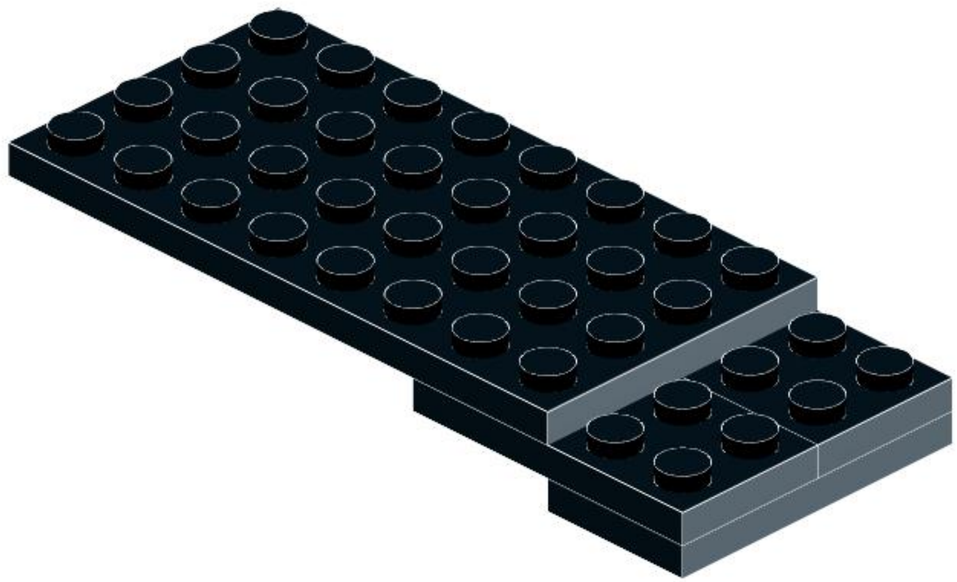

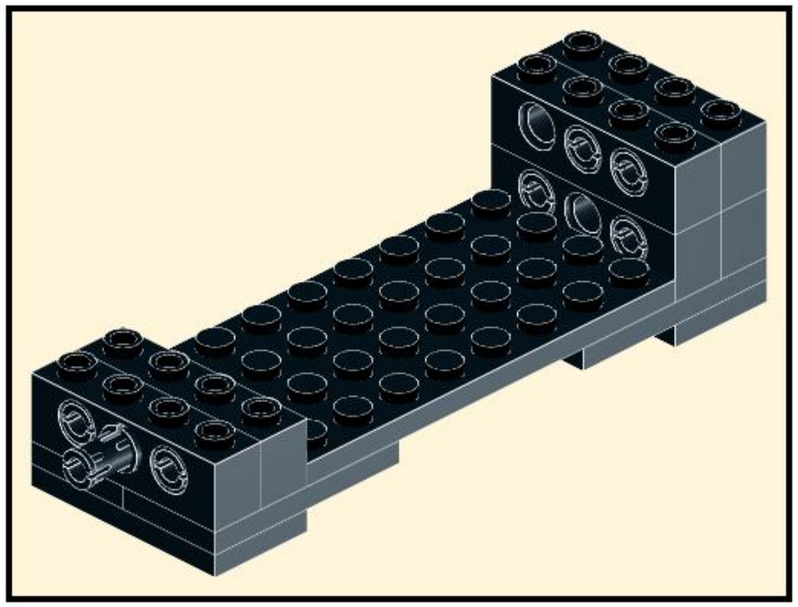

112

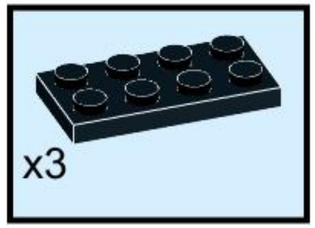

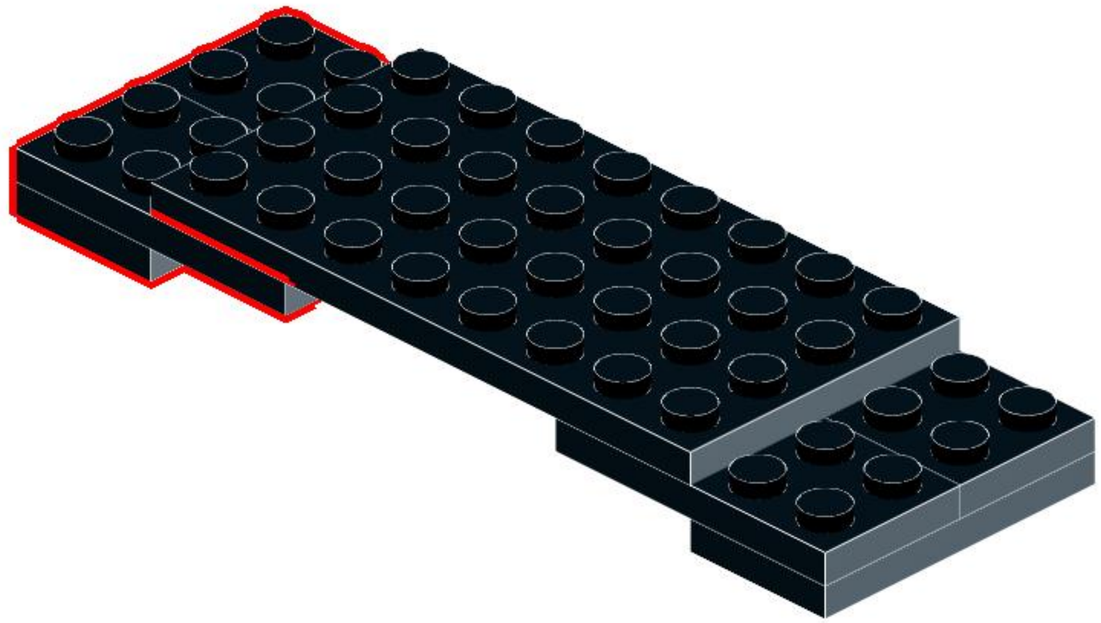

113

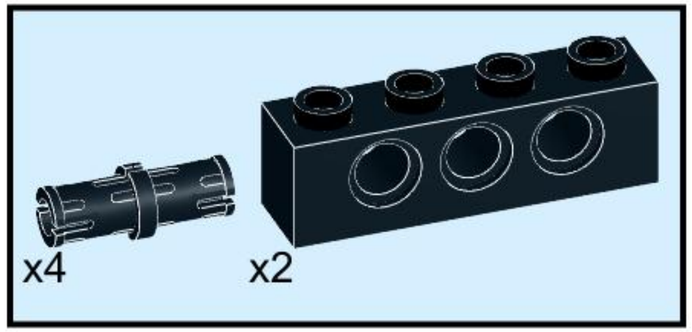

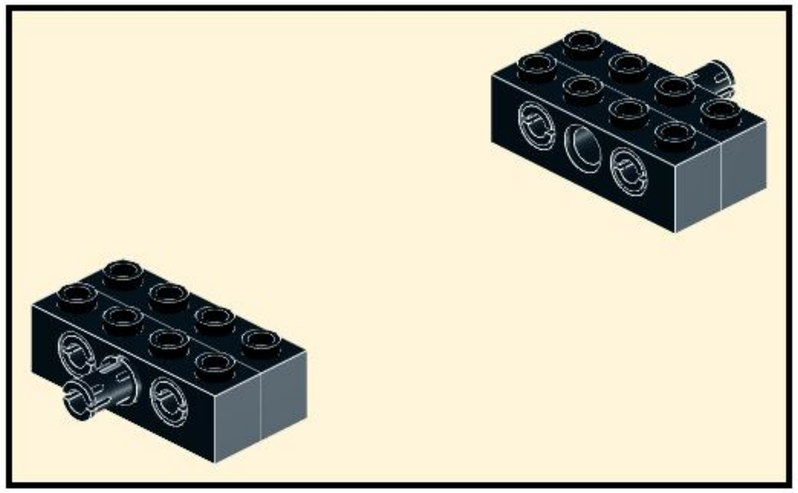

114

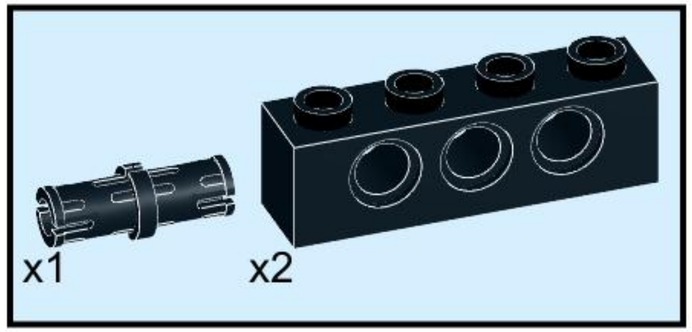

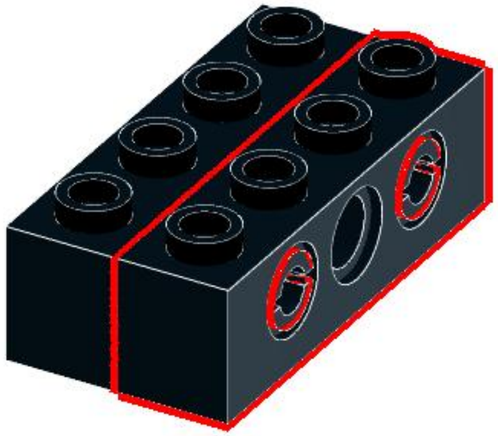

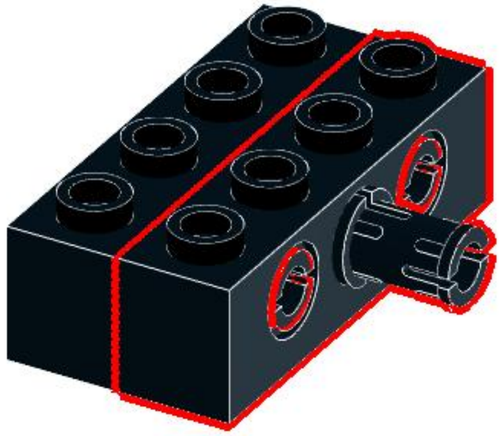

115

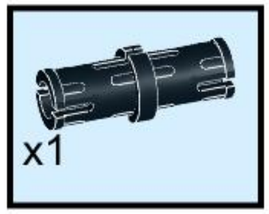

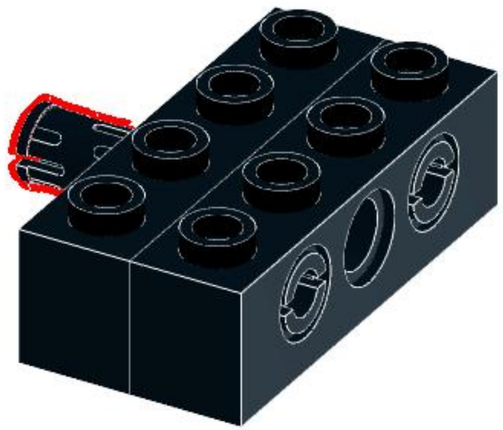

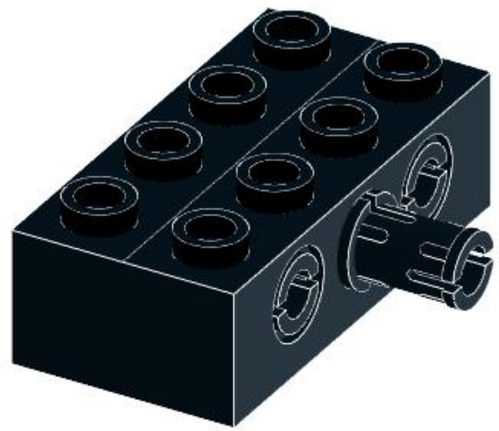

116

117

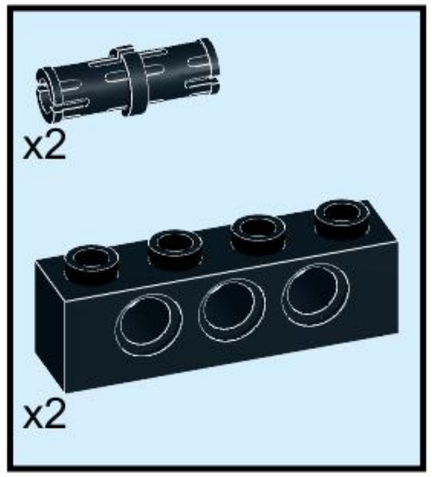

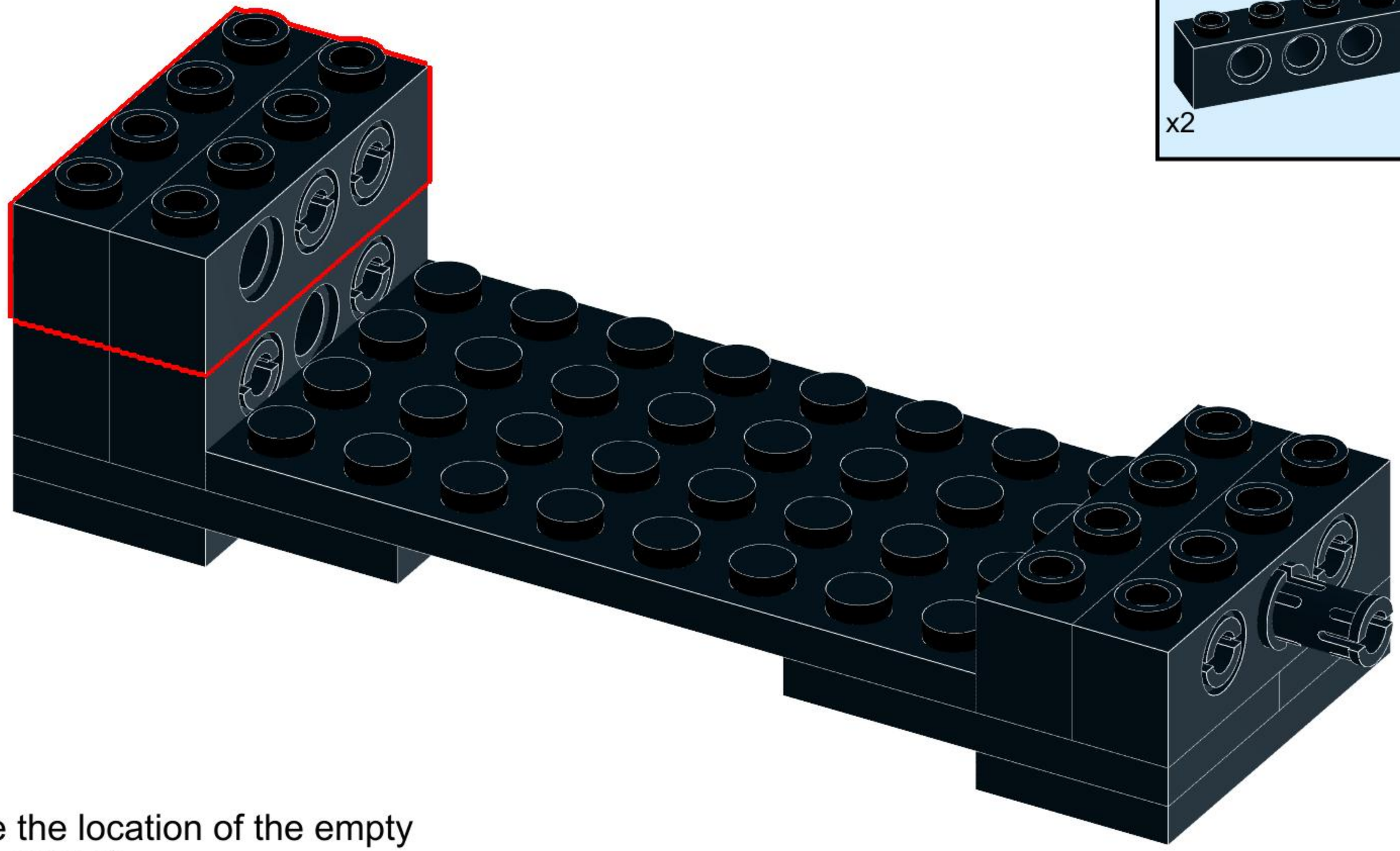

Ensure the location of the empty hole is correct.

118

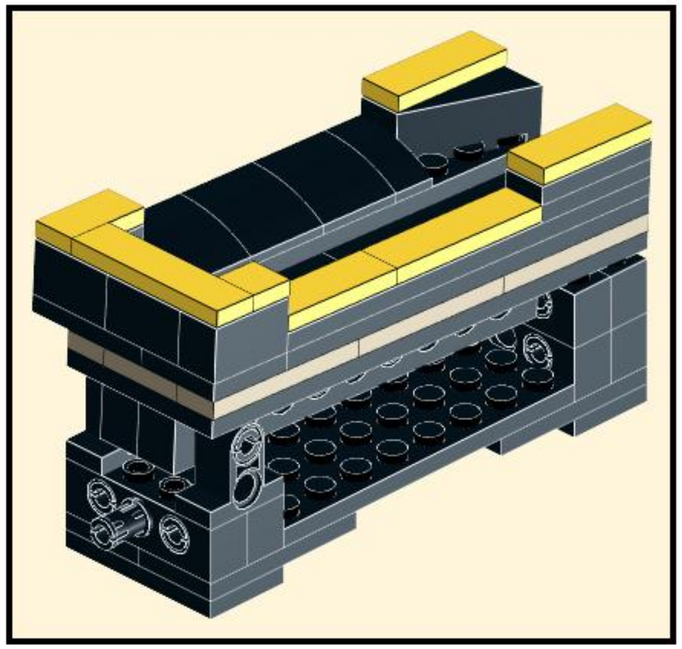

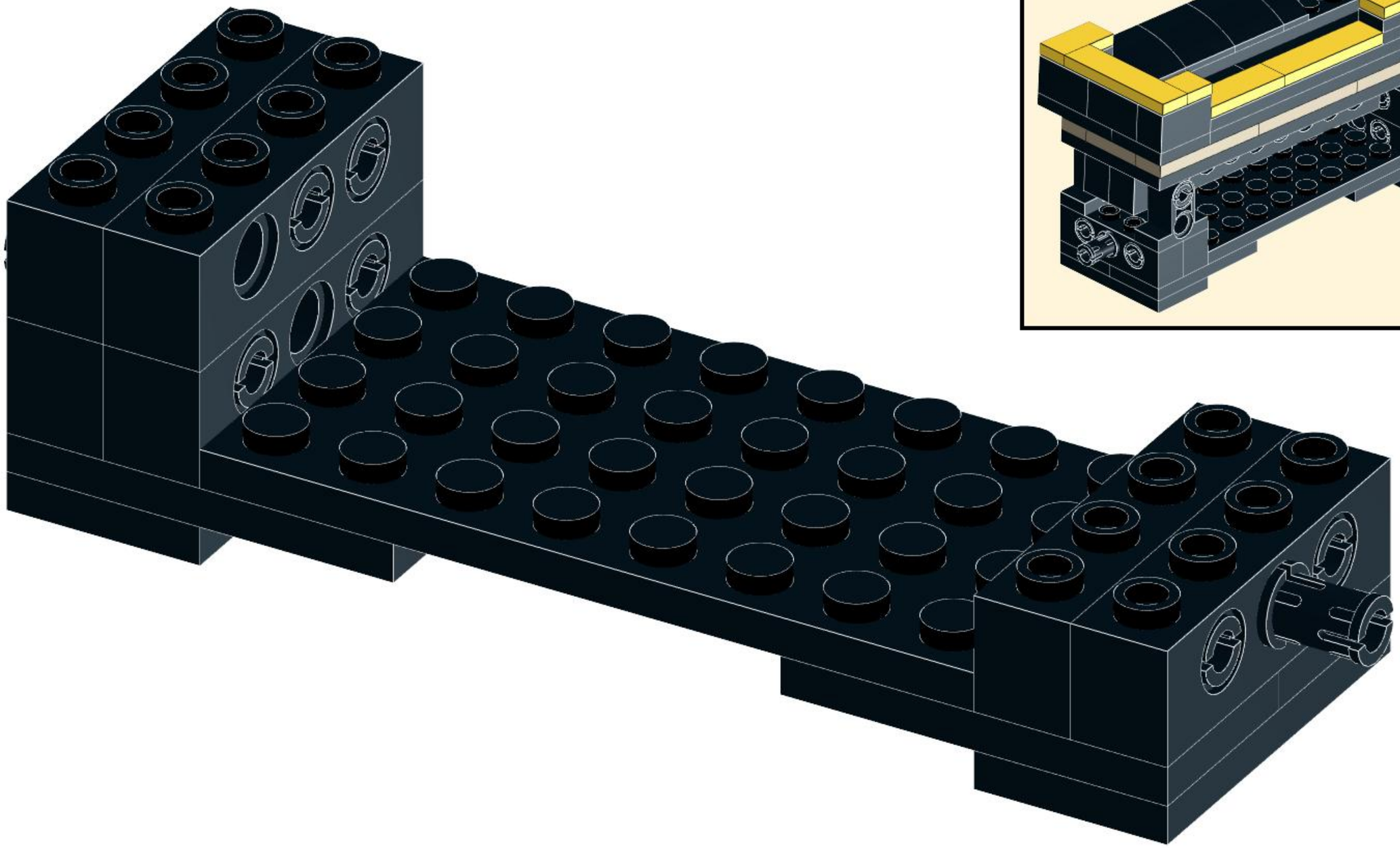

119

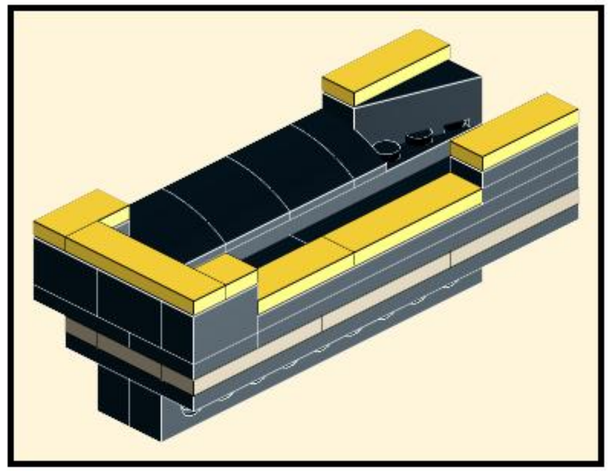

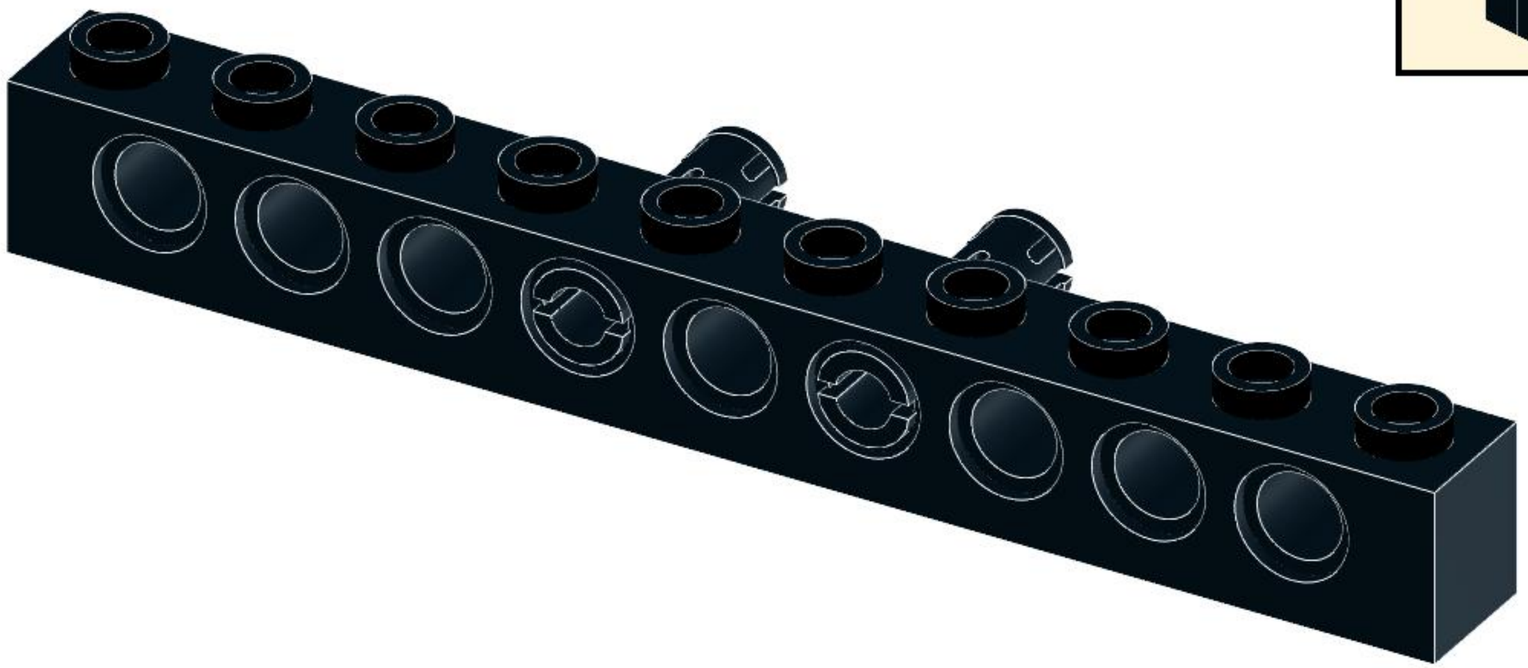

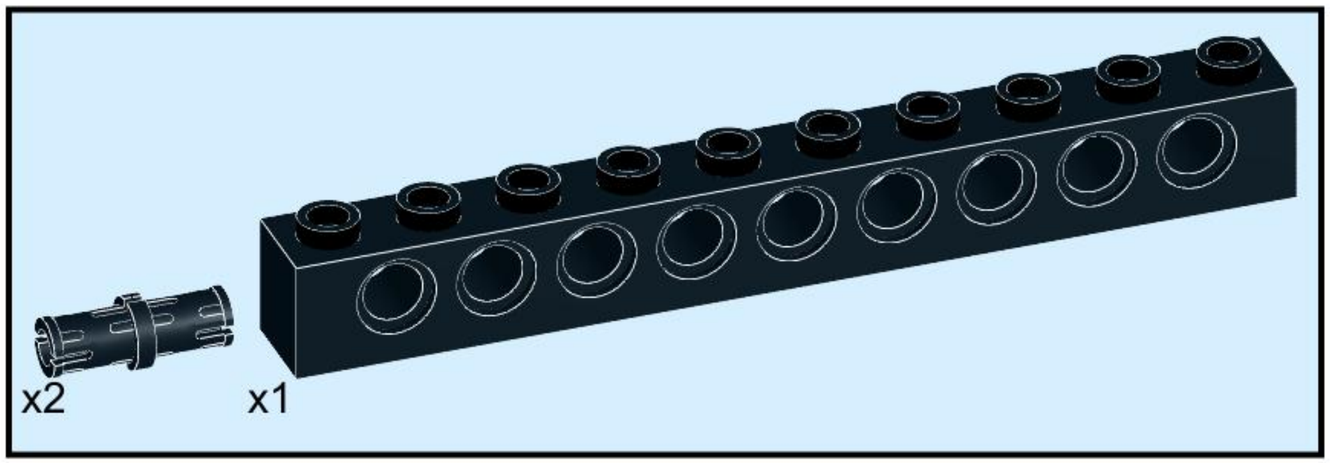

120

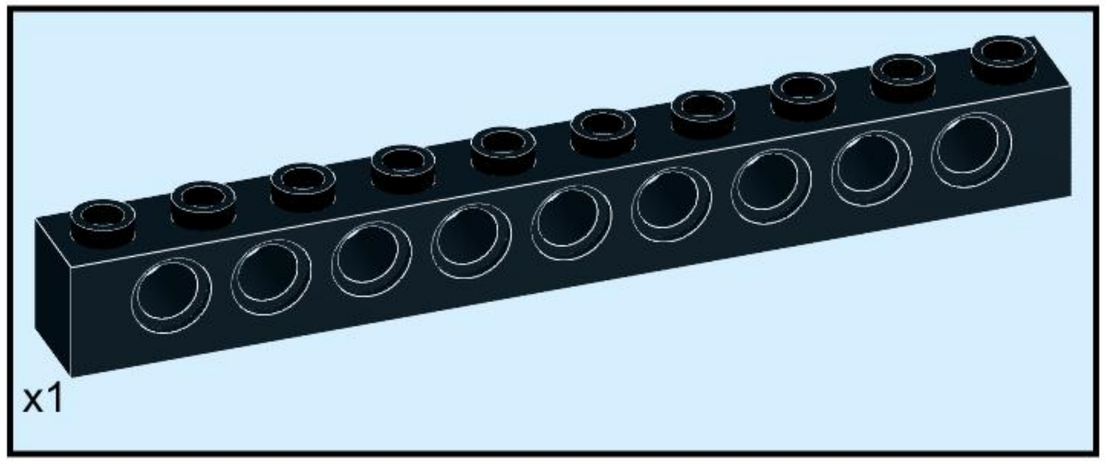

121

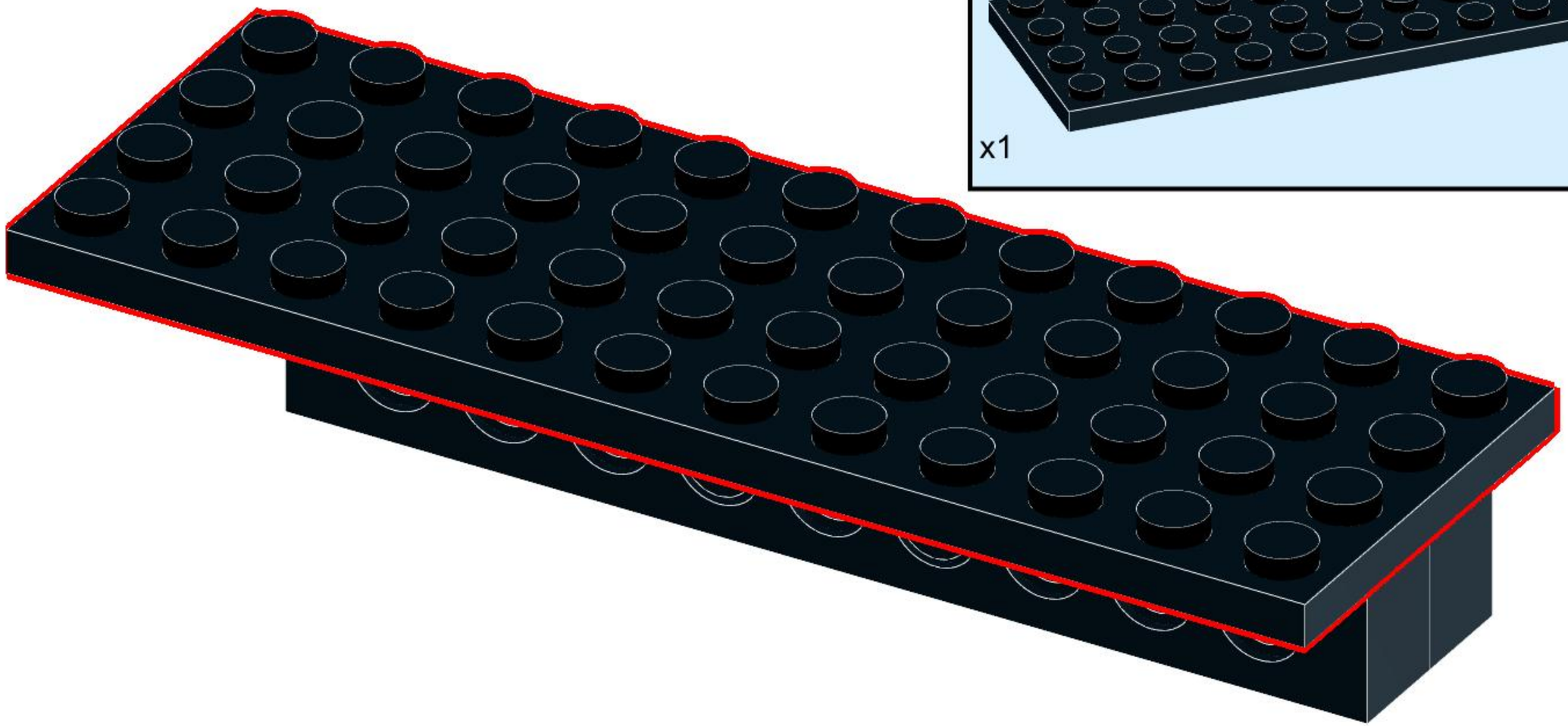

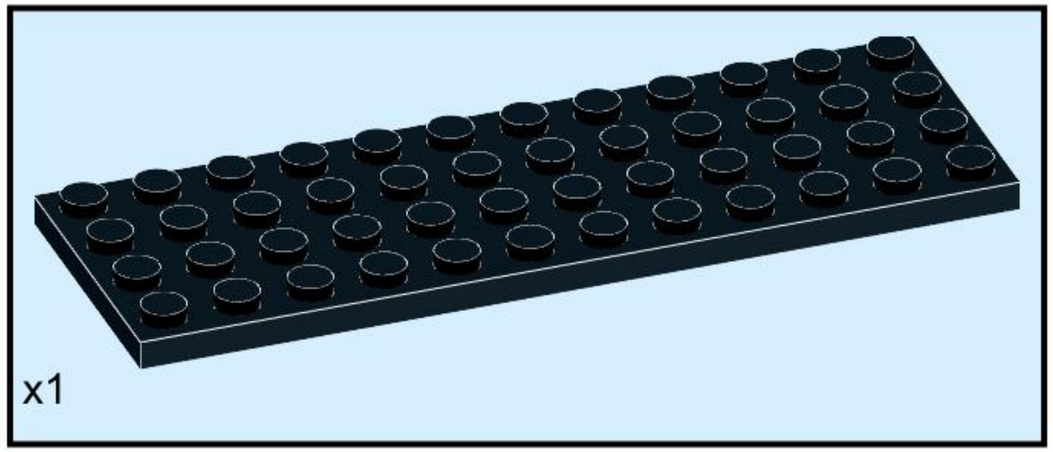

122

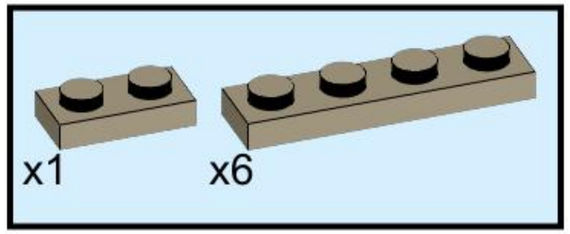

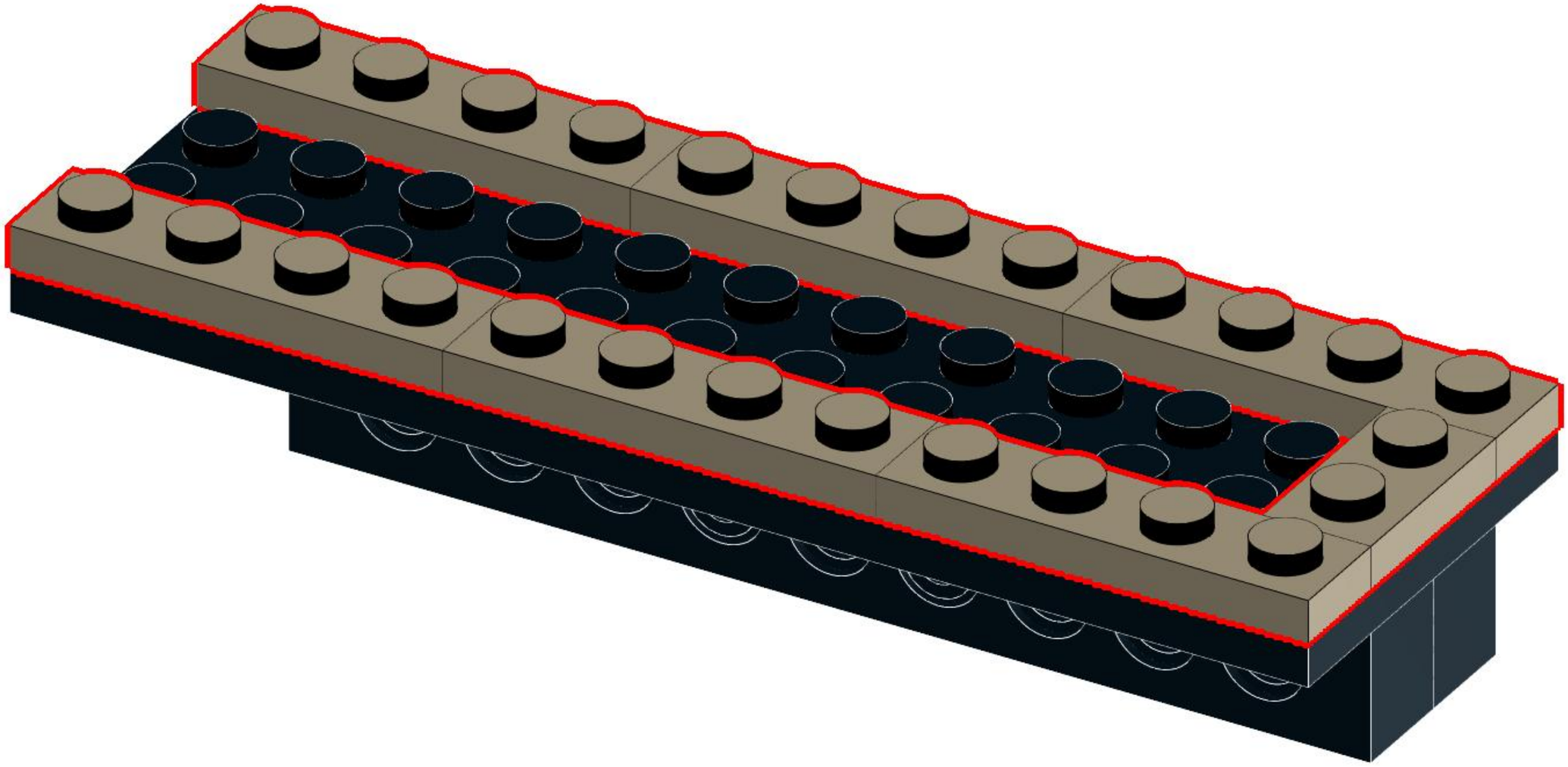

123

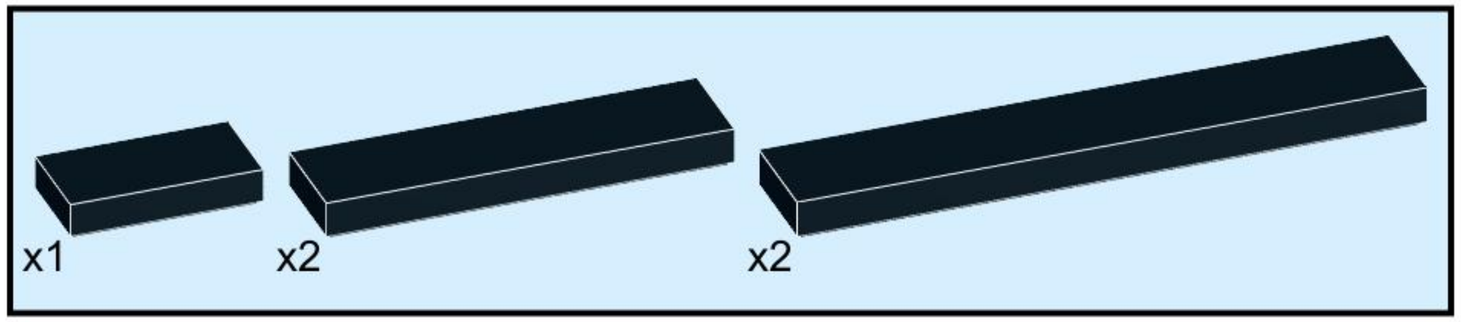

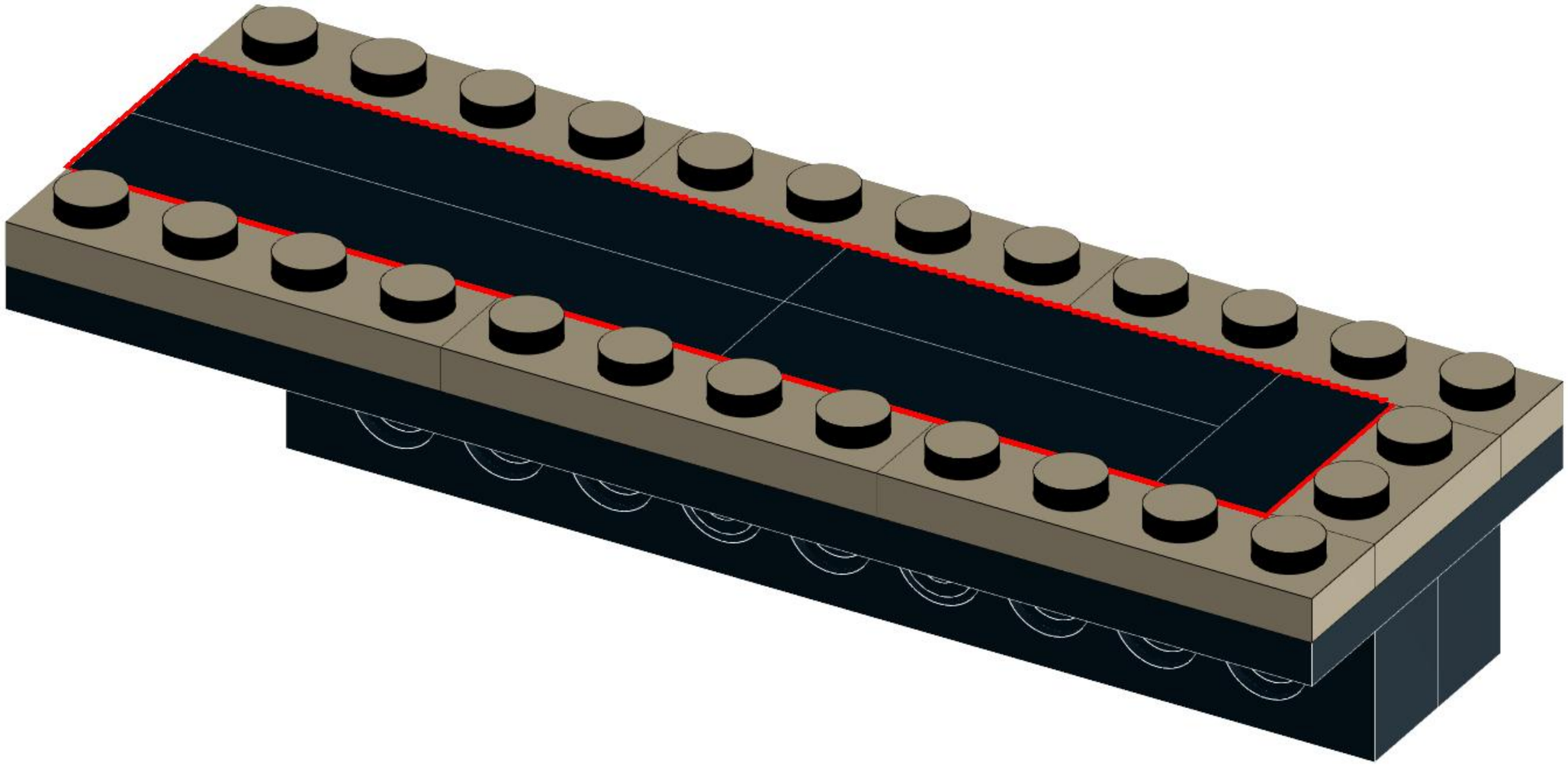

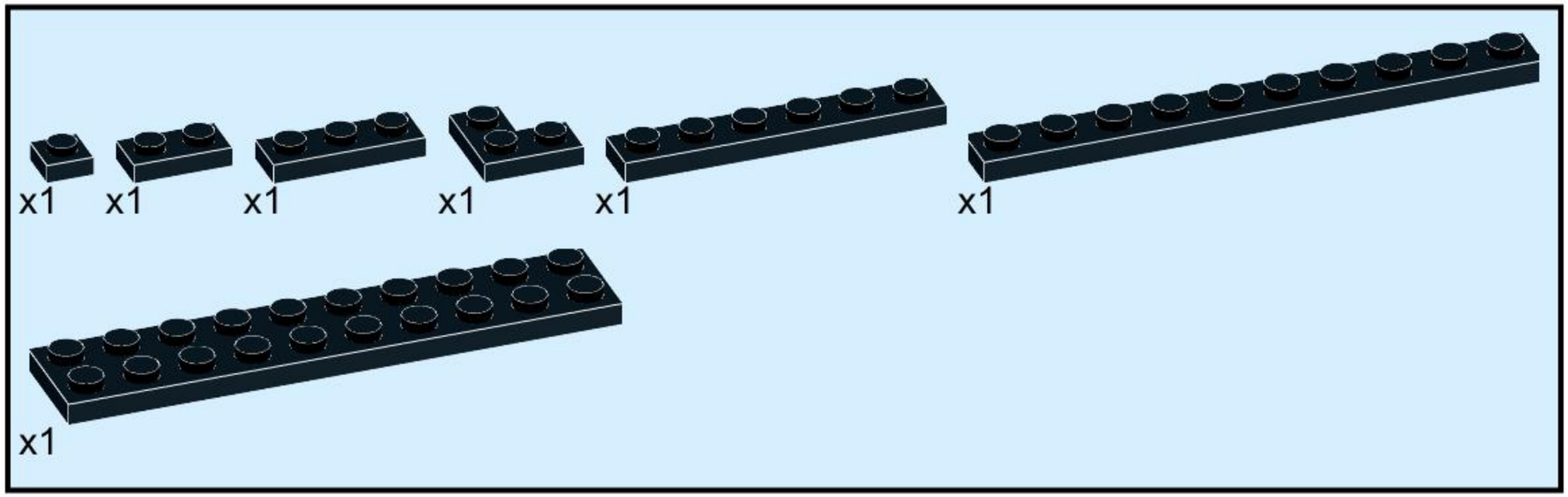
x1
x1
x1
x1
x1
x1
x1

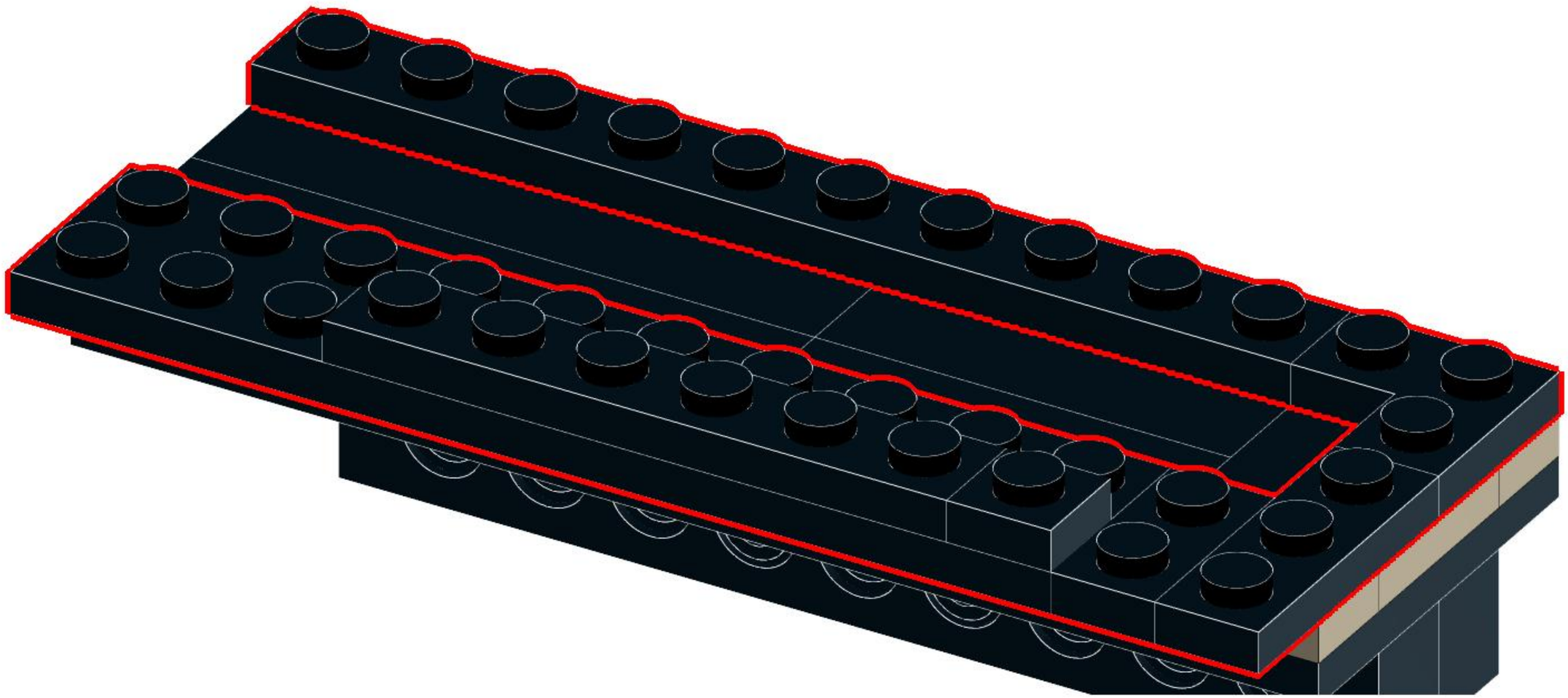

125

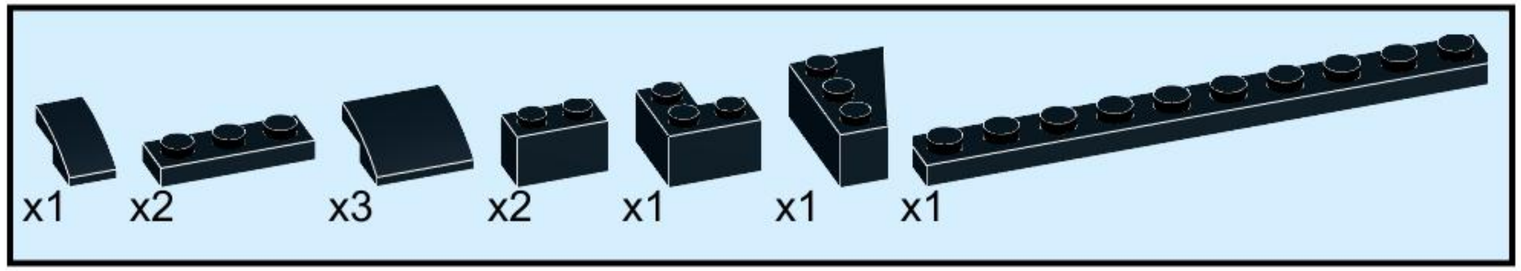

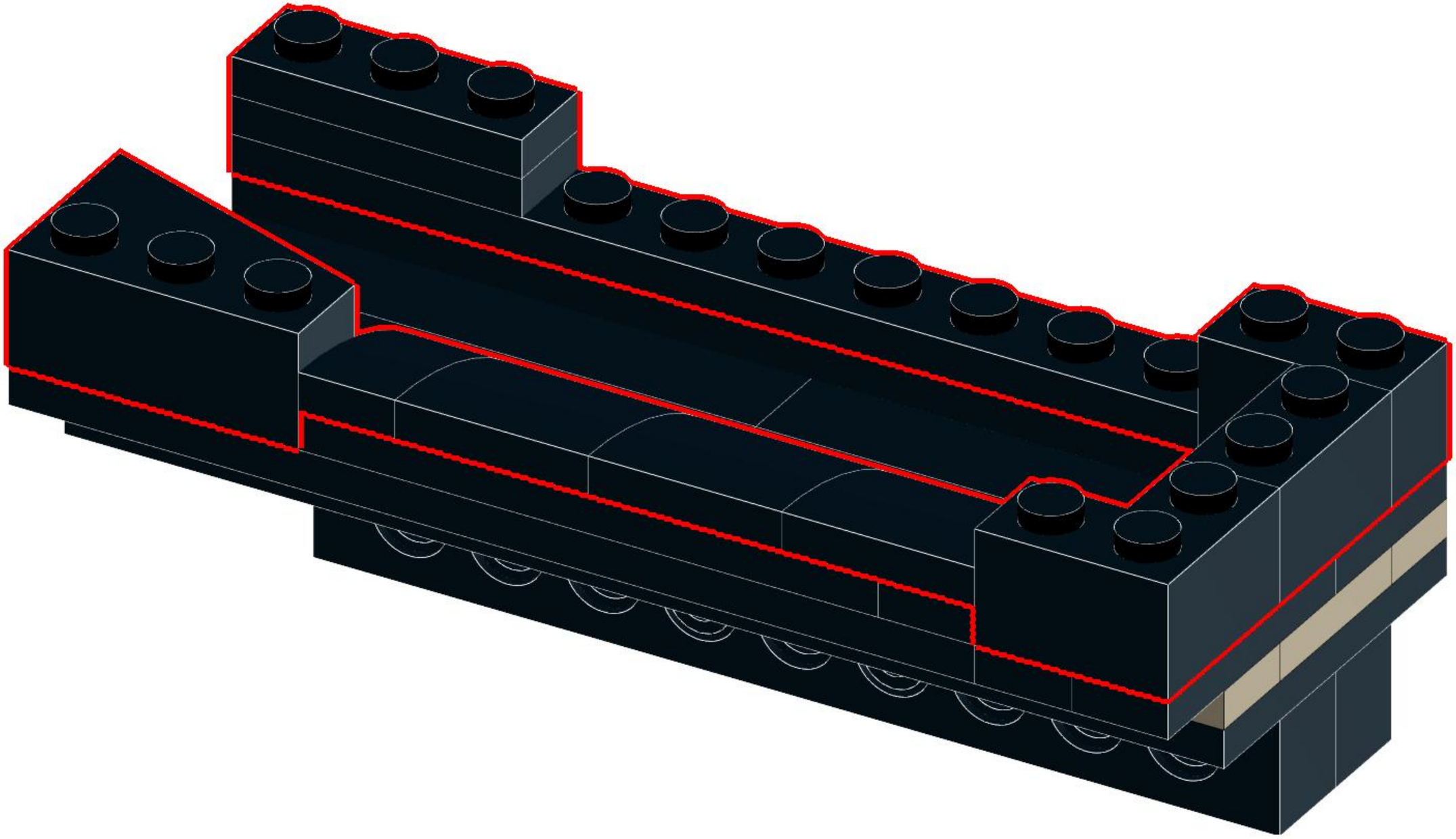

126

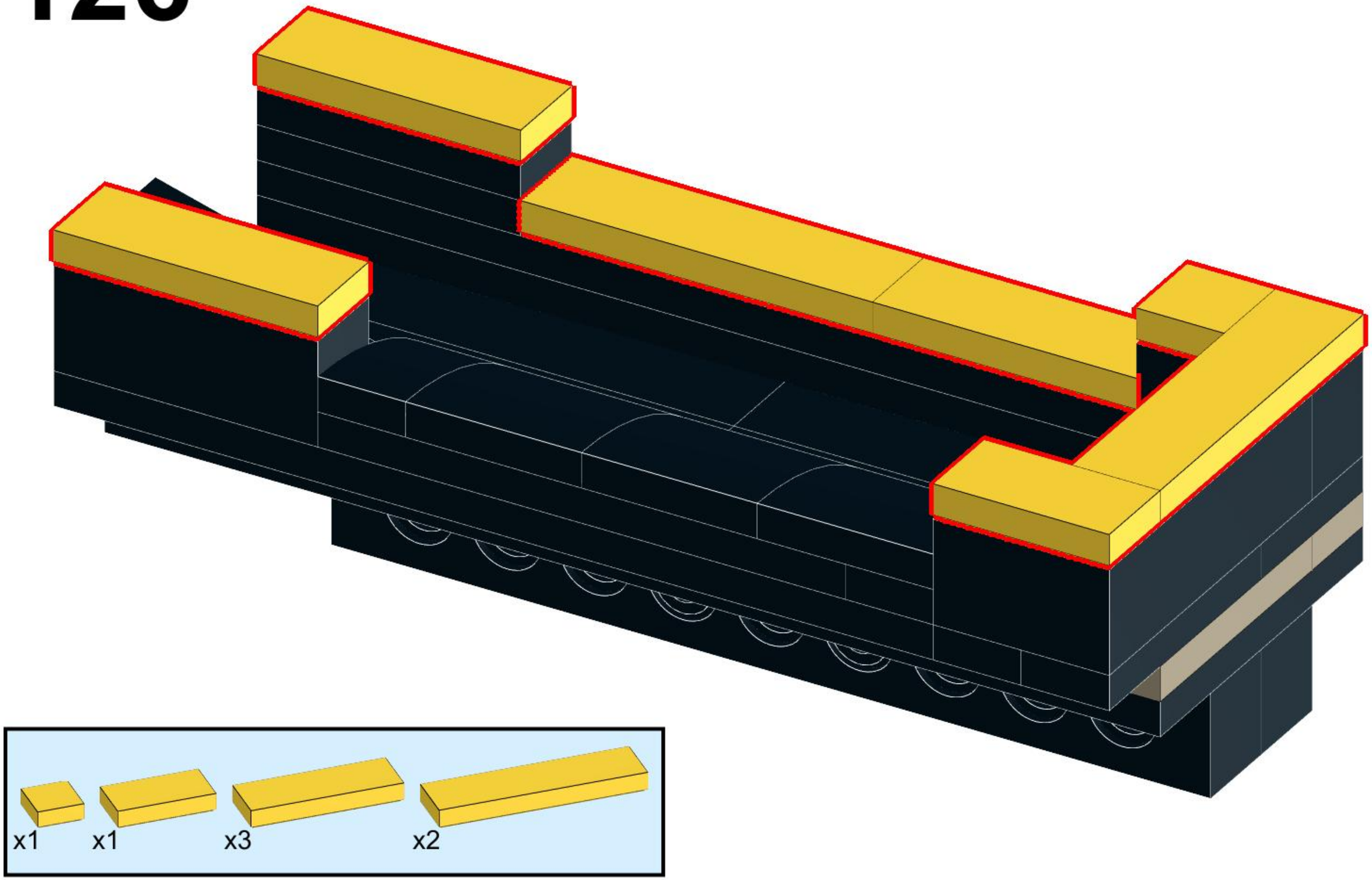

127

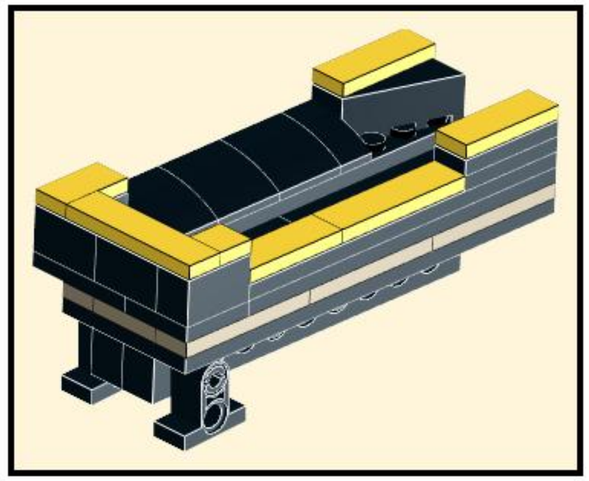

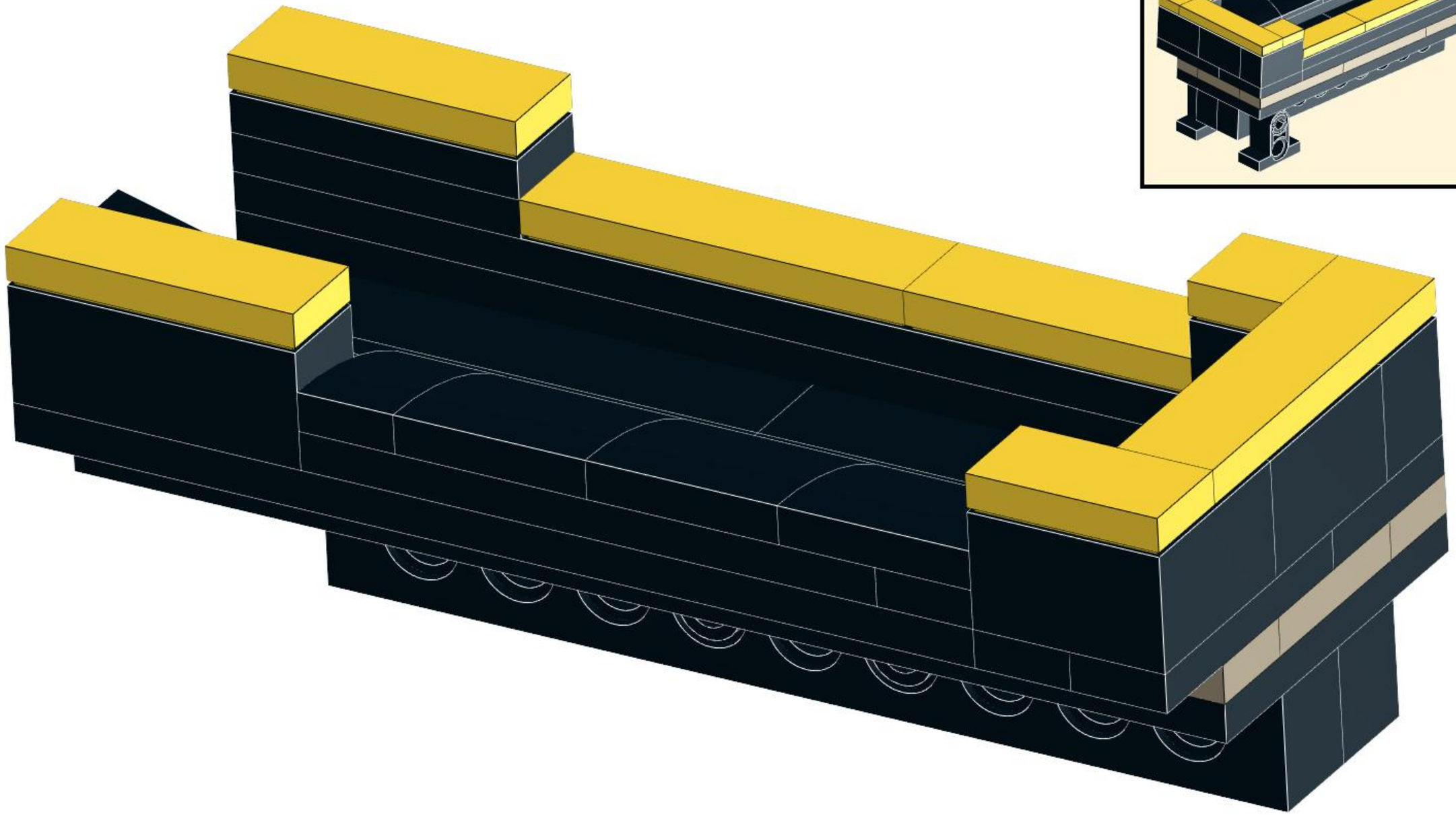

128

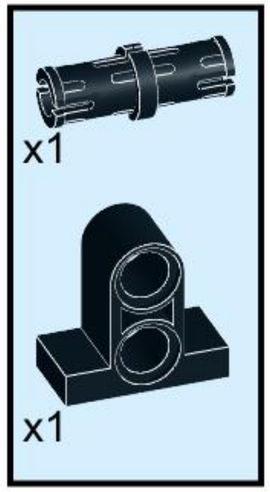

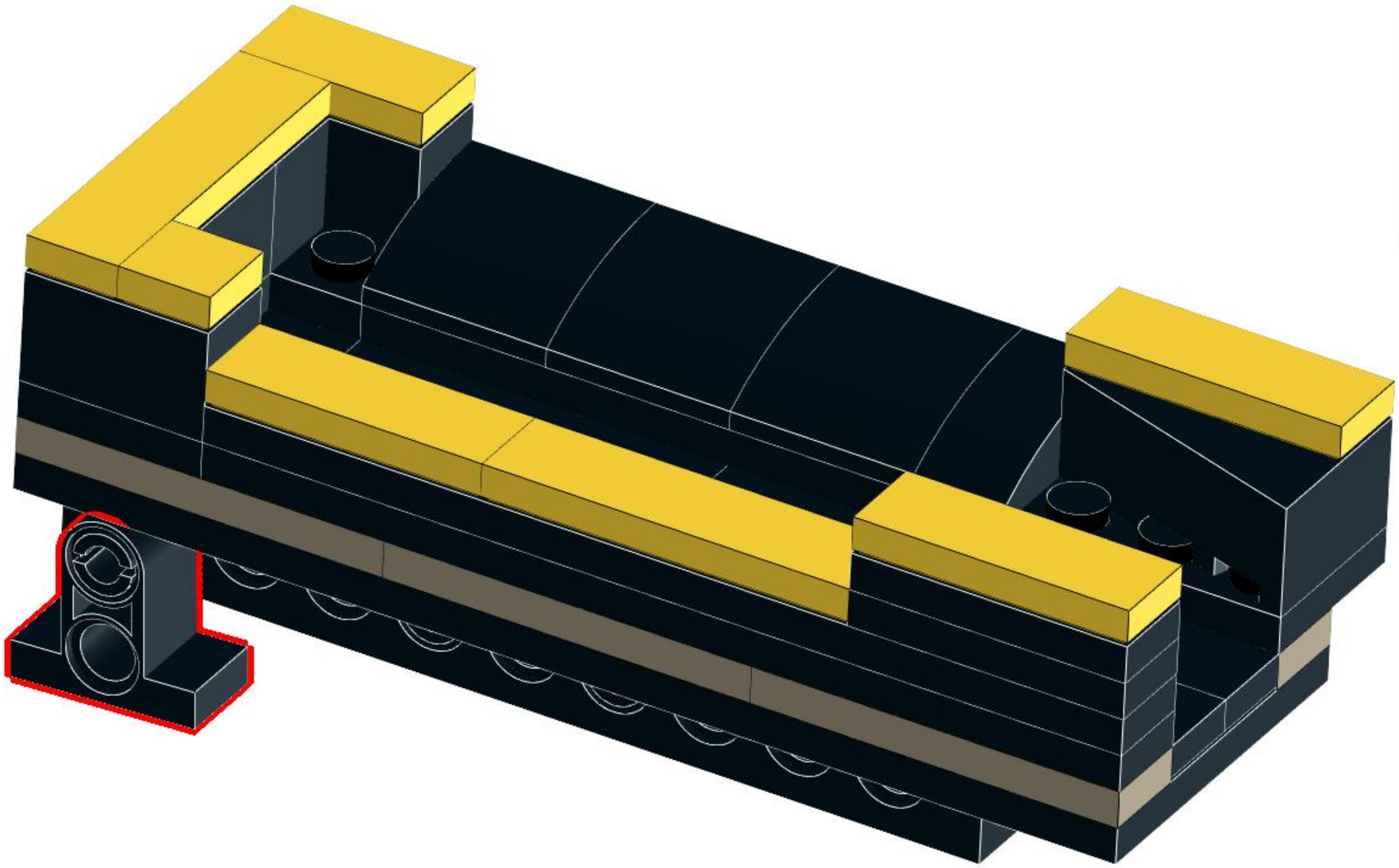

129

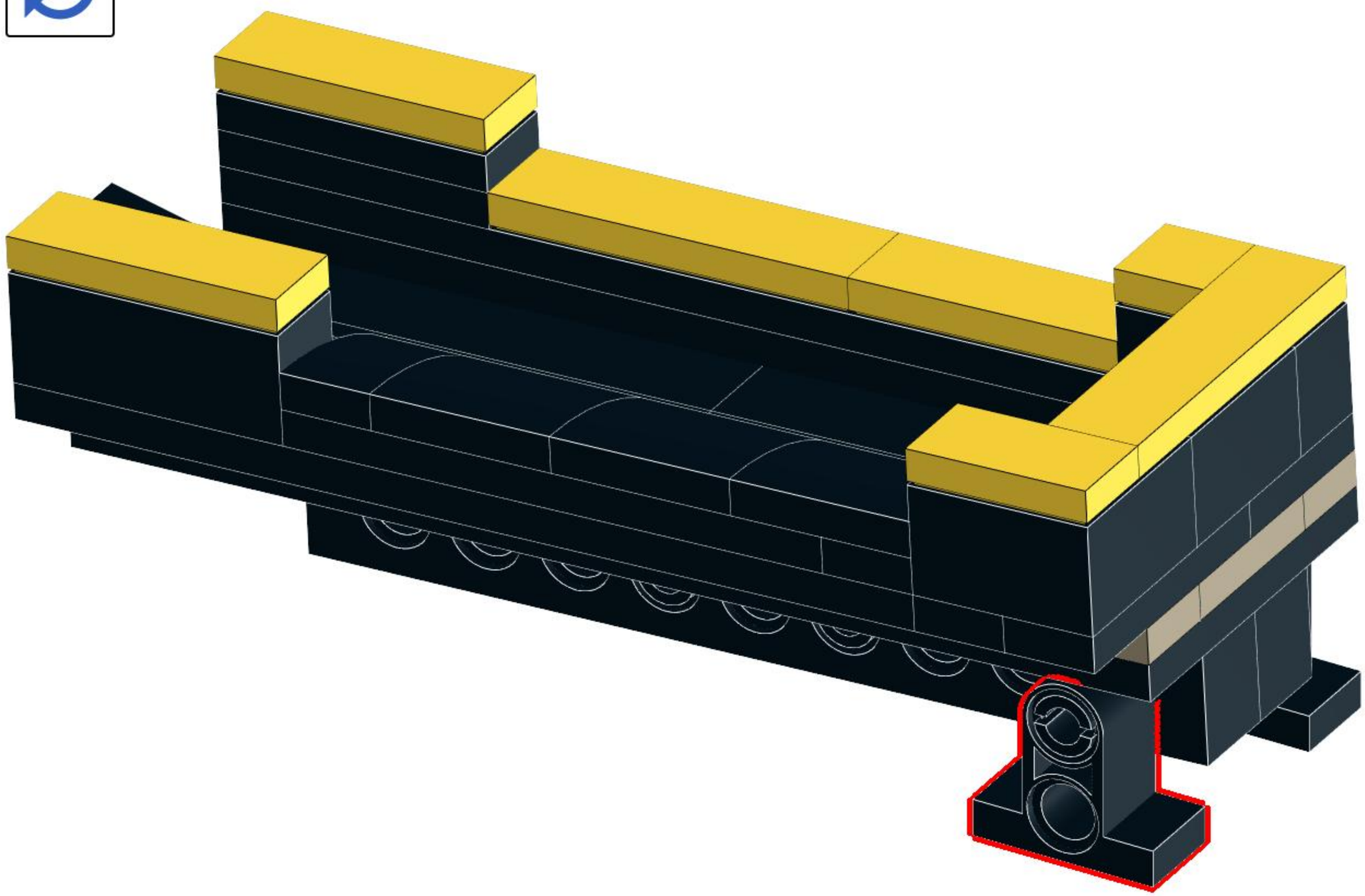

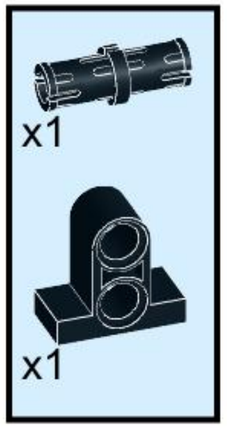

130

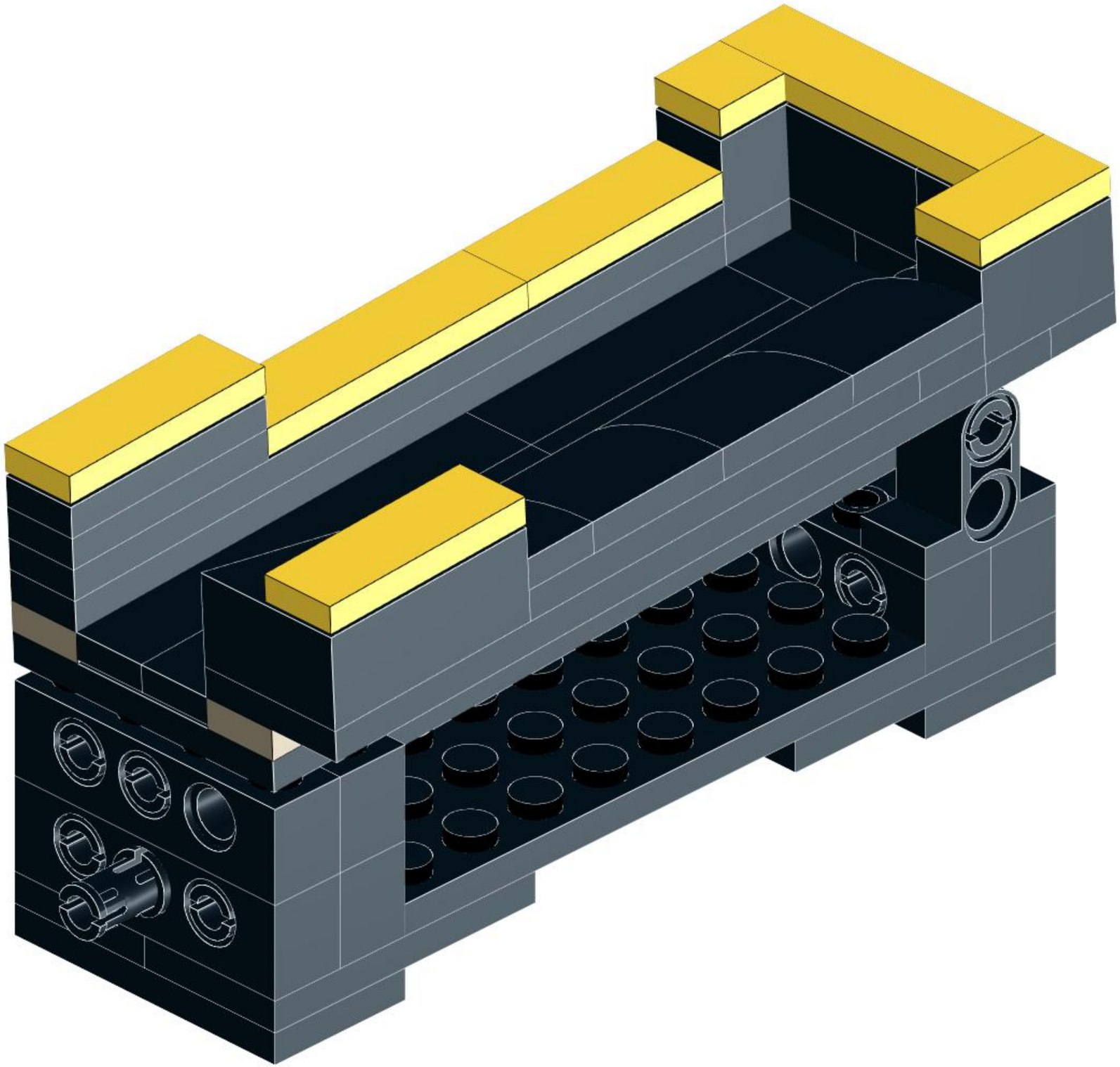

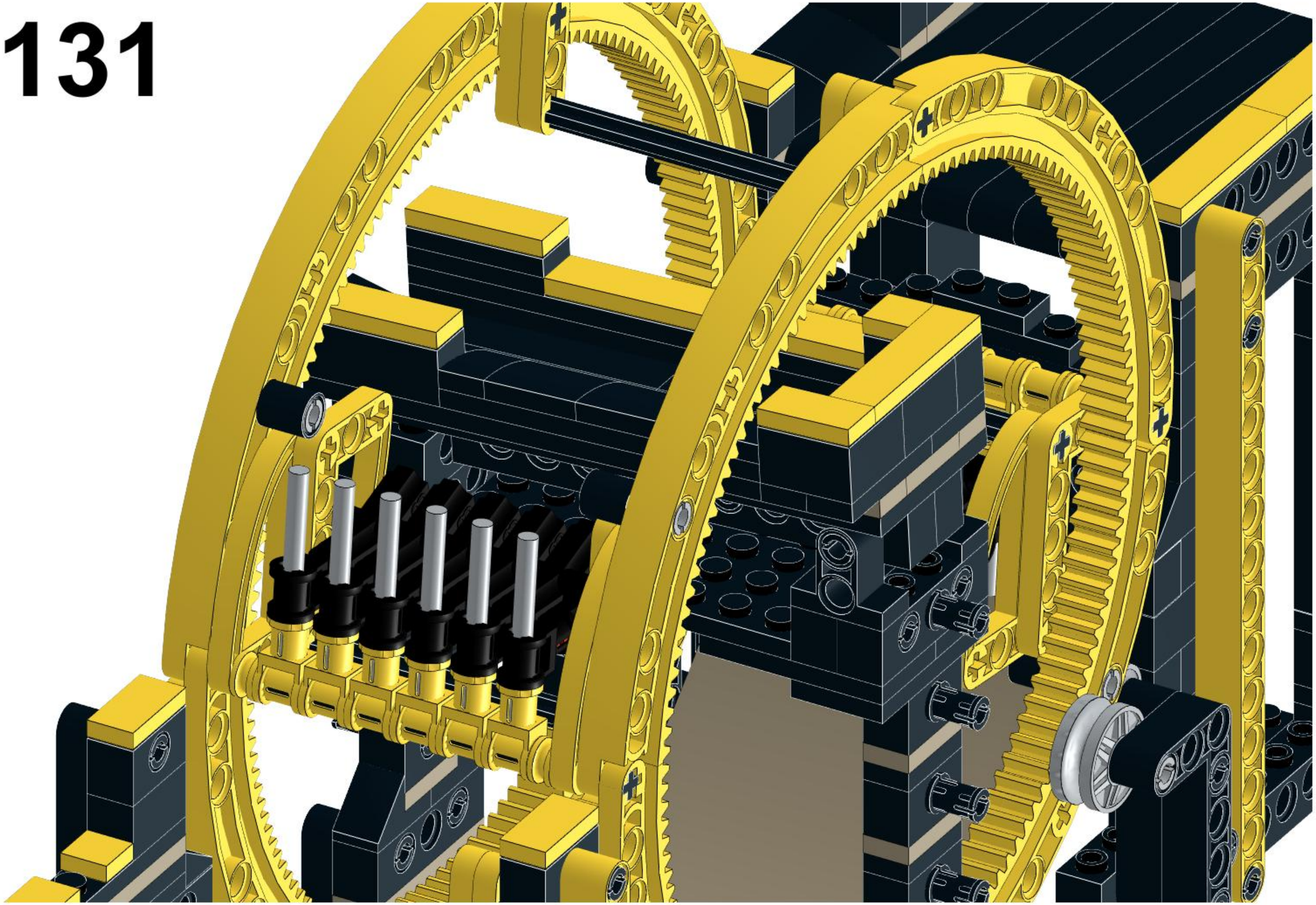

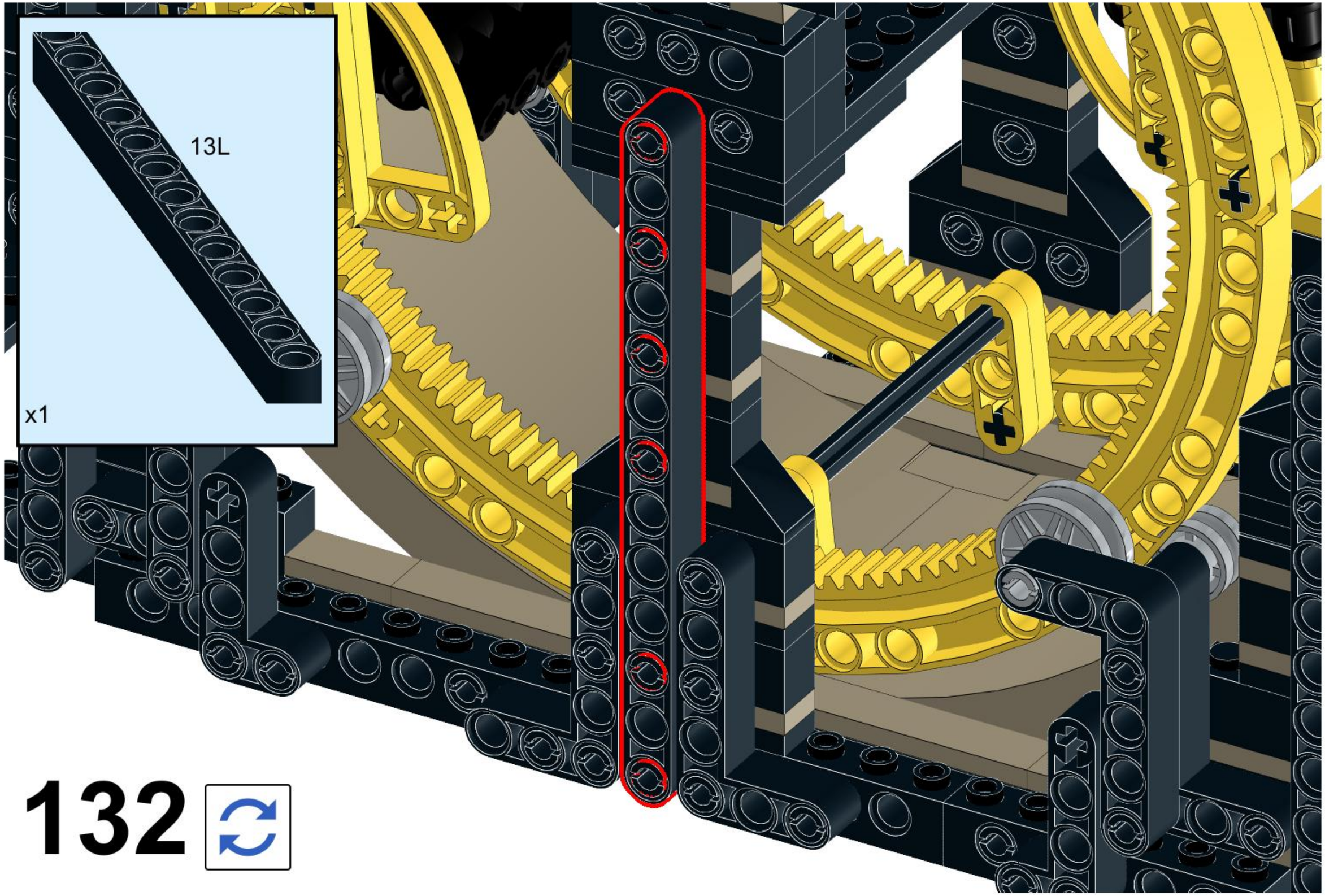

132

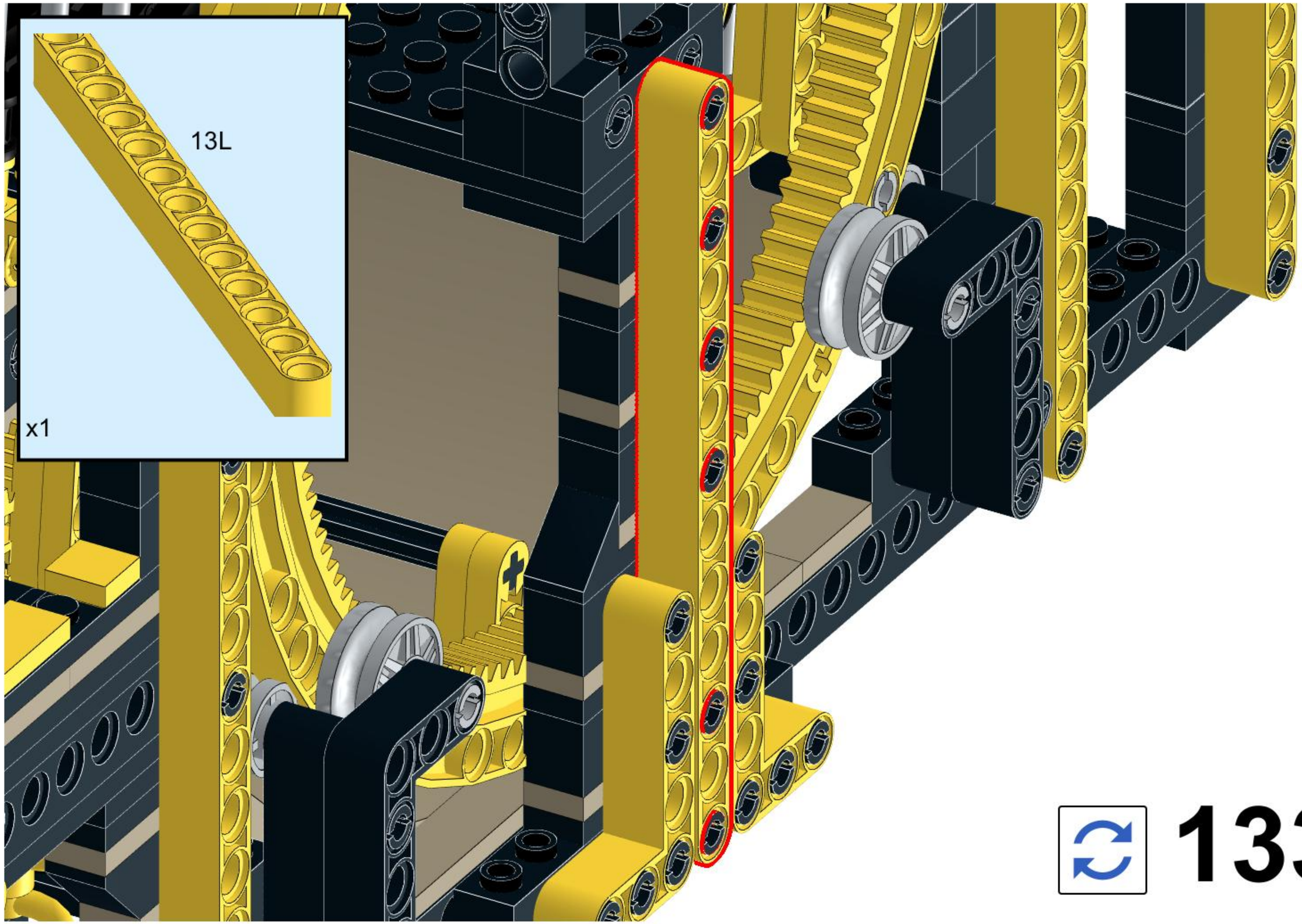

133

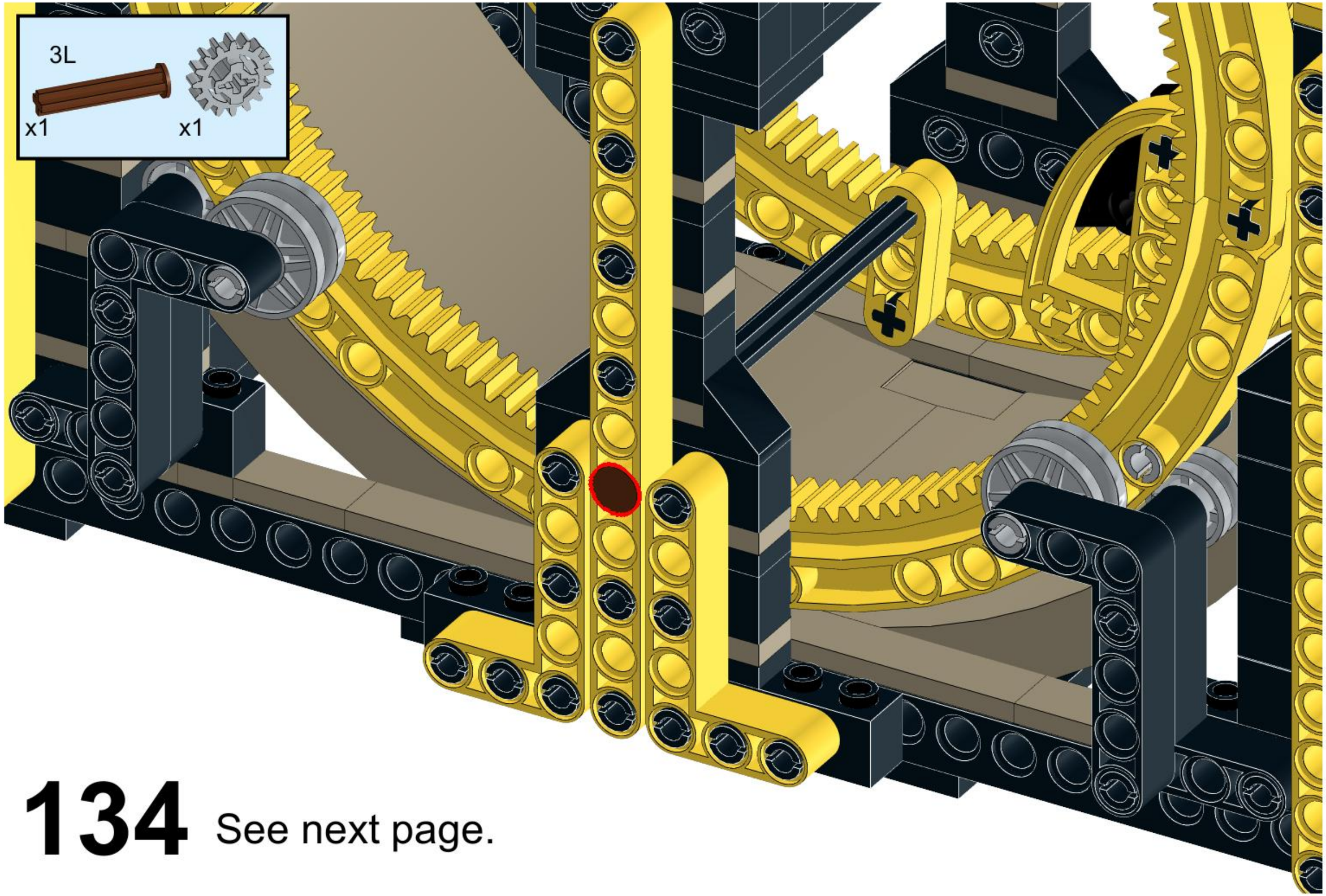

134 See next page.

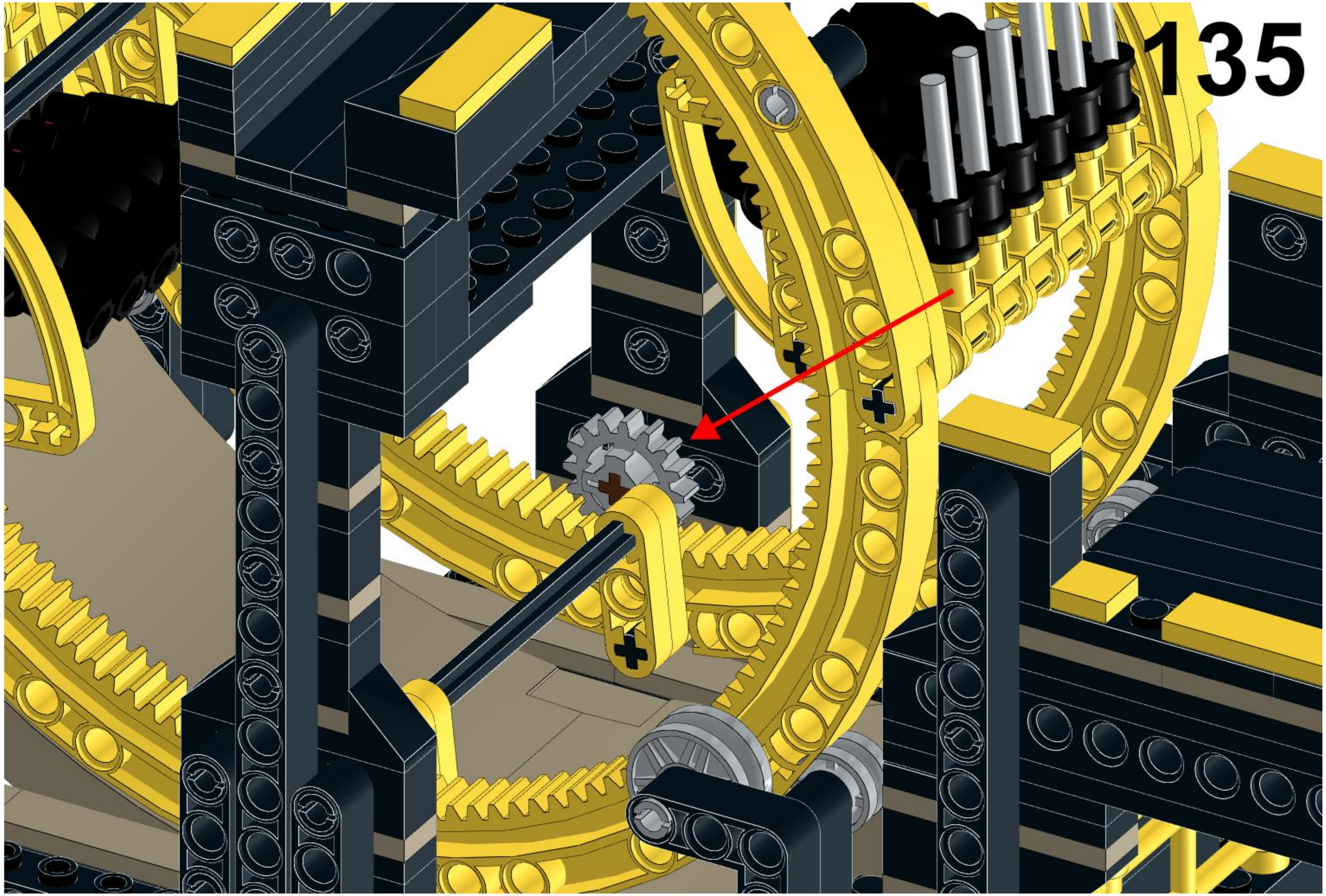

136

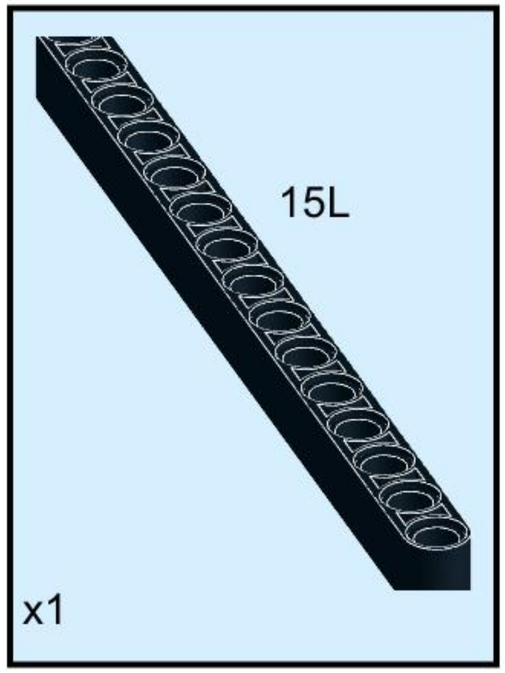

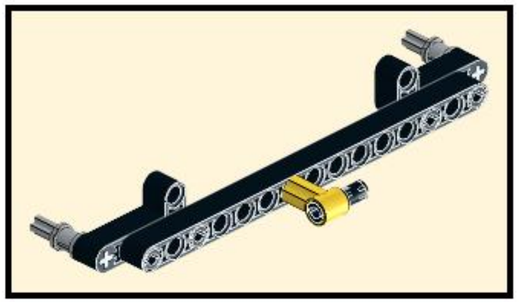

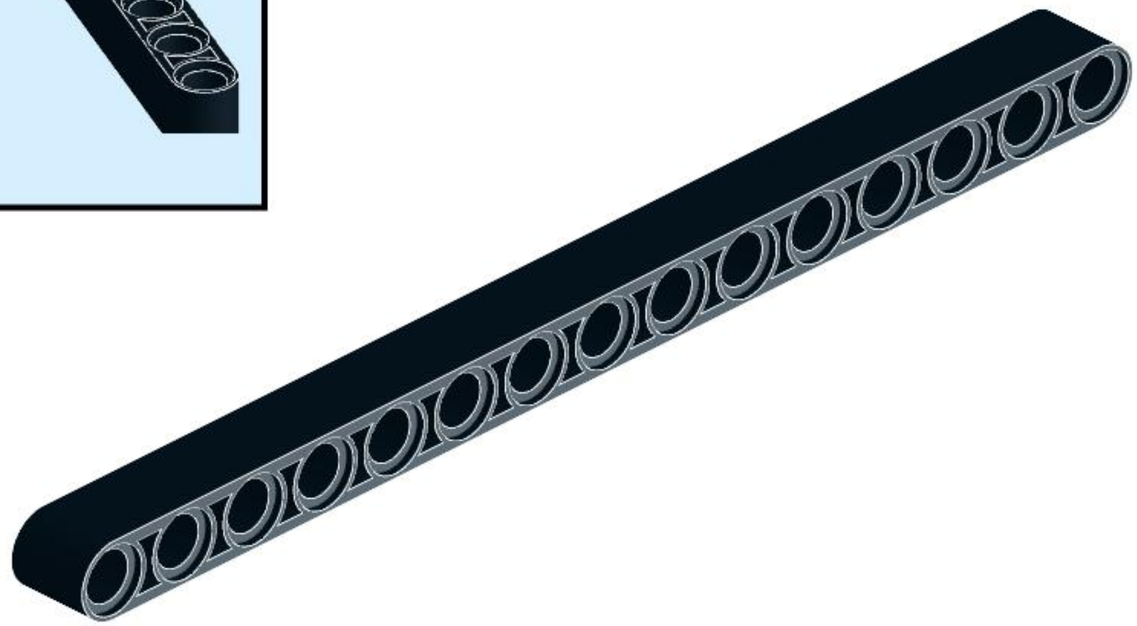

137

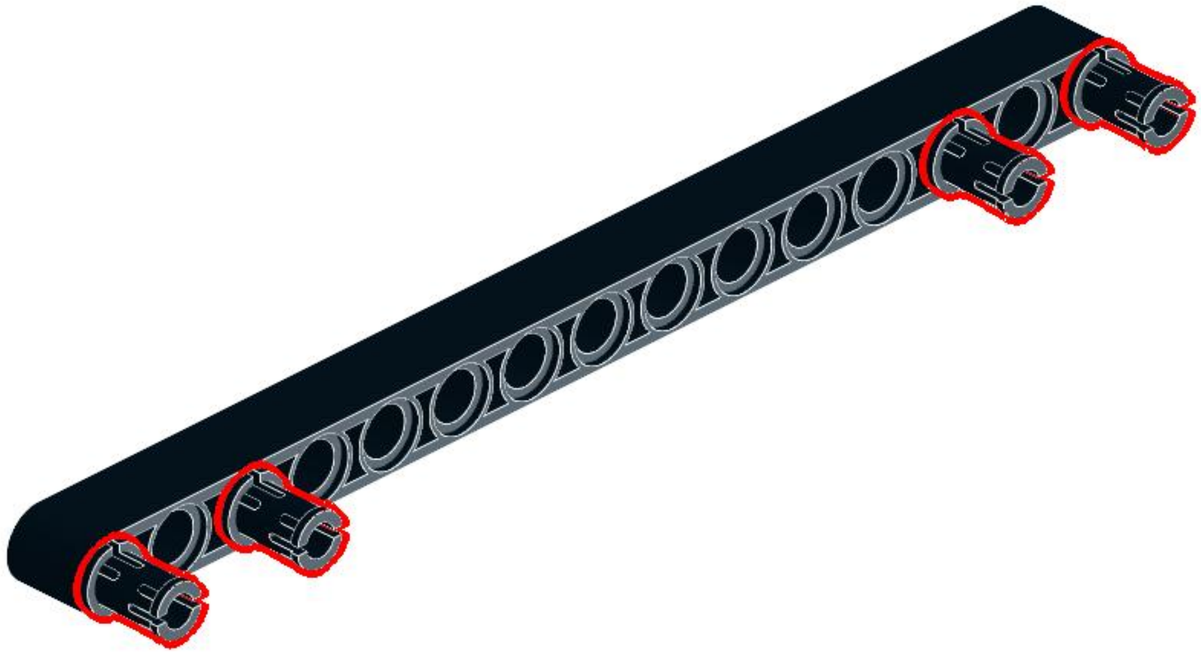

138

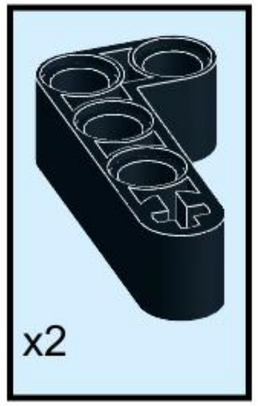

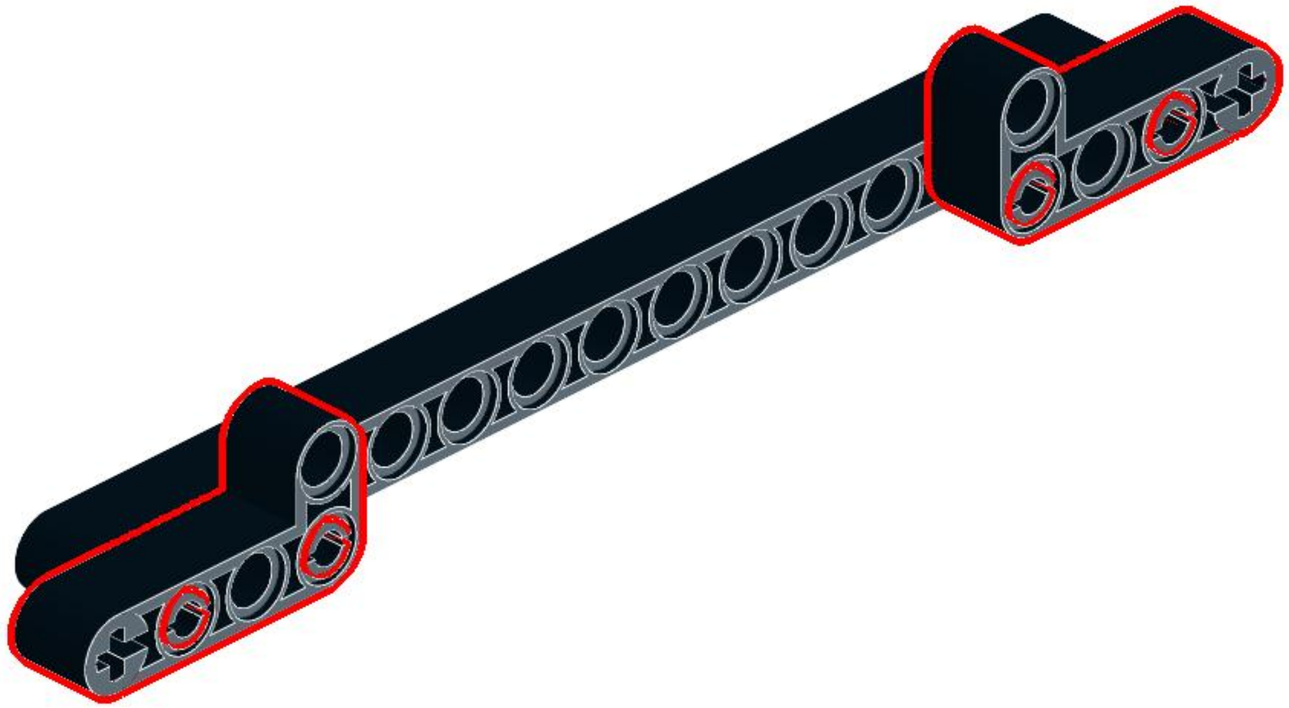

139

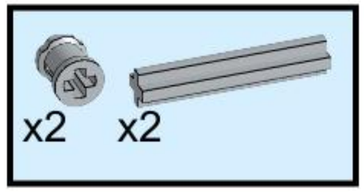

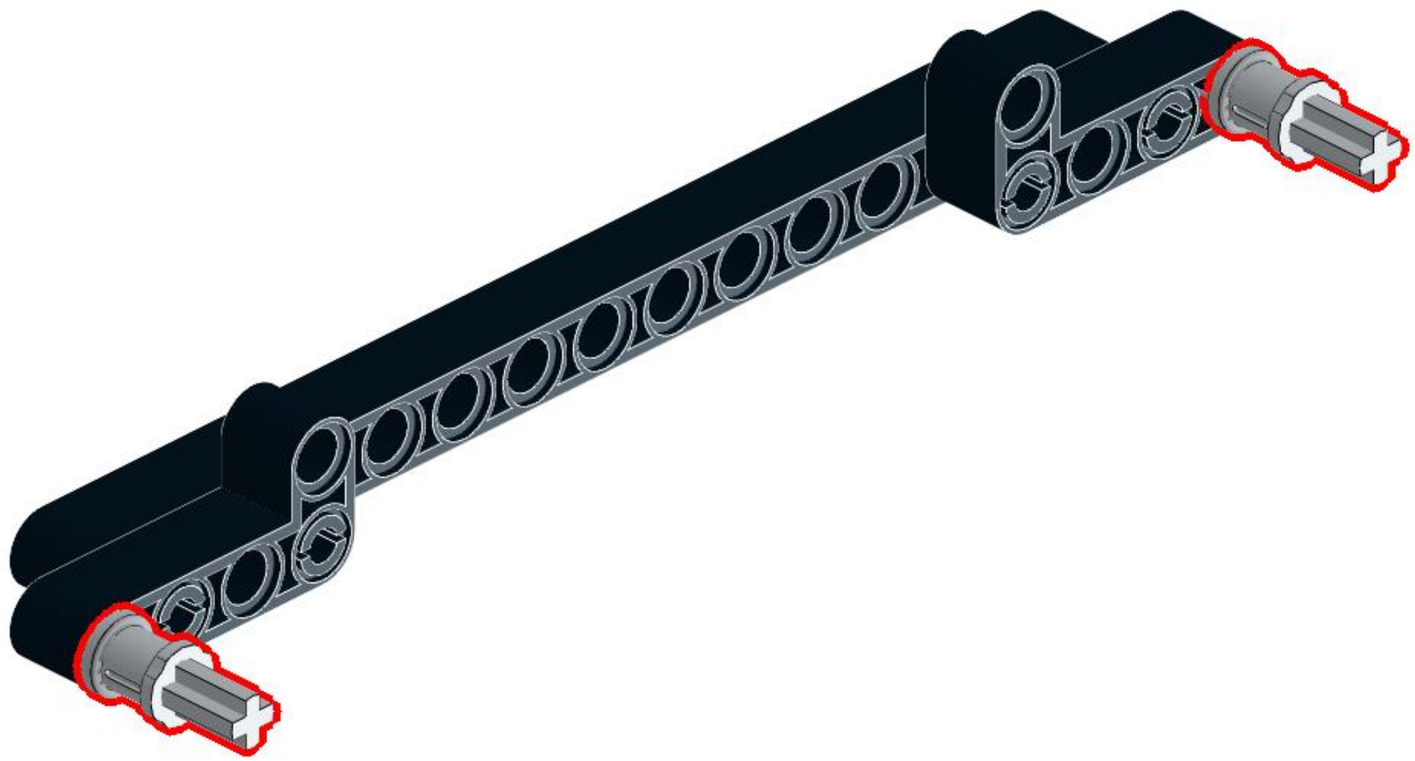

140

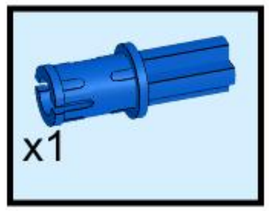

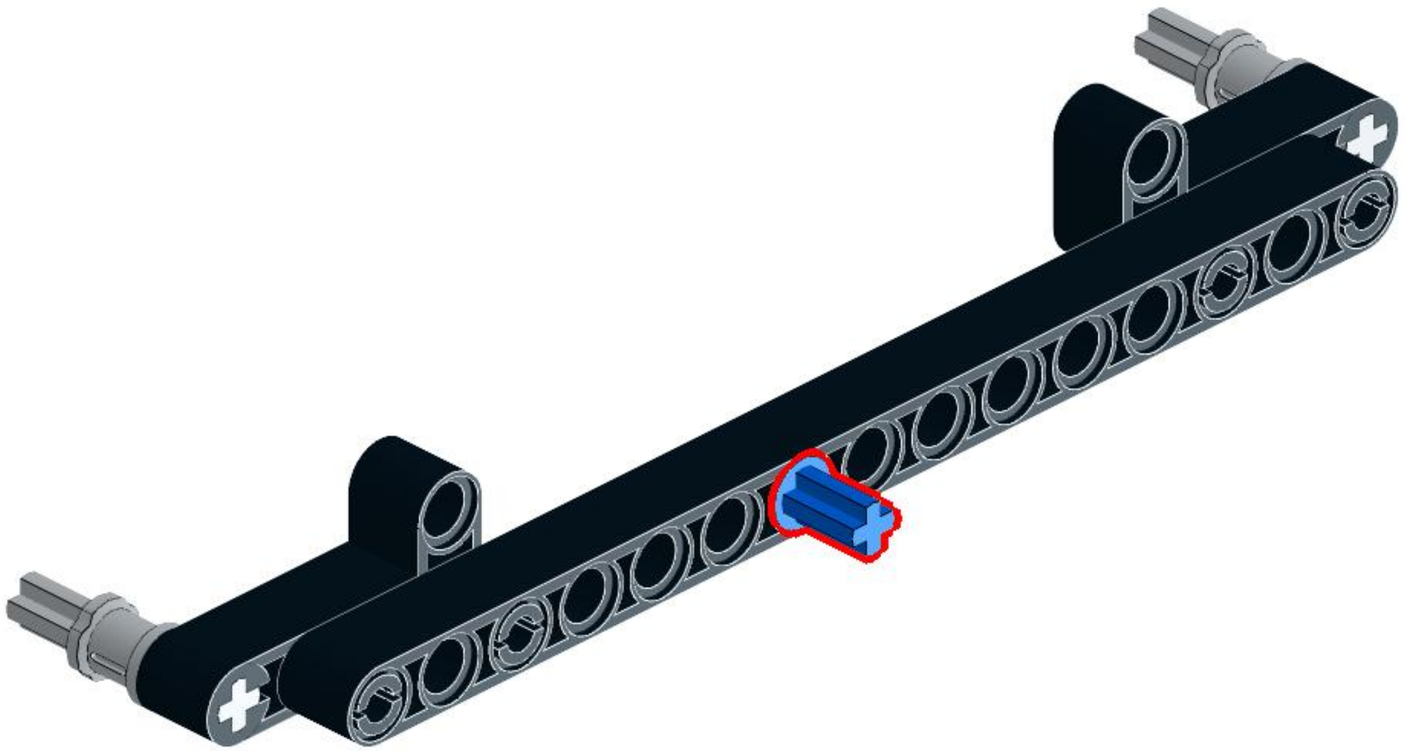

141

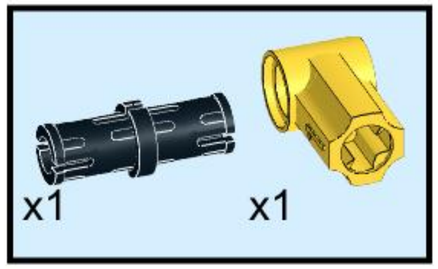

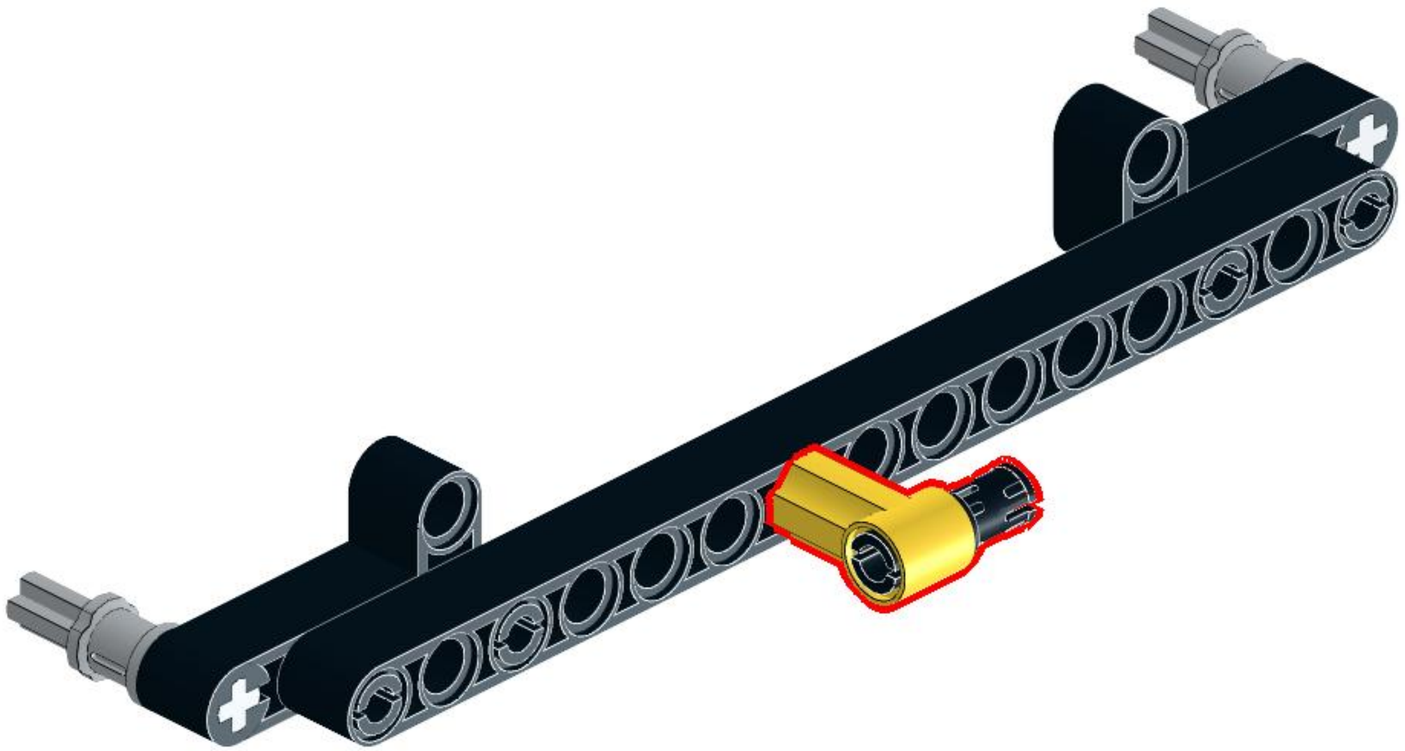

142

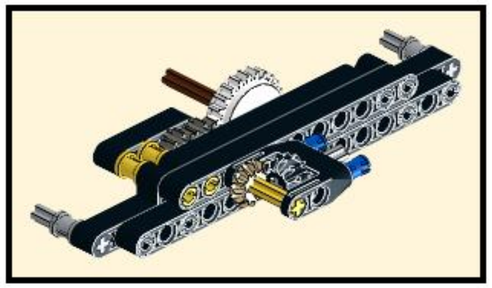

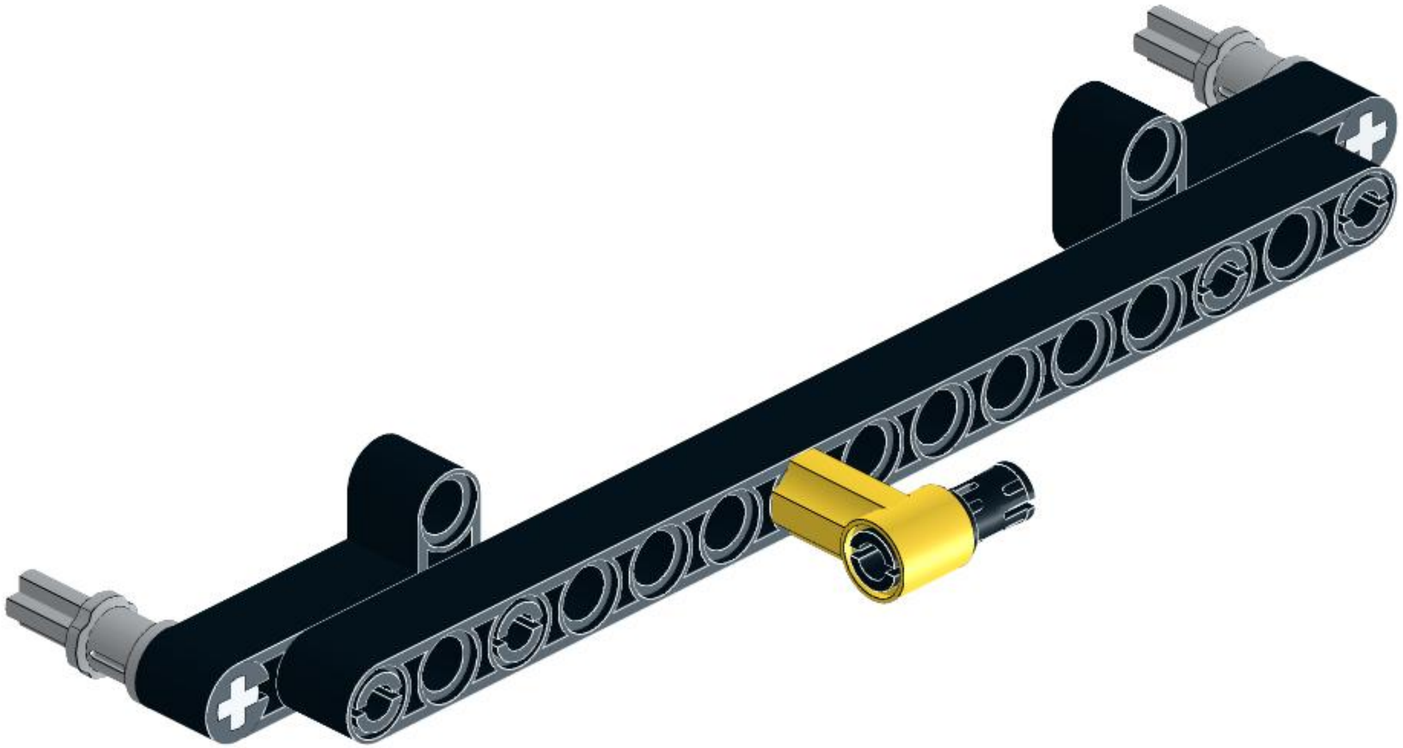

143

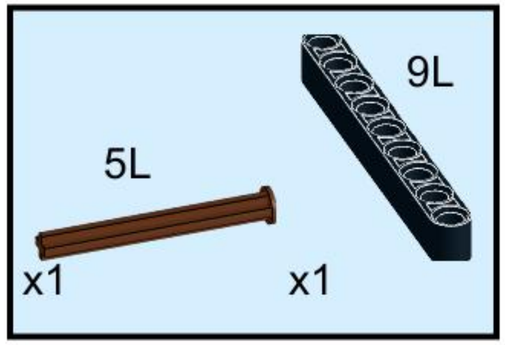

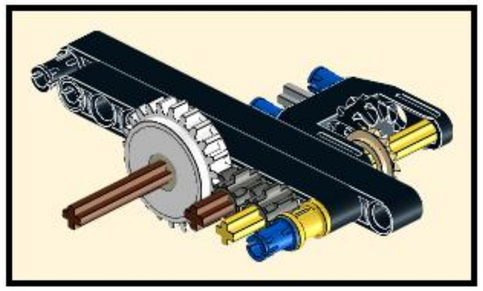

144

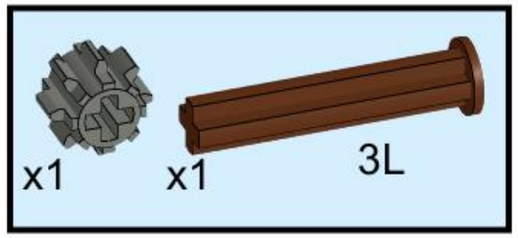

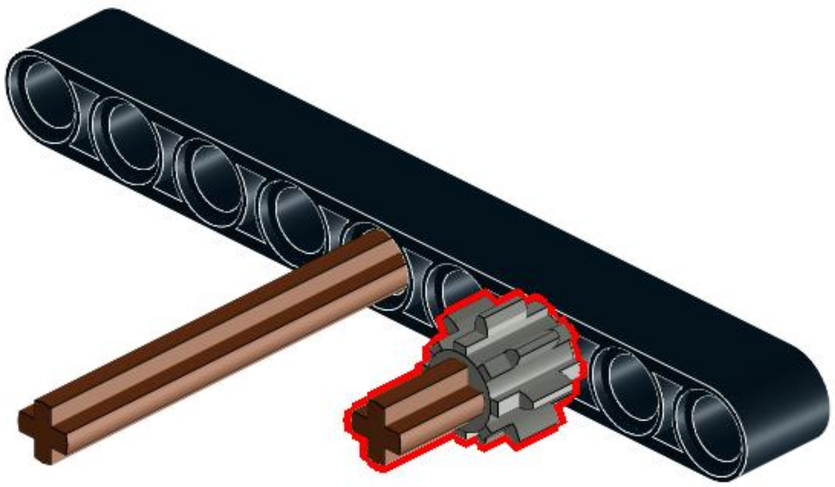

145

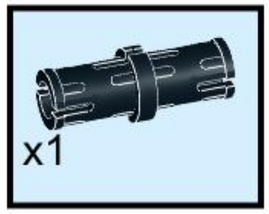

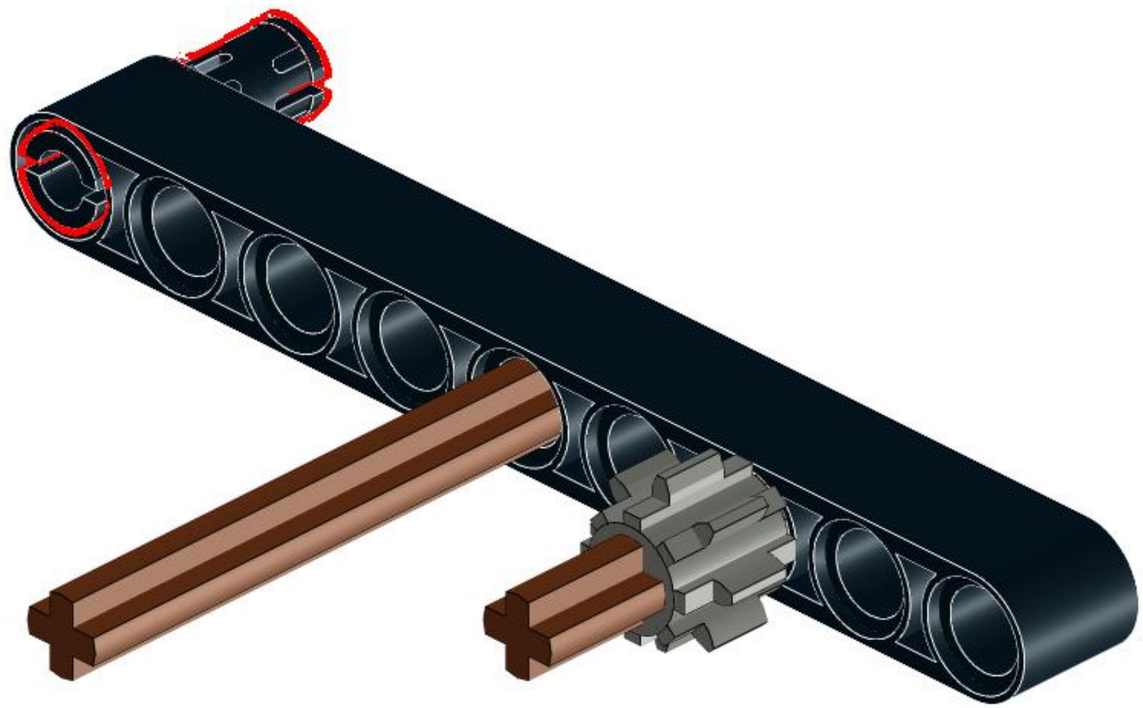

146

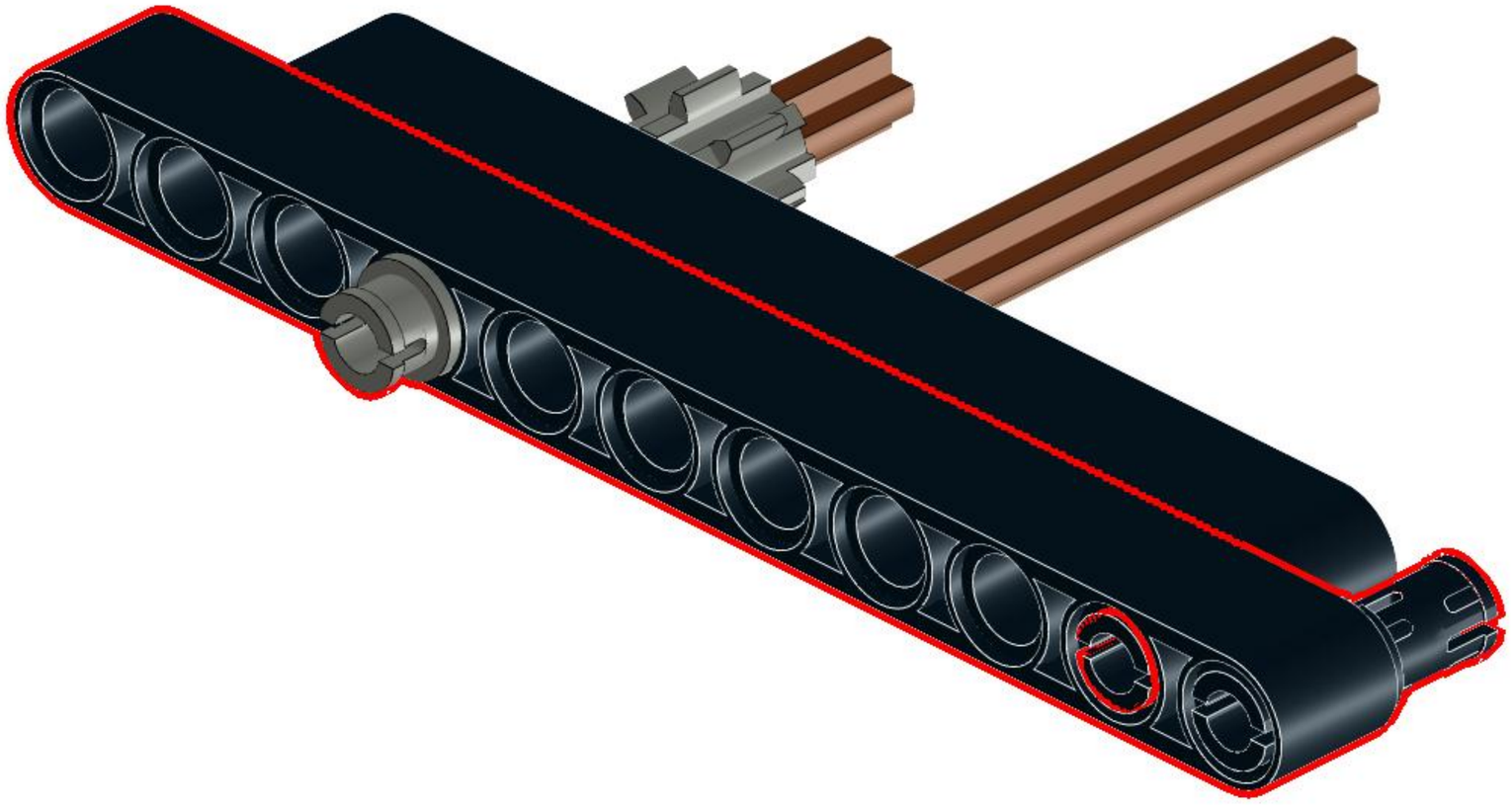

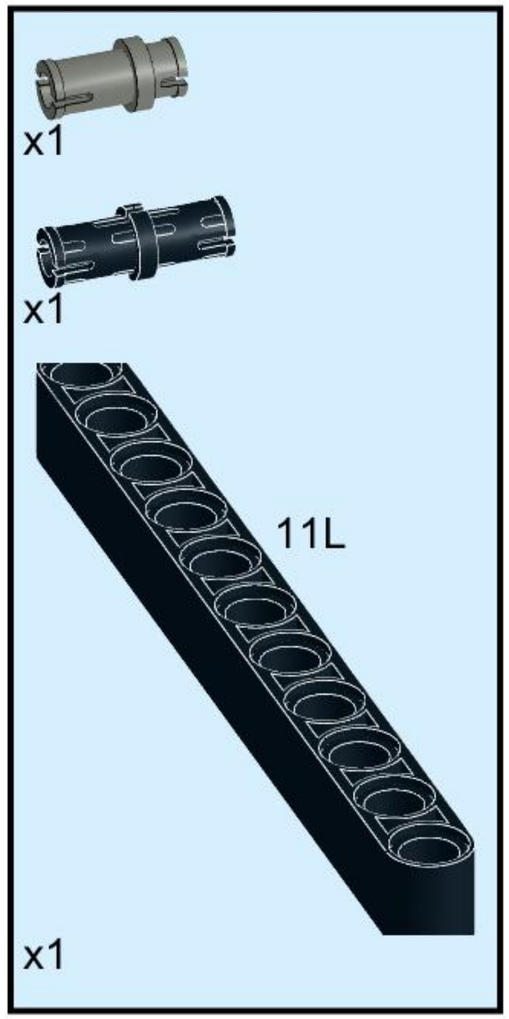

147

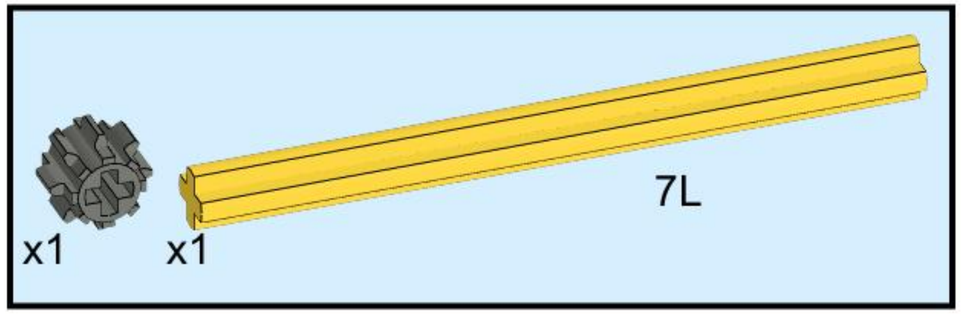

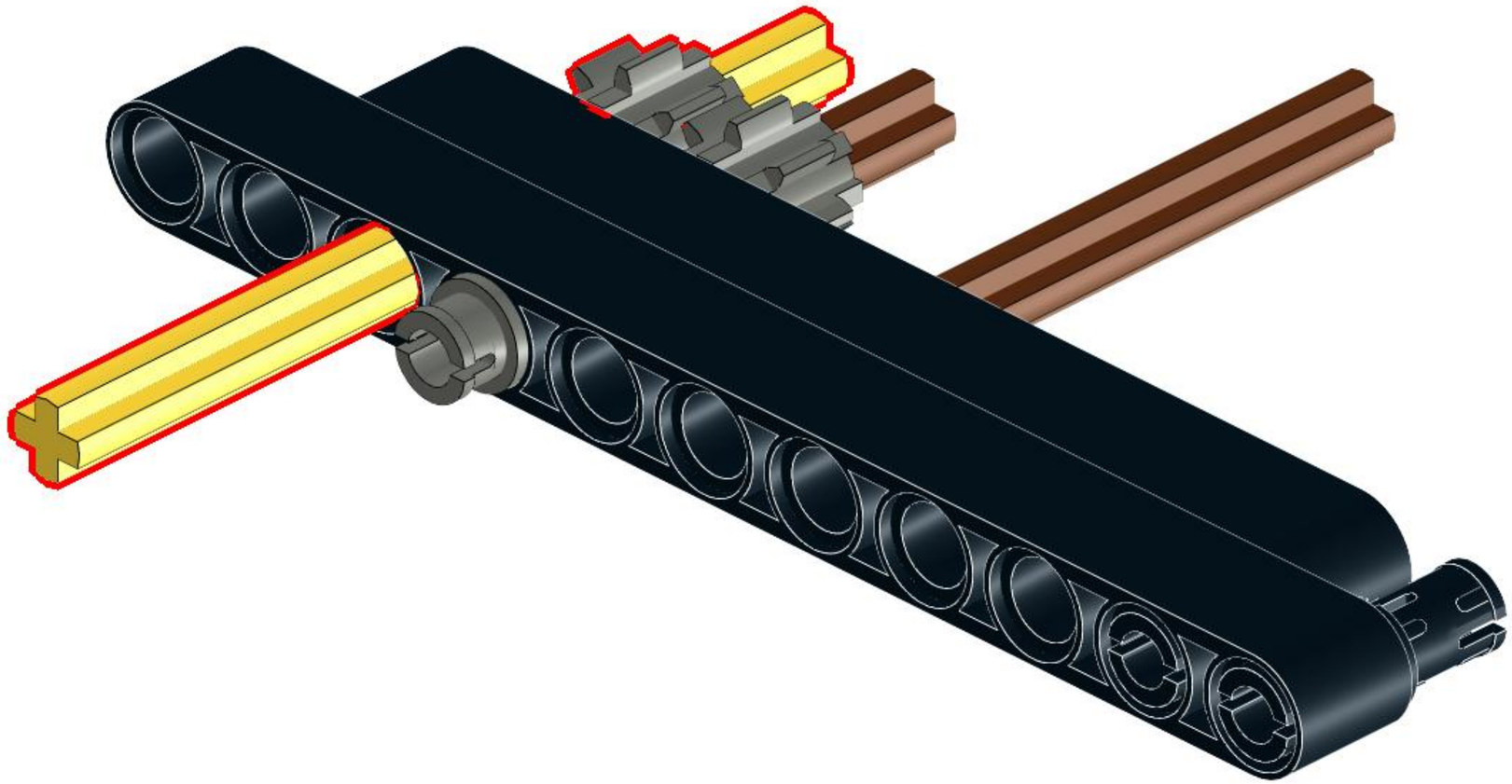

148

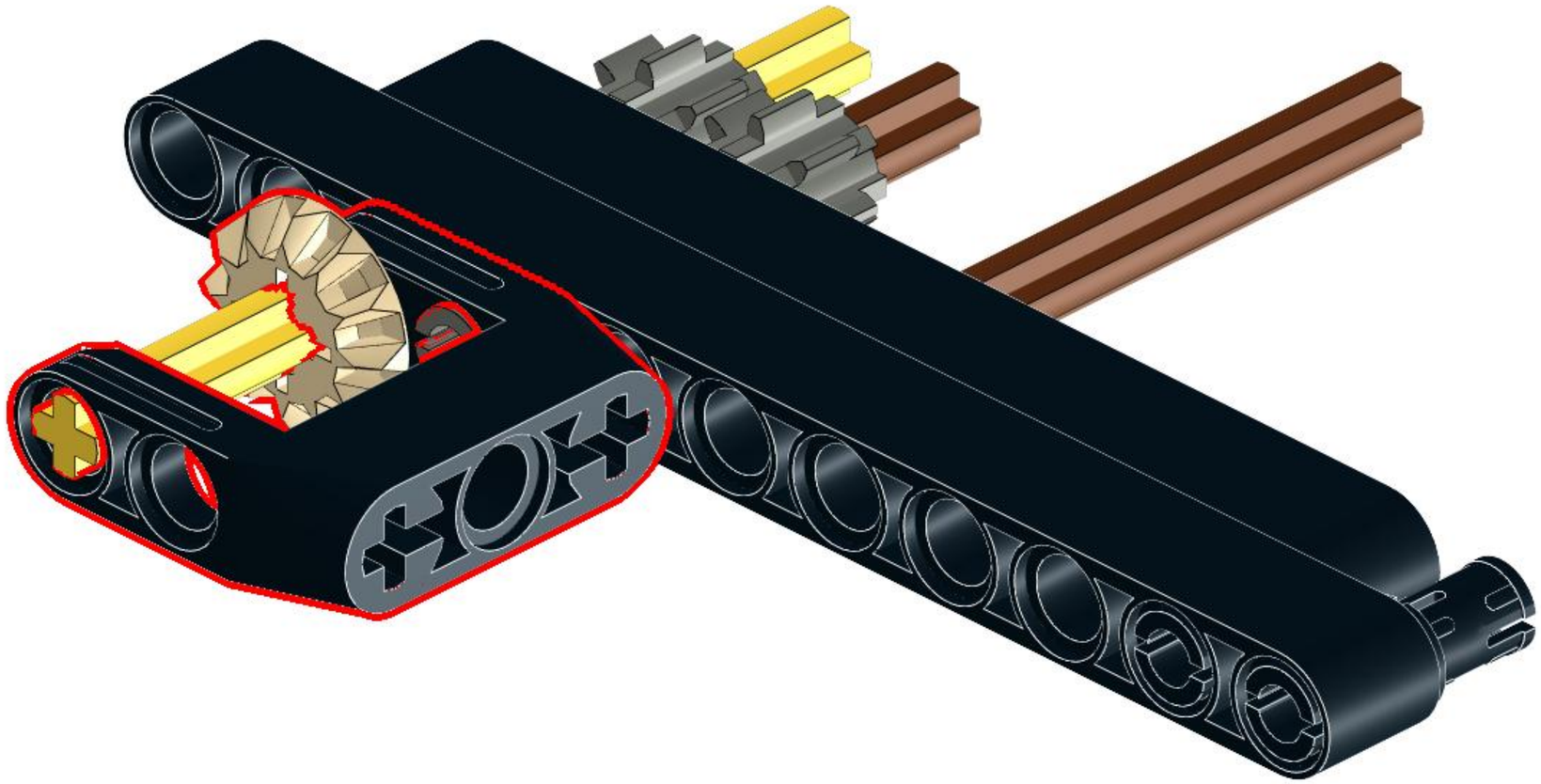

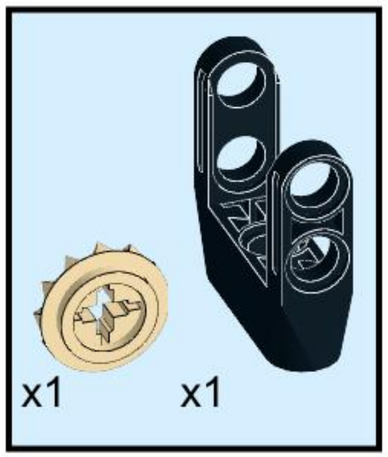

149

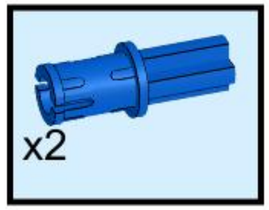

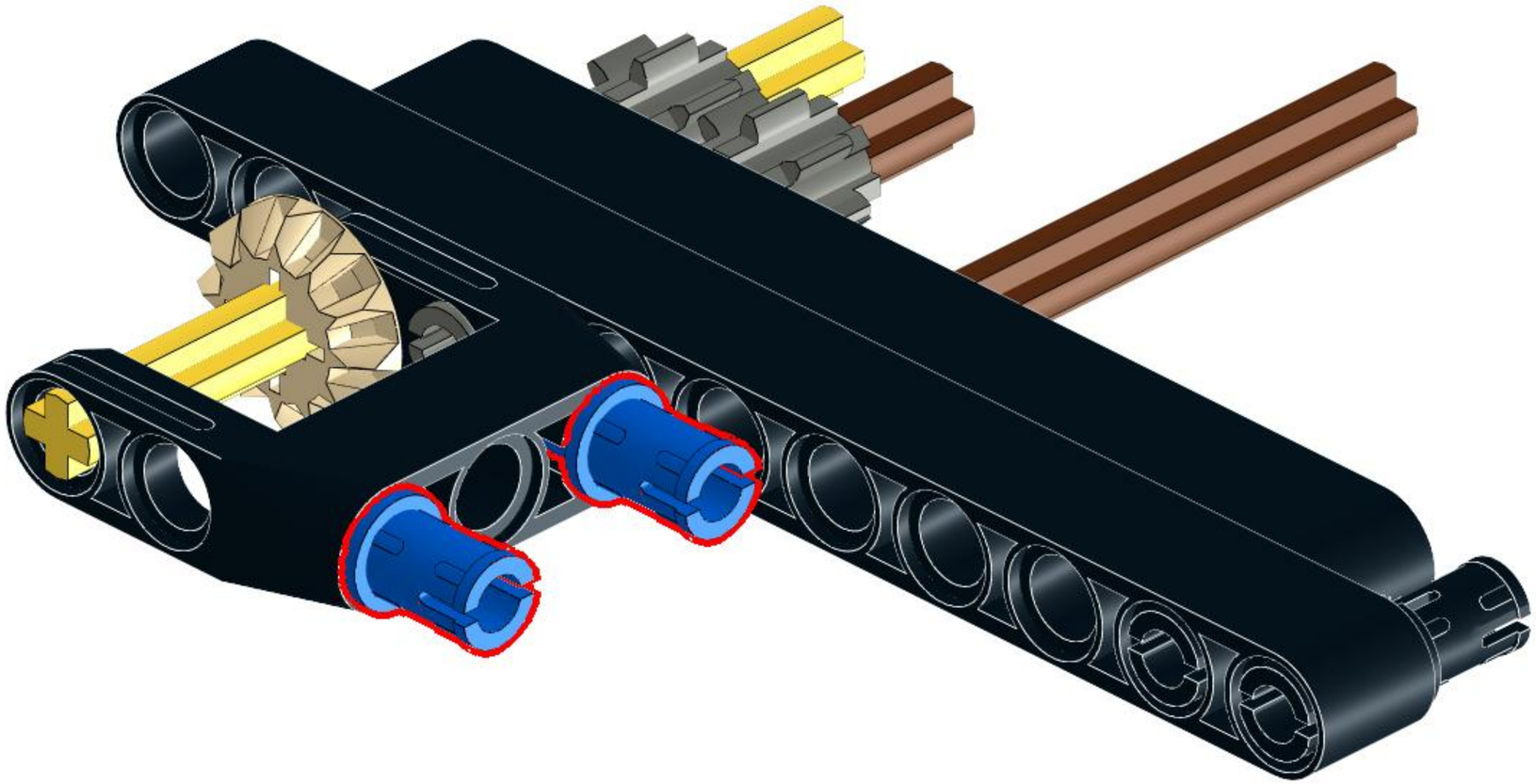

150

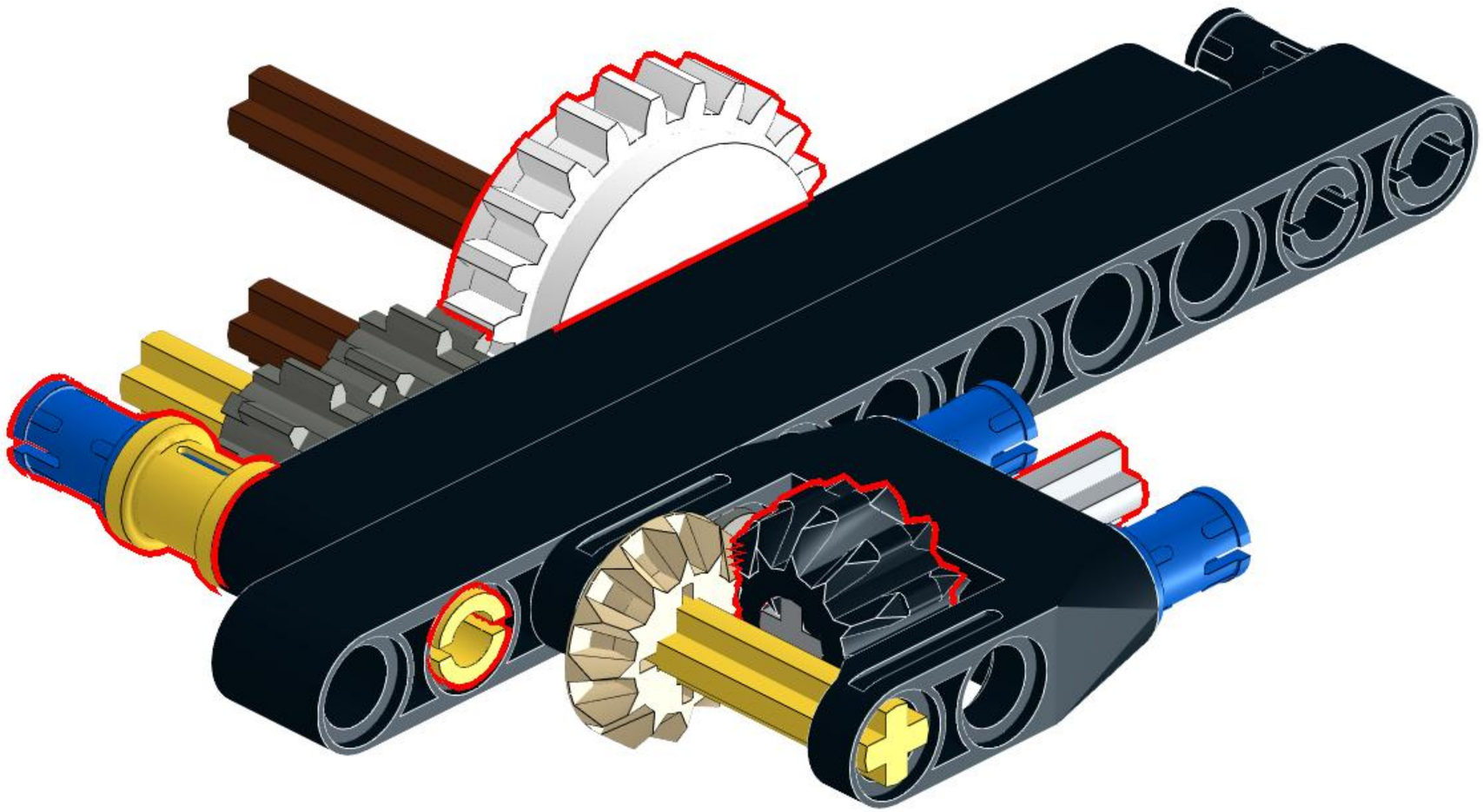

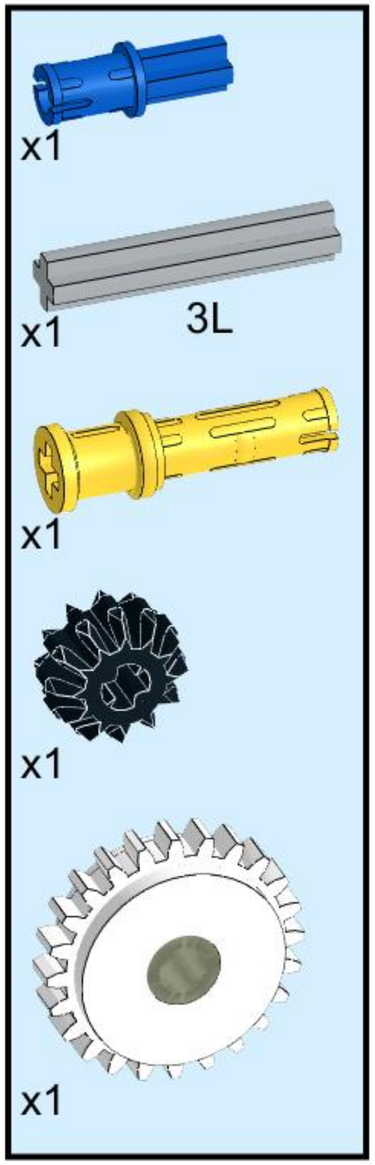

151

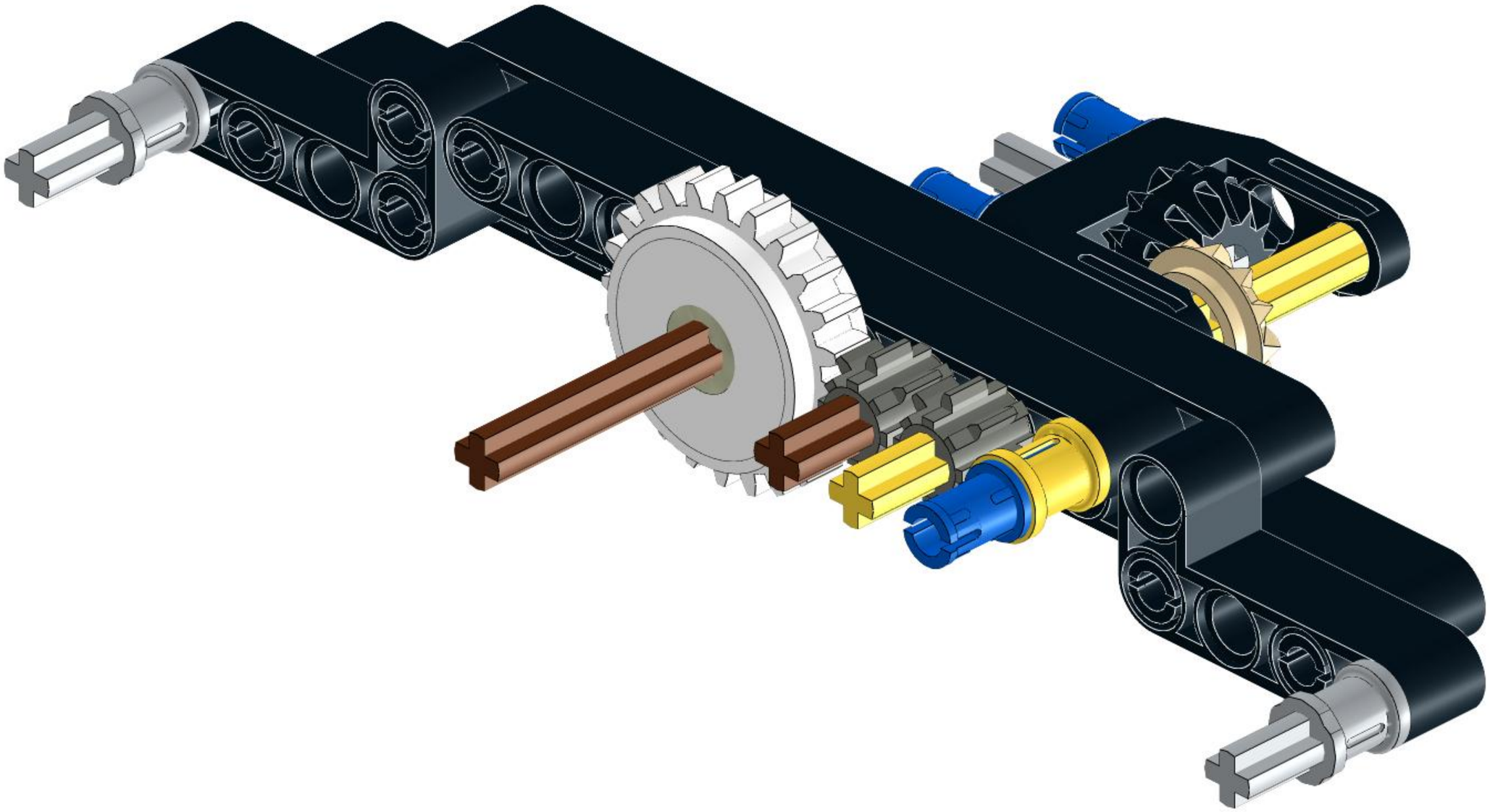

152

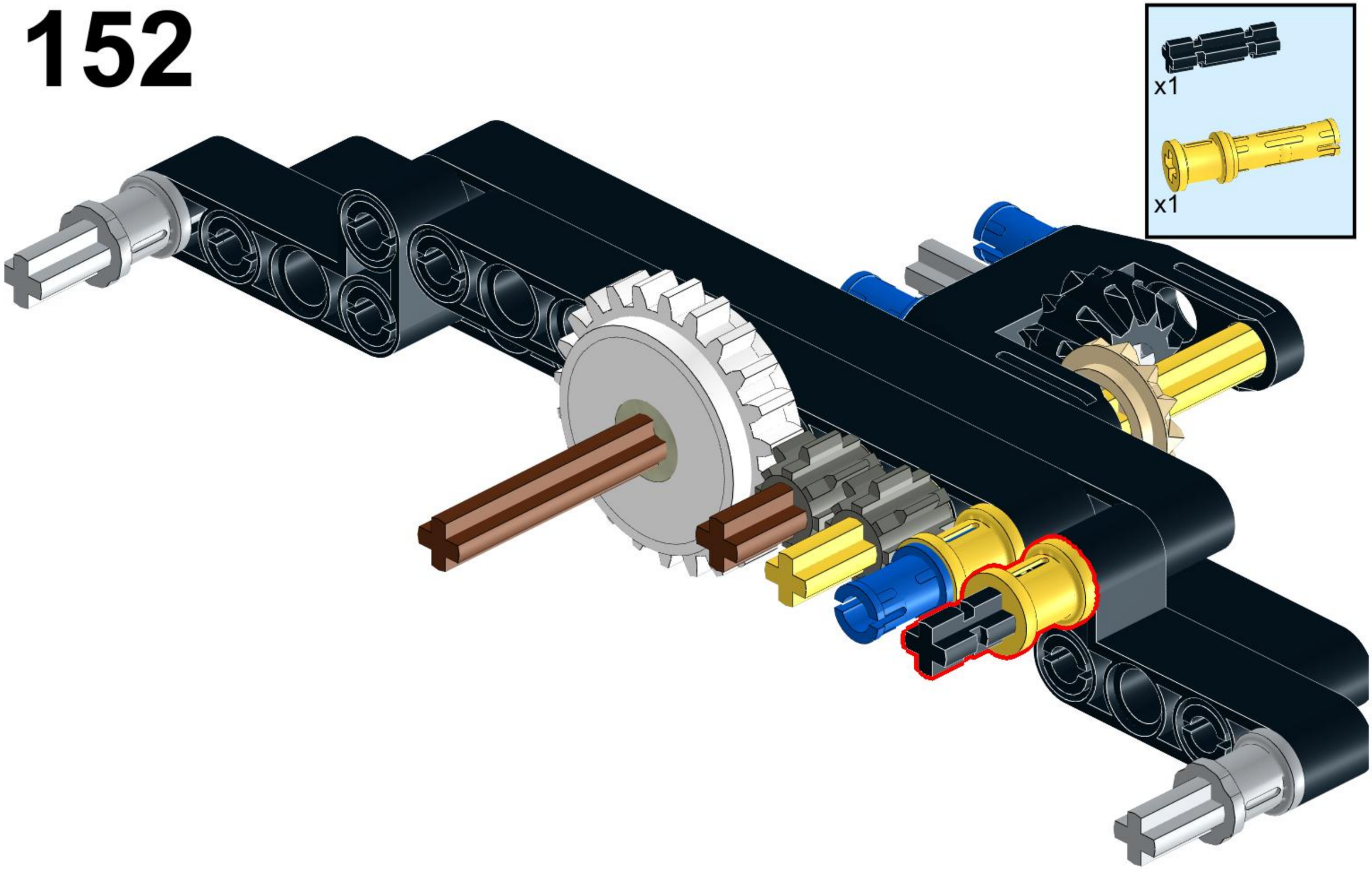

153

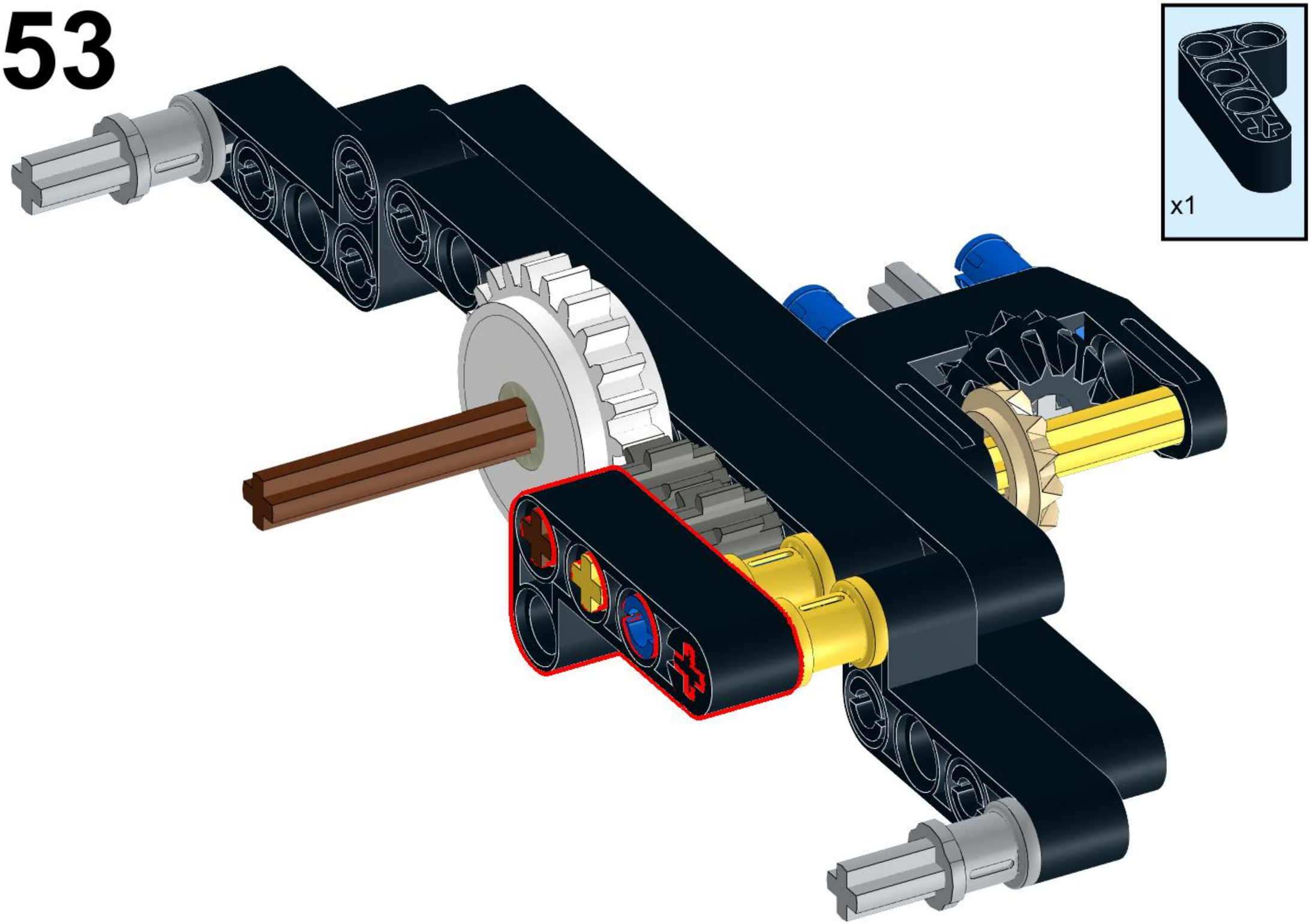

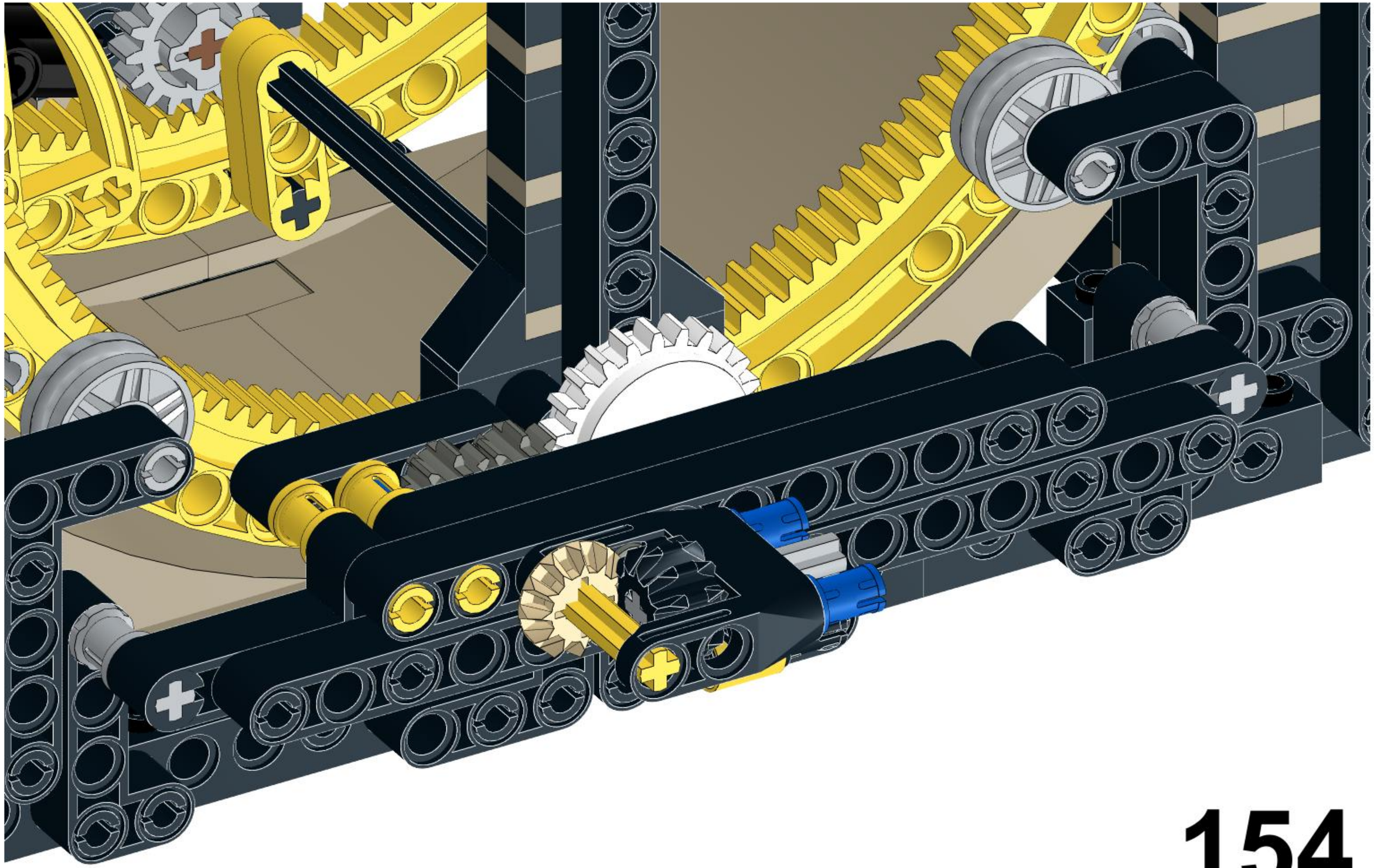

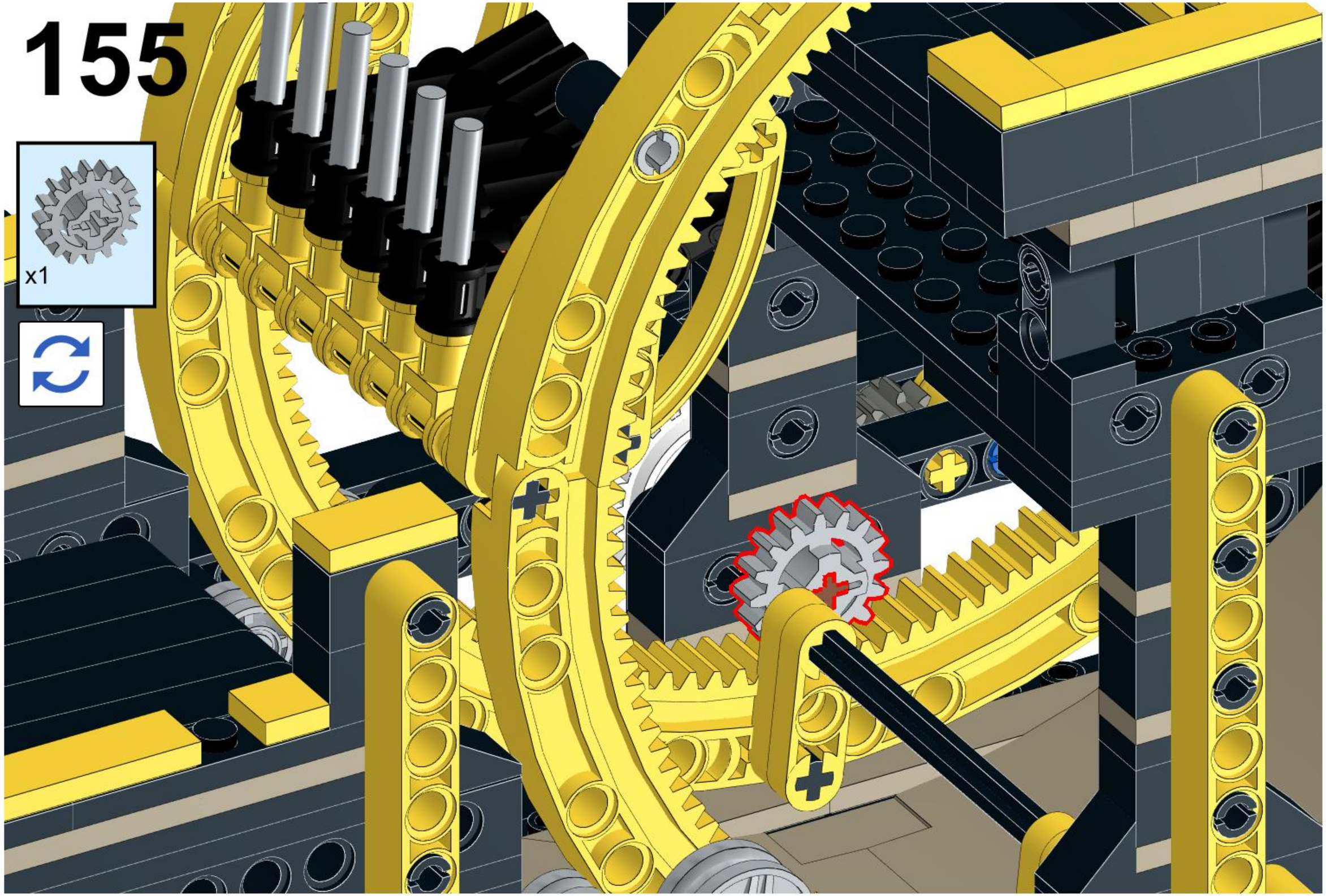
155
x1

156

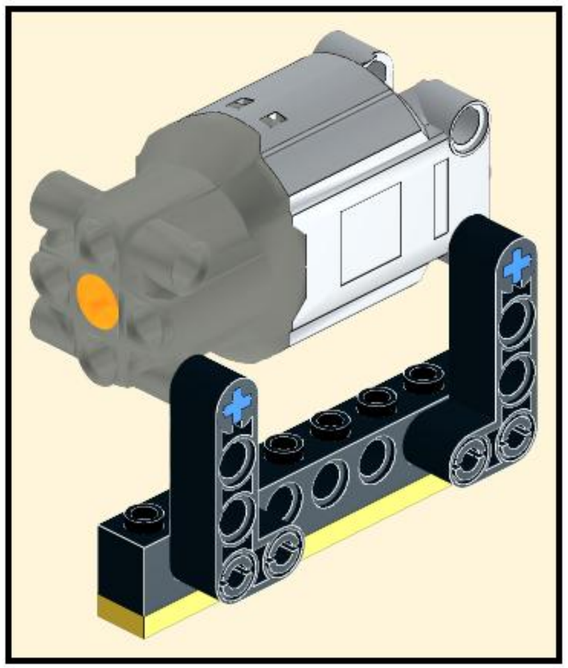

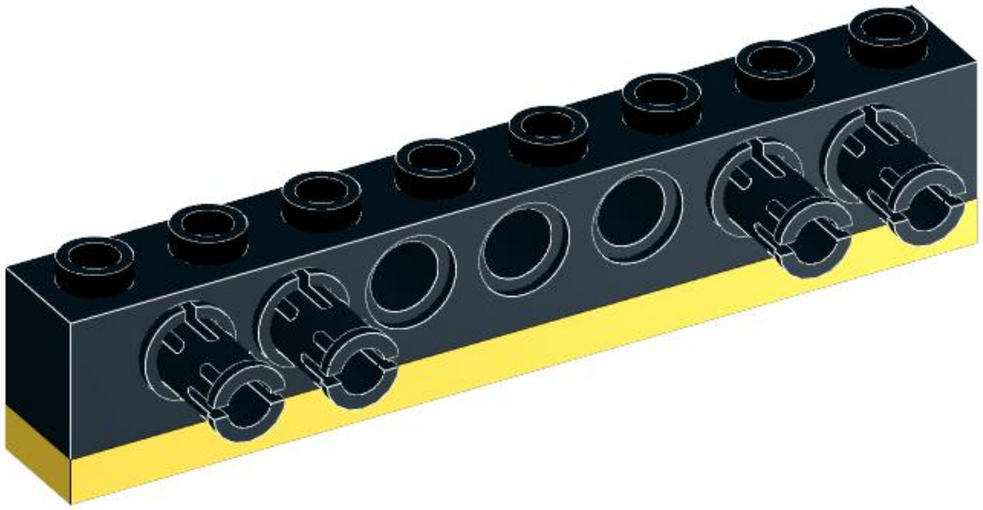

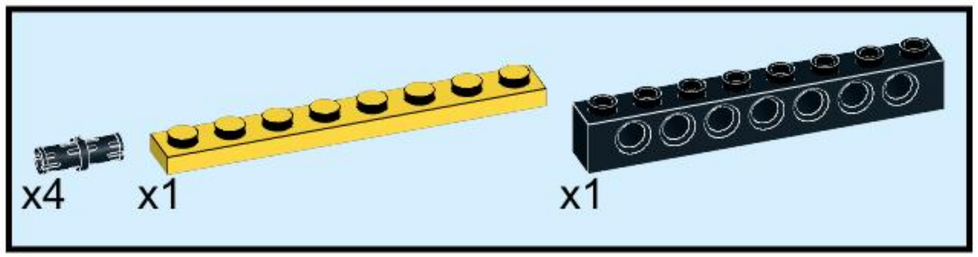

157

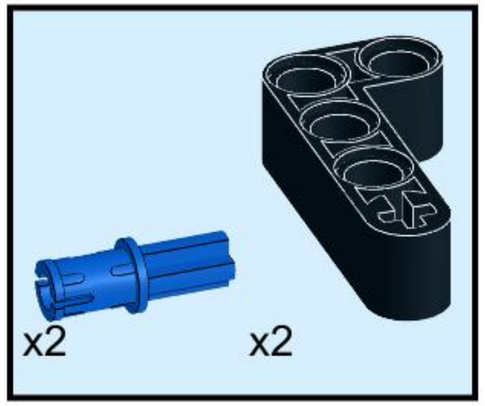

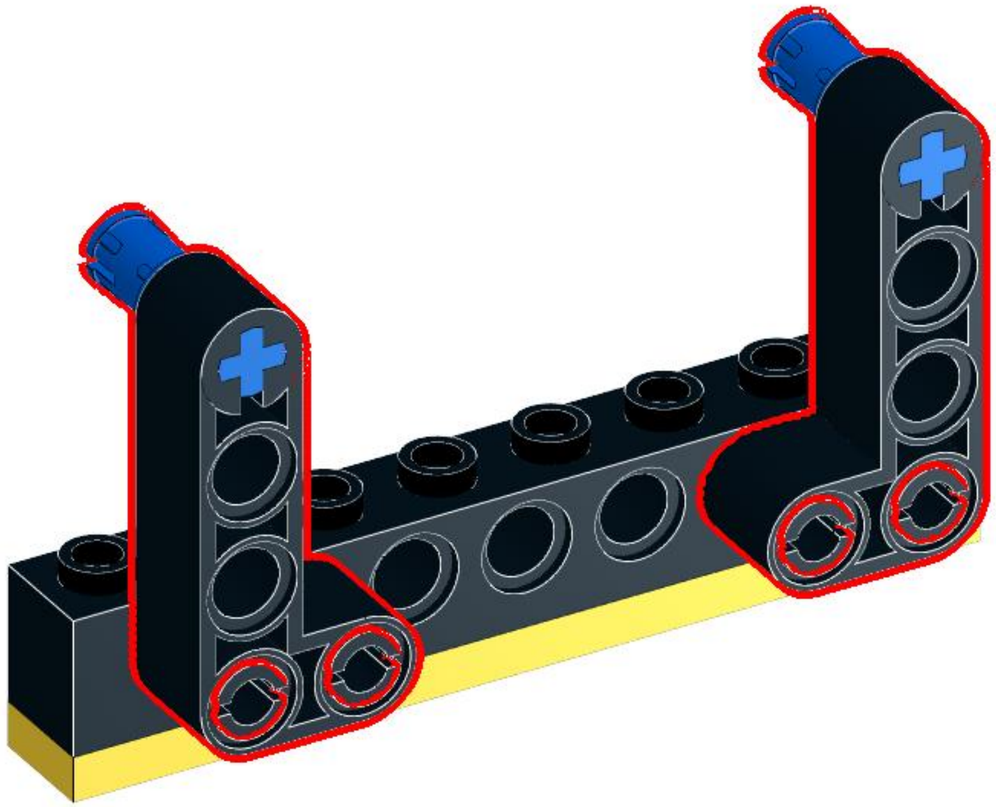

158

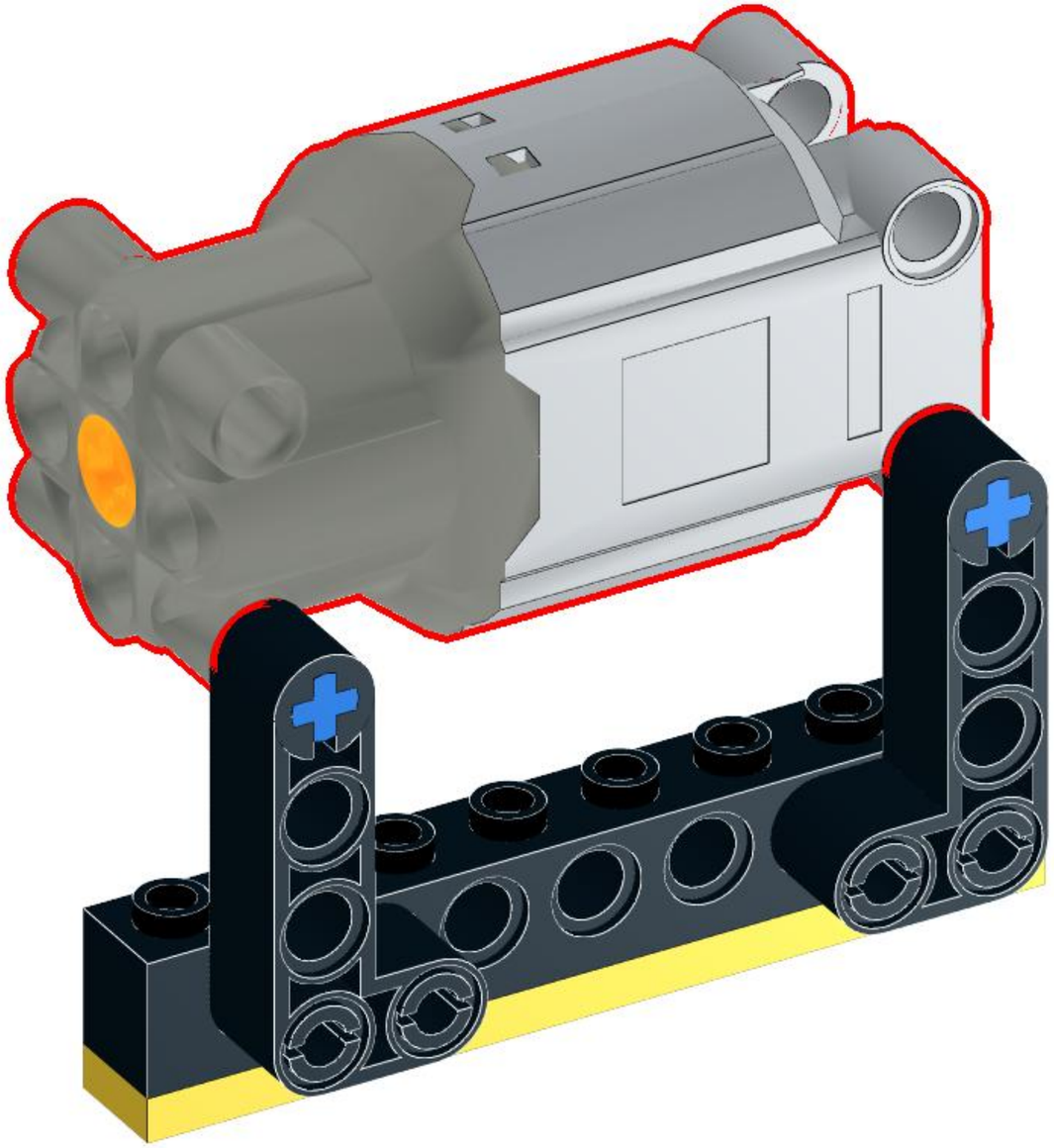

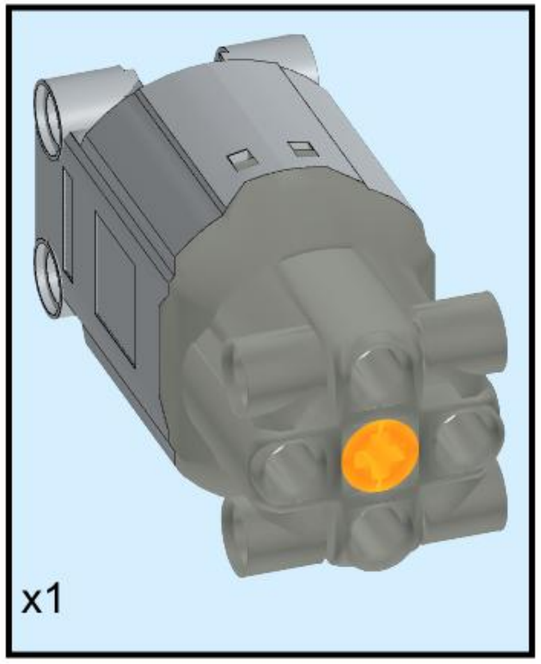

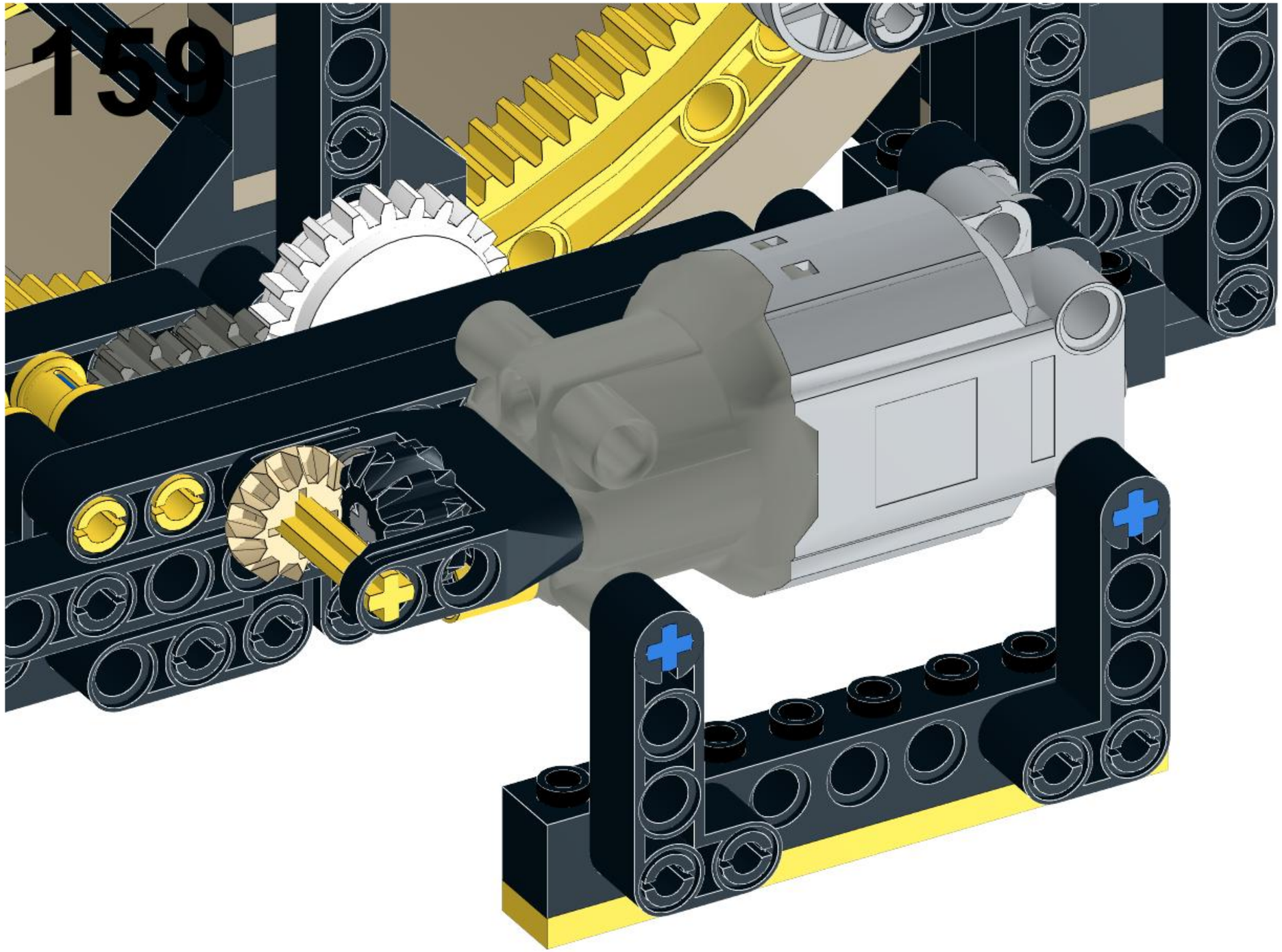
159

160

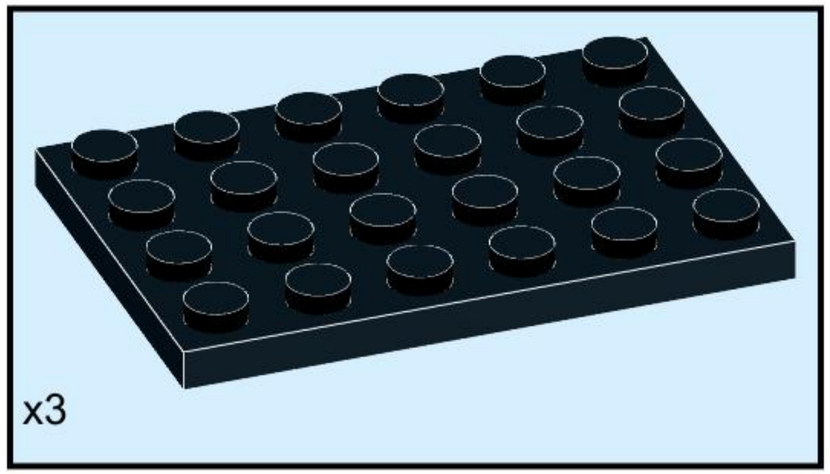

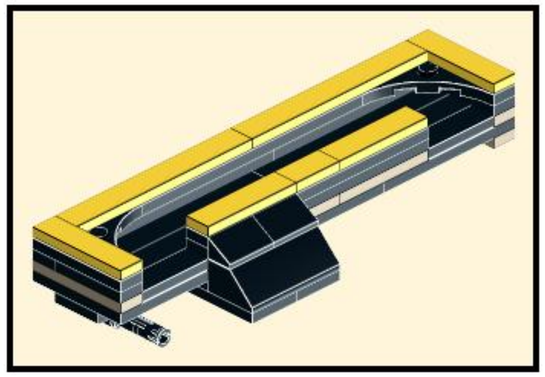

161

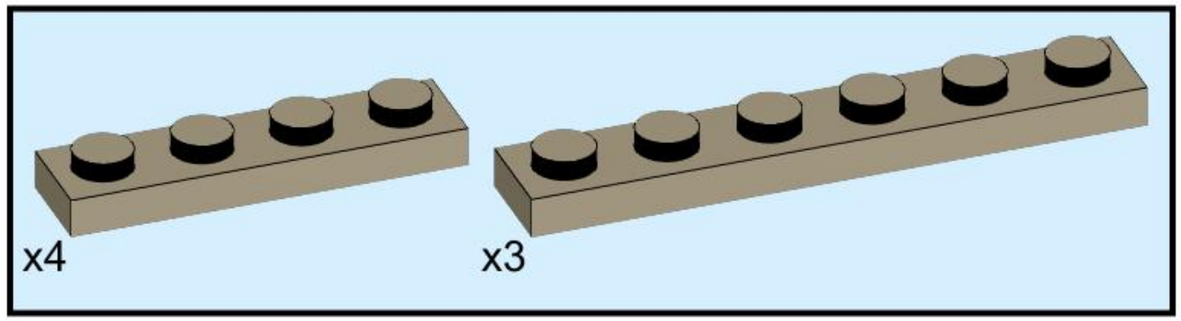

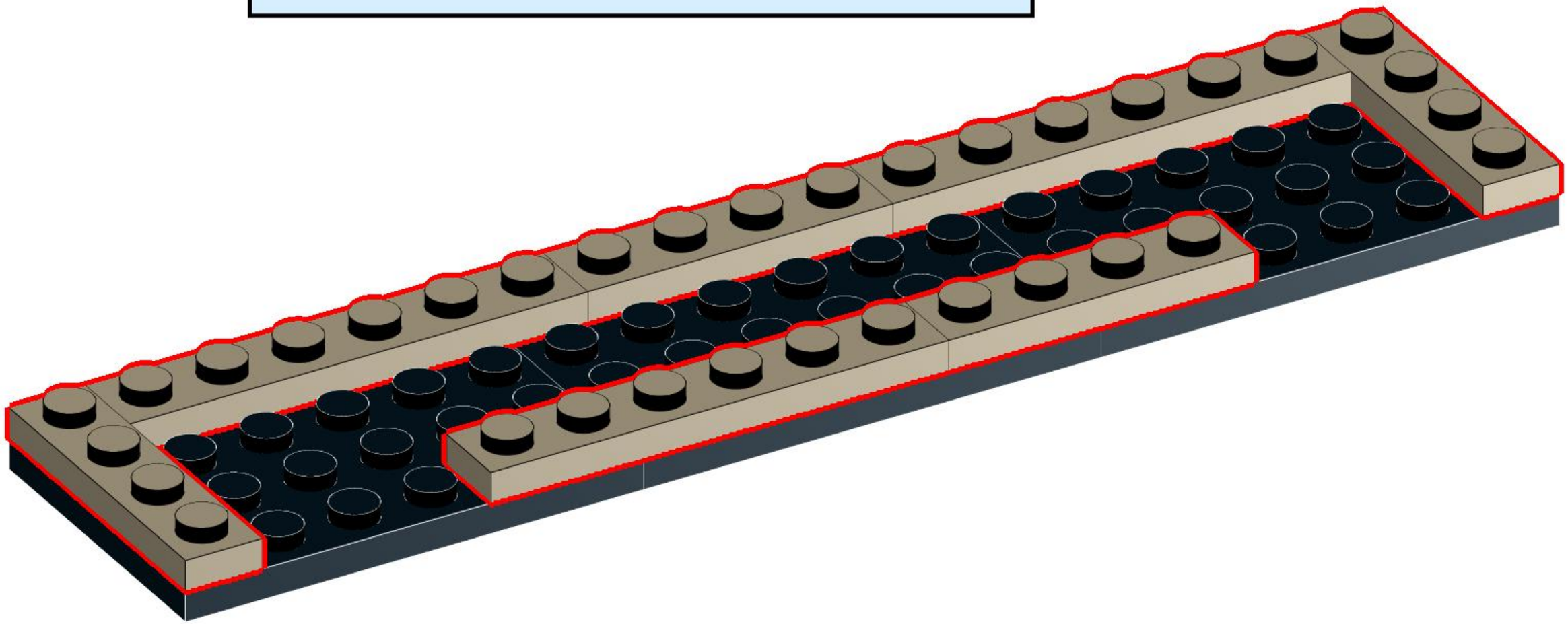

162

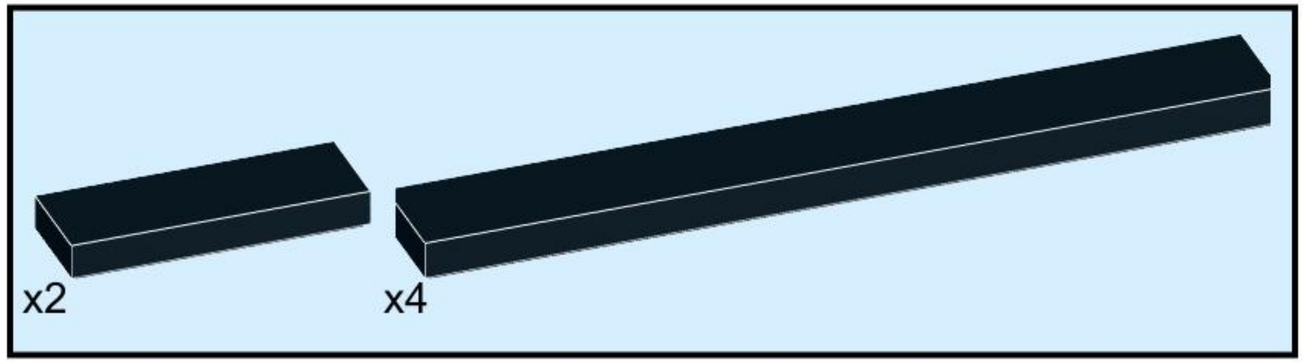

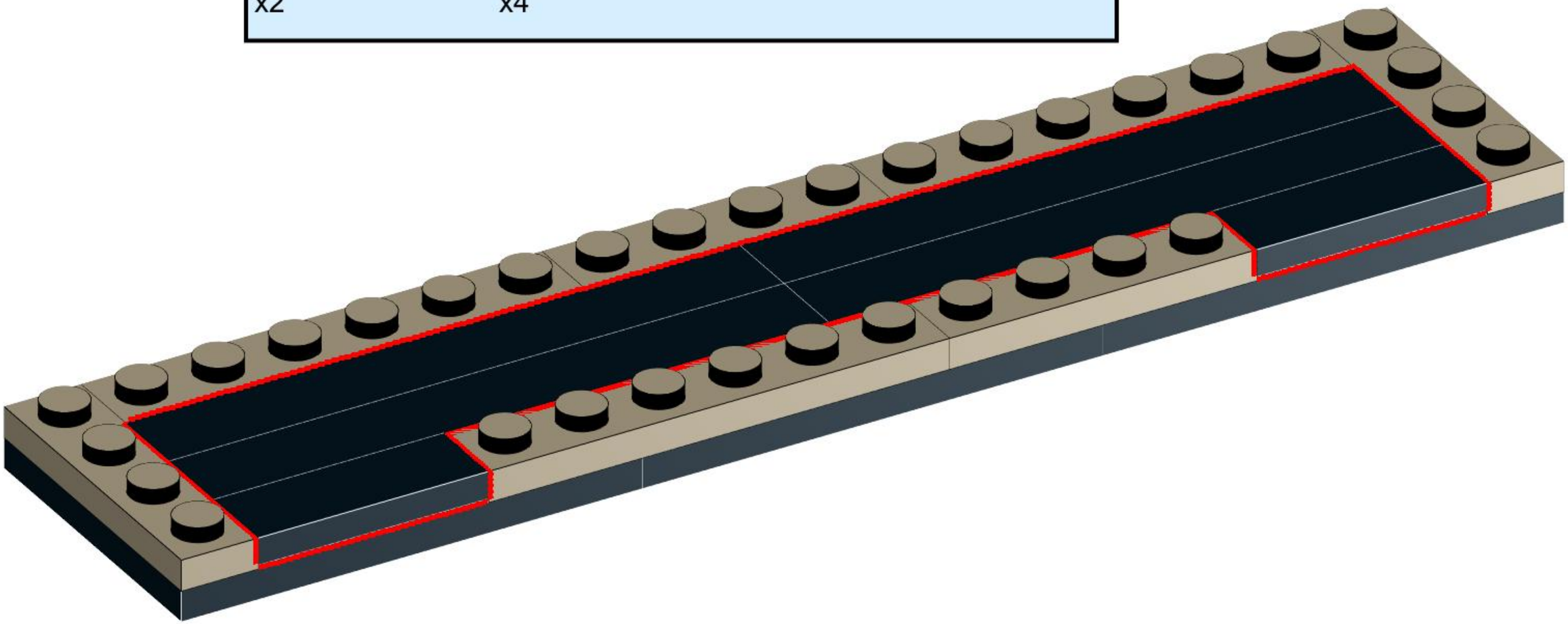

163

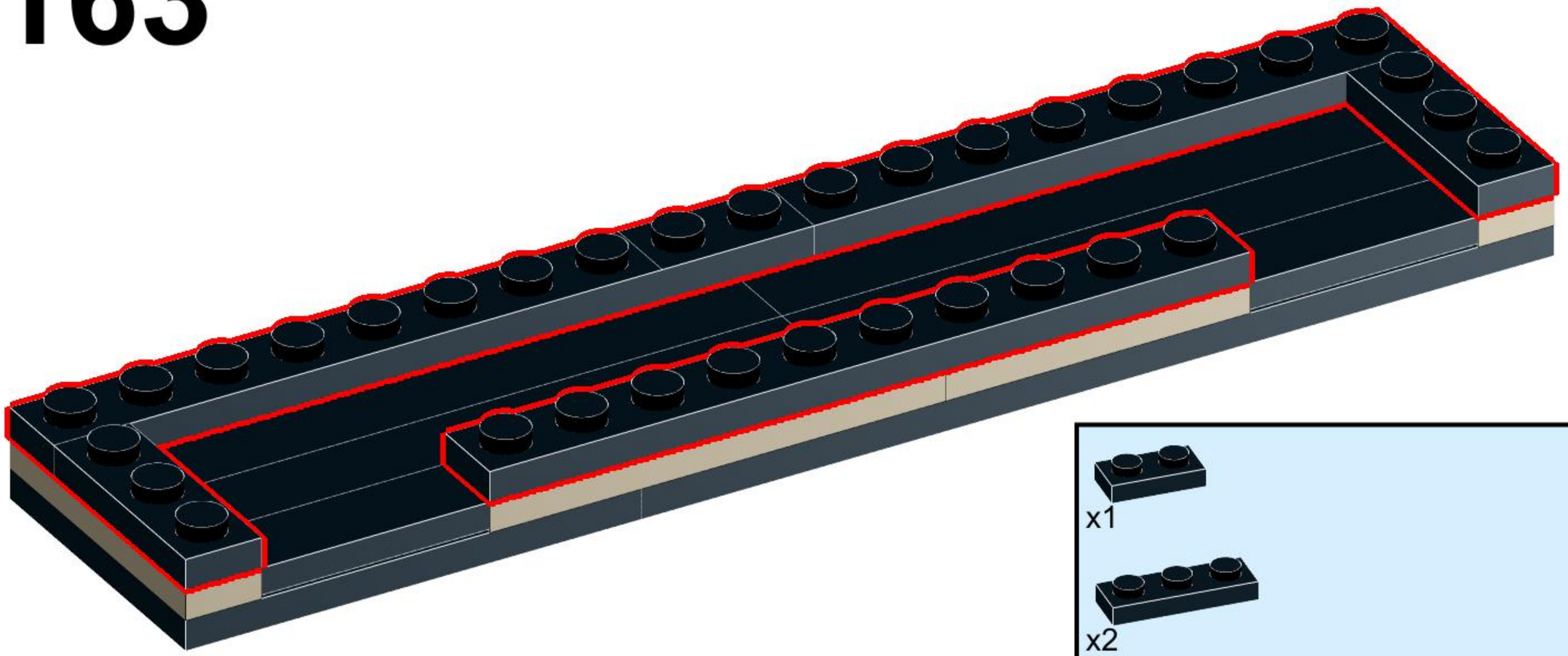

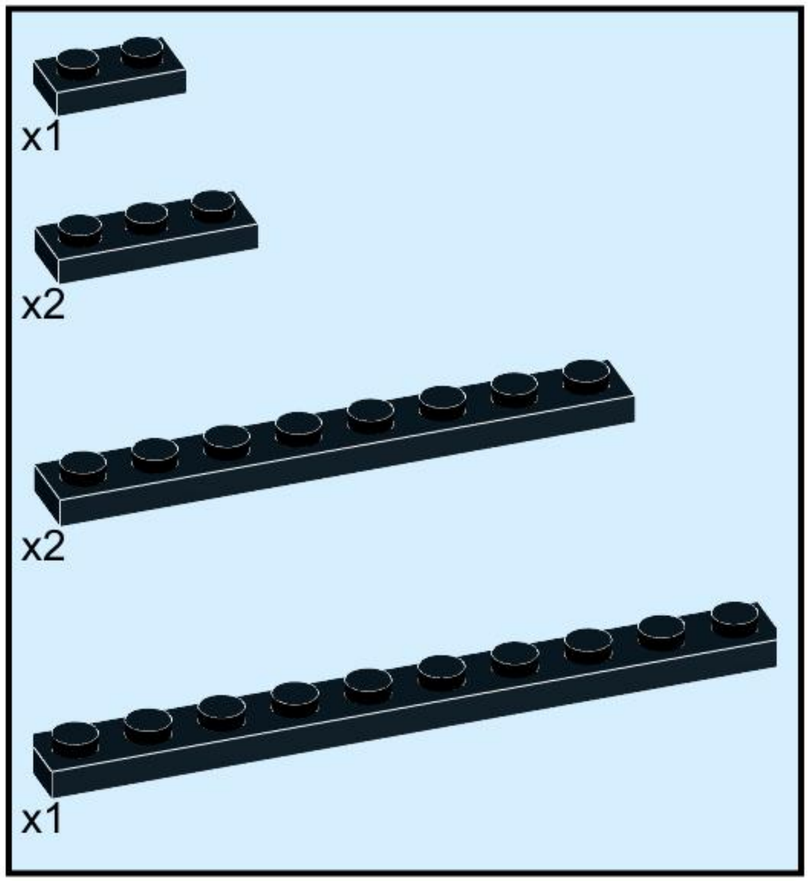

164

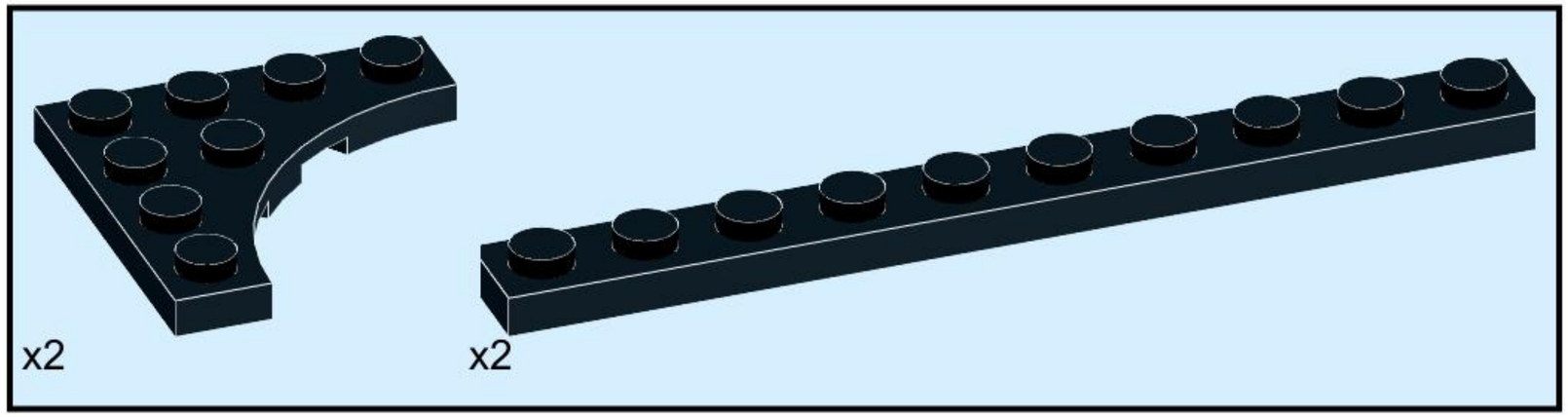

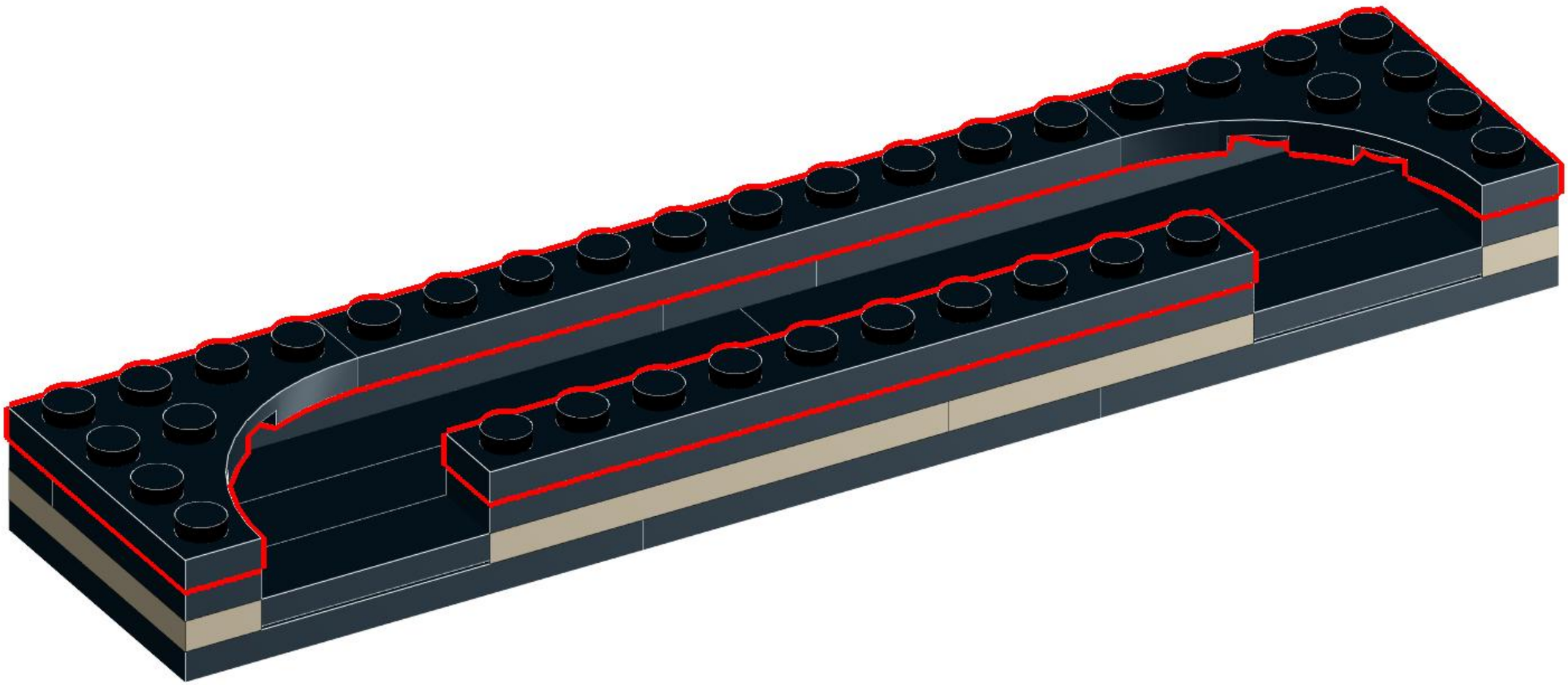

165

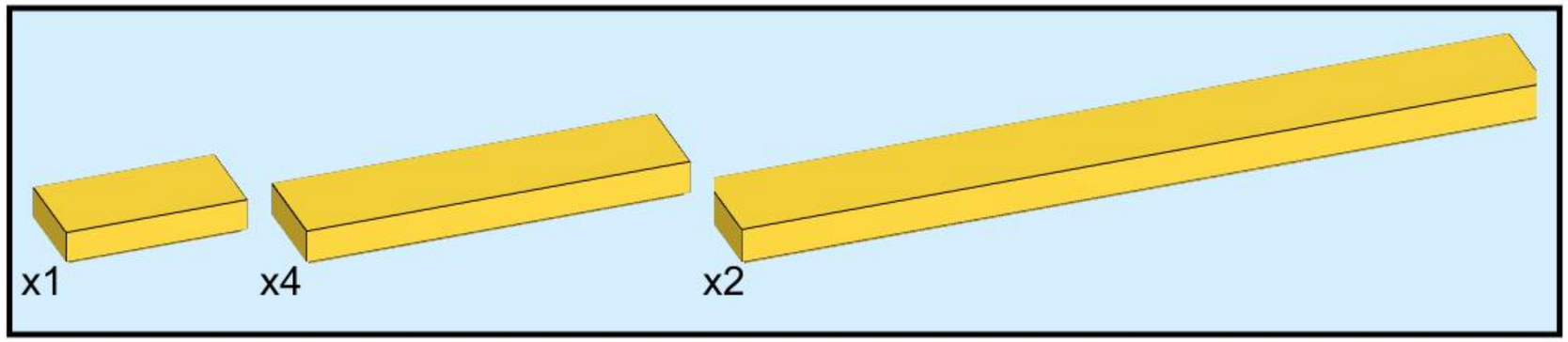

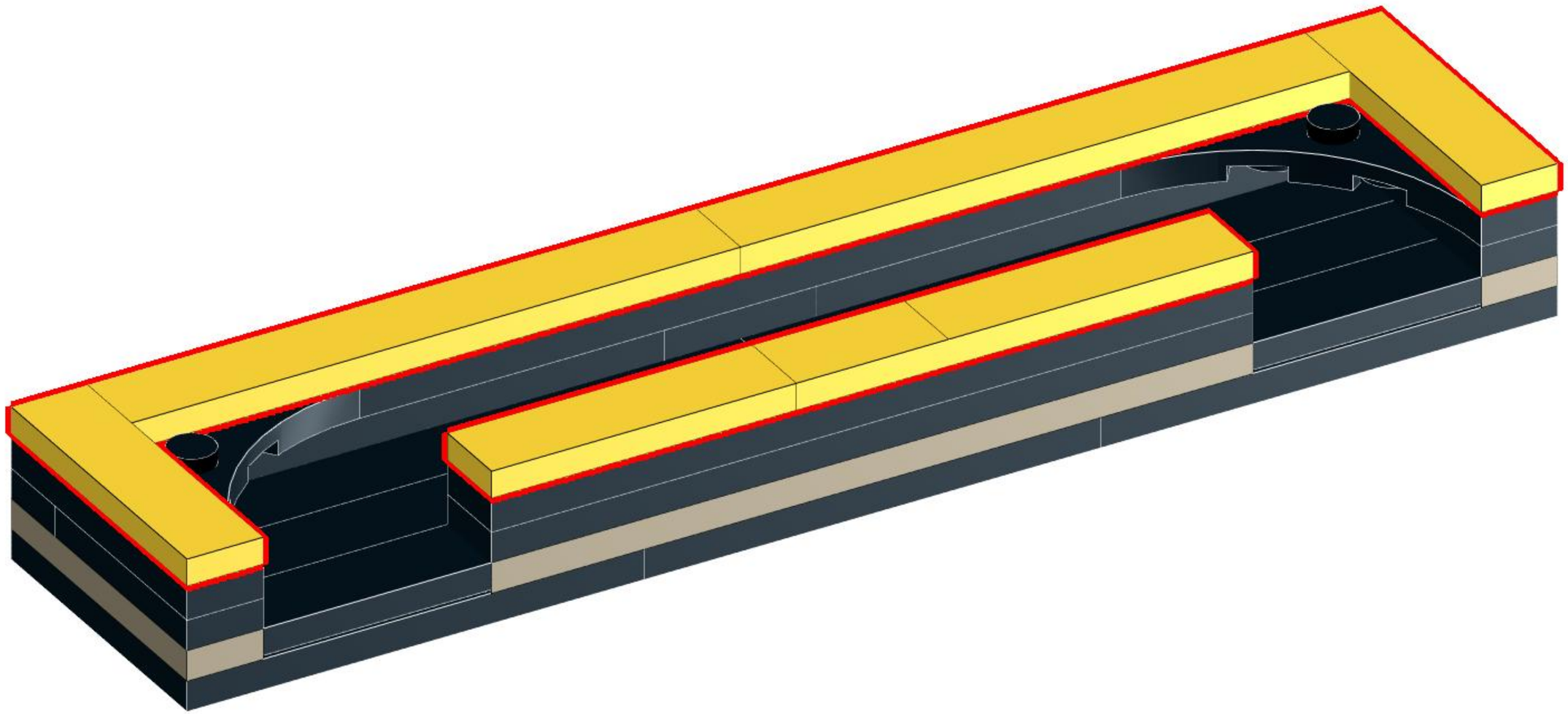

166

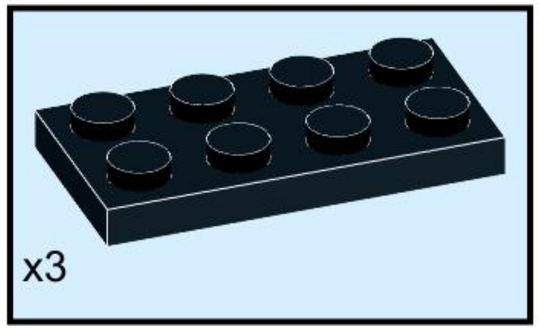

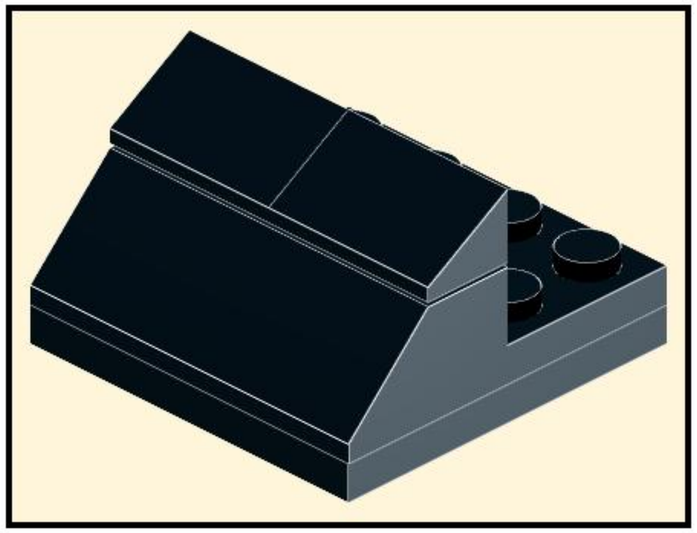

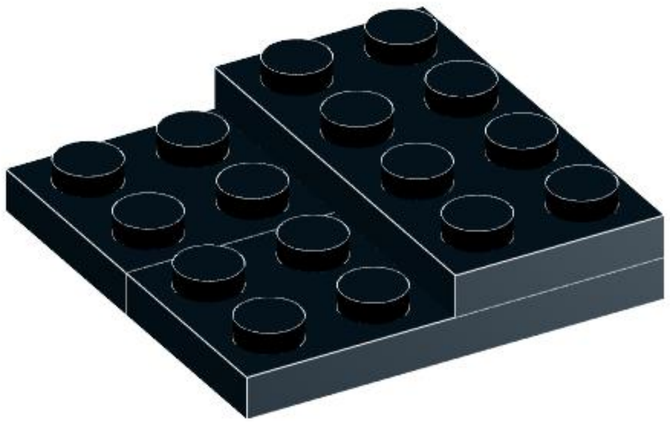

Note: This assembly is optional. In a loop where the preceeding GBC deposits a large volume of balls into this GBC at one time, some balls will "spill over" the output ramp and drop back into the wheel to be picked up on the next rotation. This assembly significantly reduces balls falling out the rear of the GBC. It is also helpful when running "stand-alone" with a large number of balls.

167

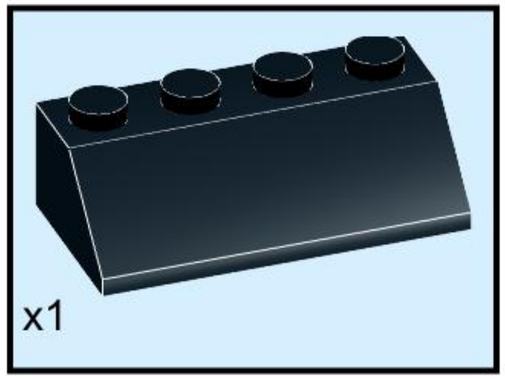

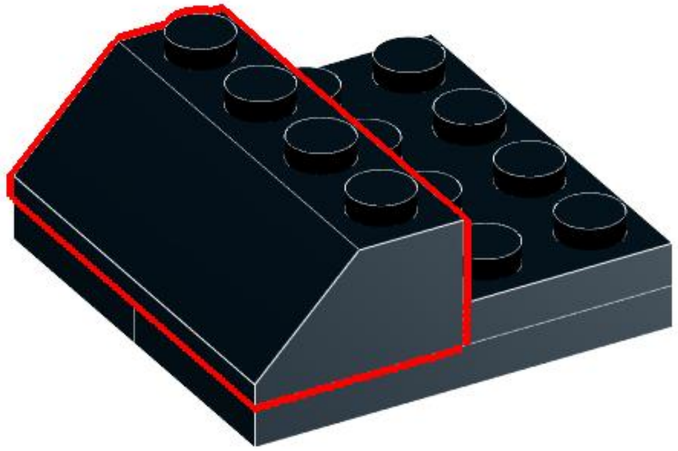

168

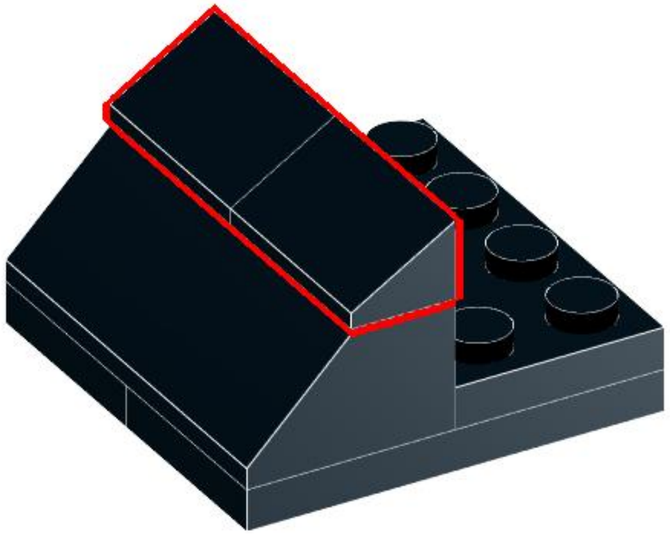

169

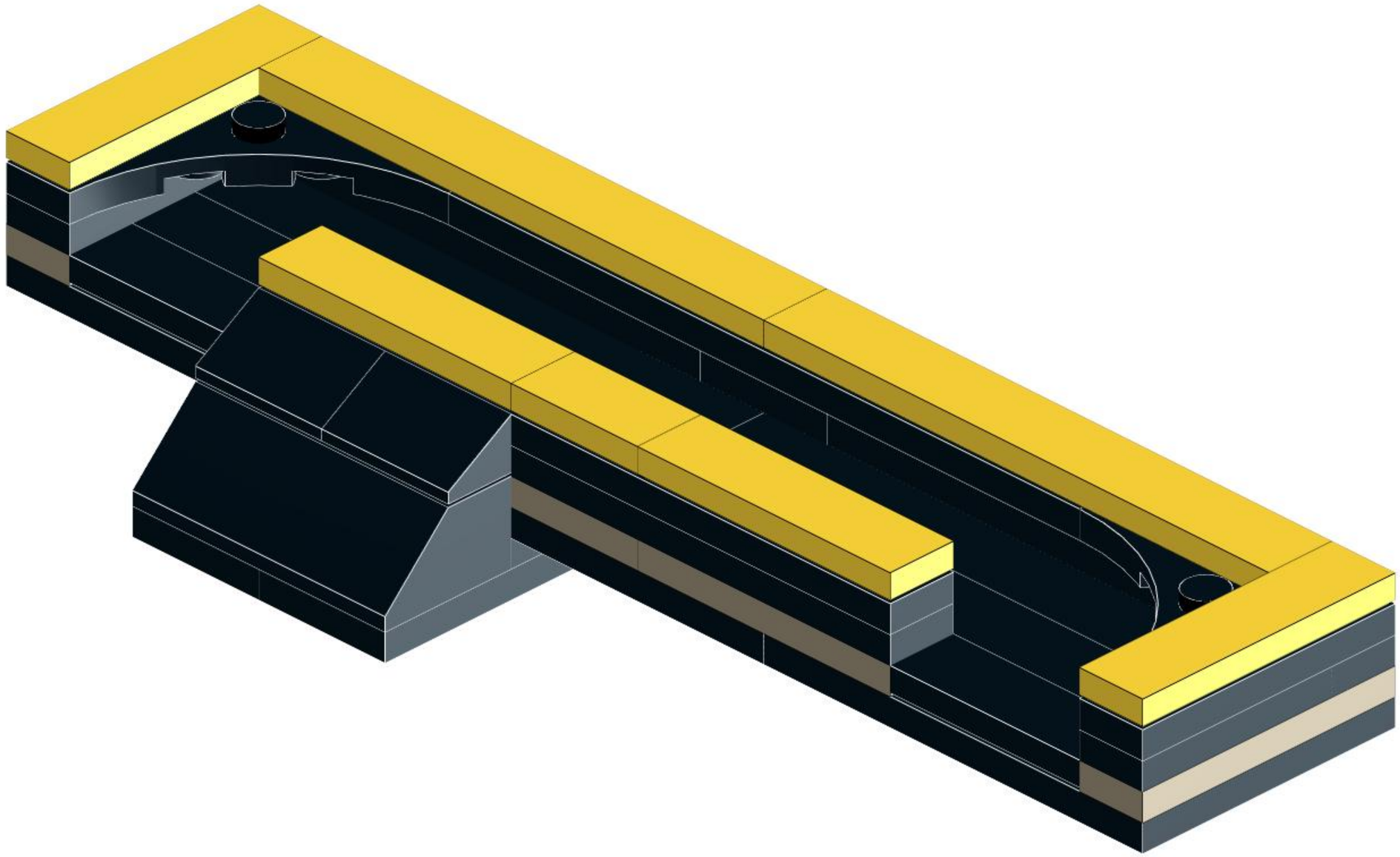

170

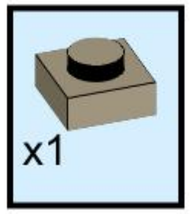

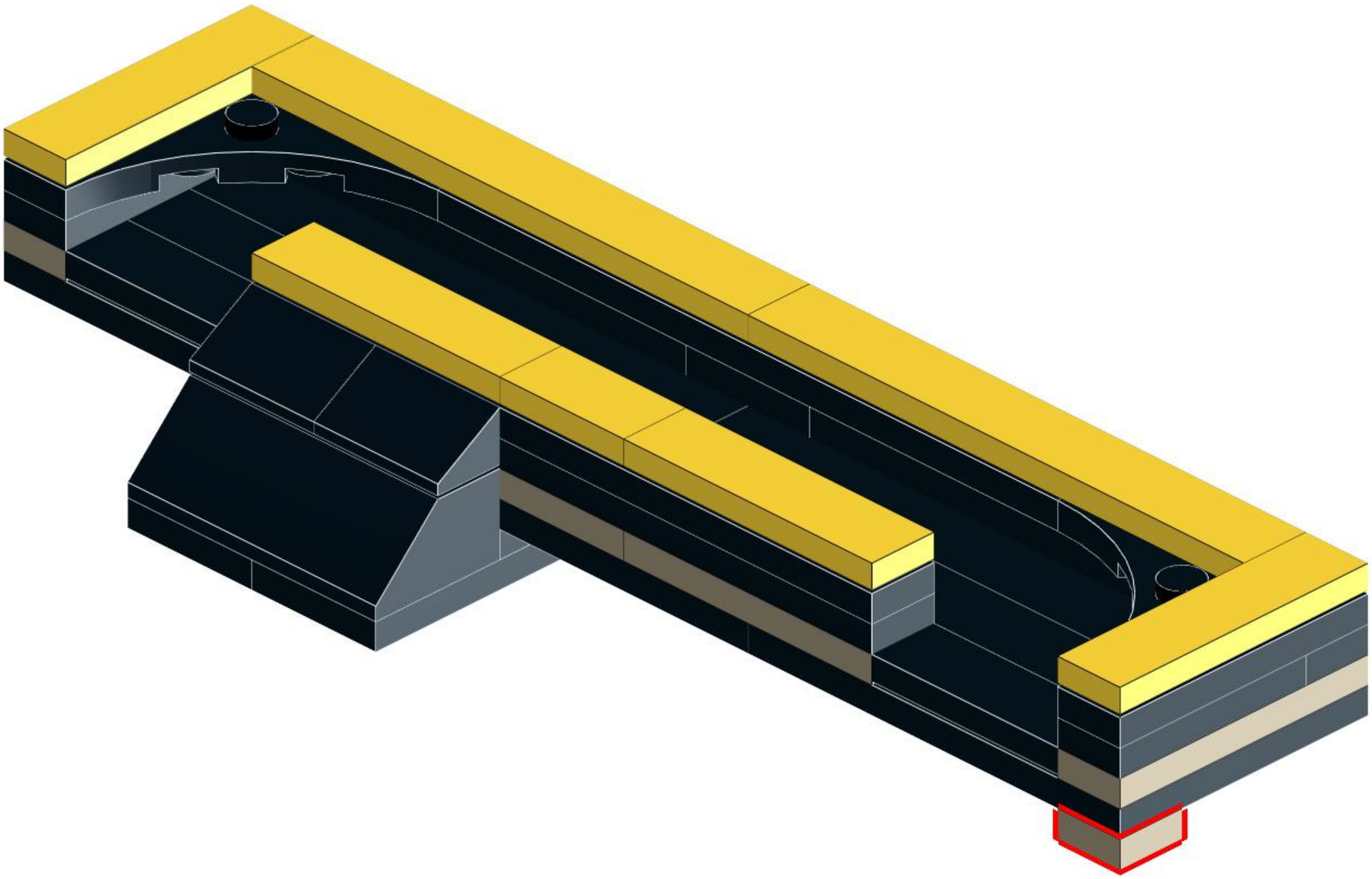

171

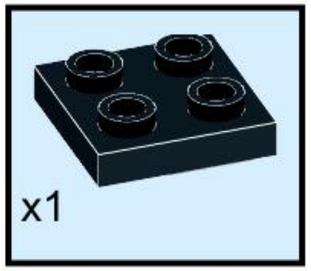

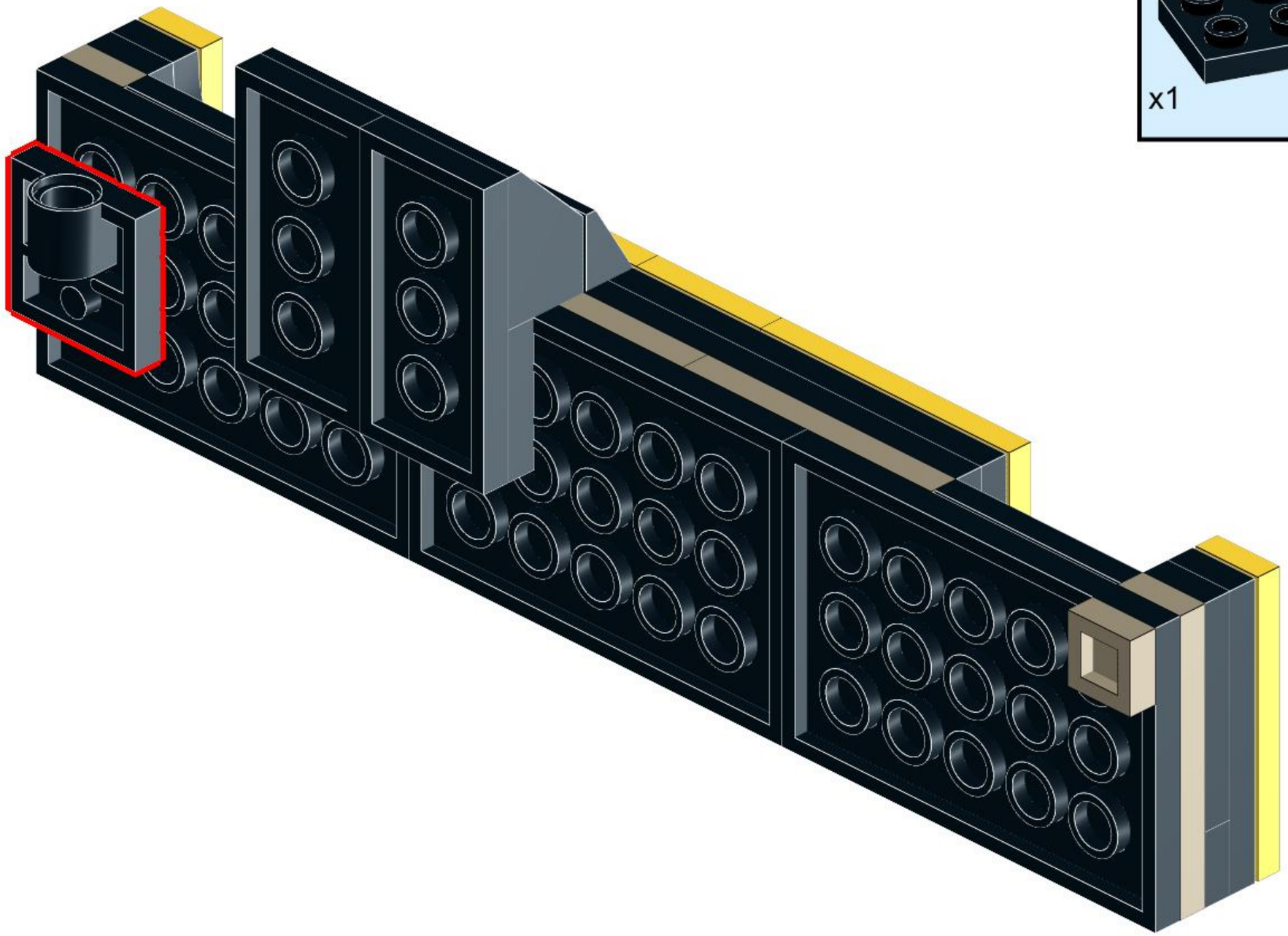

172

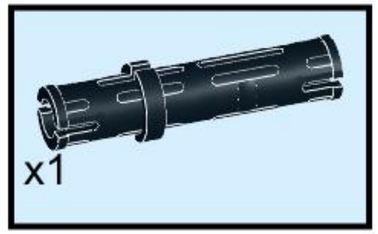

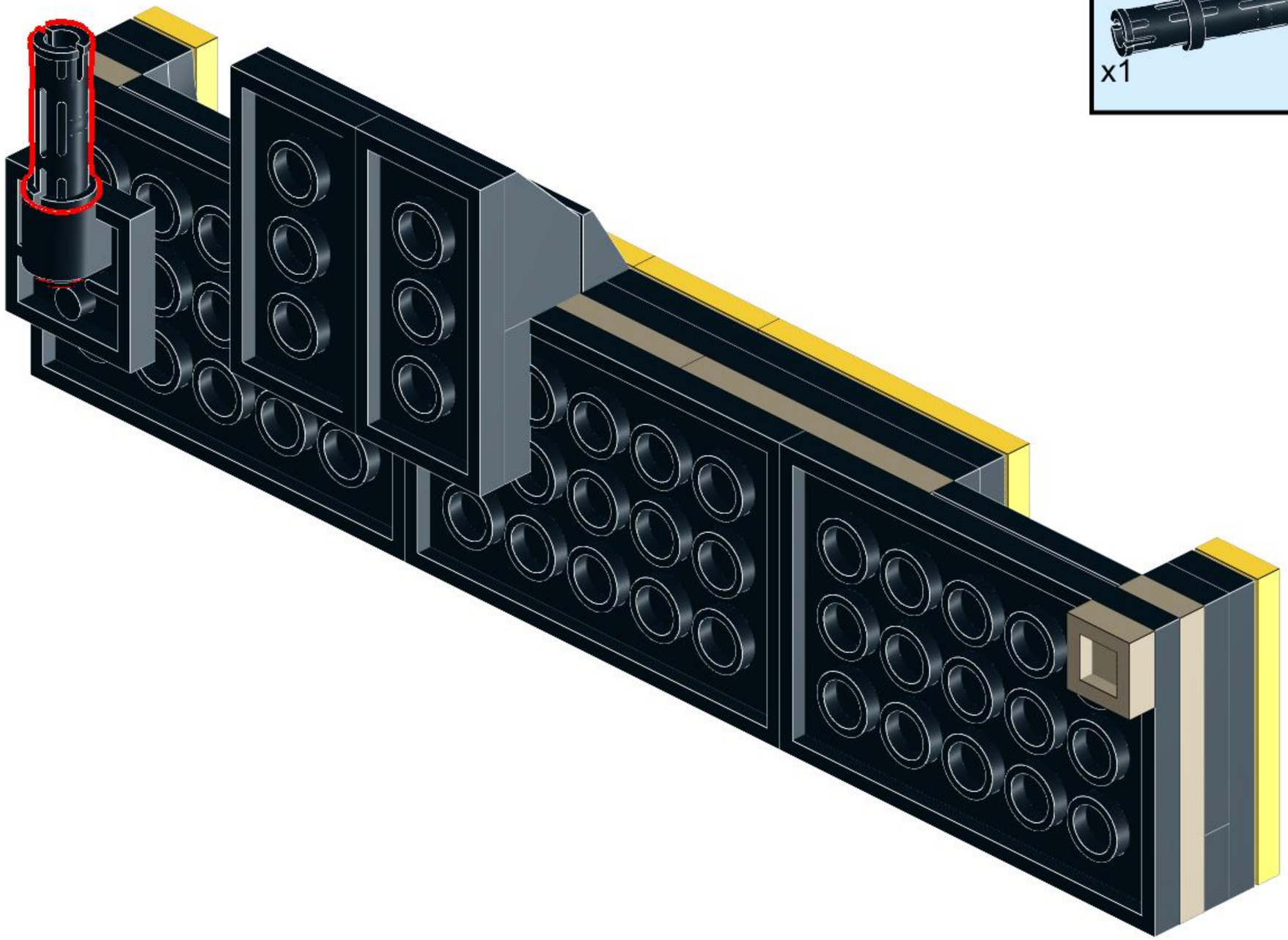

173

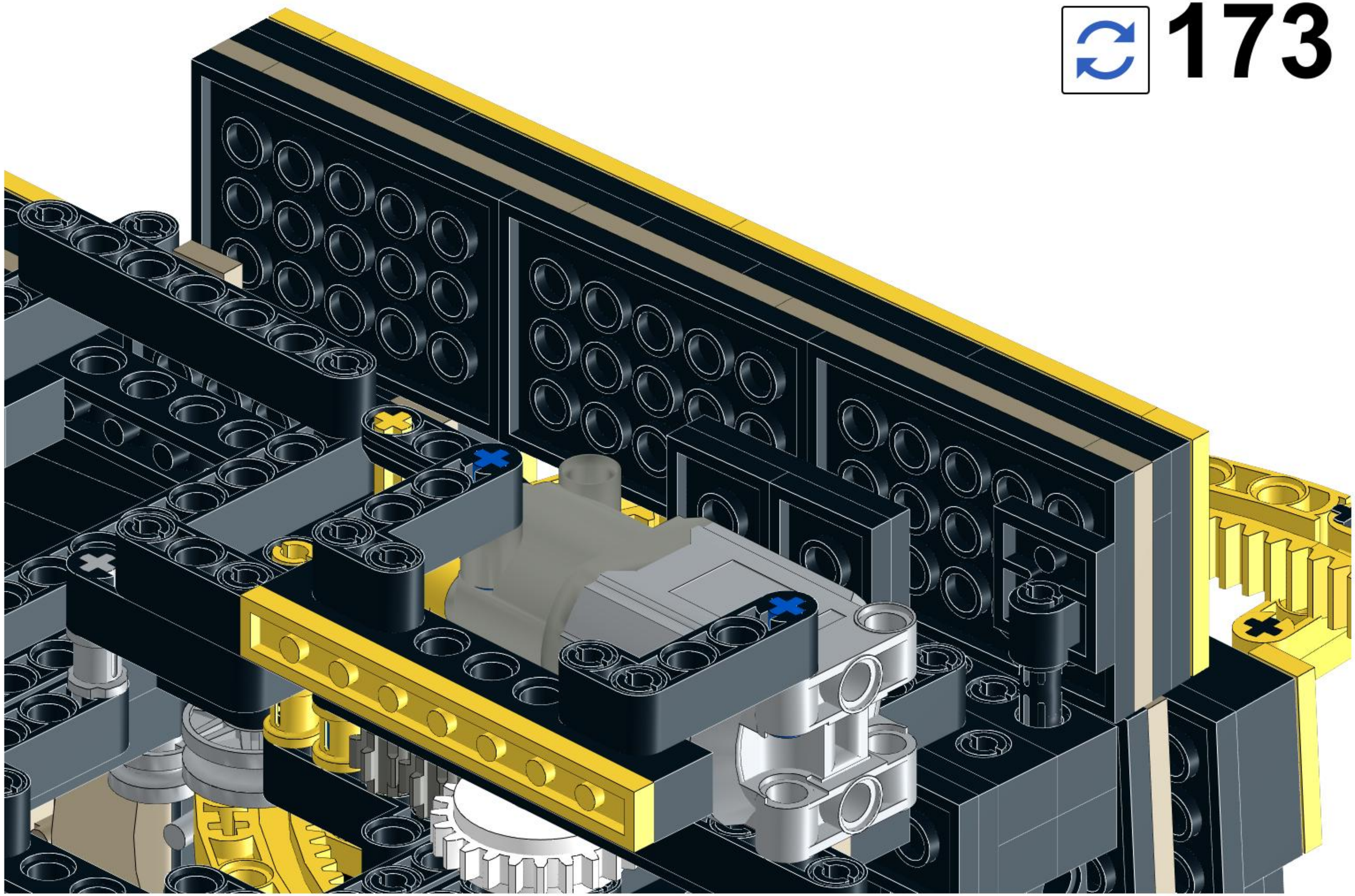

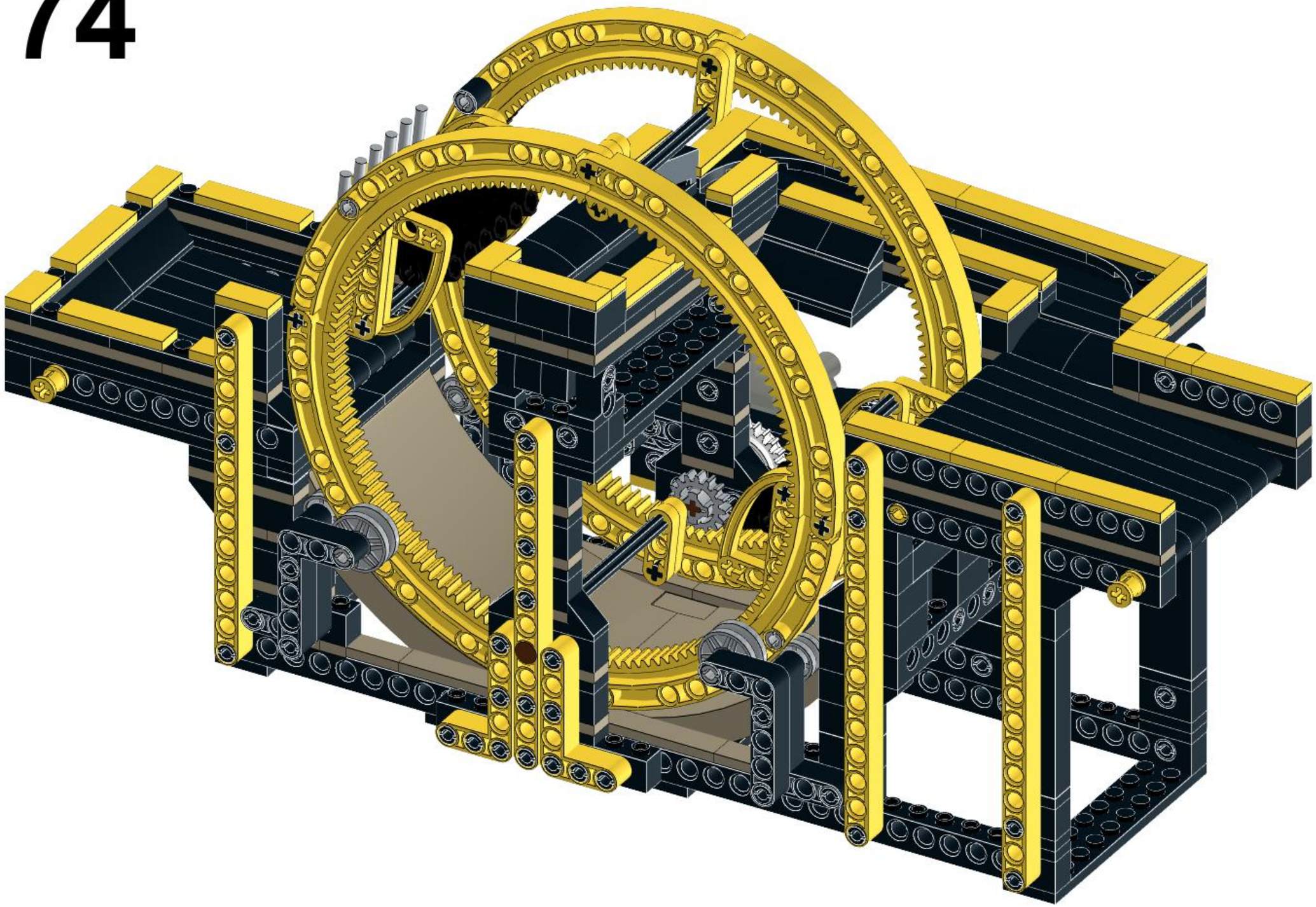

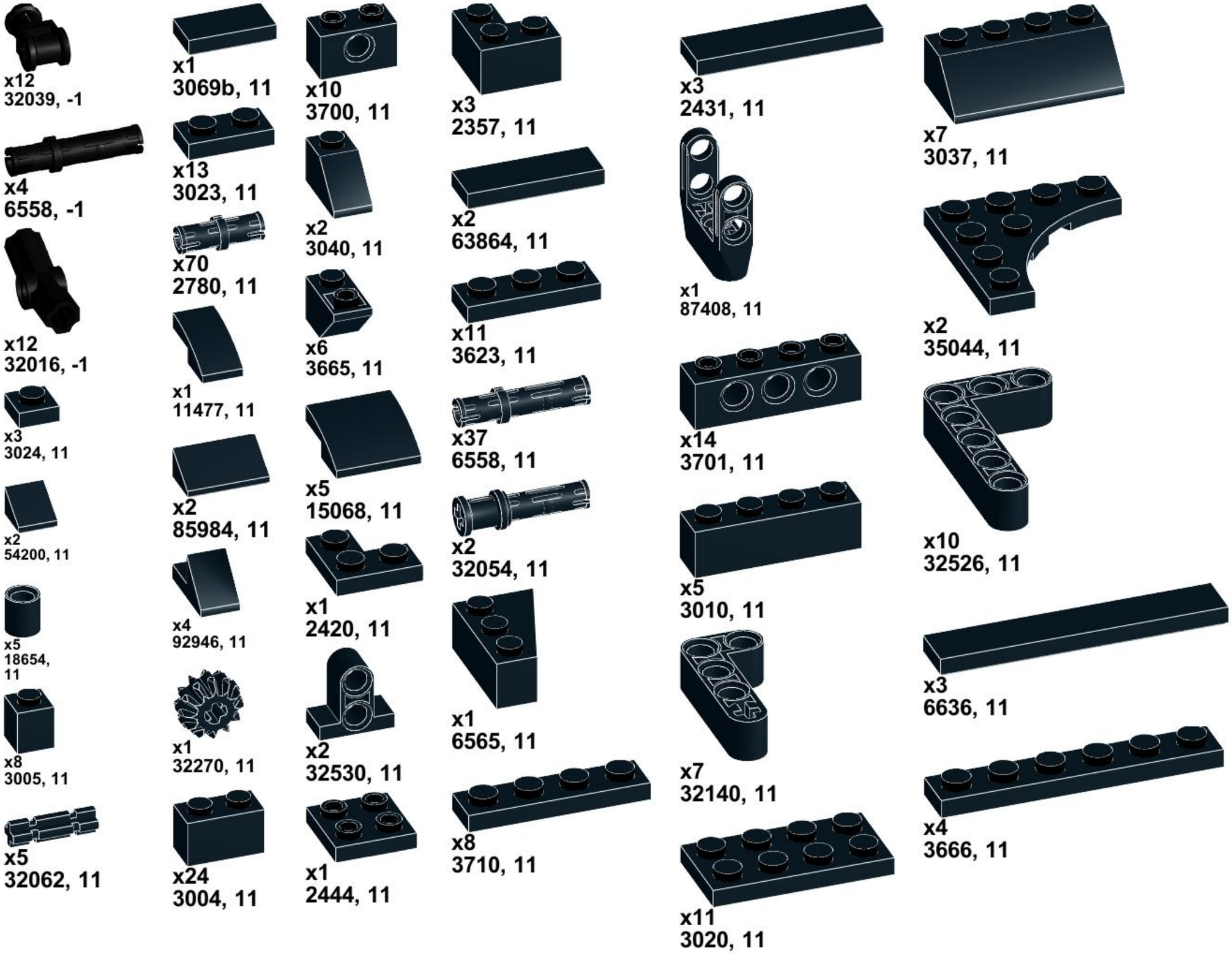
x12
32039, -1
x4
6558, -1
x12
32016, -1
x3
3024, 11
x2
54200, 11
x5
18654,
11
x8
3005, 11
x5
32062, 11
x1
3069b, 11
x13
3023, 11
x70
2780, 11
x1
11477, 11
x2
85984, 11
x4
92946, 11
x1
32270, 11
x24
3004, 11
x10
3700, 11
x2
3040, 11
x6
3665, 11
x5
15068, 11
x1
2420, 11
x2
32530, 11
x1
2444, 11
x3
2357, 11
x2
63864, 11
x11
3623, 11
x37
6558, 11
x2
32054, 11
x1
6565, 11
x8
3710, 11
x3
2431, 11
x1
87408, 11
x14
3701, 11
x5
3010, 11
x7
32140, 11
x11
3020, 11
x7
3037, 11
x2
35044, 11
x10
32526, 11
x3
6636, 11
x4
3666, 11

x2
3894, 11

x1
3795, 11

x2
2454, 11

x1
32524, 11

x3
3032, 11

x4
3707, 11

x3
3460, 11

x4
4162, 11

x3
3702, 11

x2
3007, 11

x1
3035, 11

x9
40490, 11

x12
4477, 11

x2
3737, 11

x6
2730, 11

x3
3832, 11

x2
3030, 11

x9
32525, 11

x1
60479, 11

x3
3895, 11

x1
3029, 11

x3
41239, 11

x2
32278, 11

x5
3703, 11

x1
32002, 85

x2
10928,
85

x2
3713, 86

x4
42610, 86

x12
3673, 86

x3
4519, 86

x4
56902, 86

x2
94925, 86

x12
30374, 86

x1
99499c01, 86

x1
60c01, 1

x12
32062, 5

x2
3022, 5

x2
24316, 88

x1
15462, 88

x5
3024, 69

x11
3023, 69

x6
3069b, 69

x22
3710, 69

x4
6636, 69

x8
3666, 69

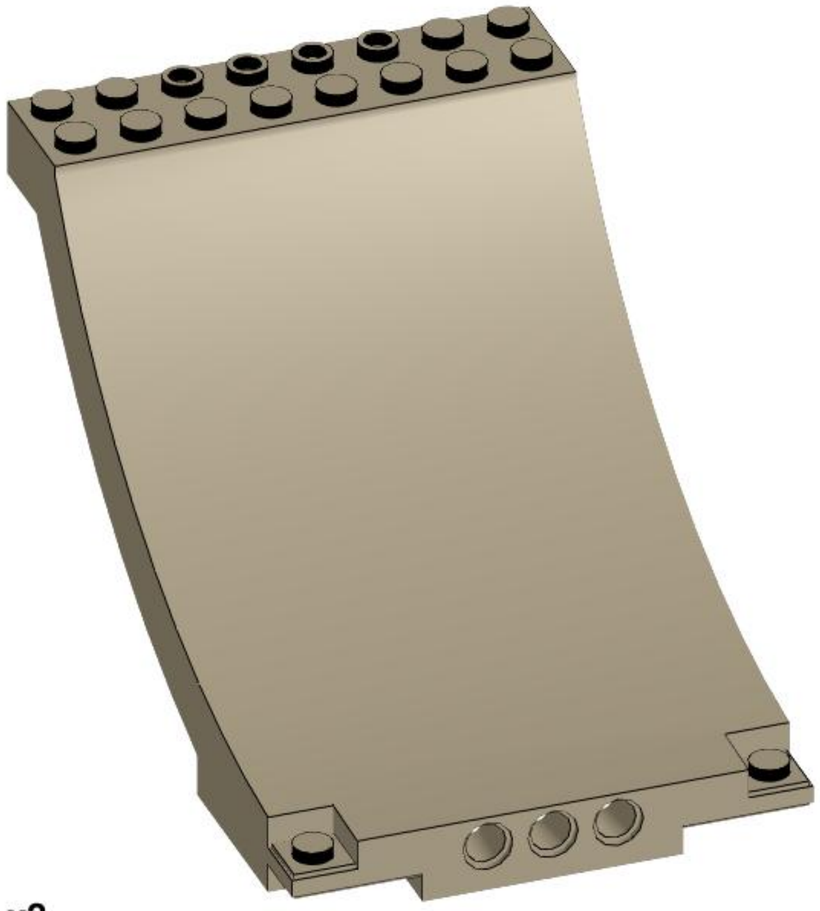

x2
43085, 69

x1
6589, 2

x4
4265c,
3

x5
3070b, 3

x8
3069b, 3

x1
32013, 3

x12
32039, 3

x8
6632, 3

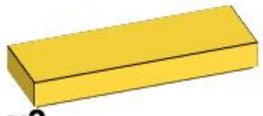

x3
63864, 3

x5
32054, 3

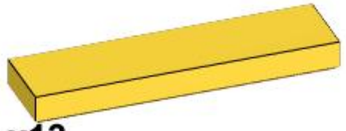

x13
2431, 3

x8
32250, 3

x2
32526, 3

x1
44294, 3

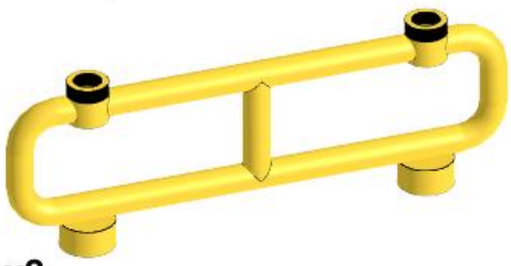

x2
2486, 3

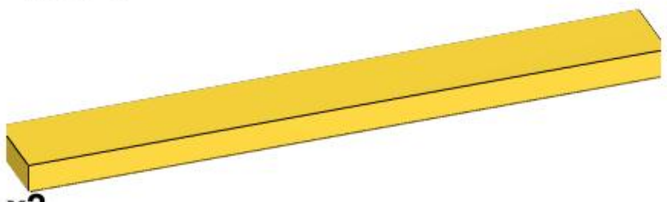

x2
4162, 3

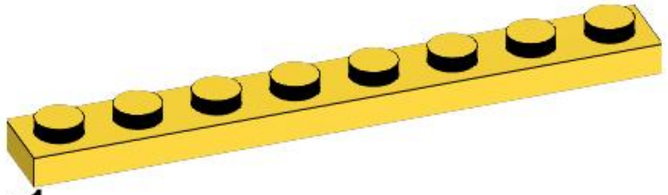

x1
3460, 3

x2
41239, 3

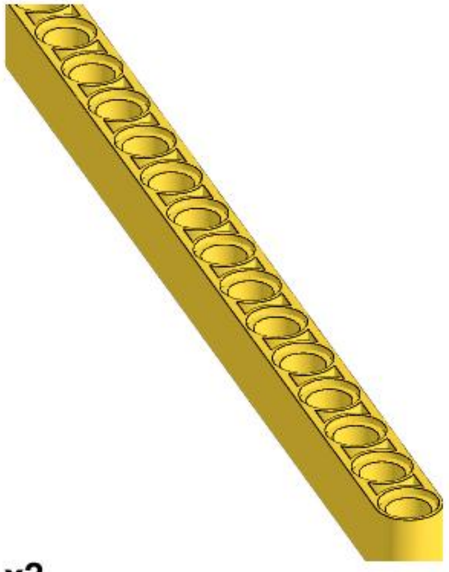

x2
32278, 3

x8
24121, 3

x6
43093, 7

x5
6558, 7