TUMBLE DRYER

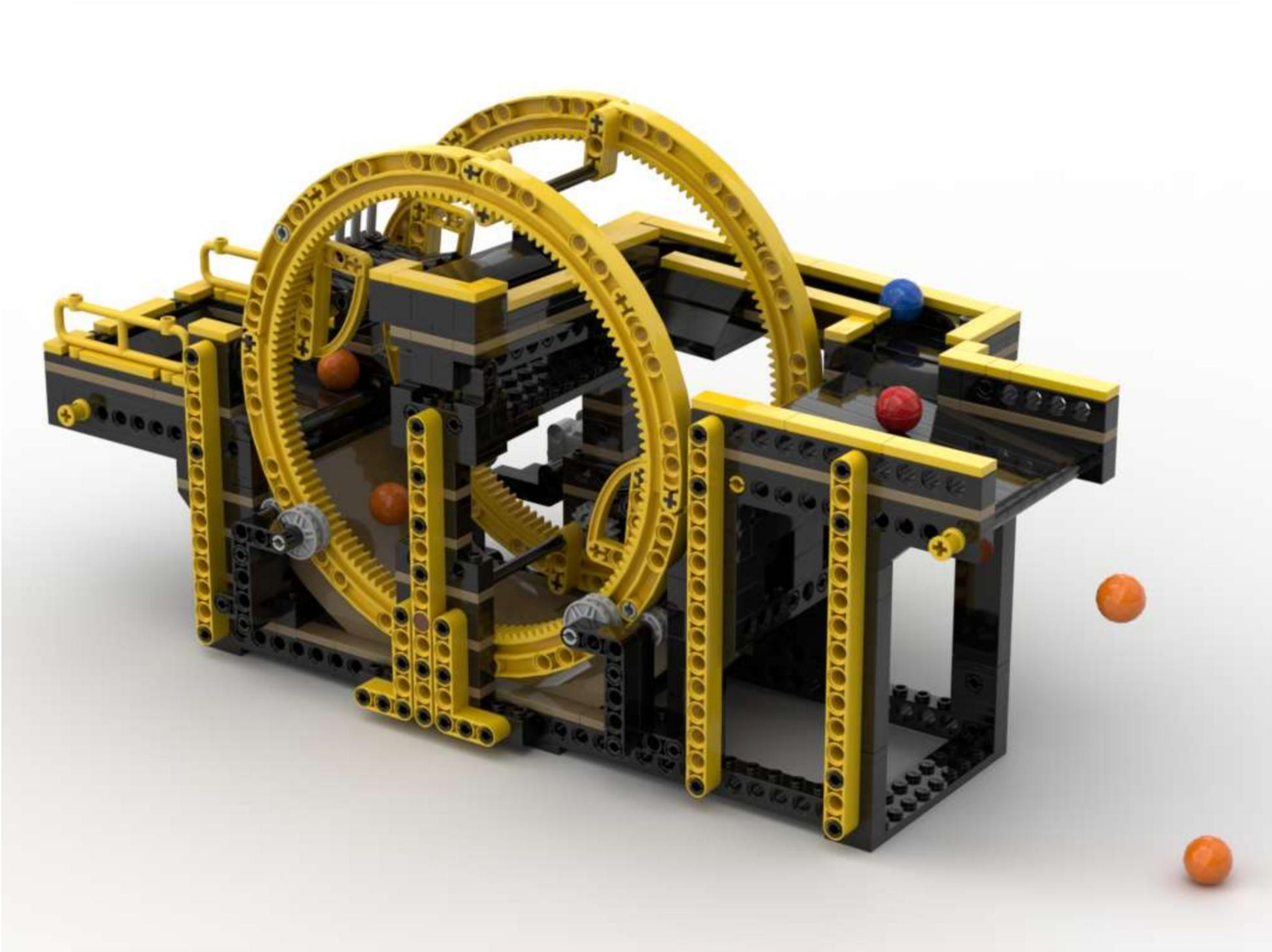

Designed by
Ryk Field
2018

REF04

Ver 1.2

The base of the Tumble Dryer is built from two large curved sections, commonly referred to as "Skateboard Ramps" which were released in a variety of sport-themed sets from 2002 through 2004.
These instructions are made with Dark Tan ramps, and matching Dark Tan parts throughout. Pictures of the module using each alternate colour is shown on the following page. Modern grey parts are used for highlights in the two grey models.

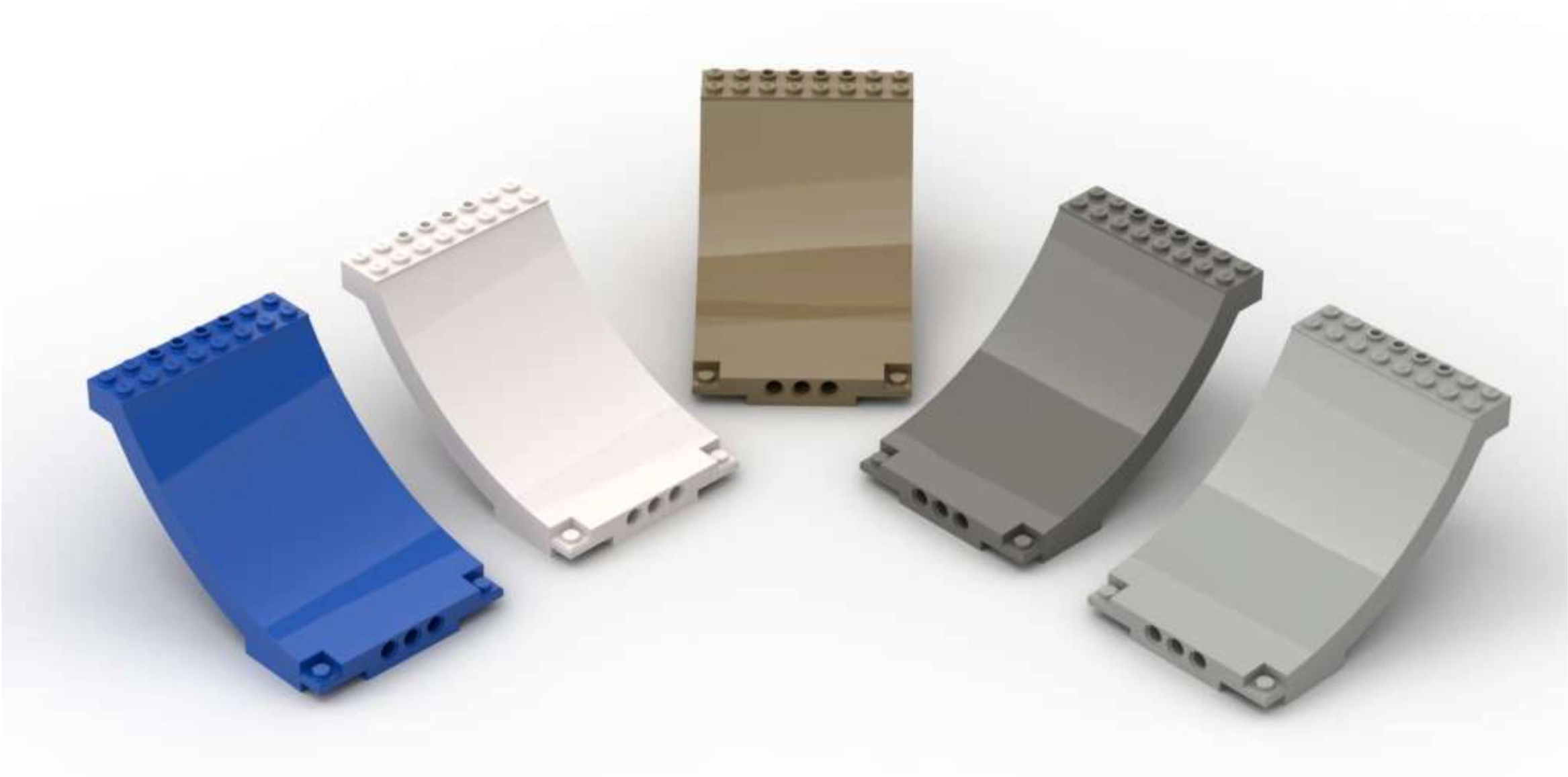

White Ramp

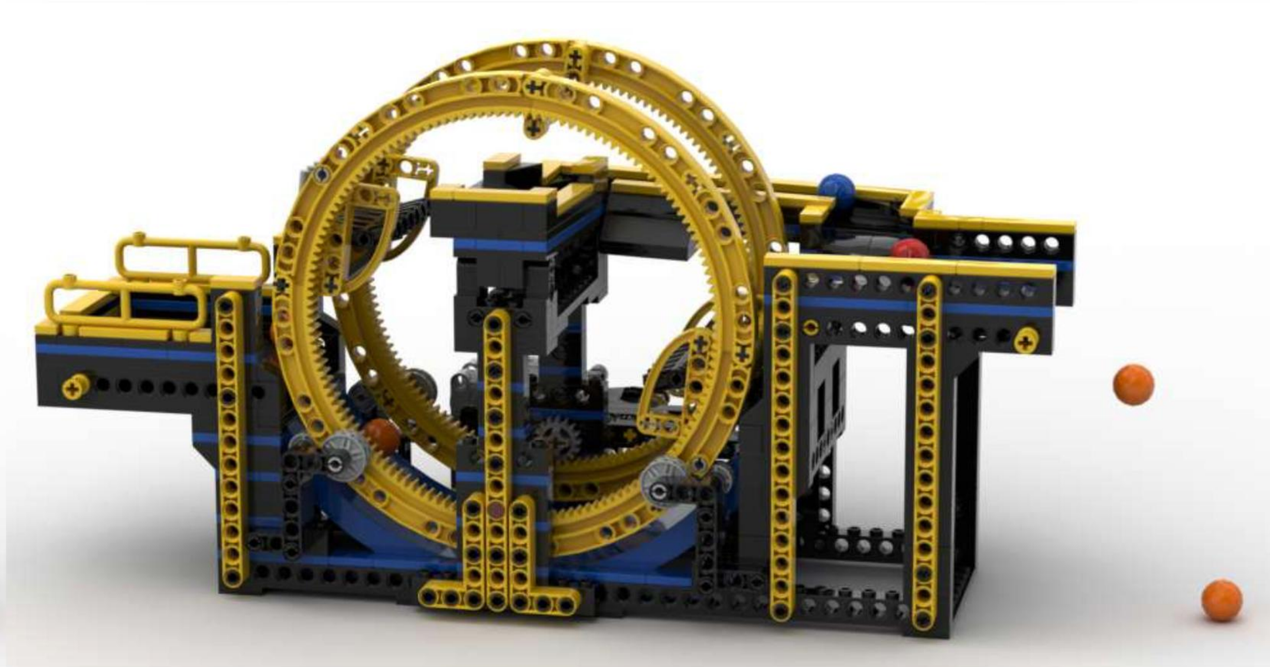

Blue Ramp

Light Grey Ramp

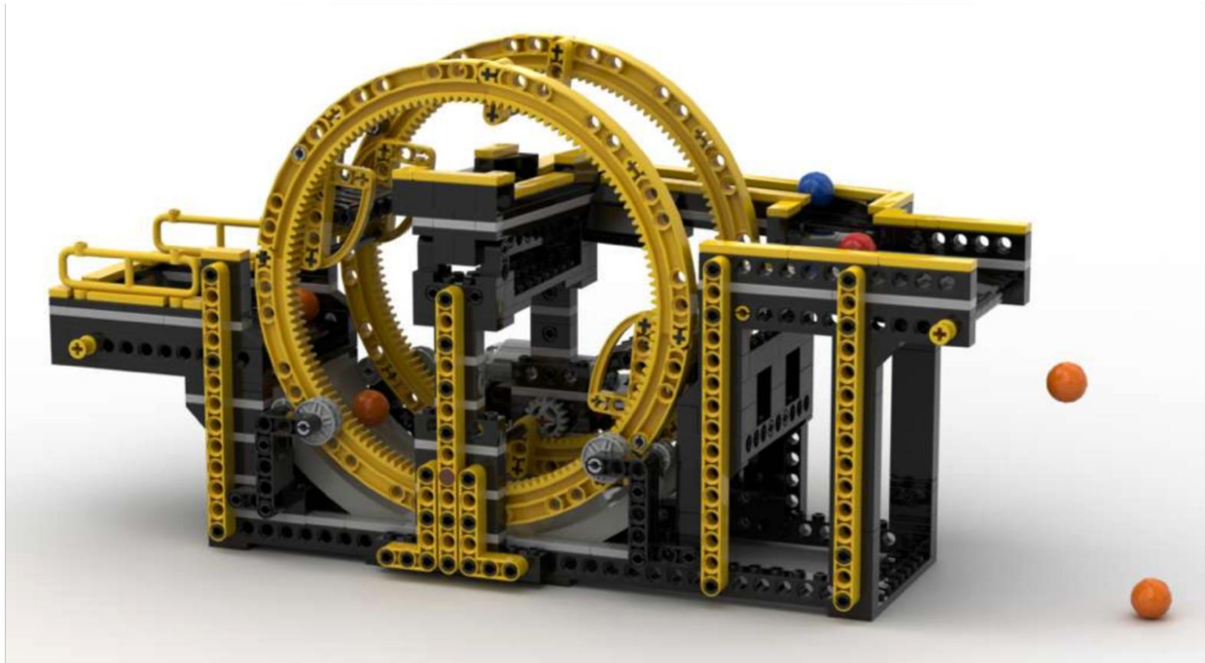

Dark Grey Ramp

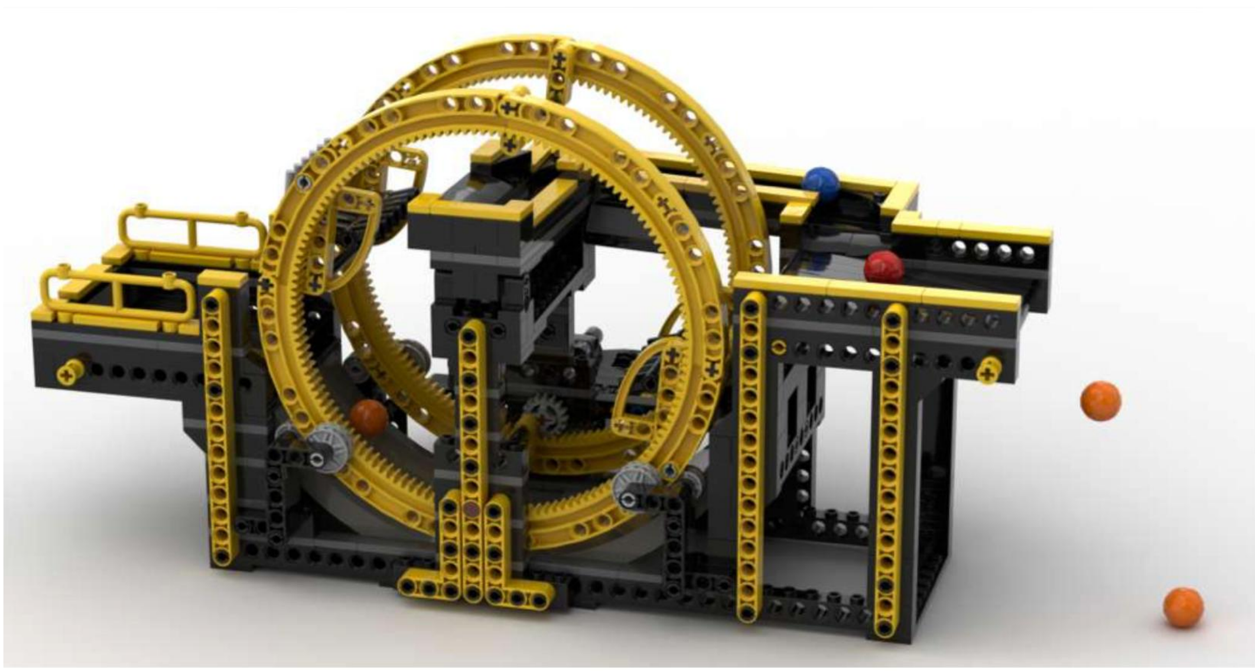

1

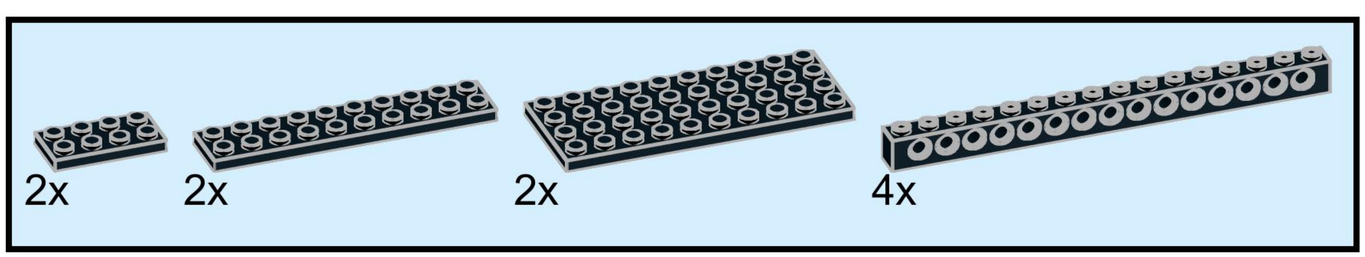

2

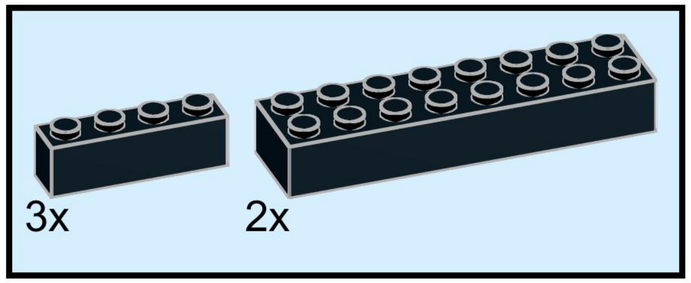

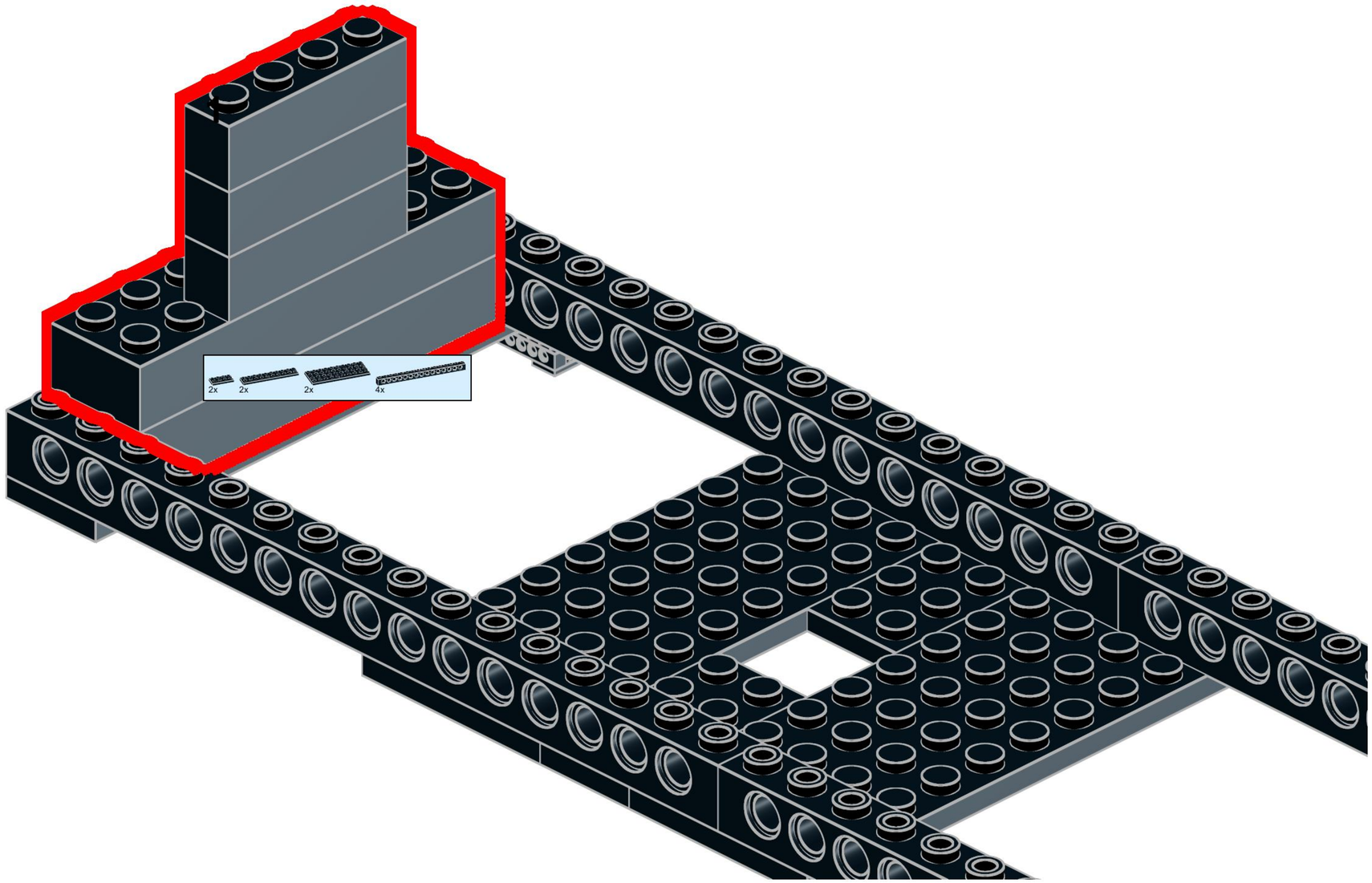

3

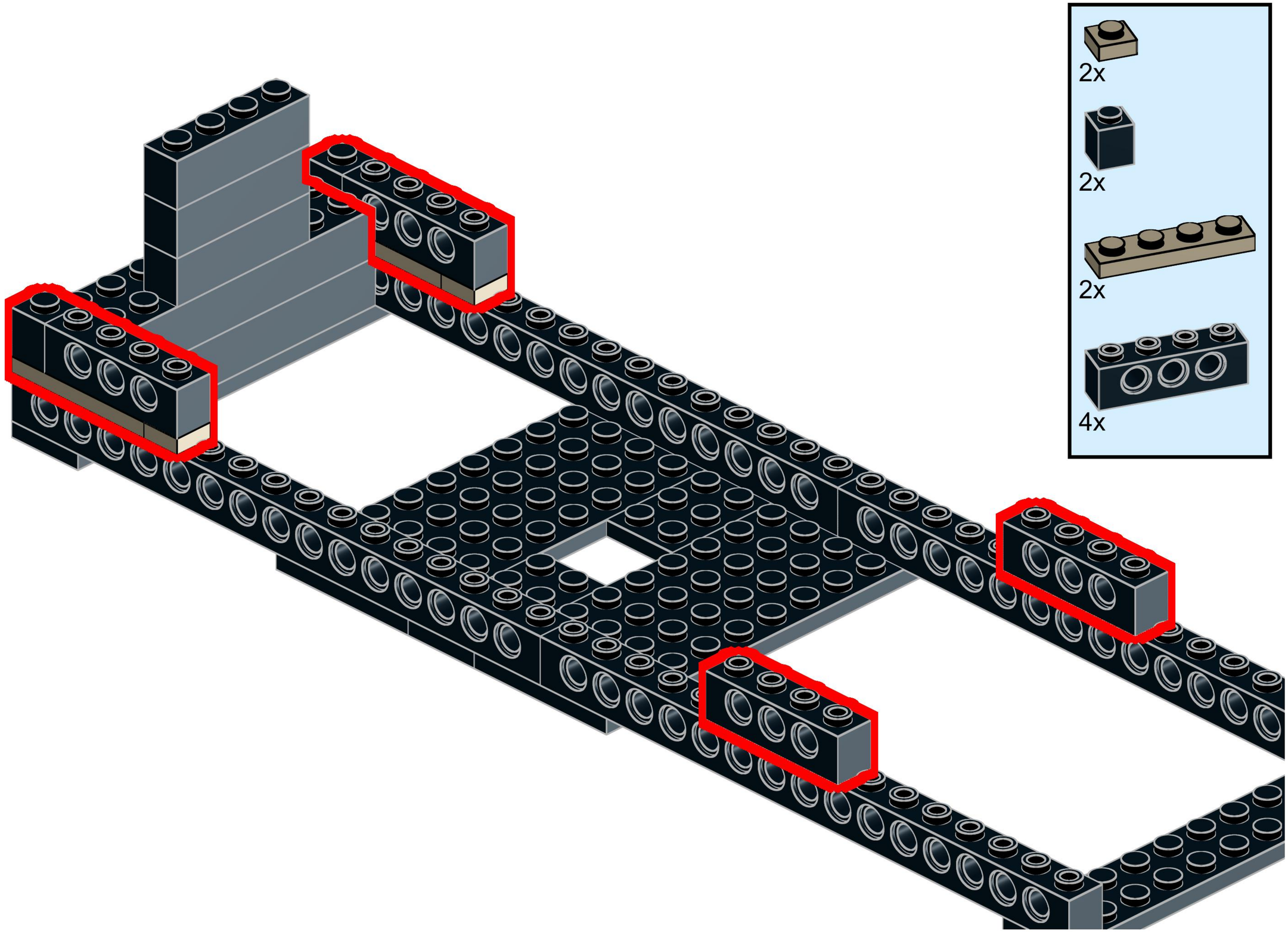

4

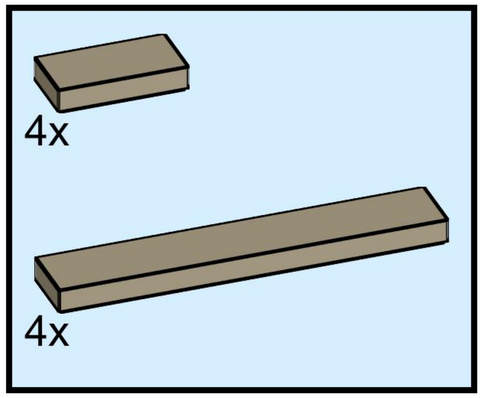

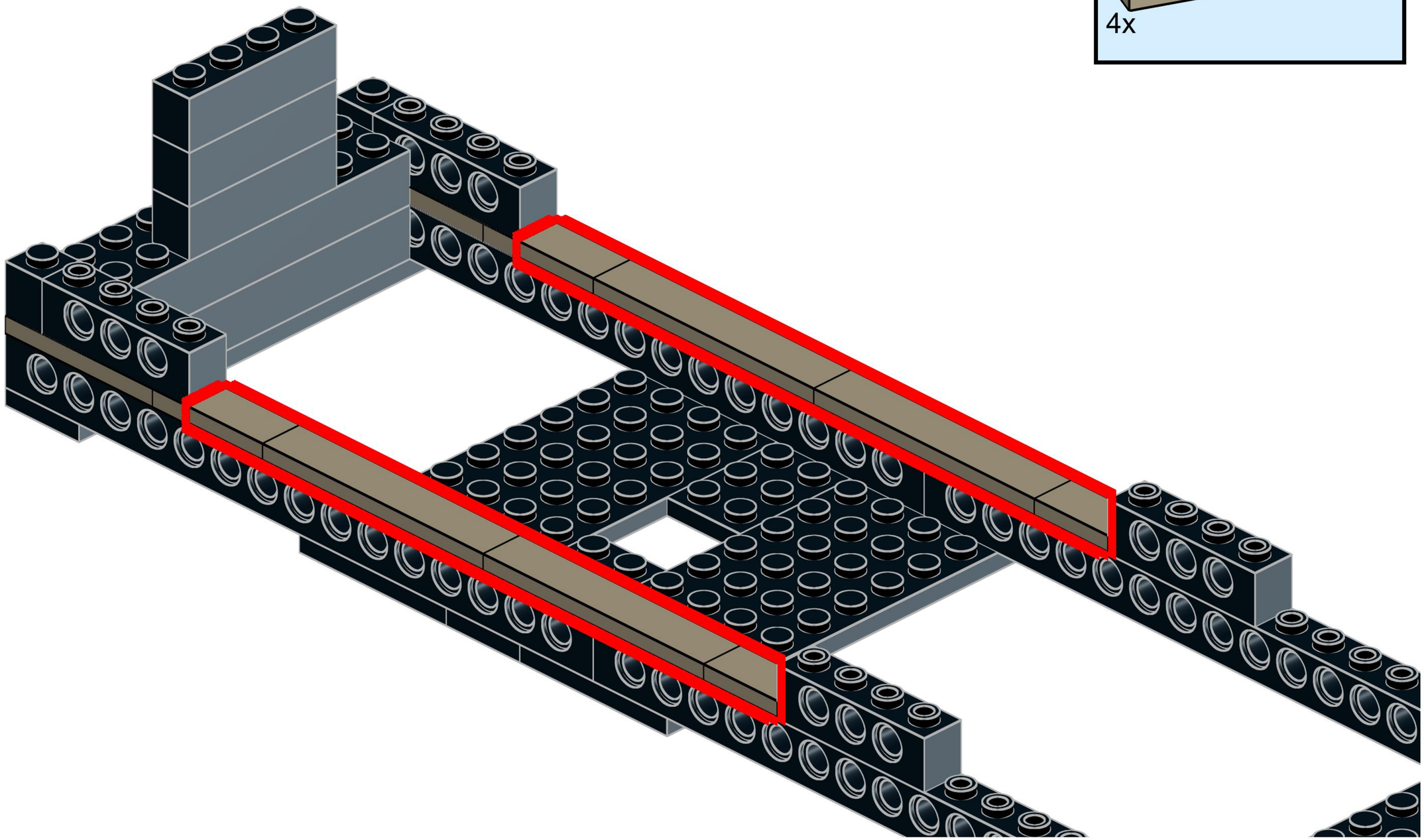

5

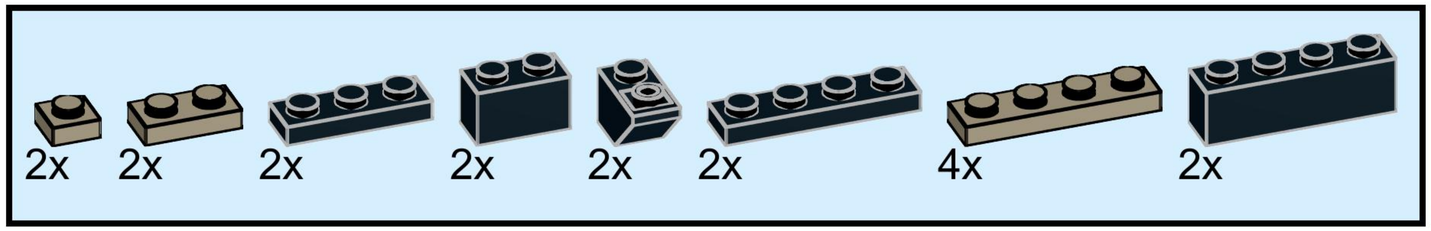

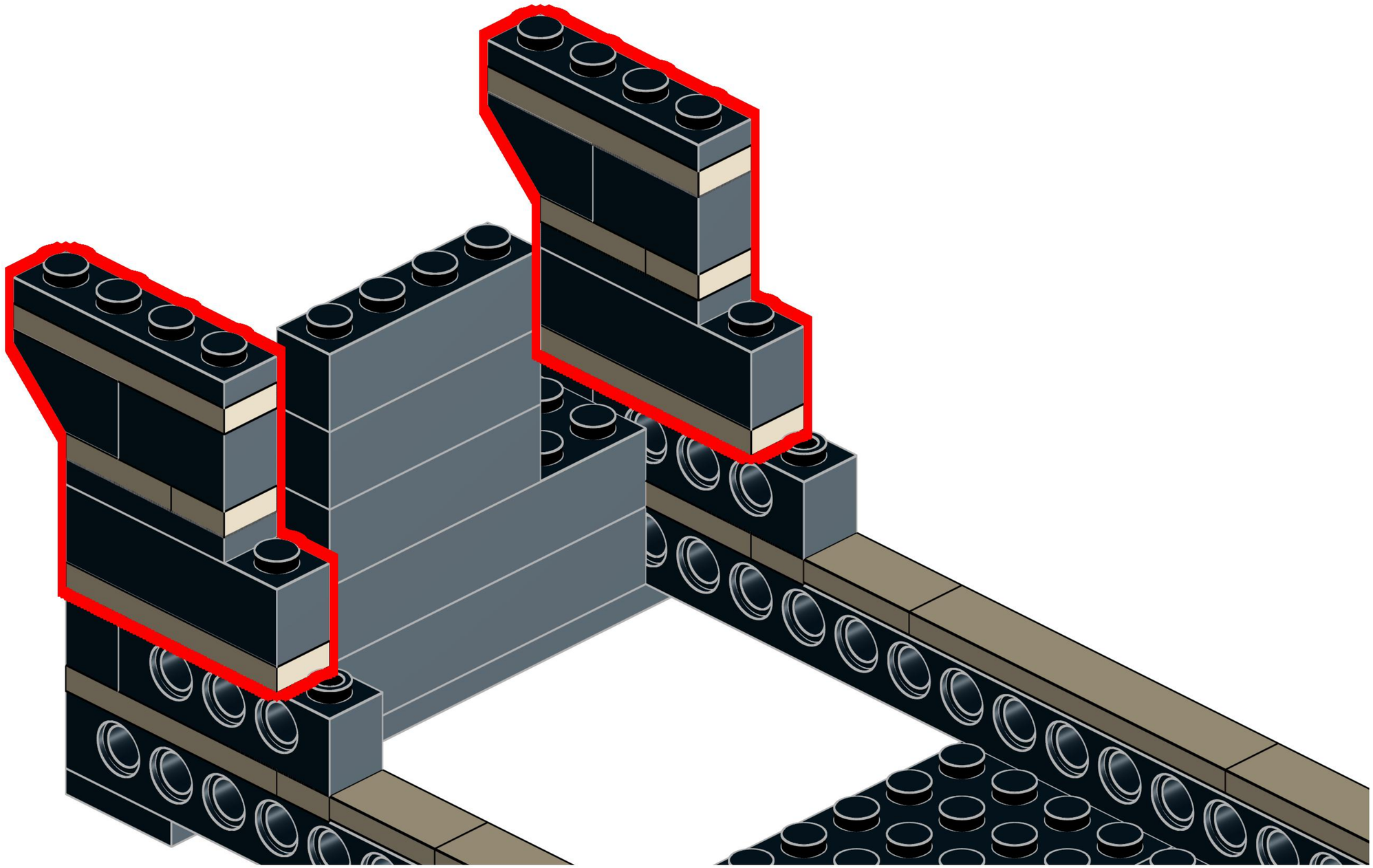

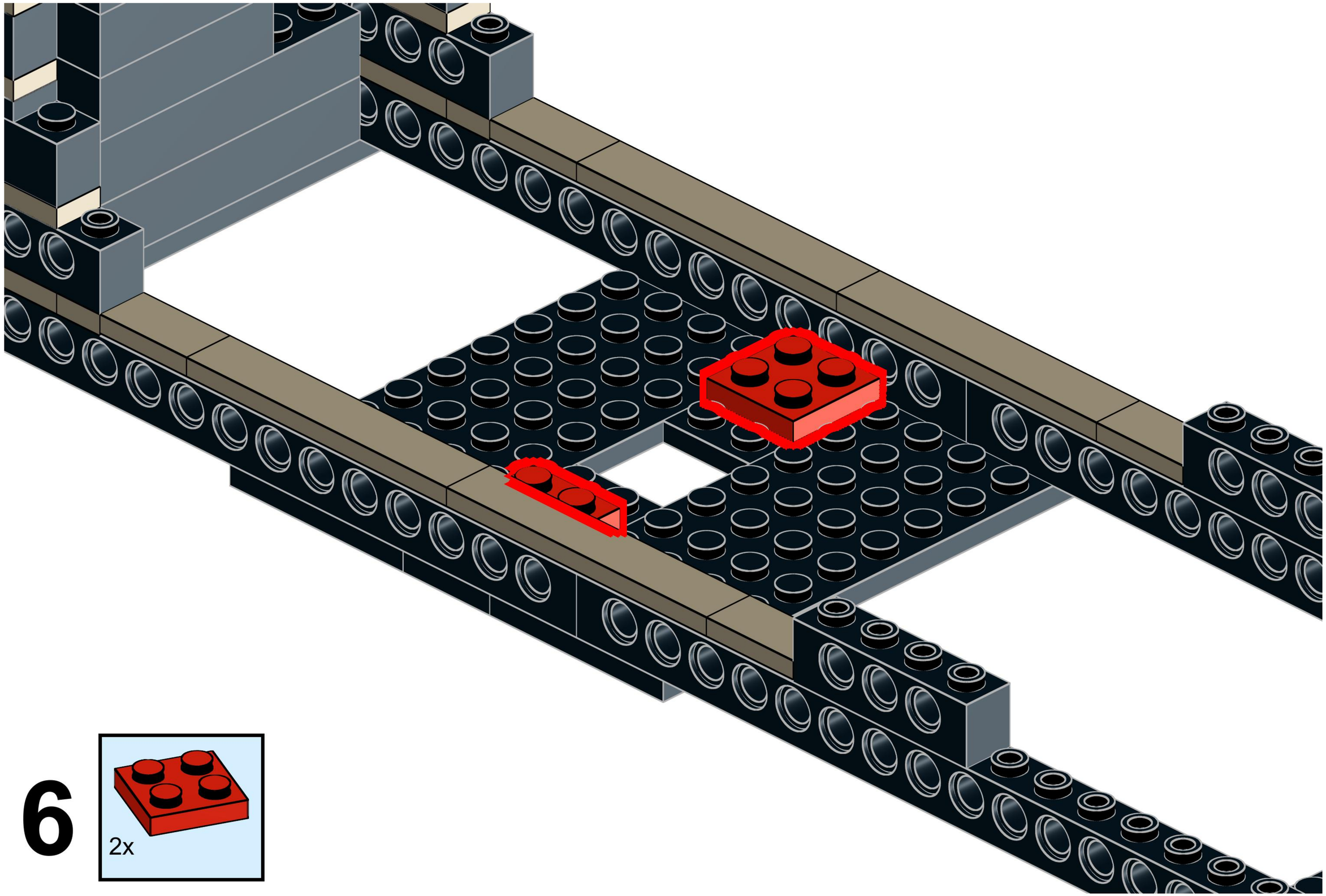

6

7

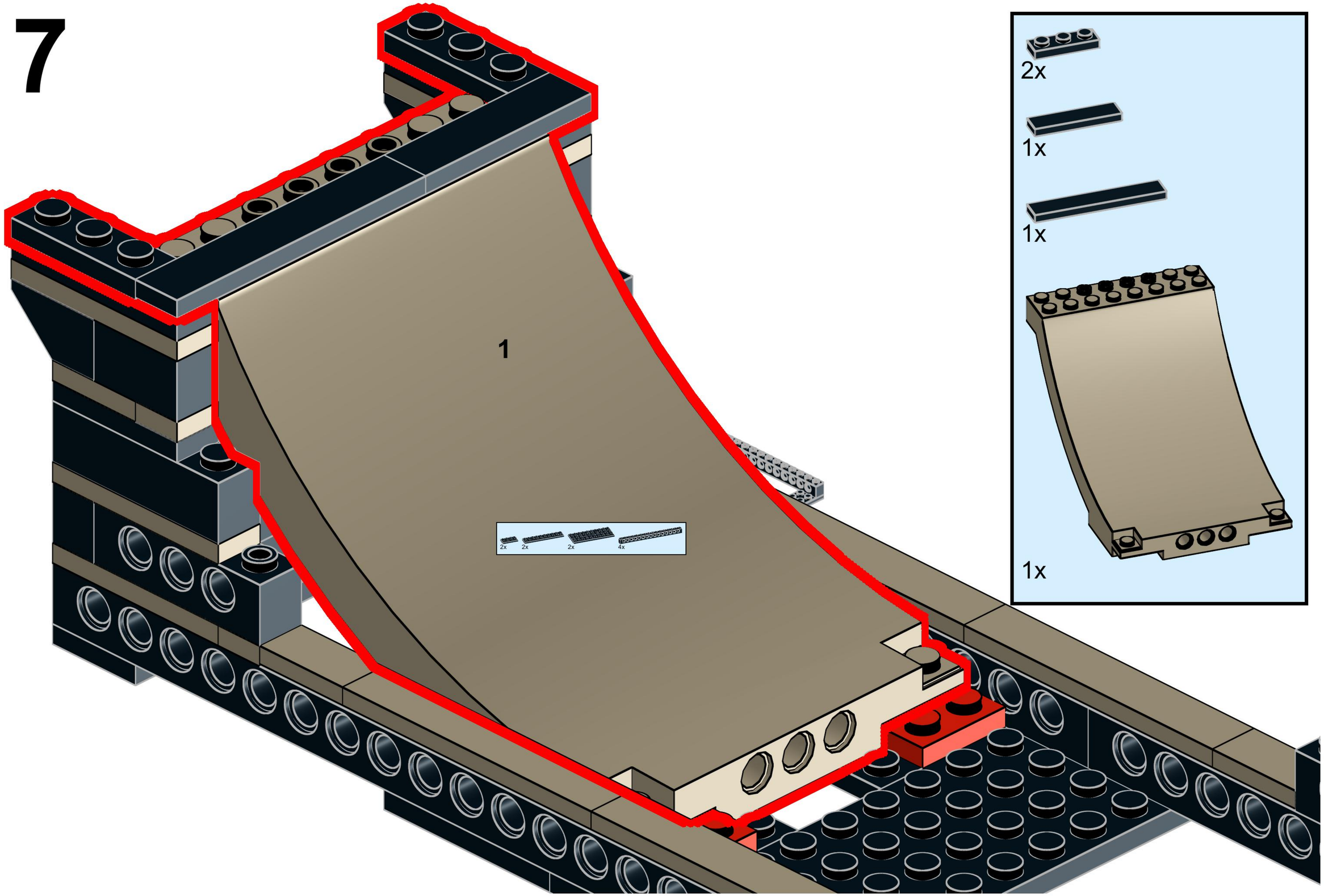

8

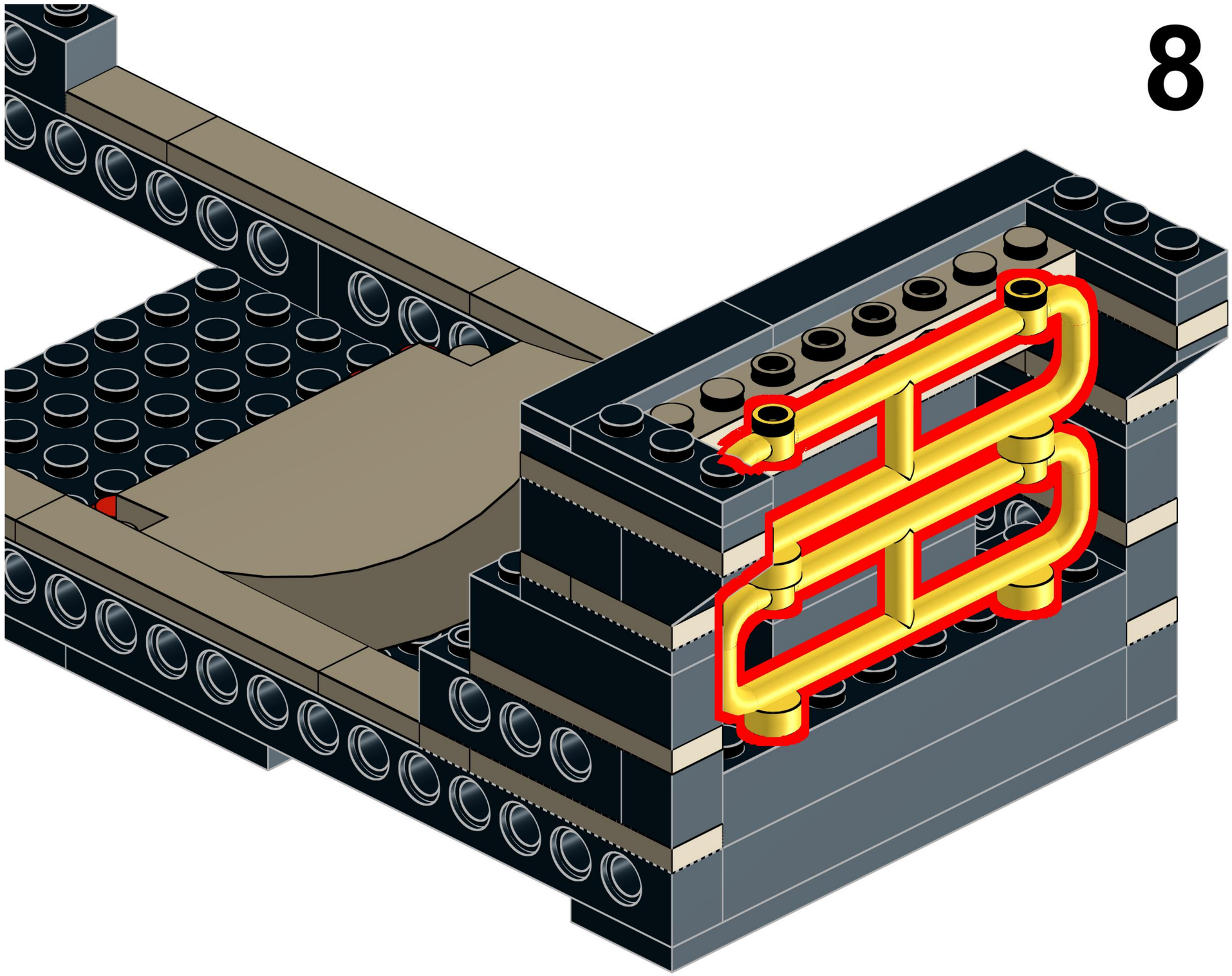

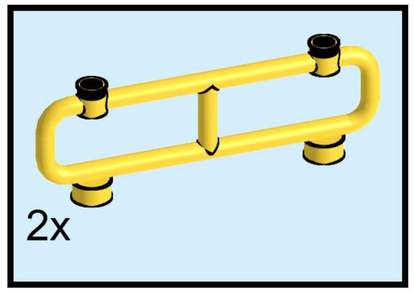

9

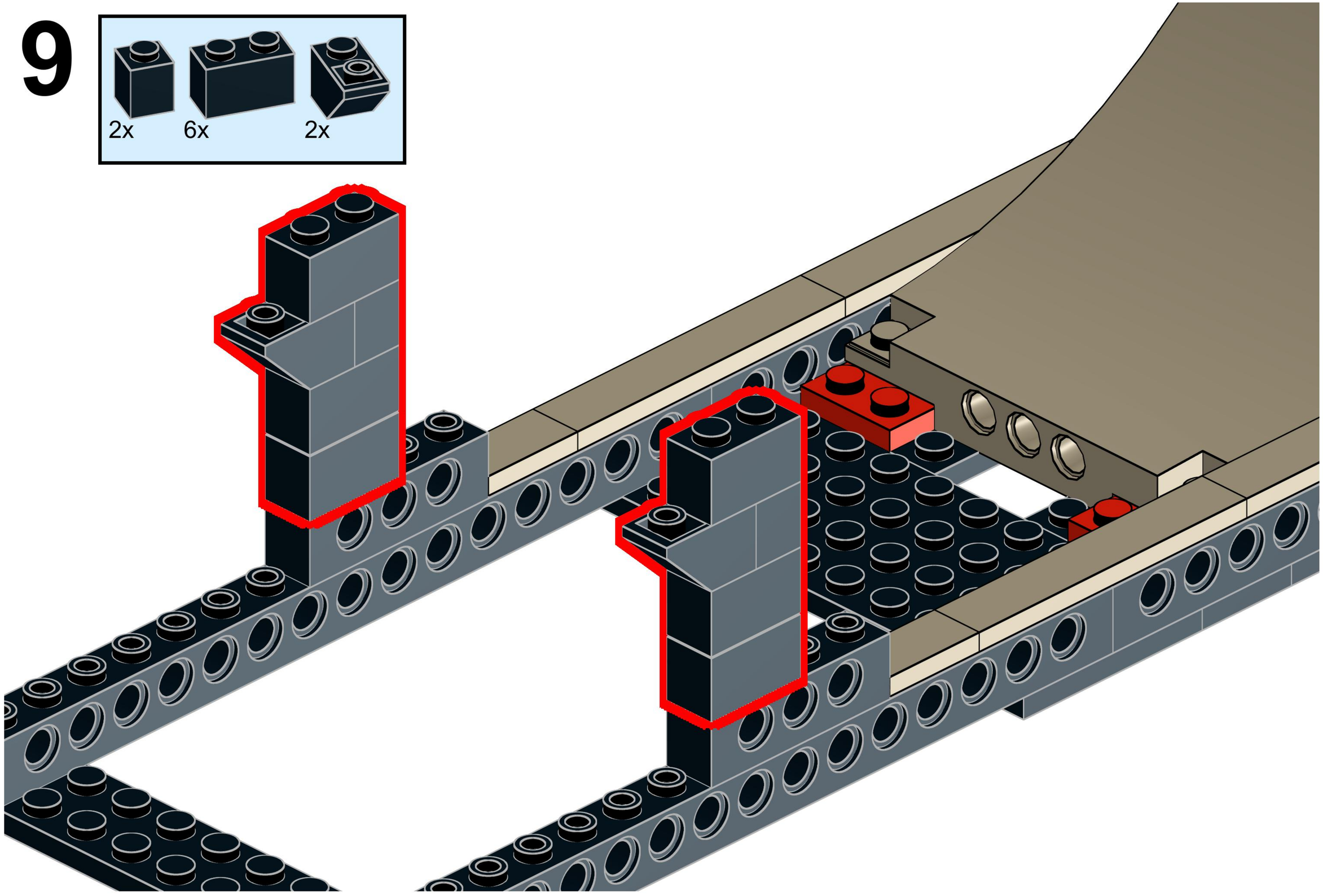

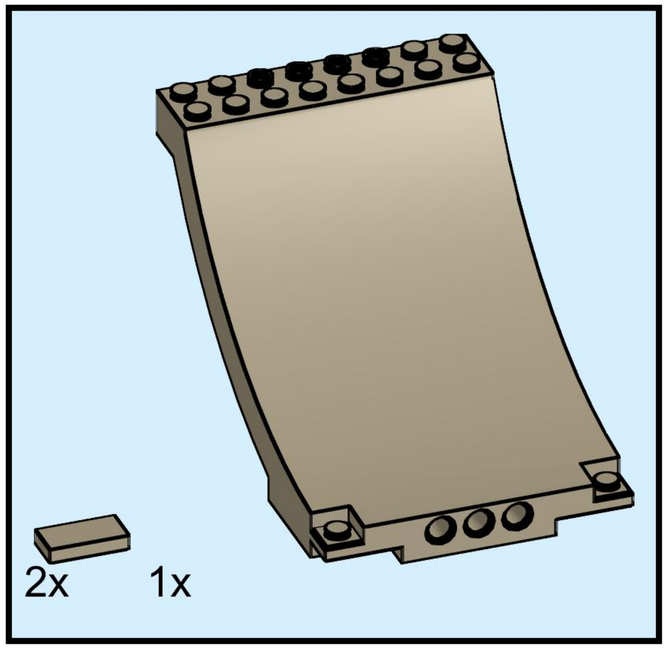

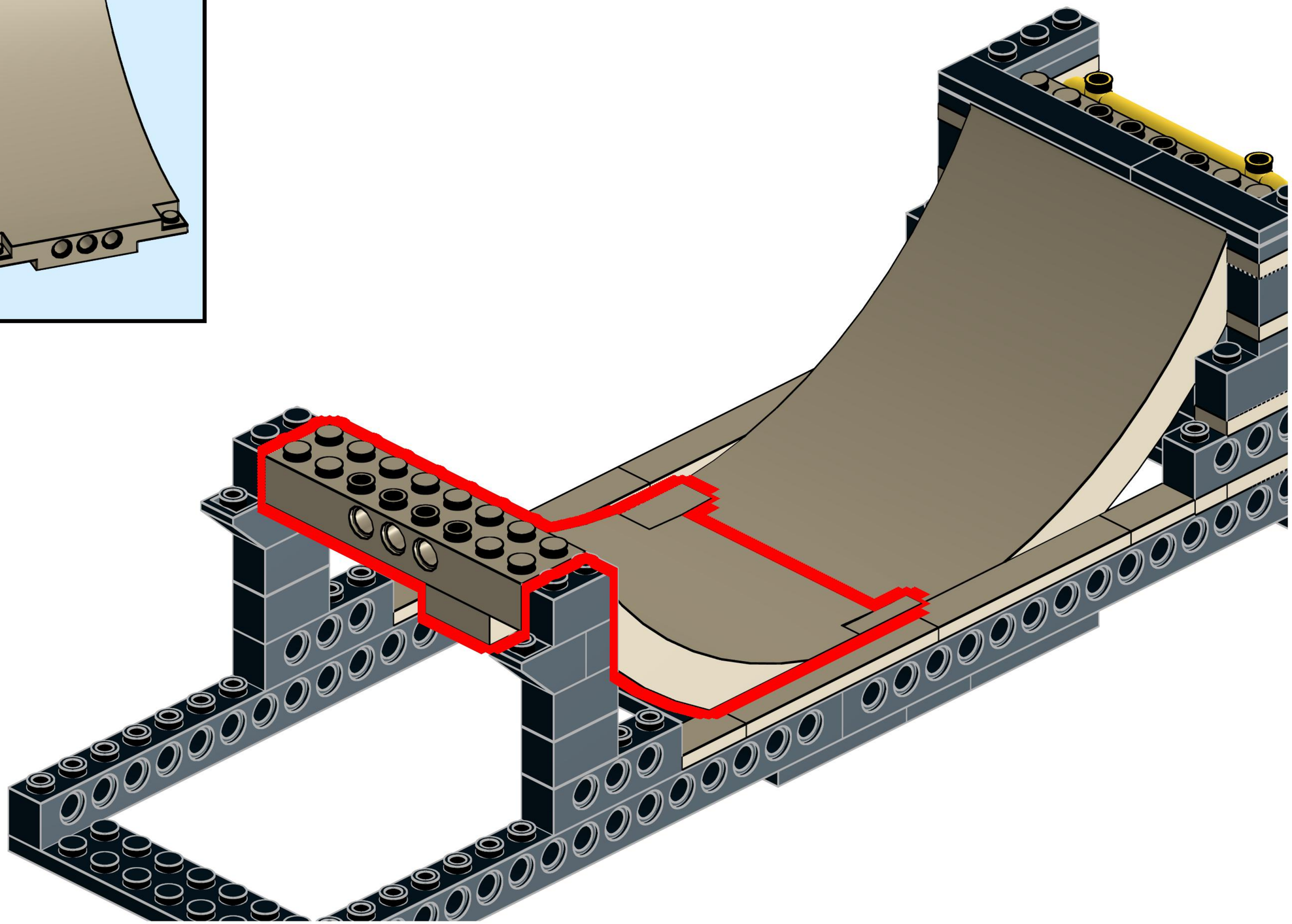

10

11

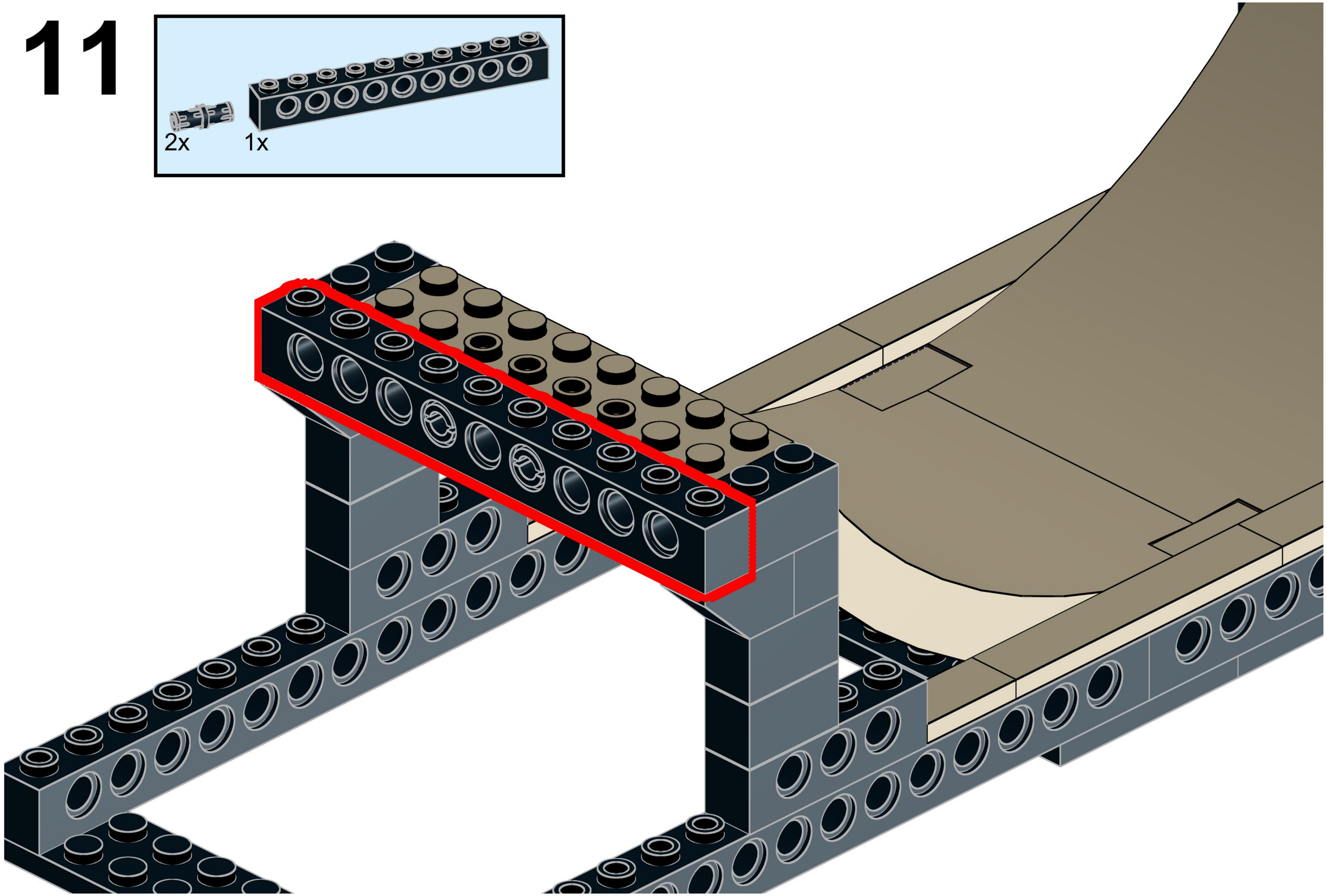

12

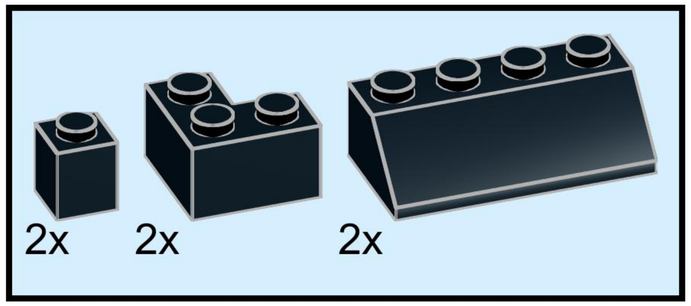

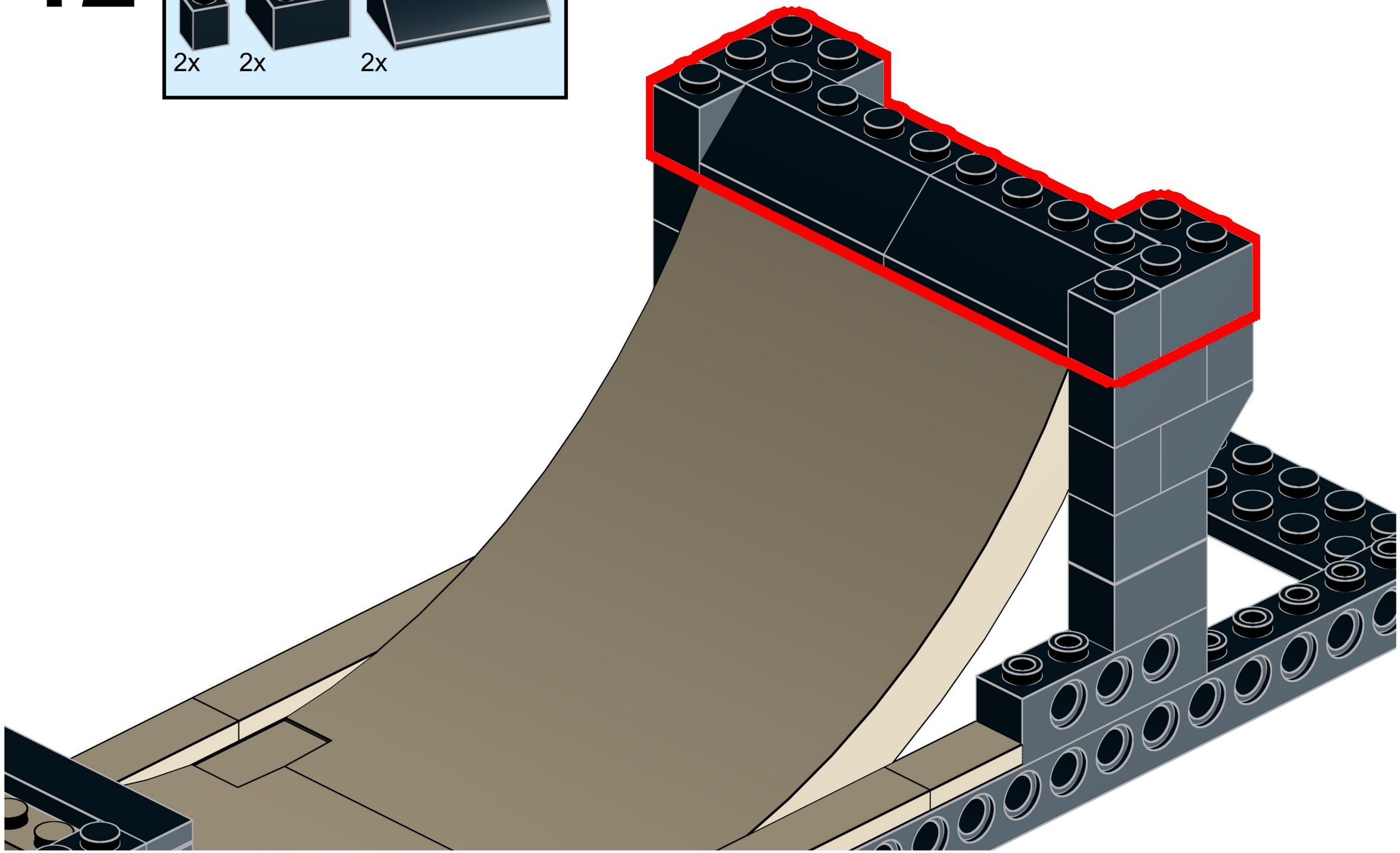

13

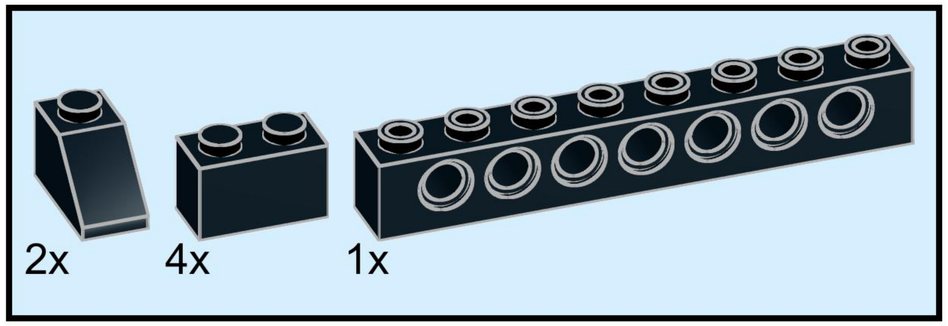

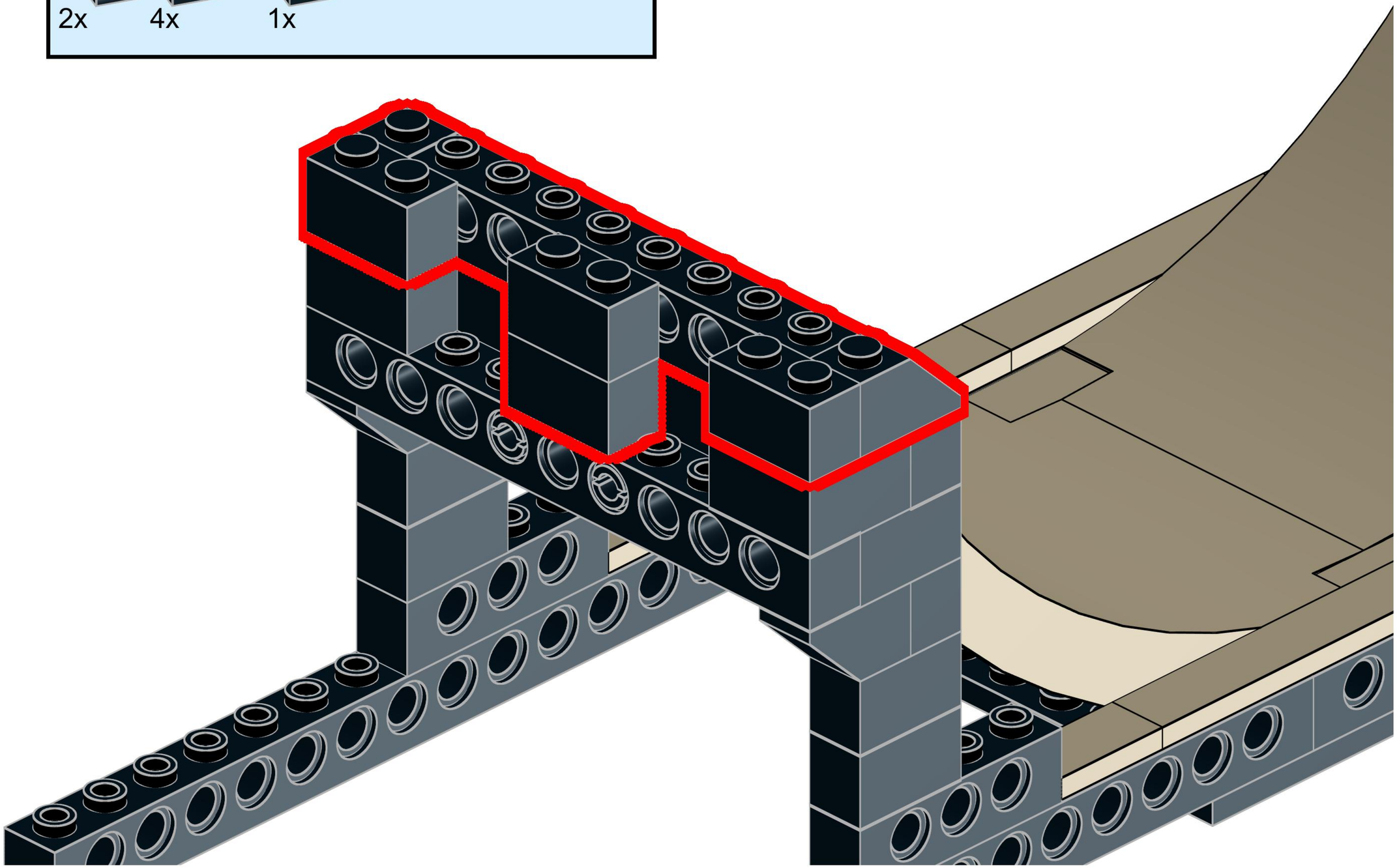

14

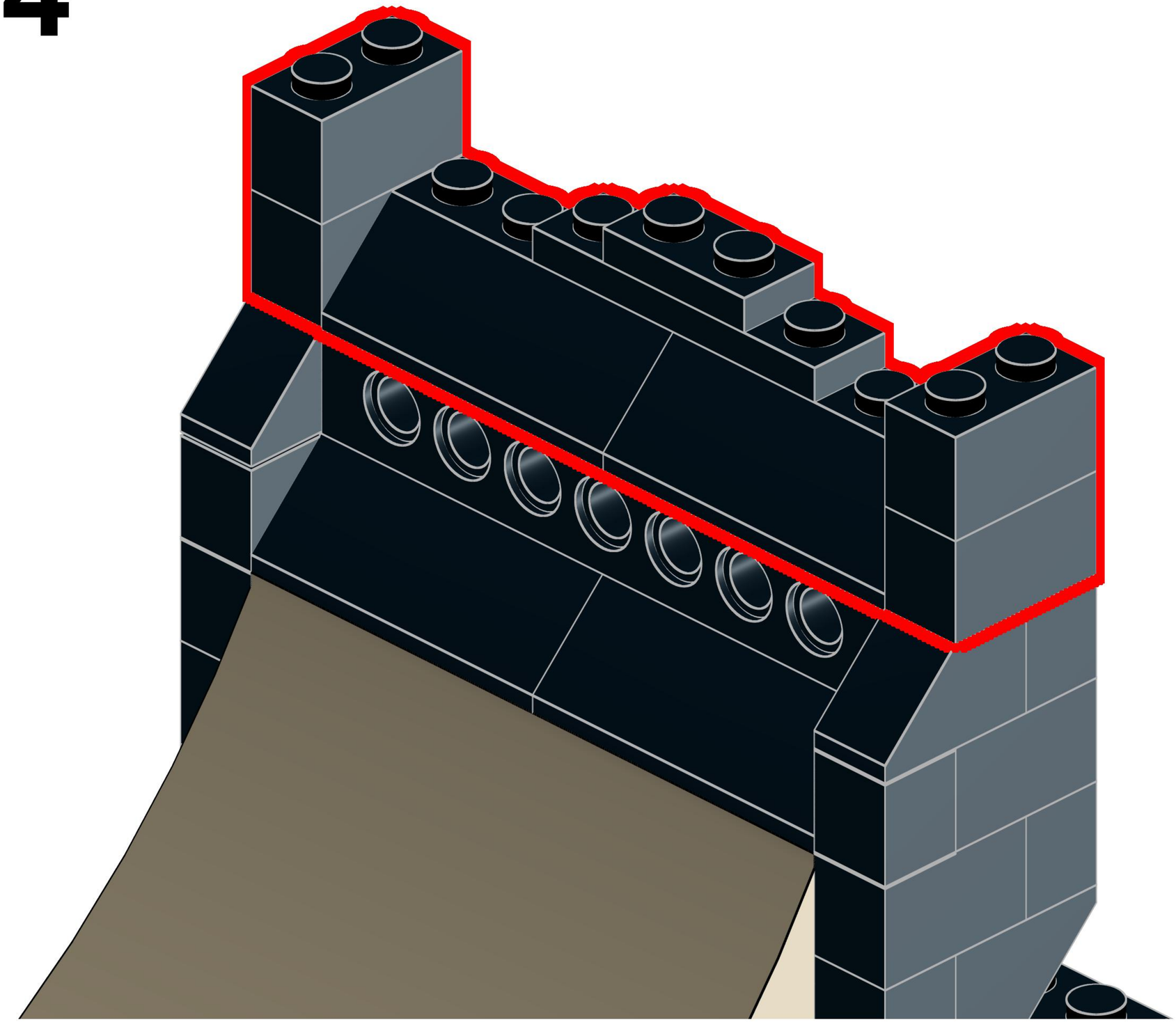

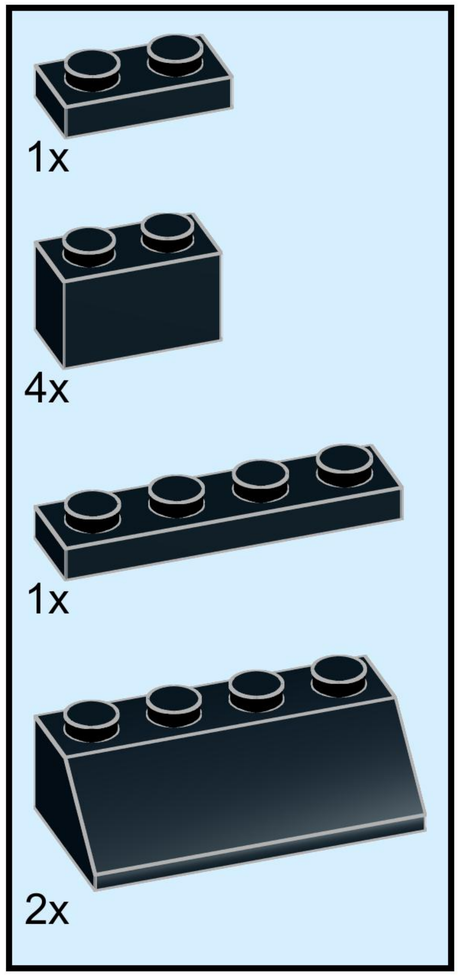

15

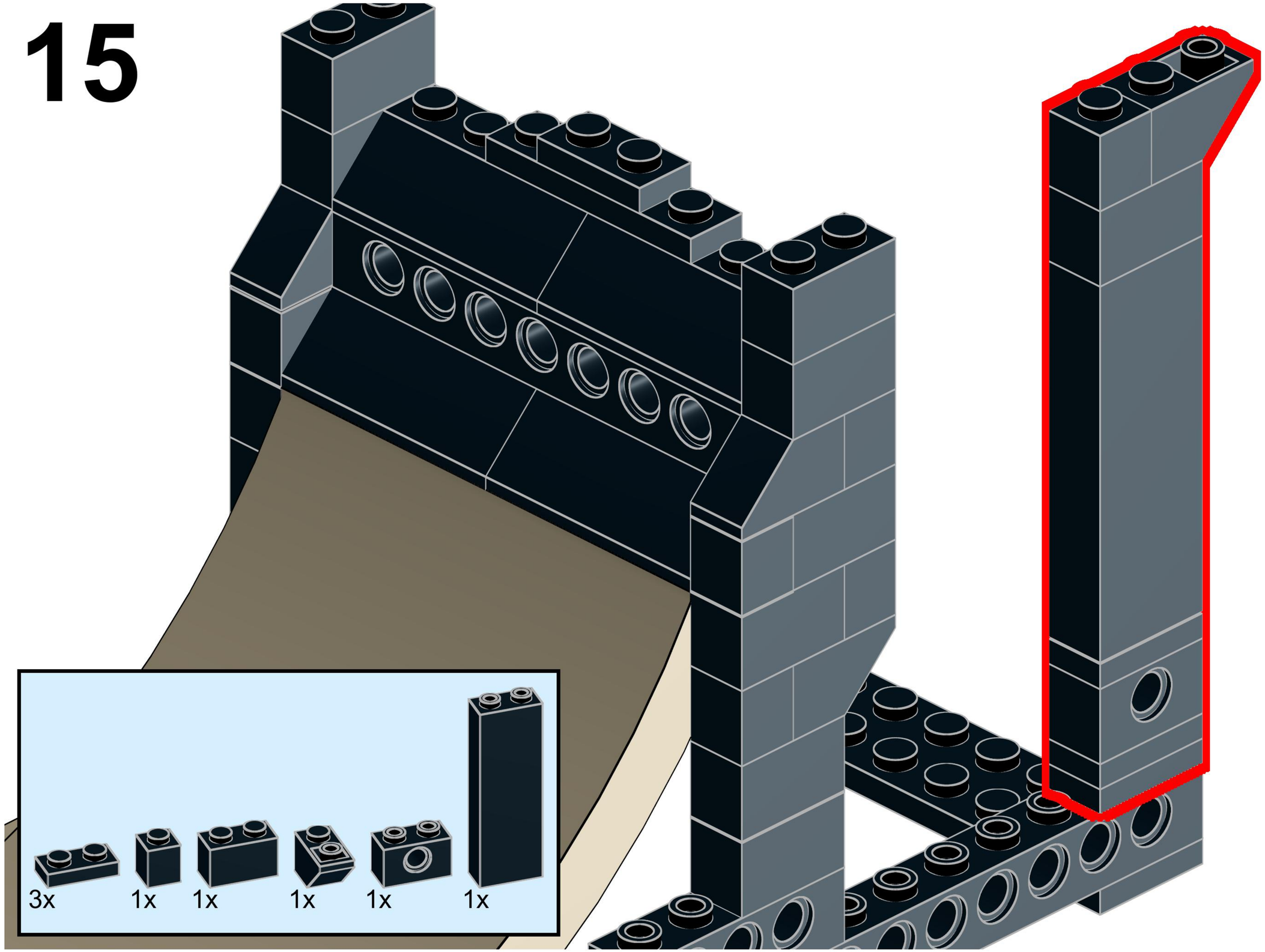

16

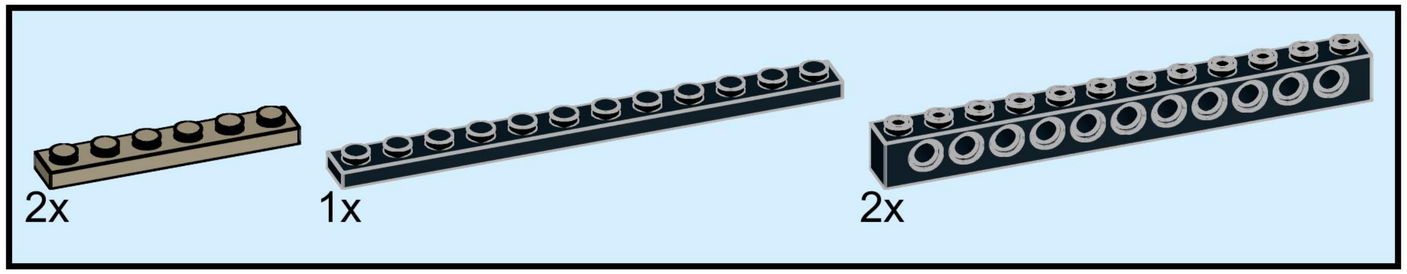

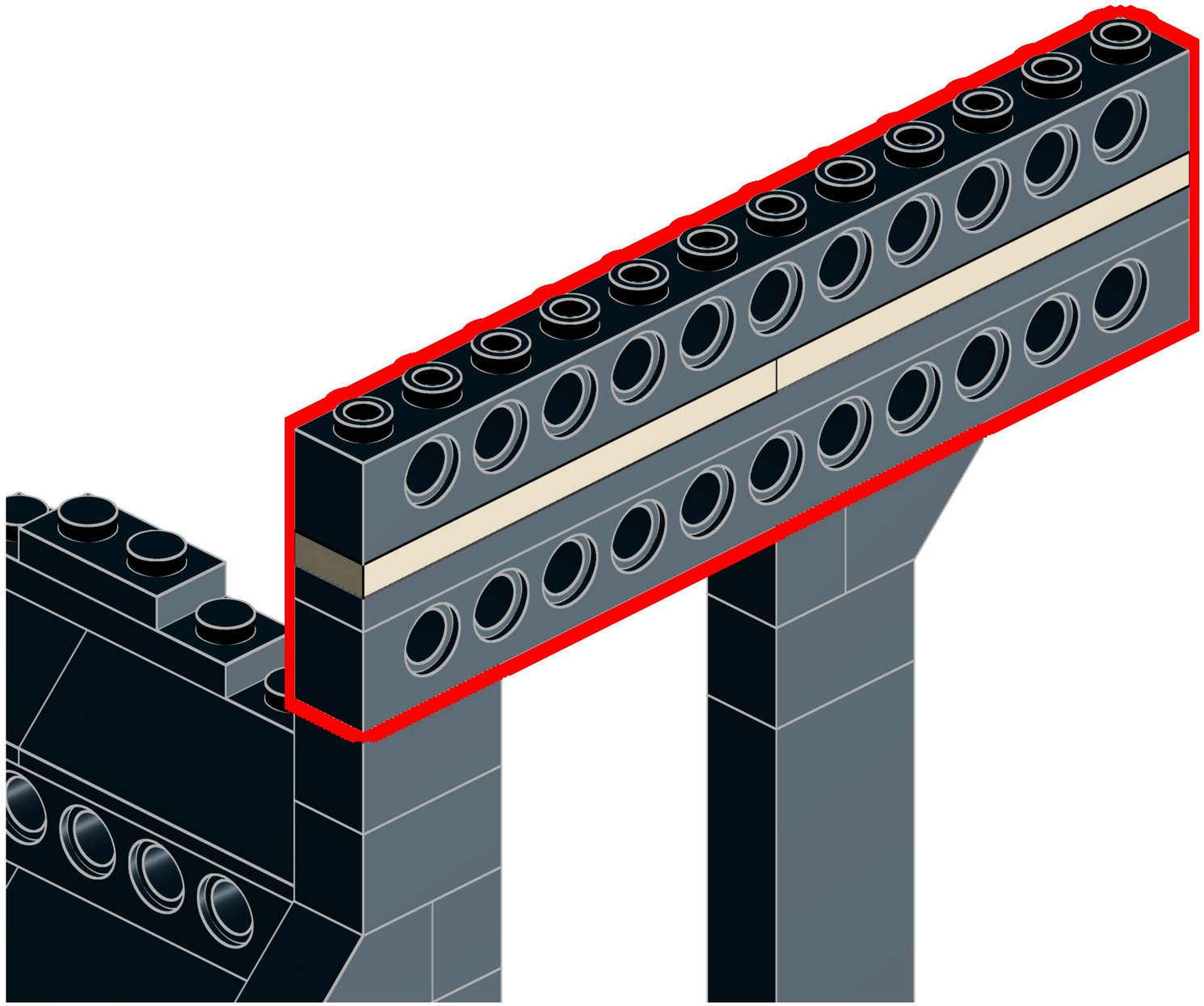

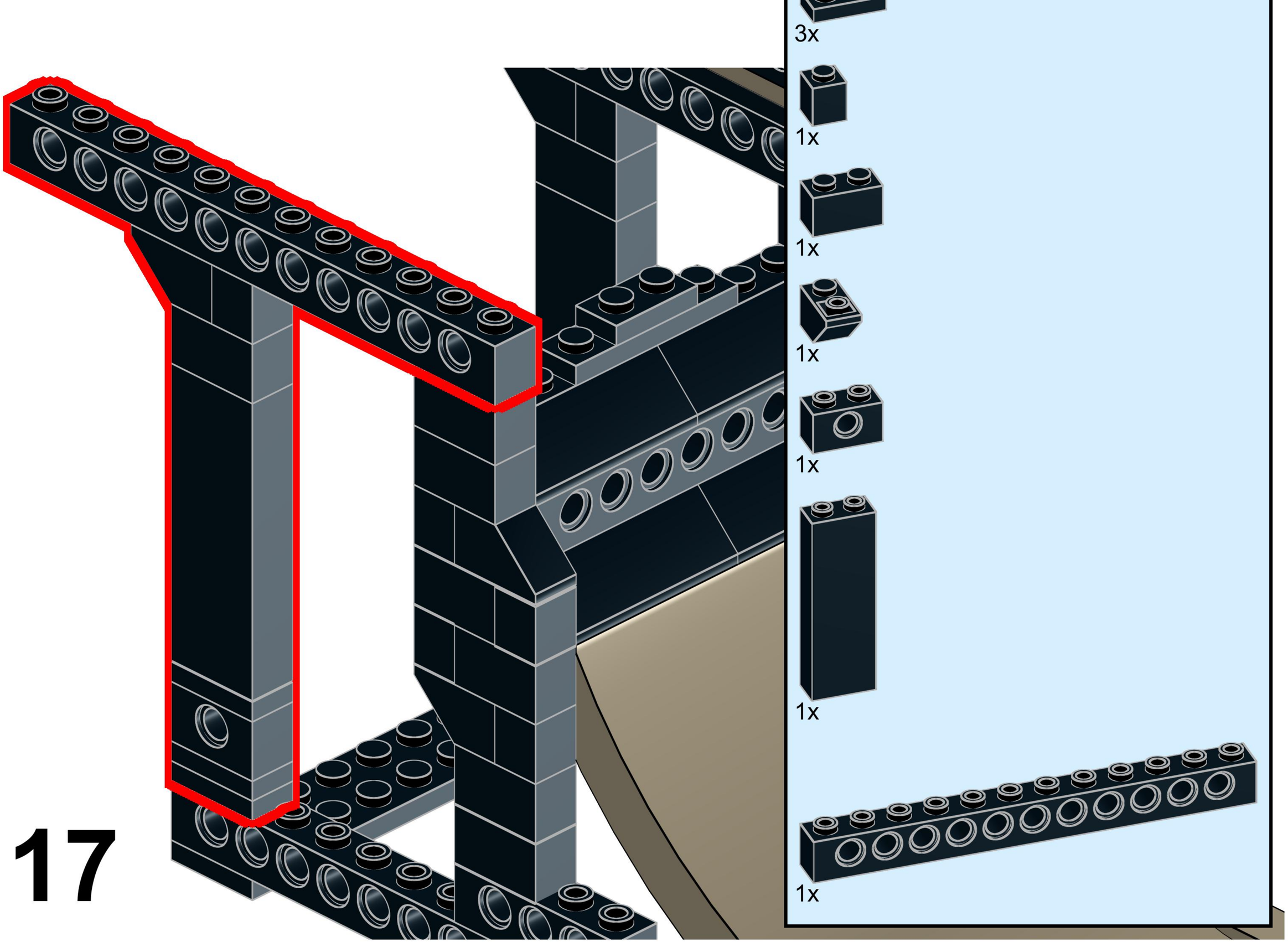
3x
1x
1x
1x
1x
1x
1x

18

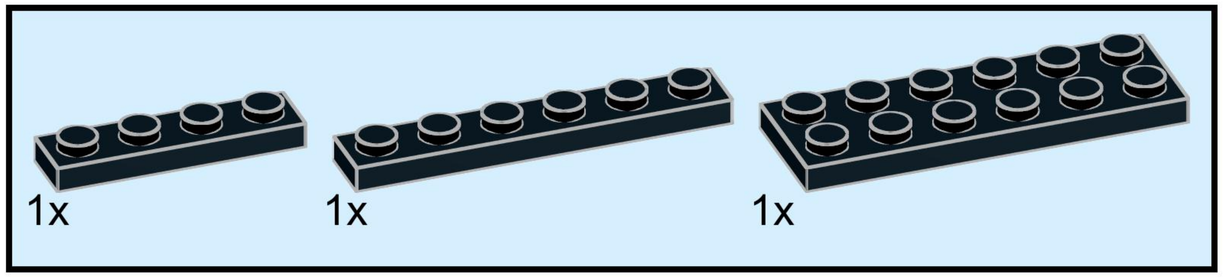

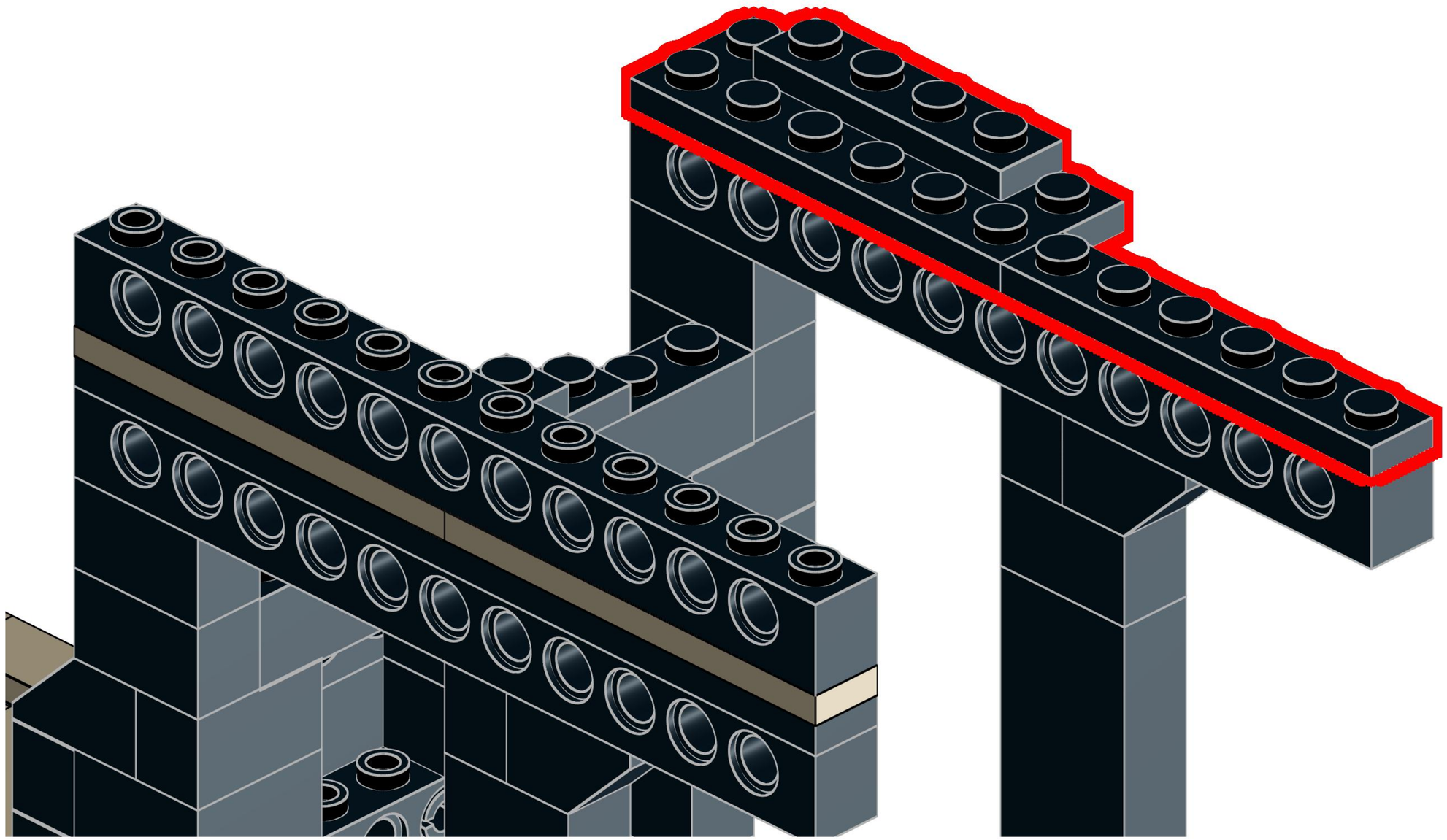

19

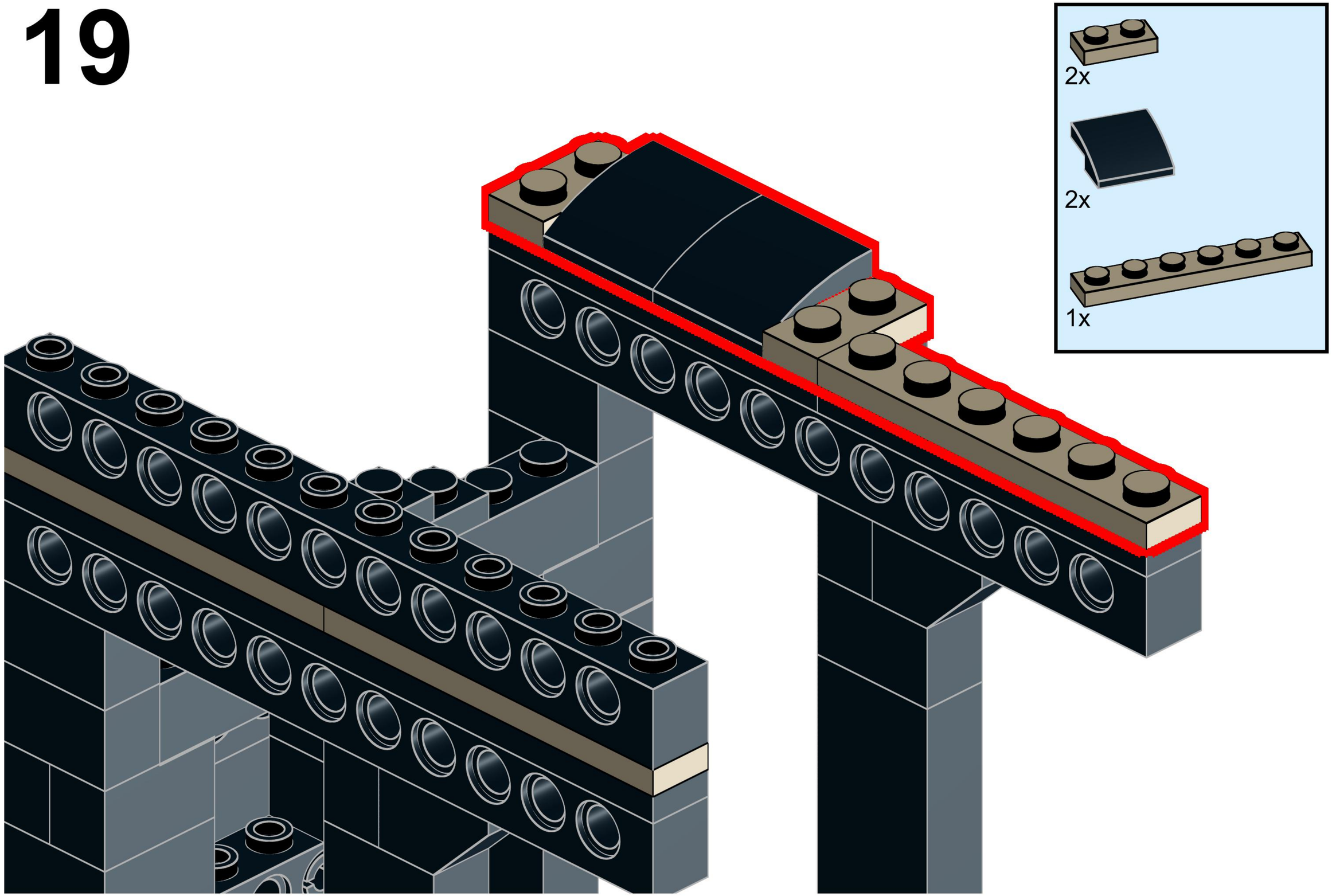

20

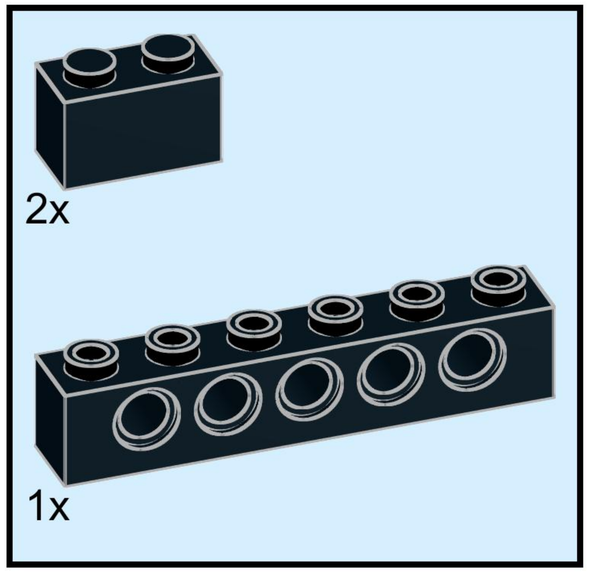

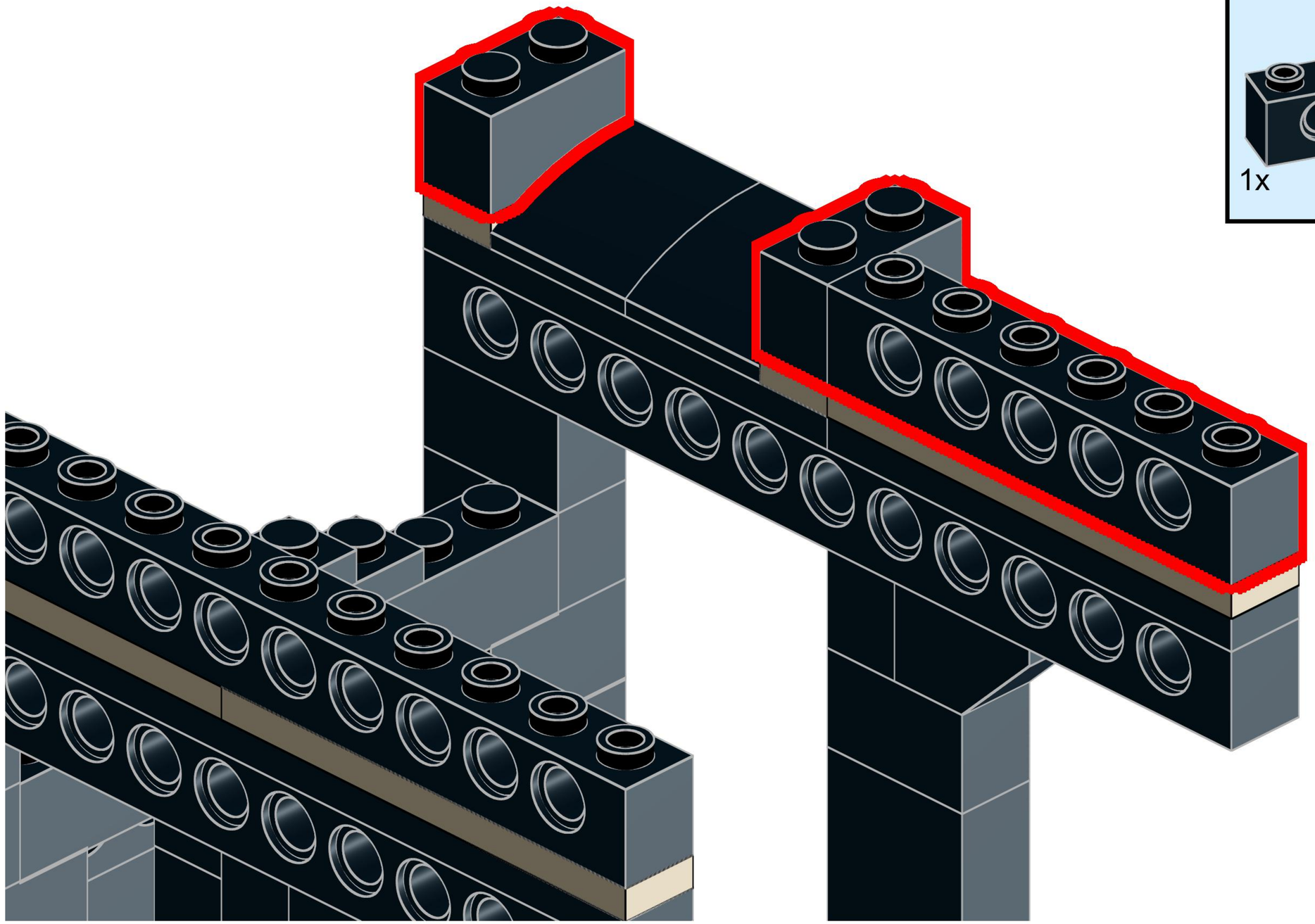

21

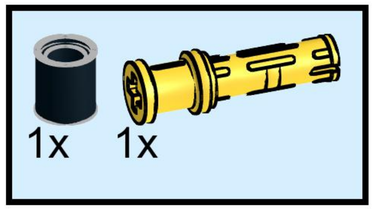

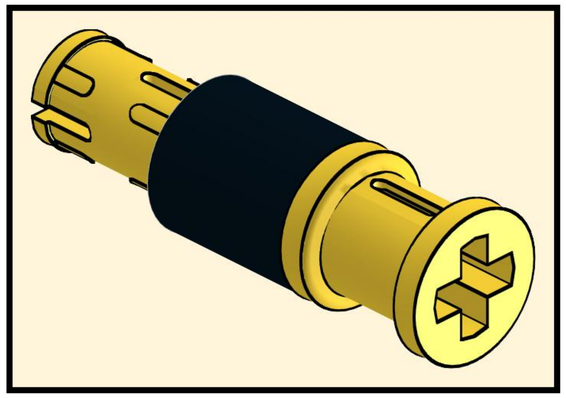

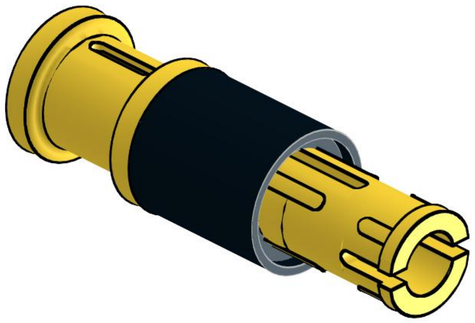

22

Remove this pin to run in stand-alone configuration.

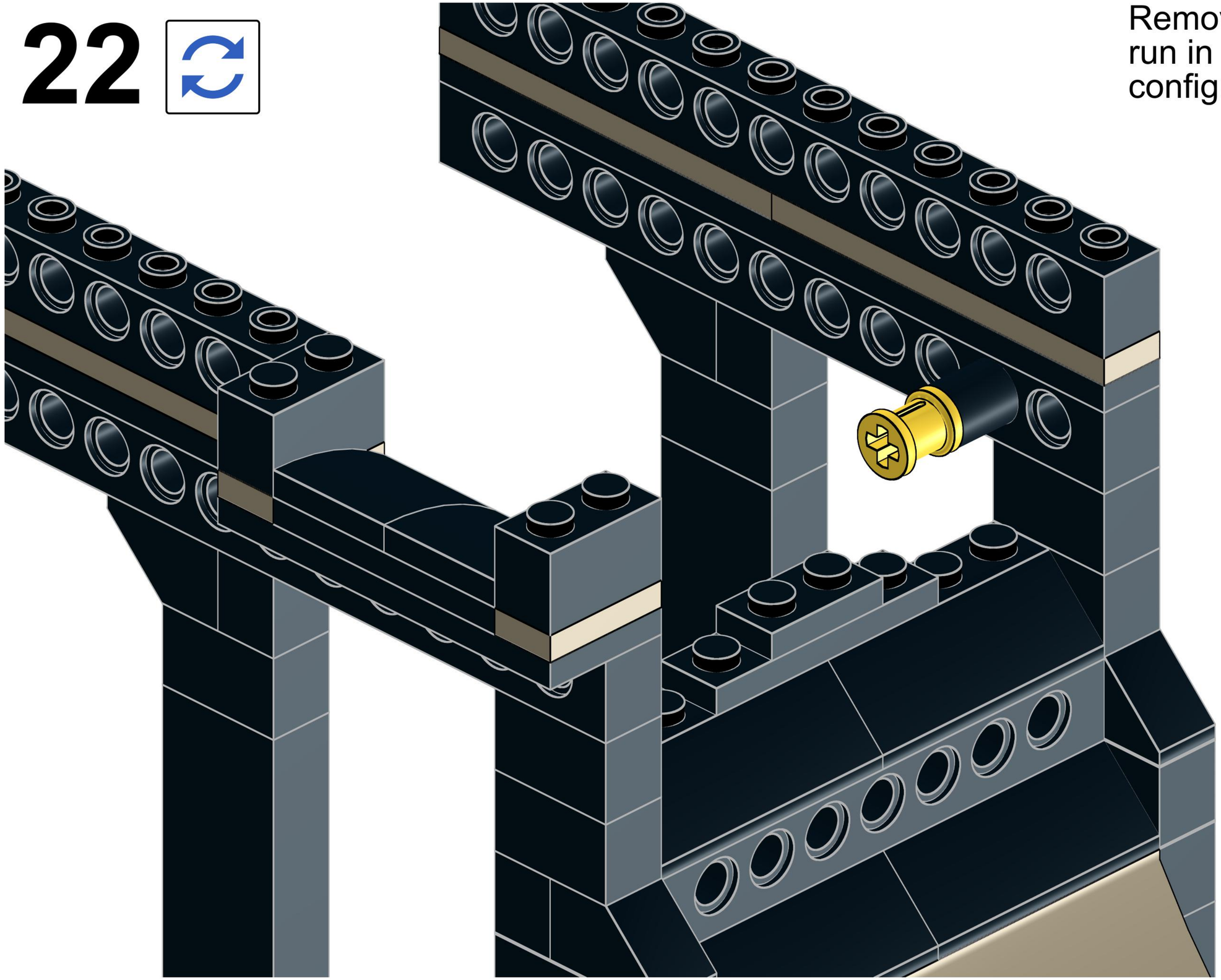

23

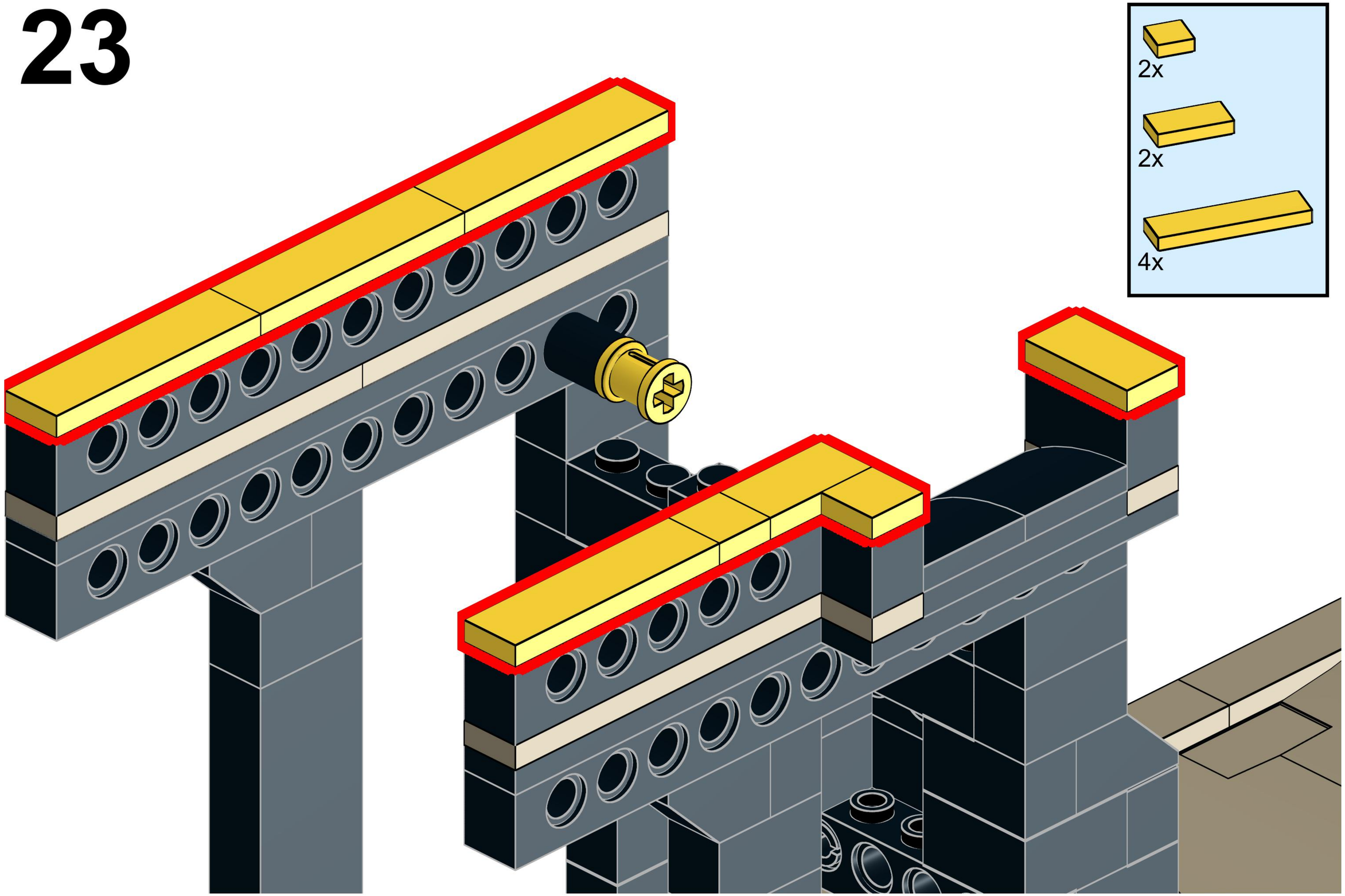

24

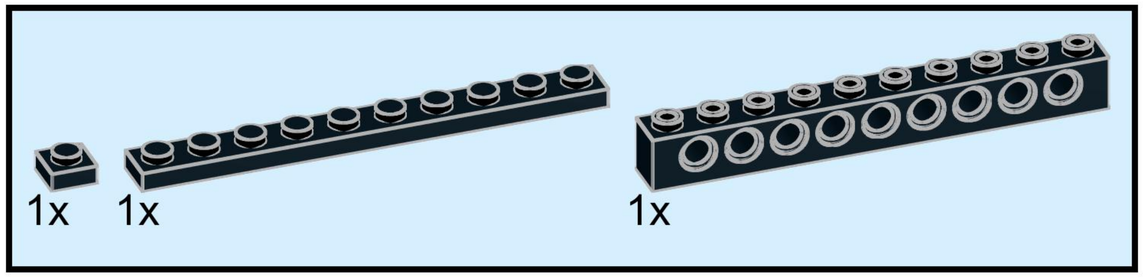

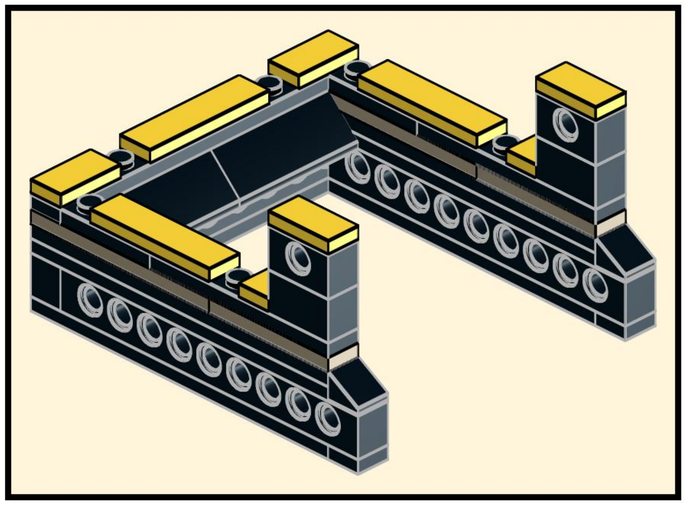

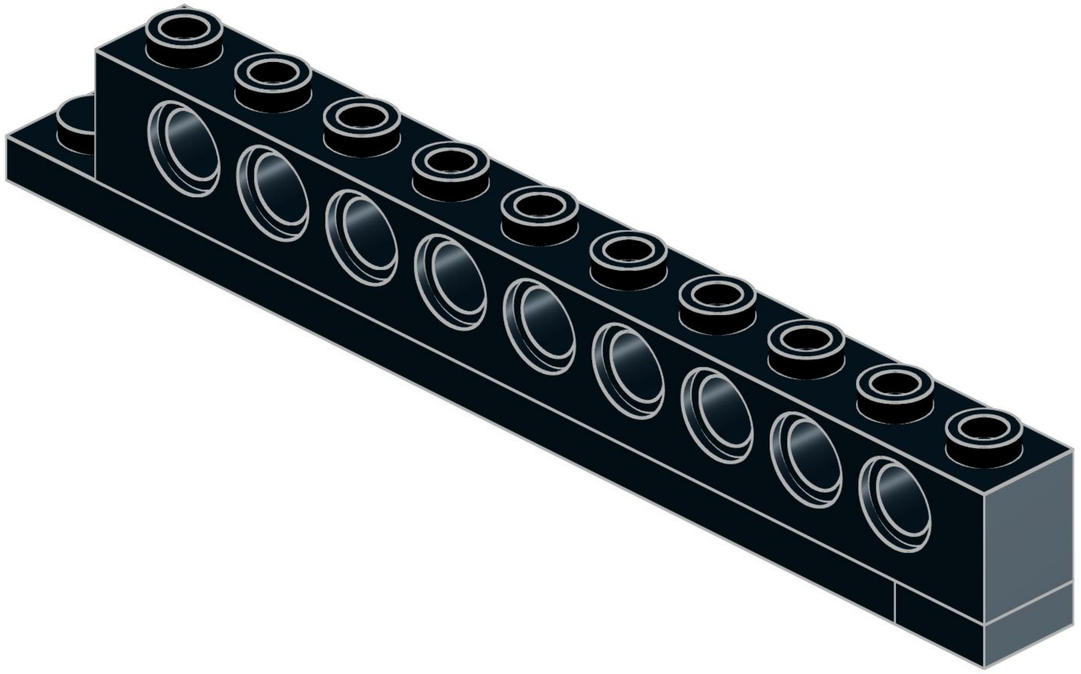

25

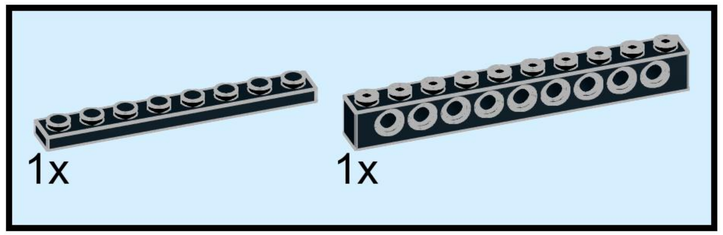

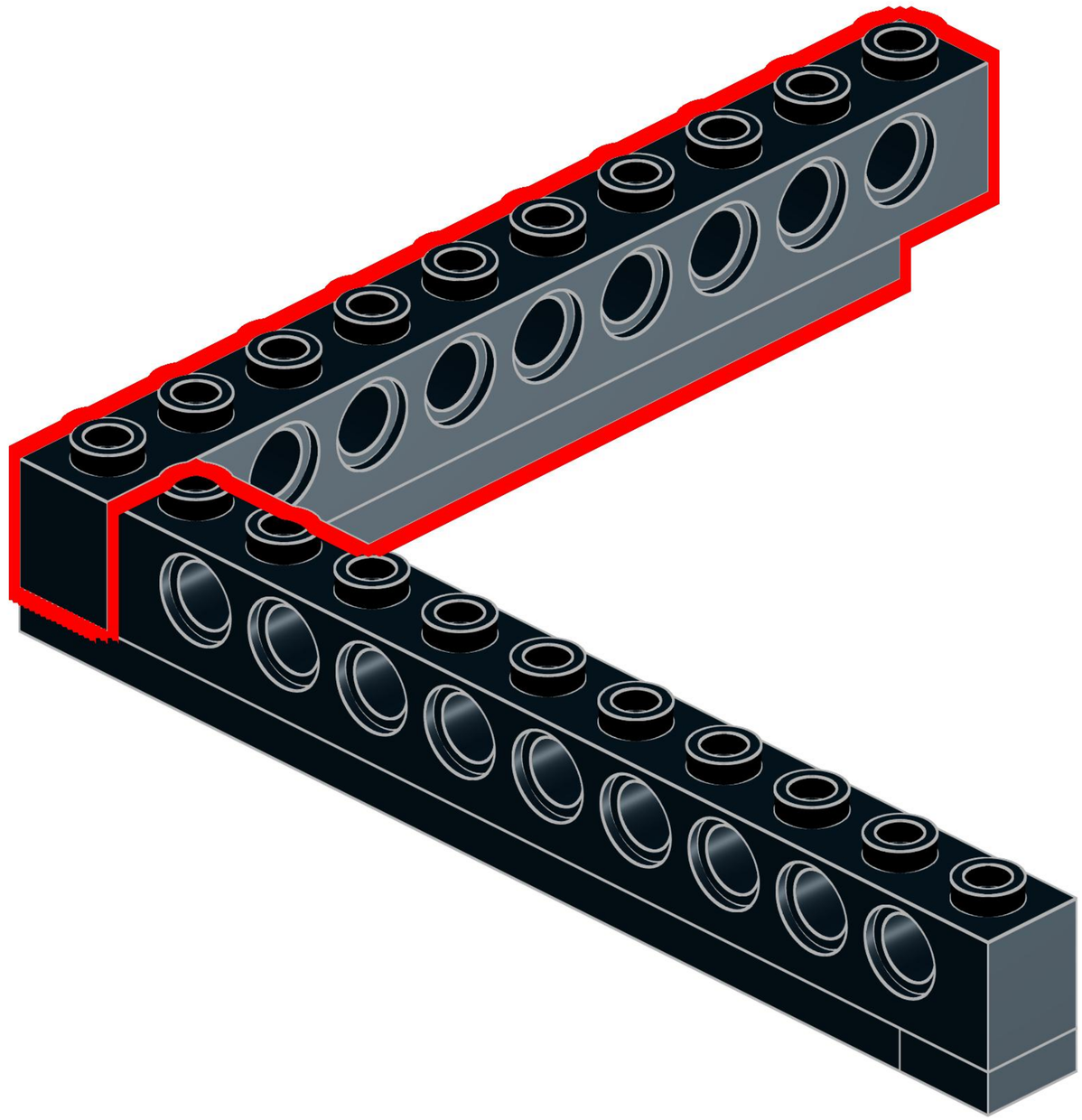

26

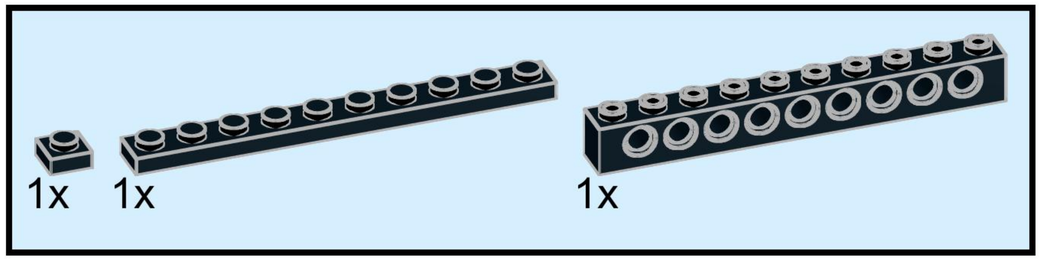

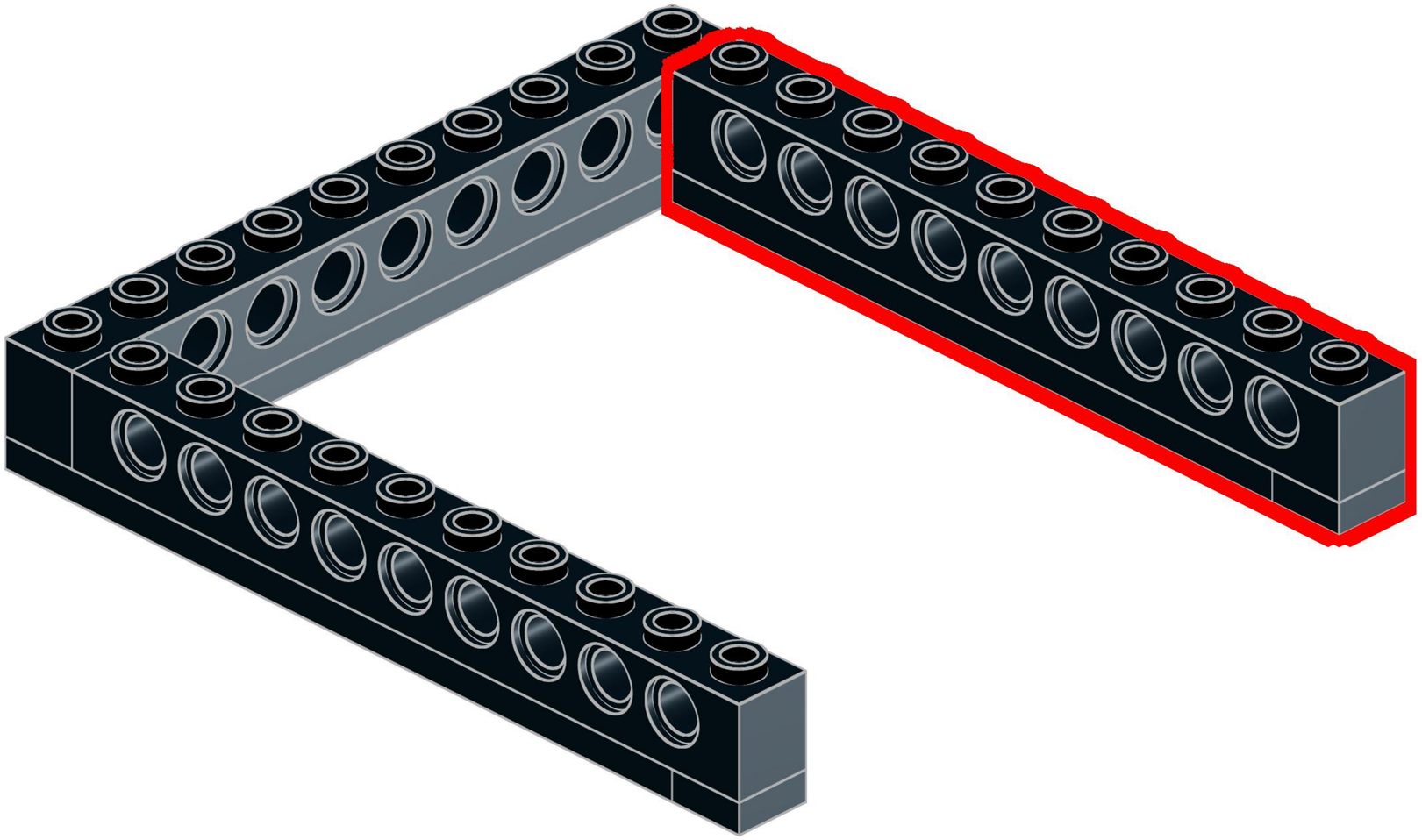

27

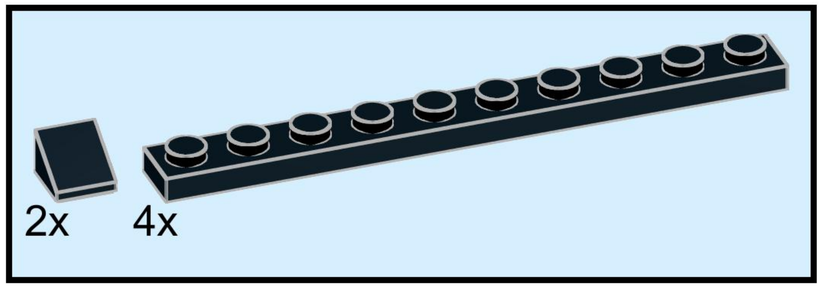

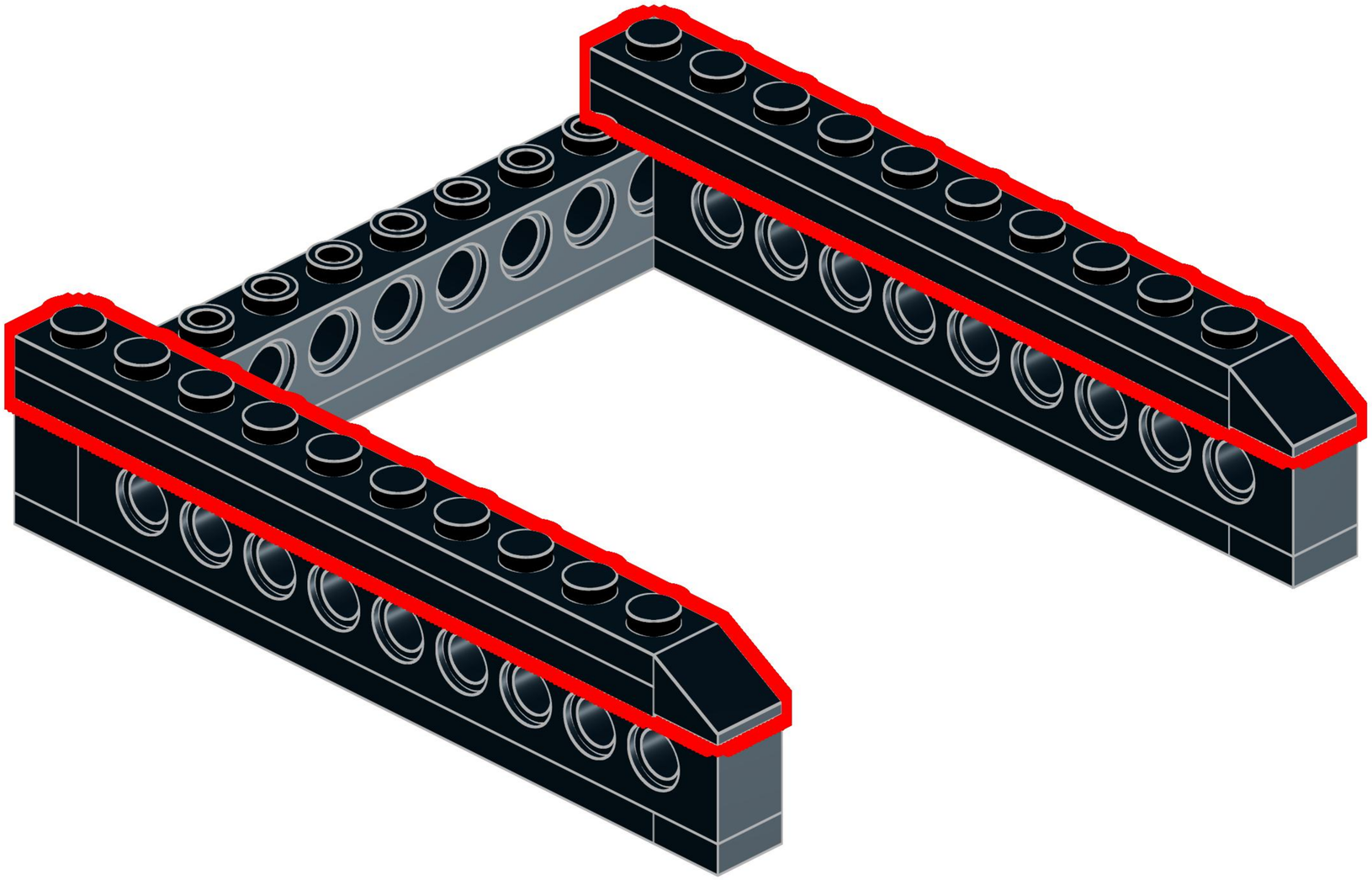

28

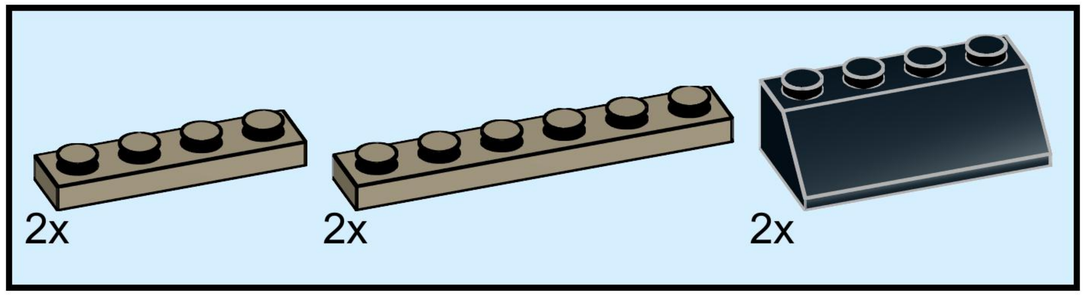

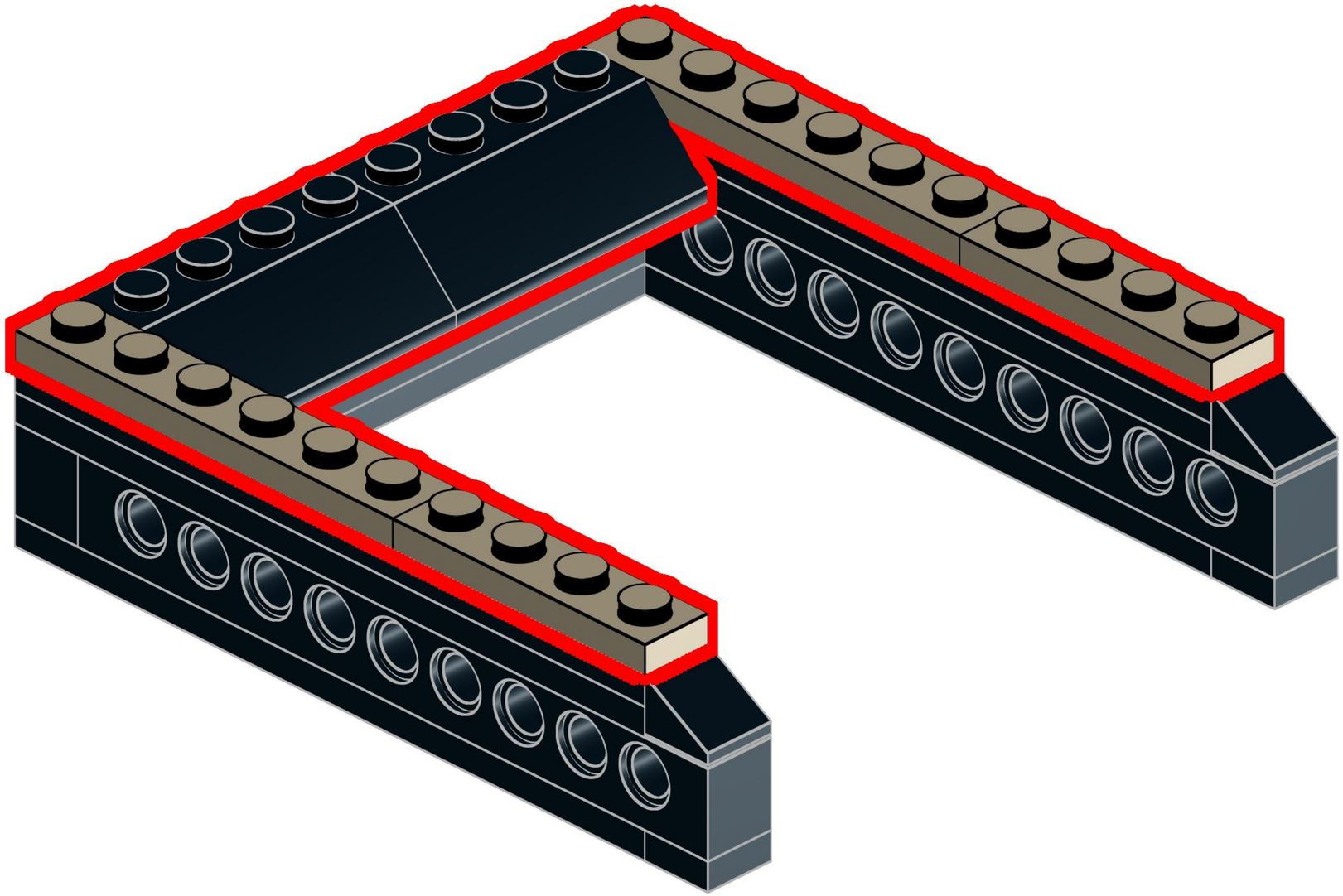

29

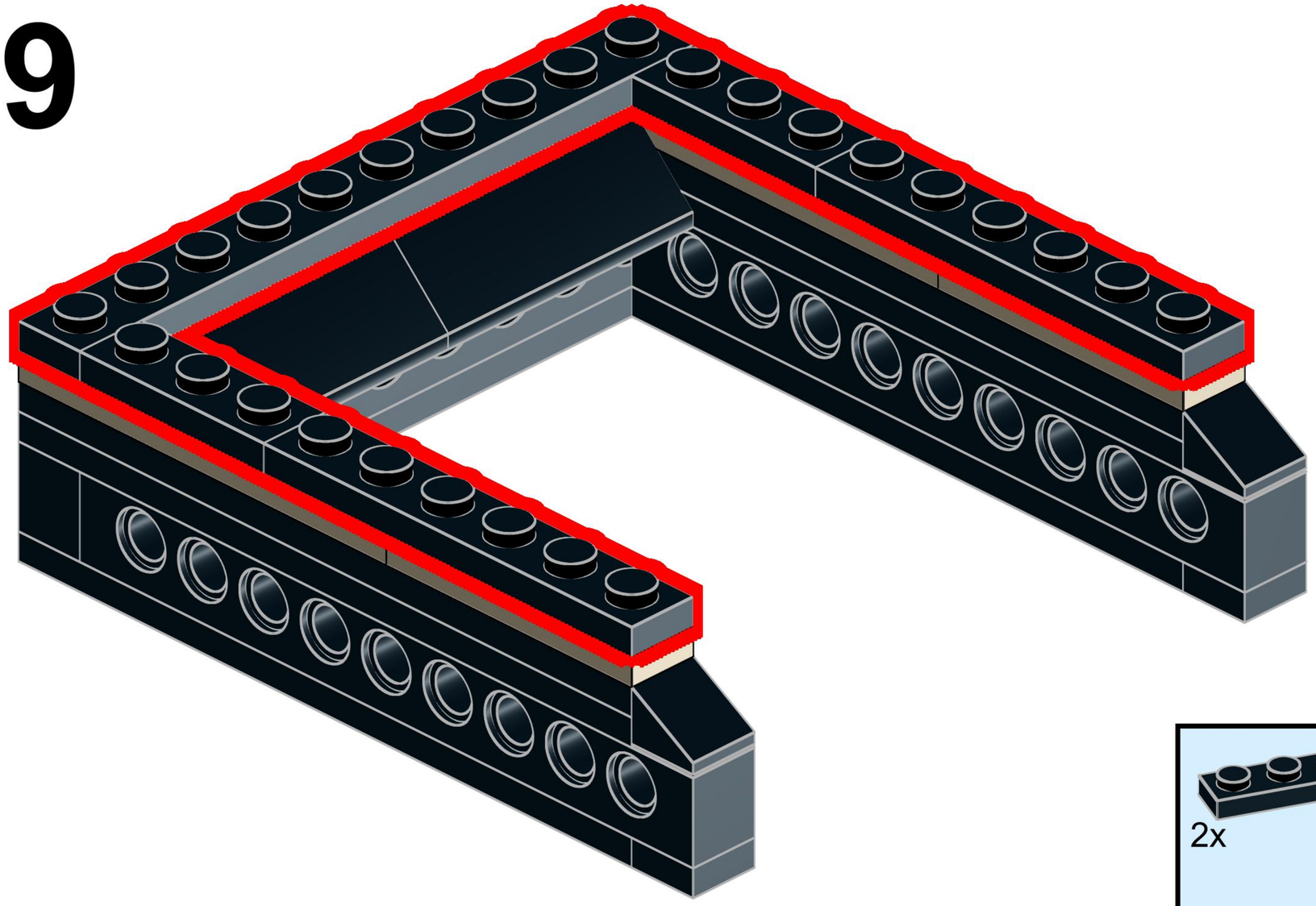

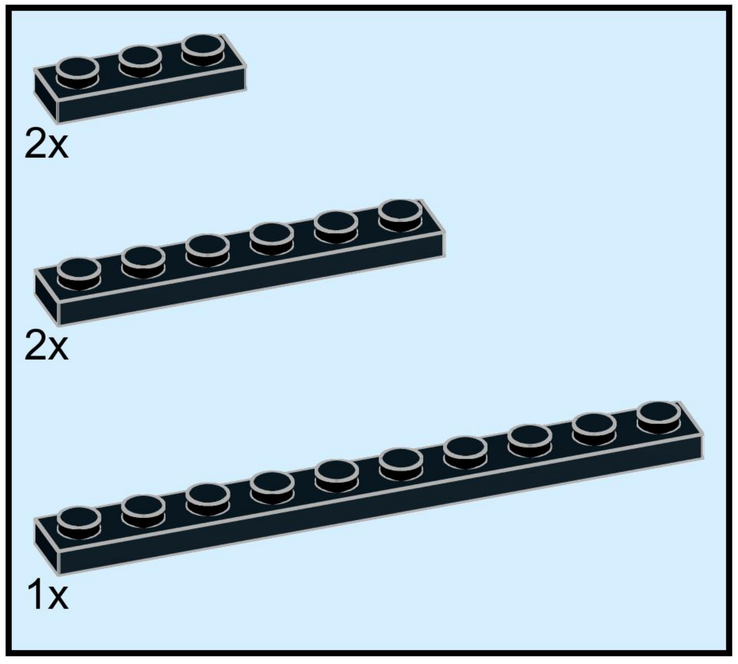

30

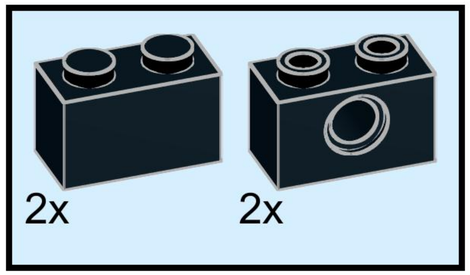

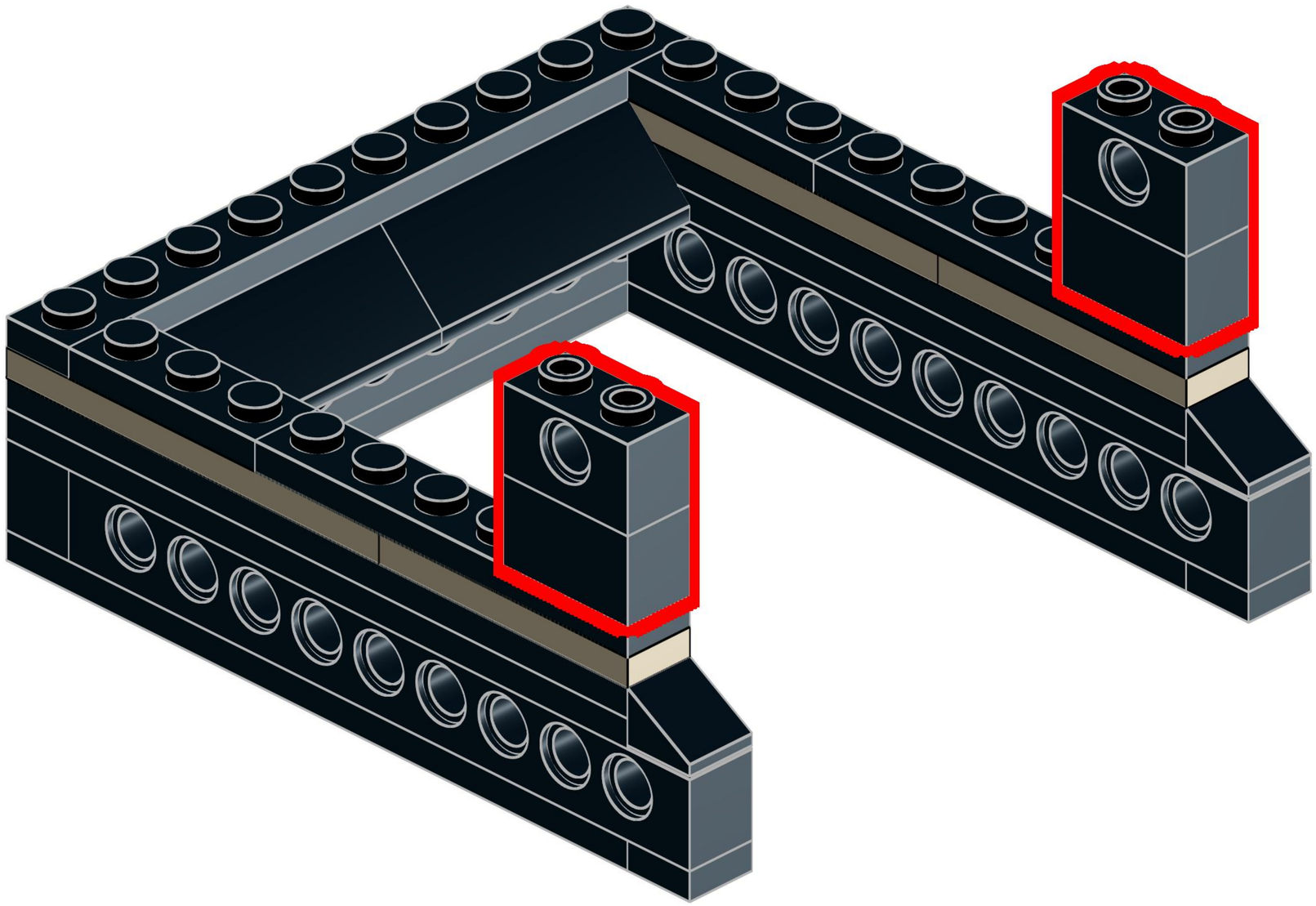

31

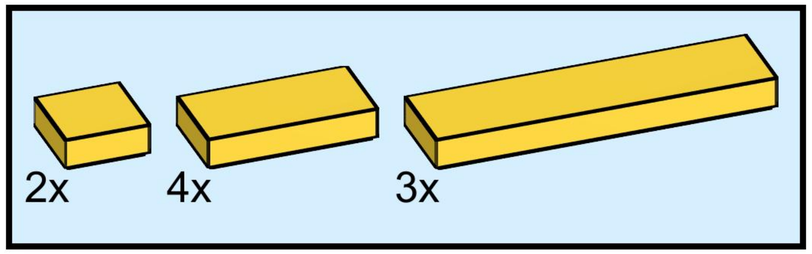

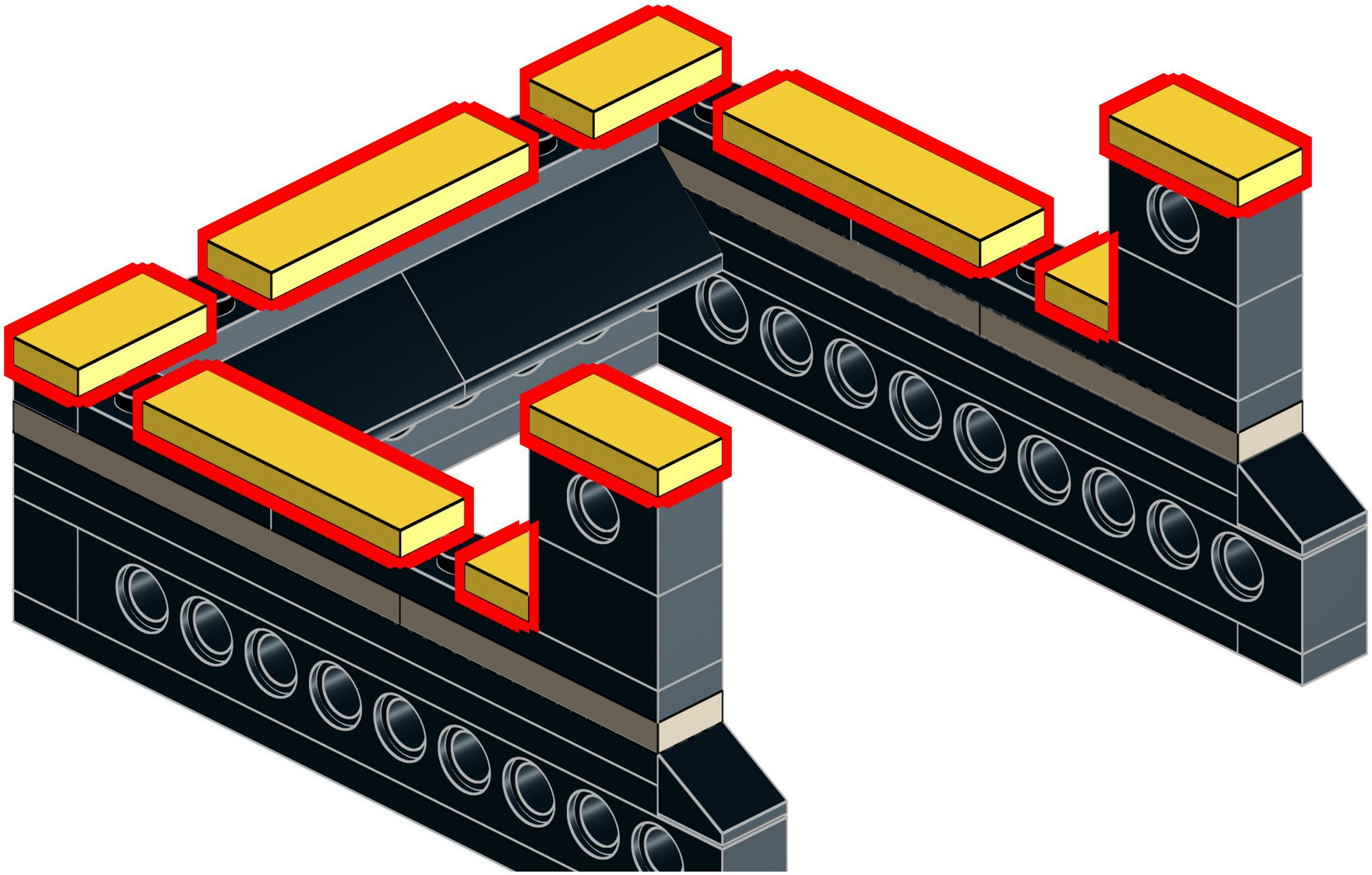

32

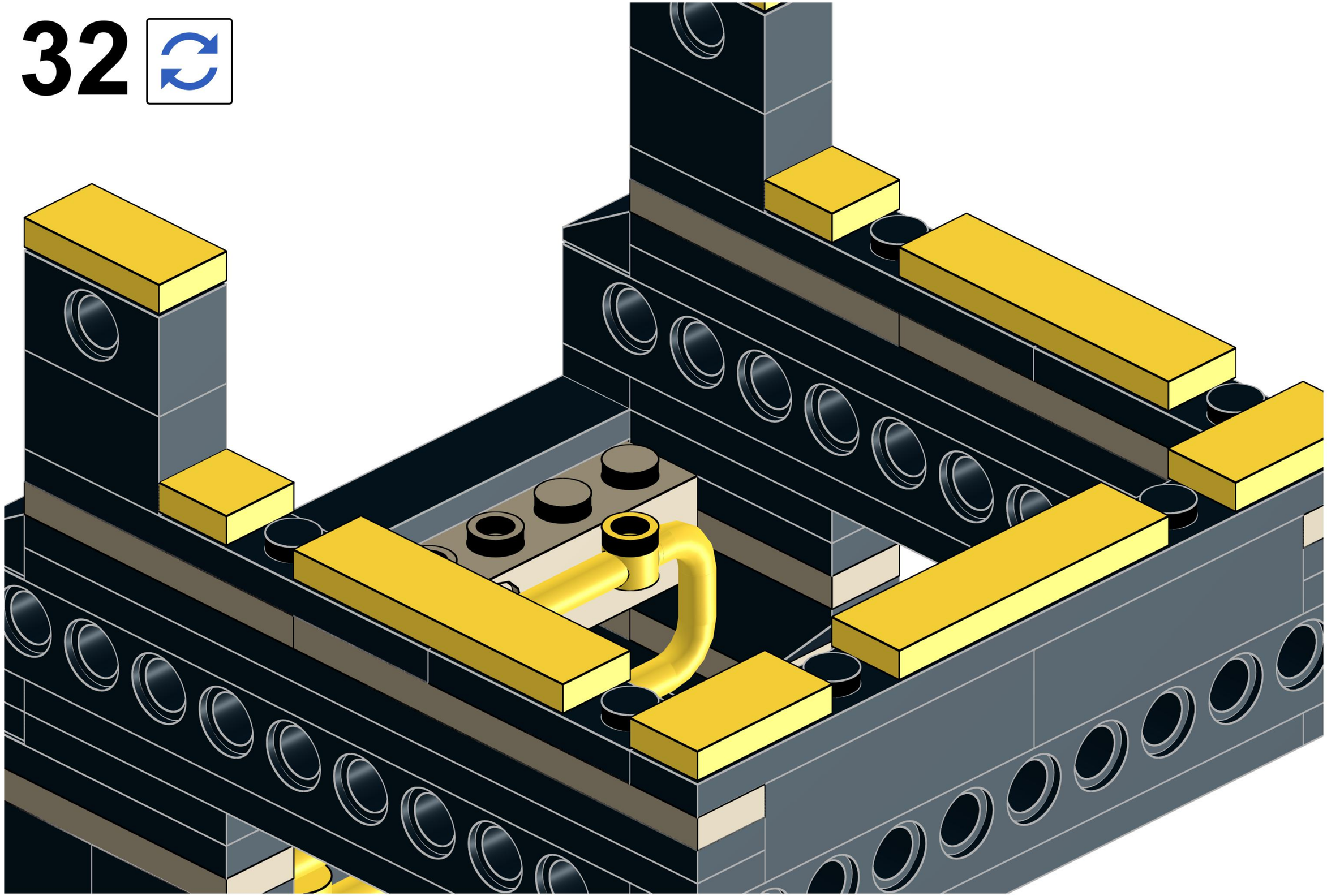

33

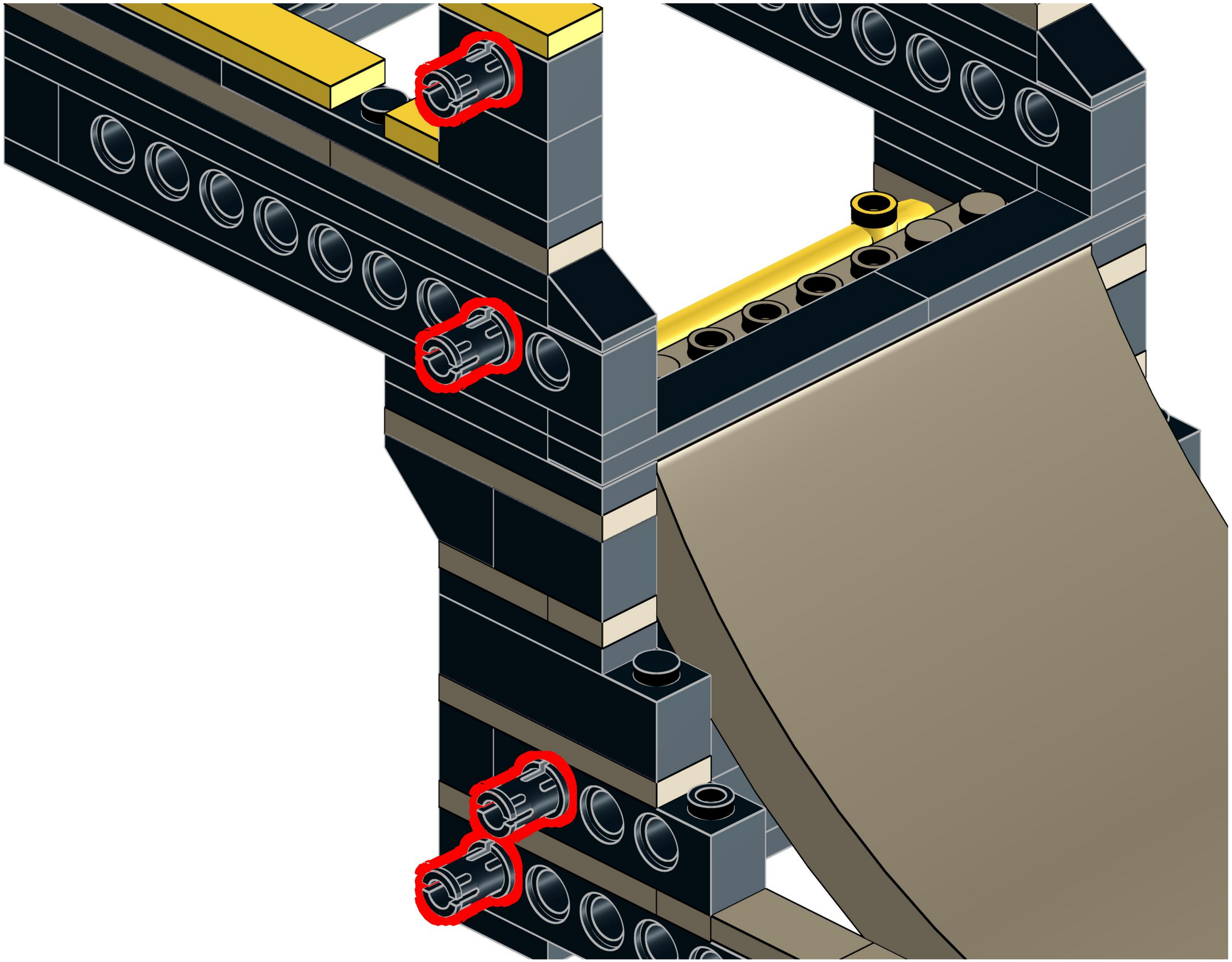

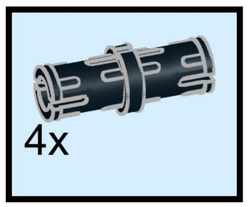

34

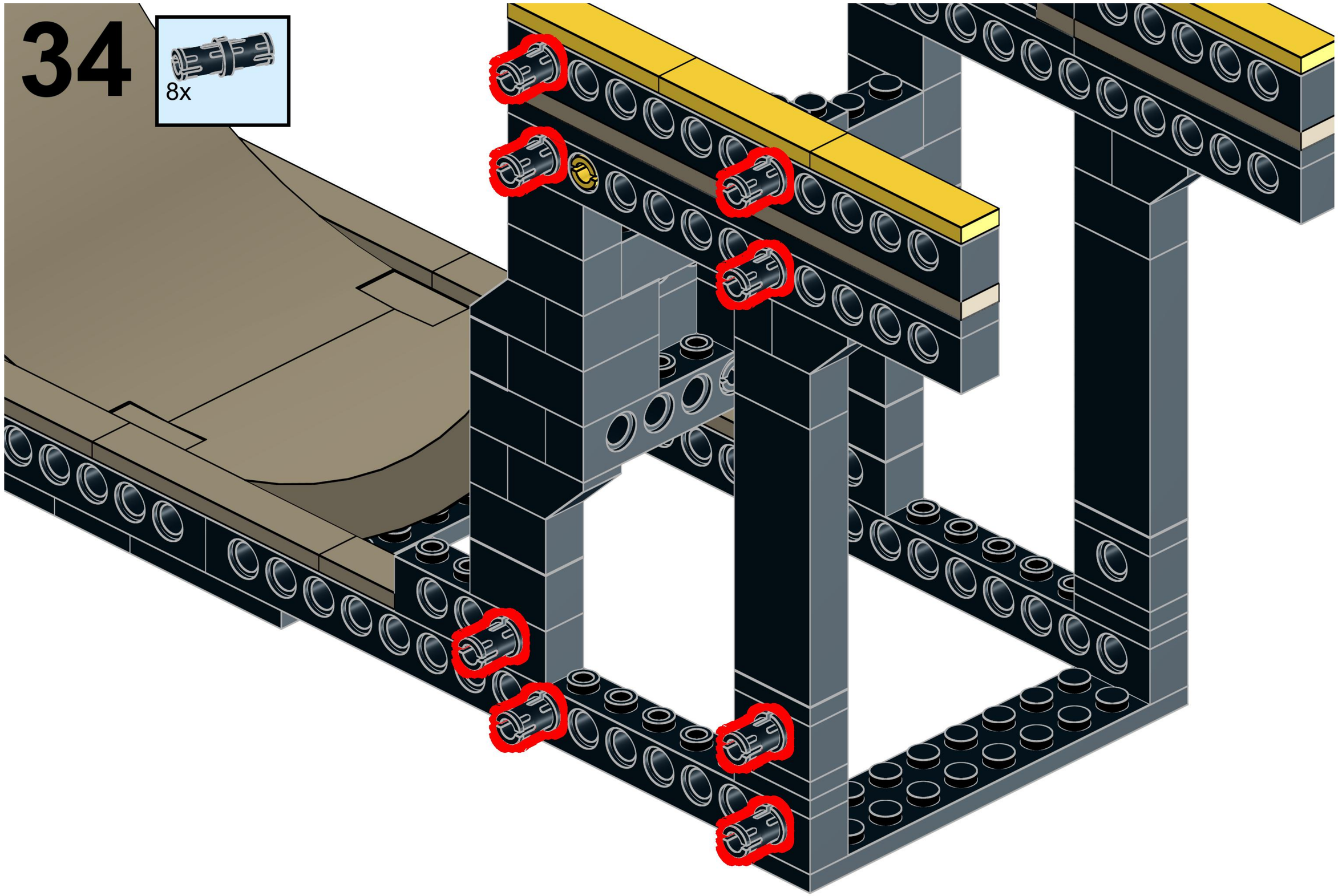

35

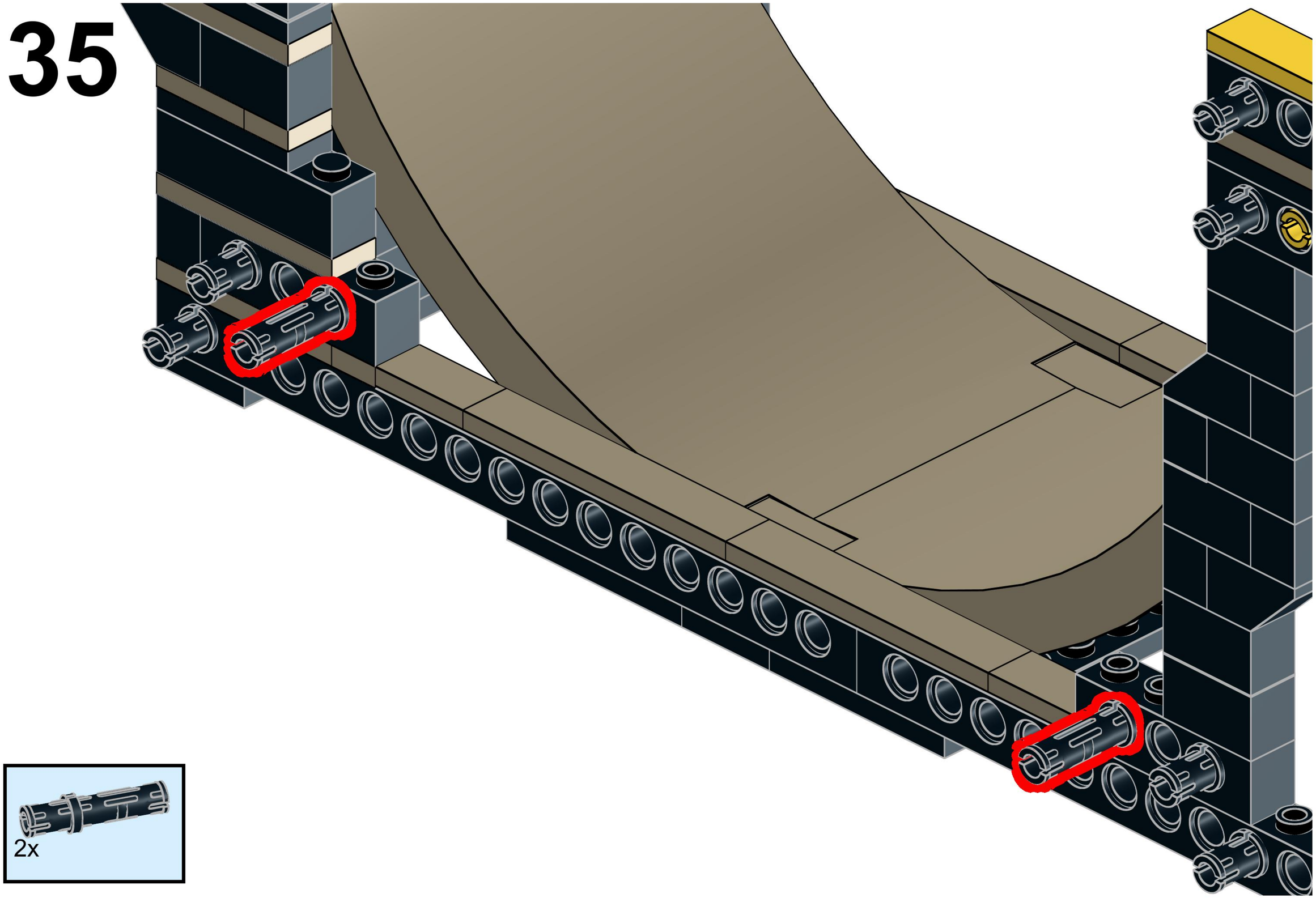

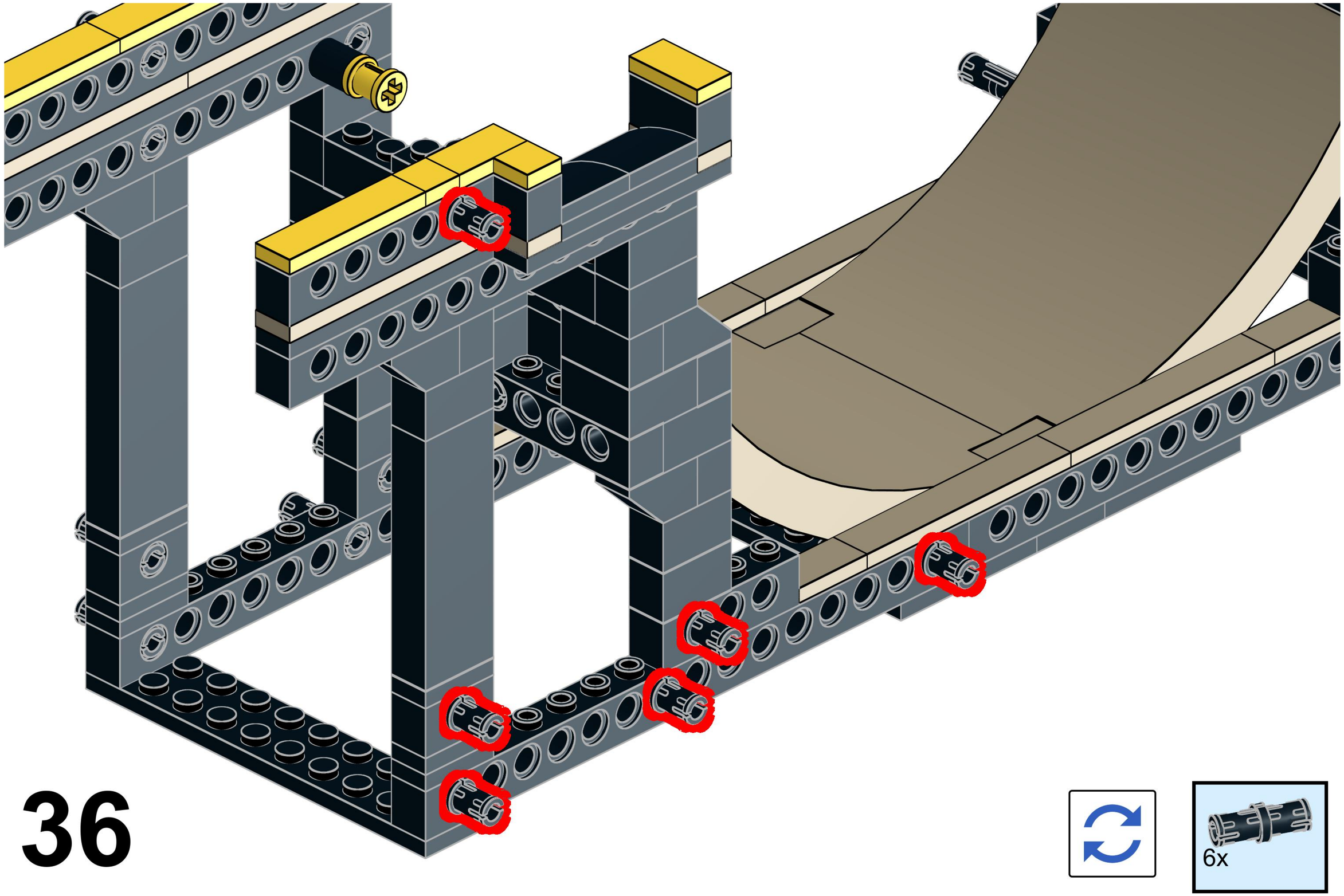
6x

37

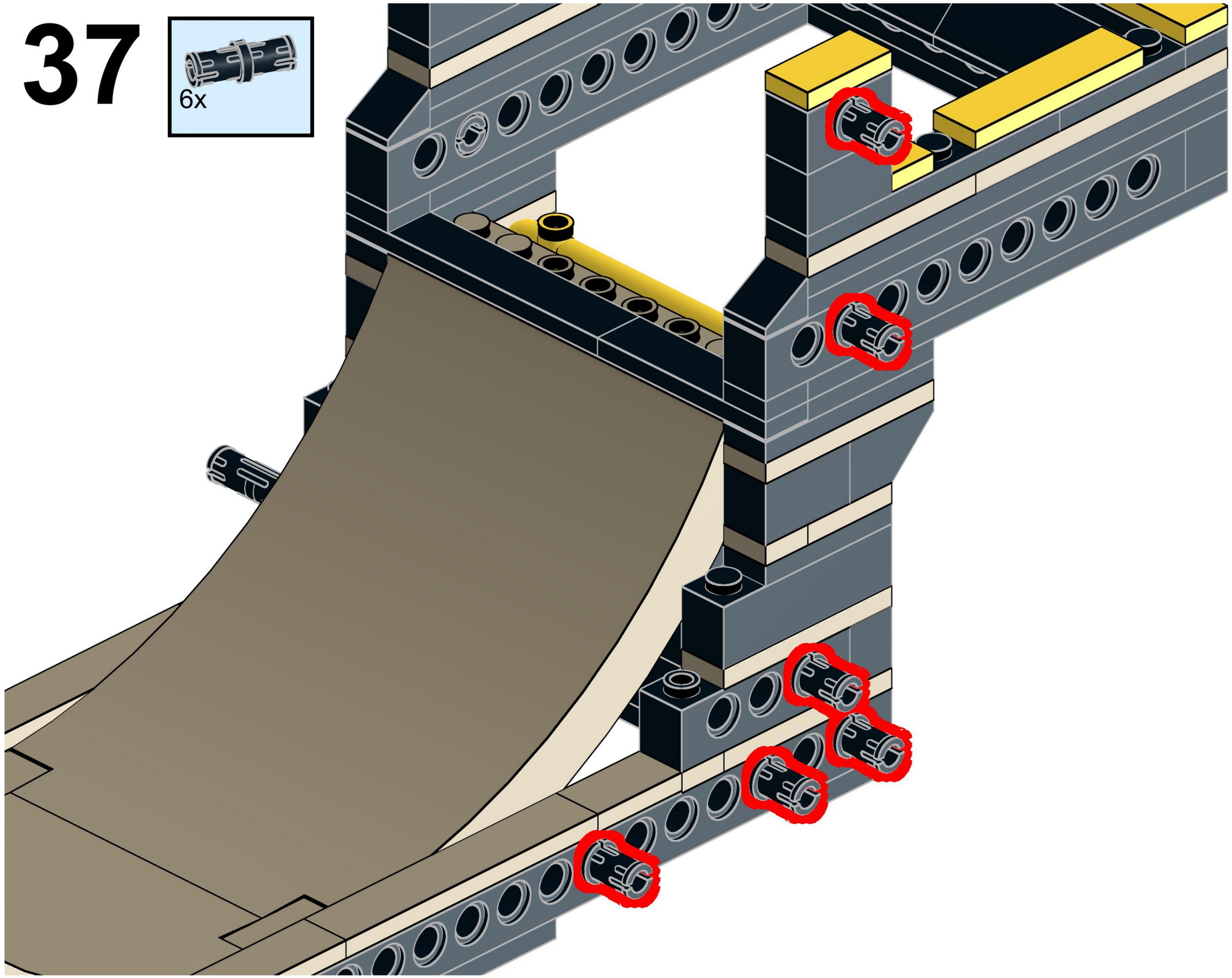

38

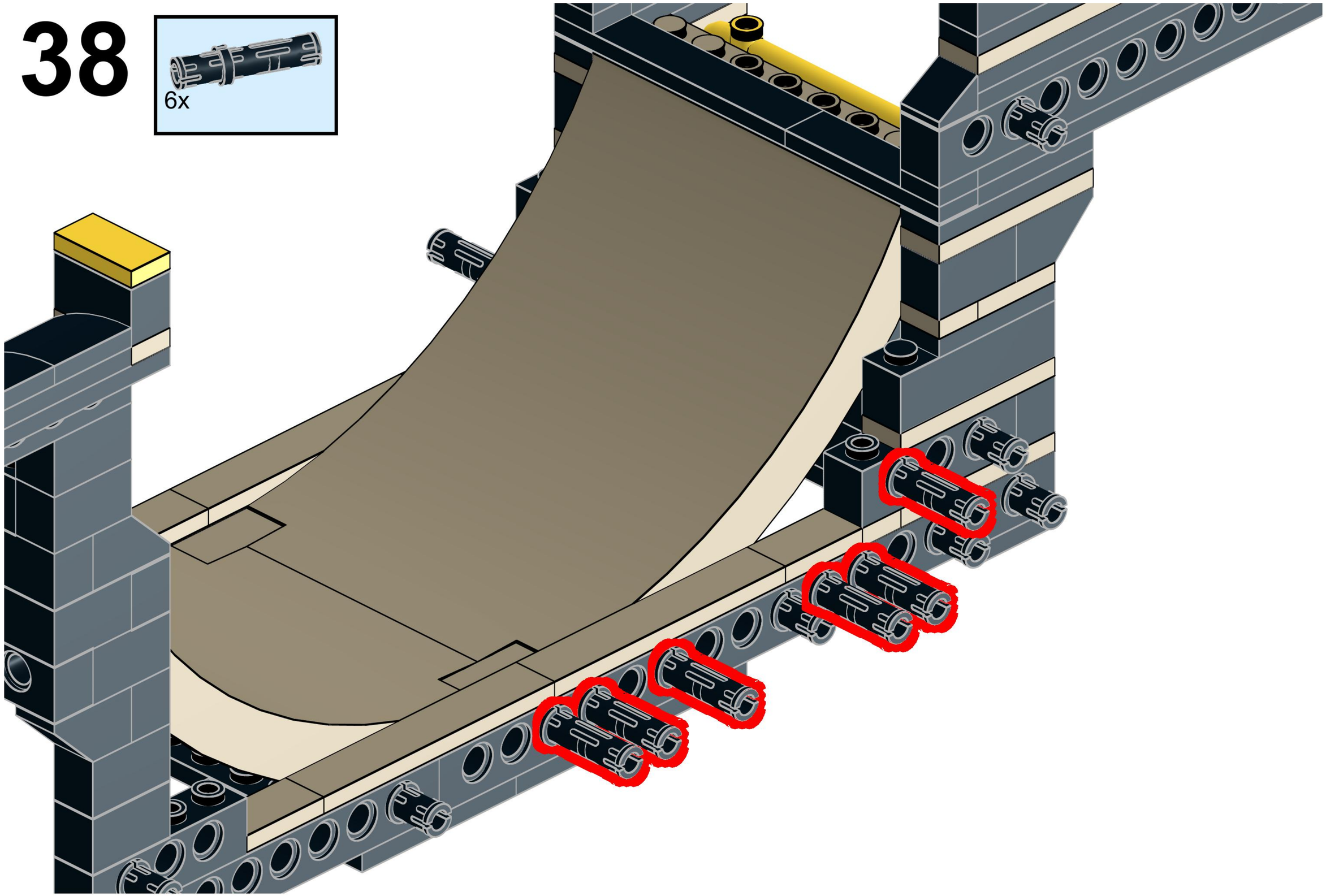

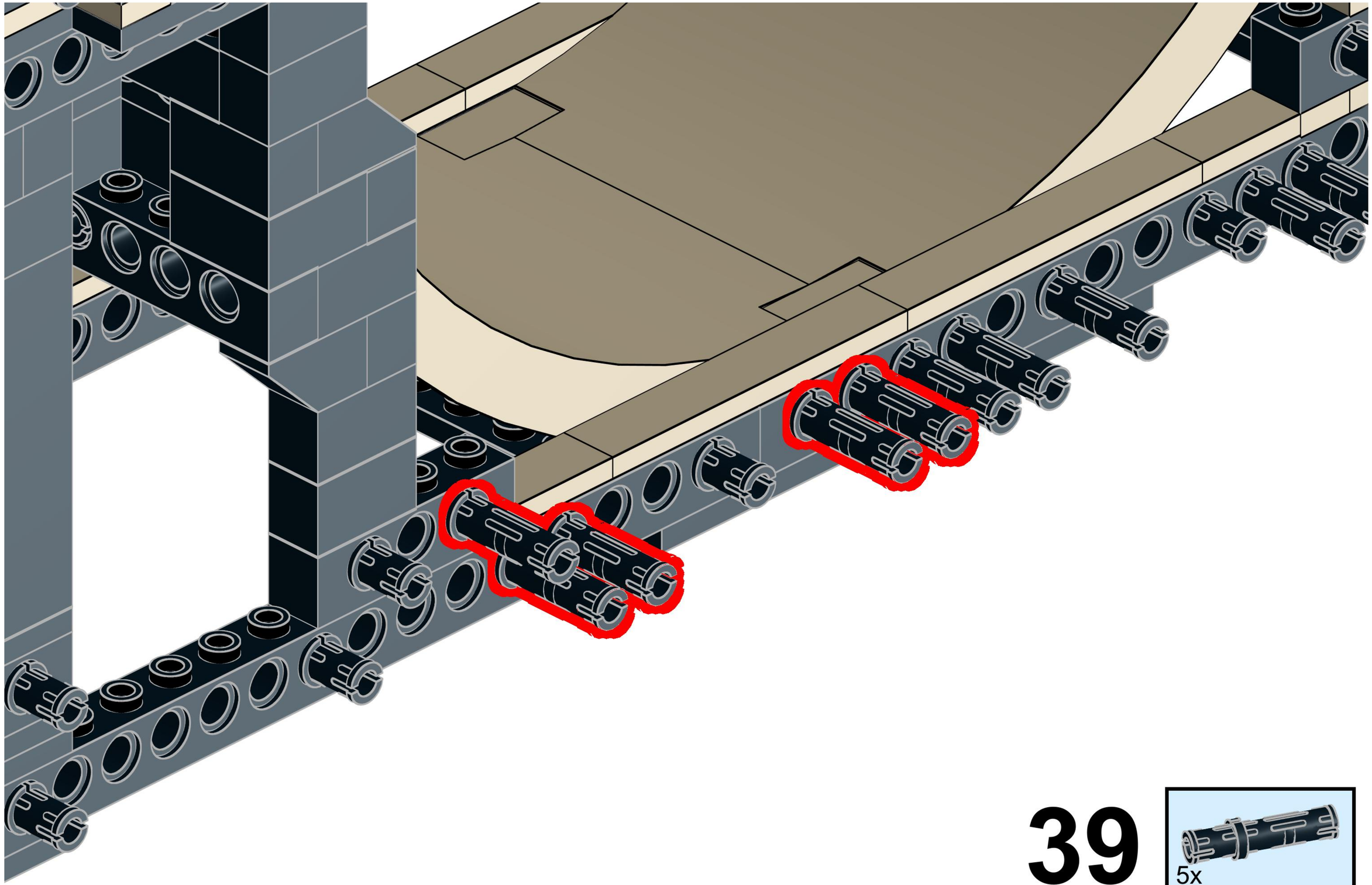

39

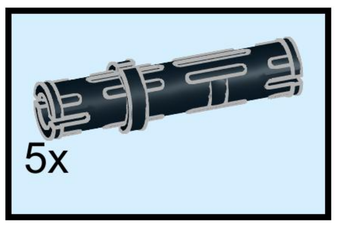

40

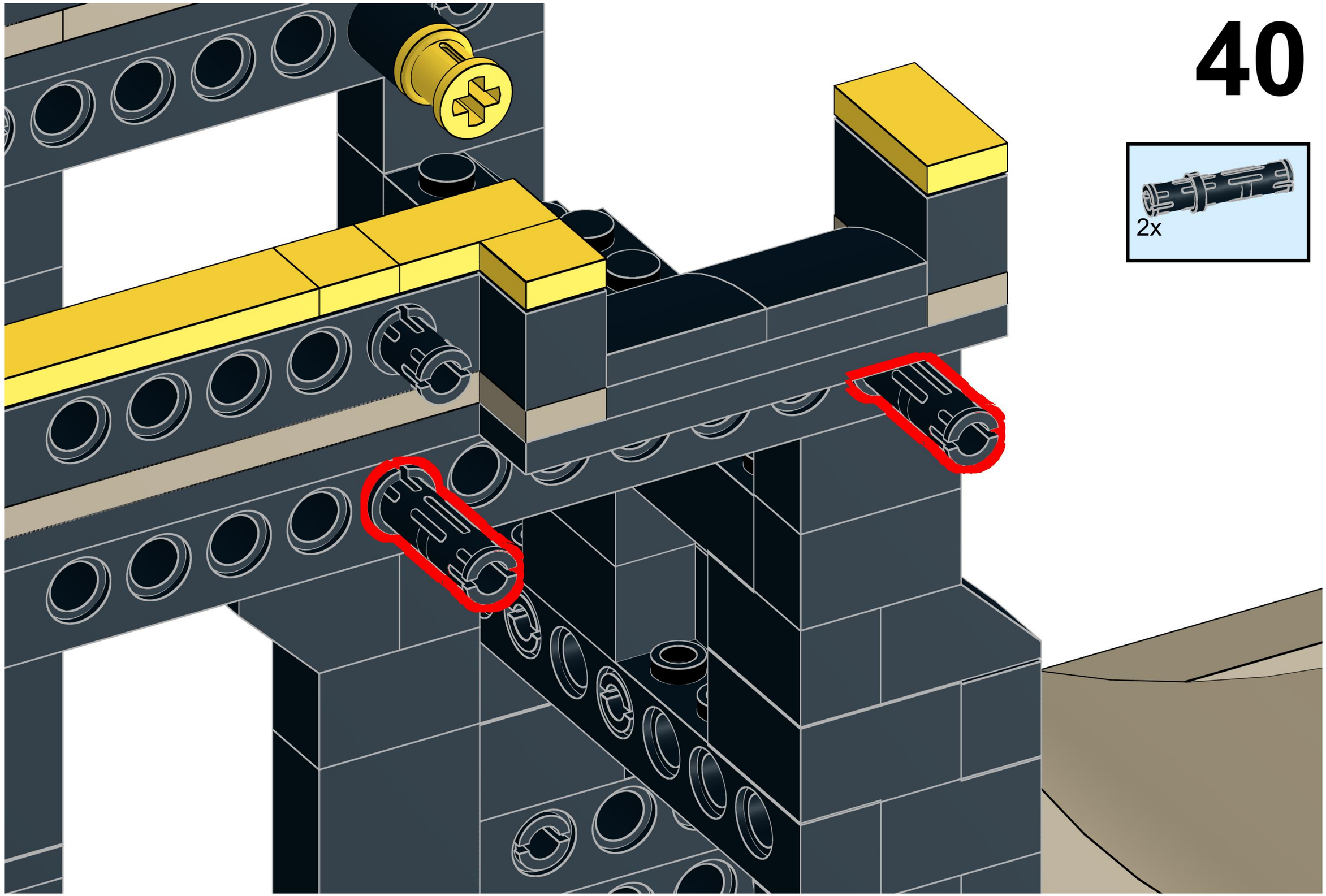

41

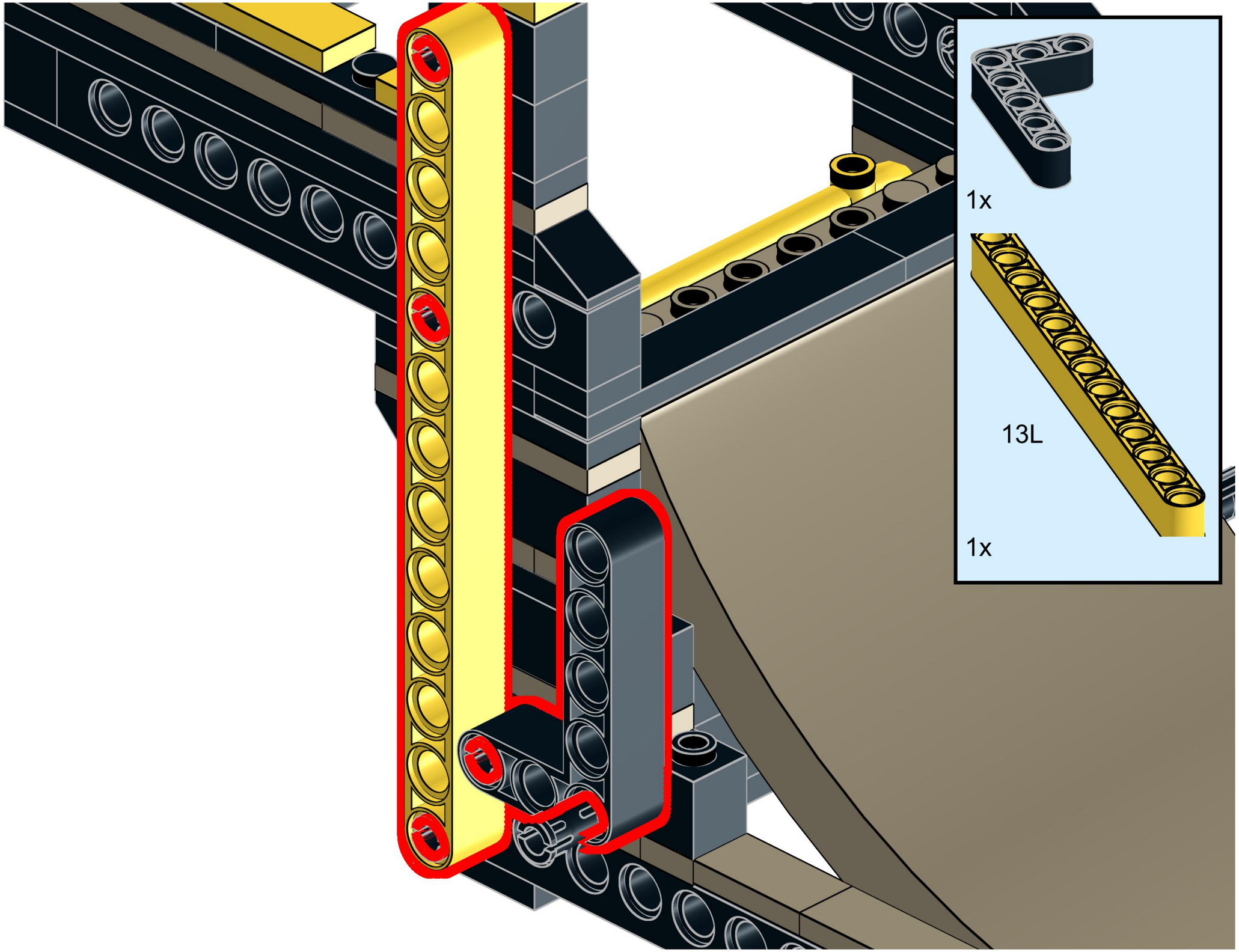

42

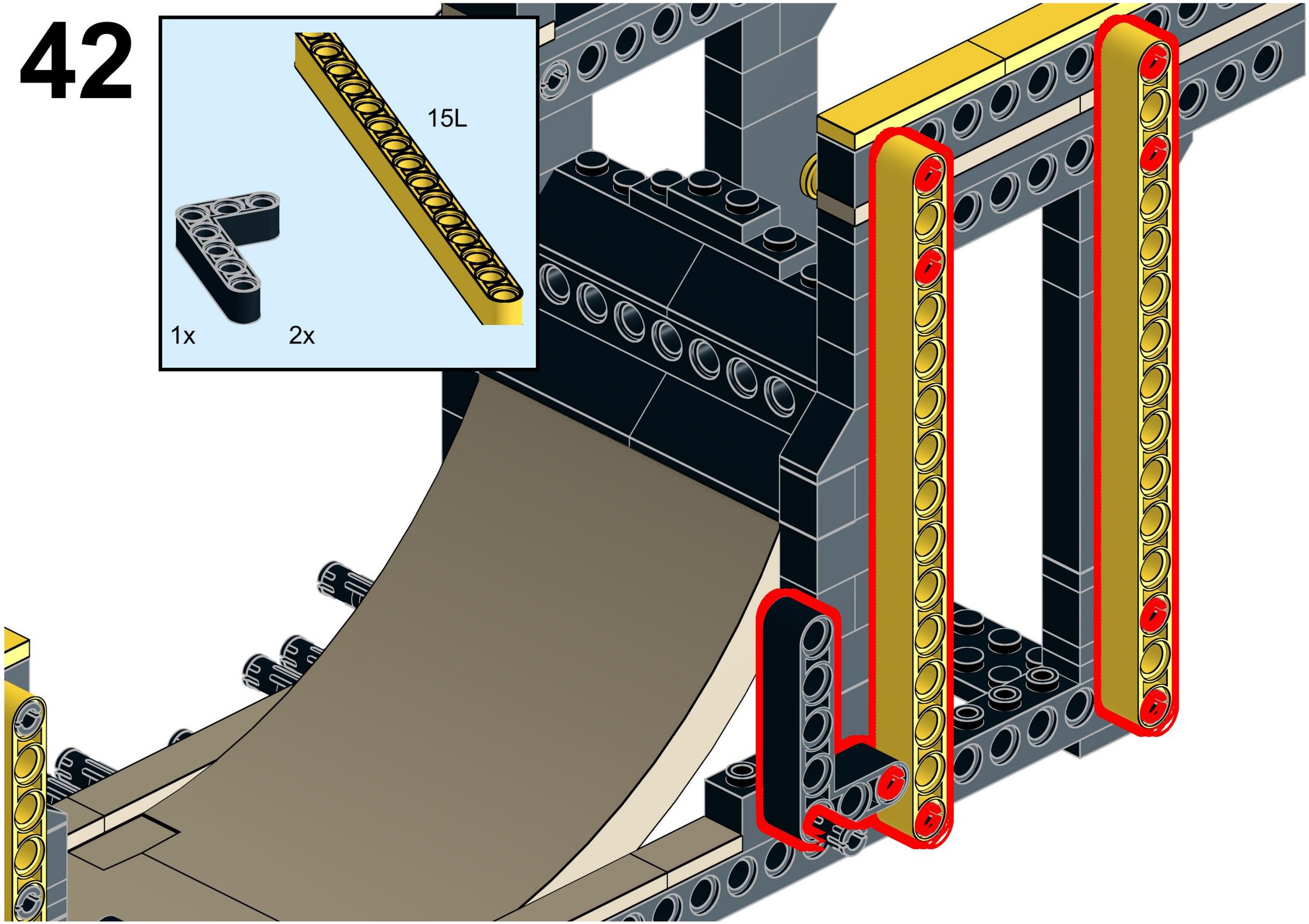

43

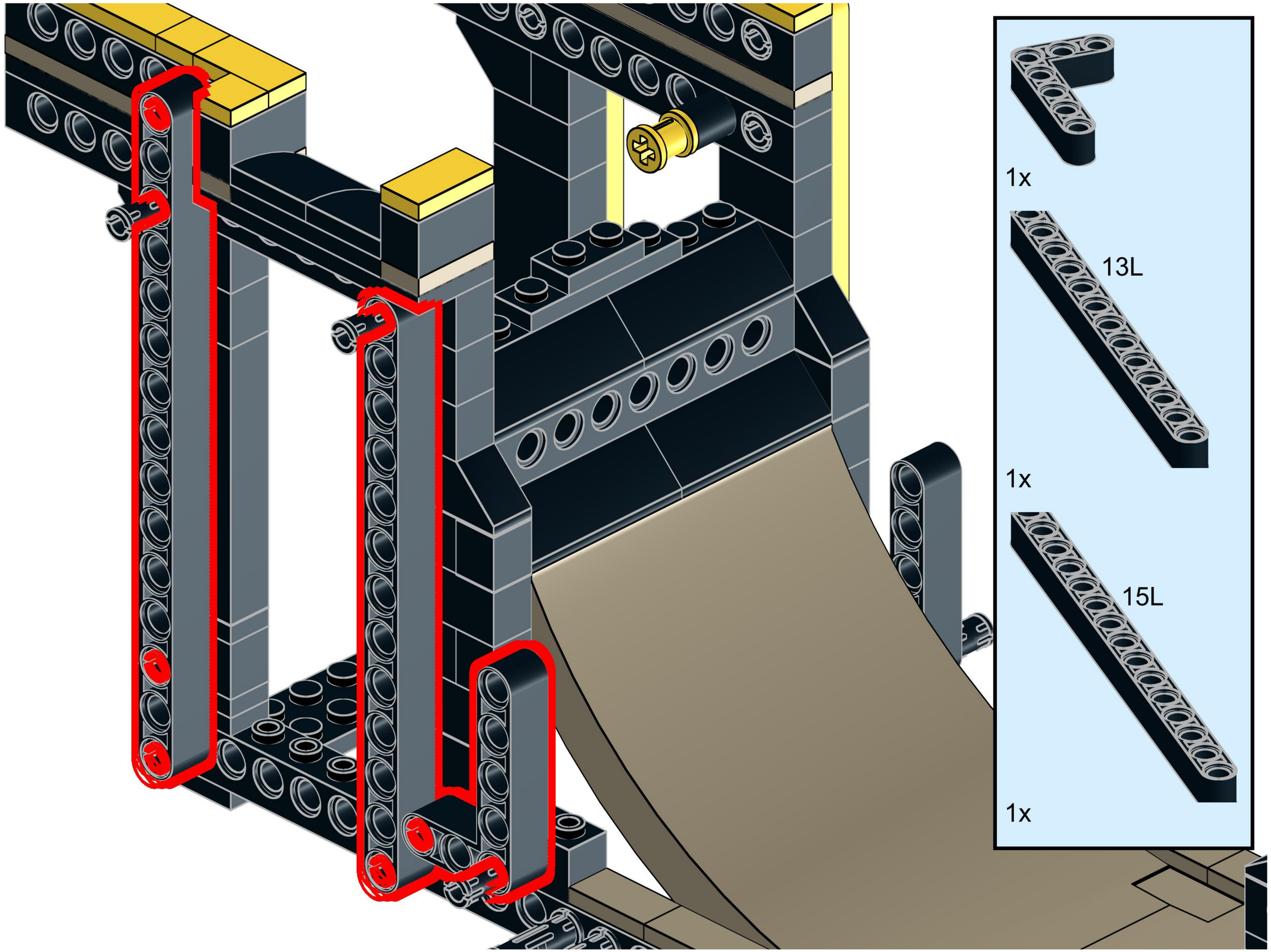

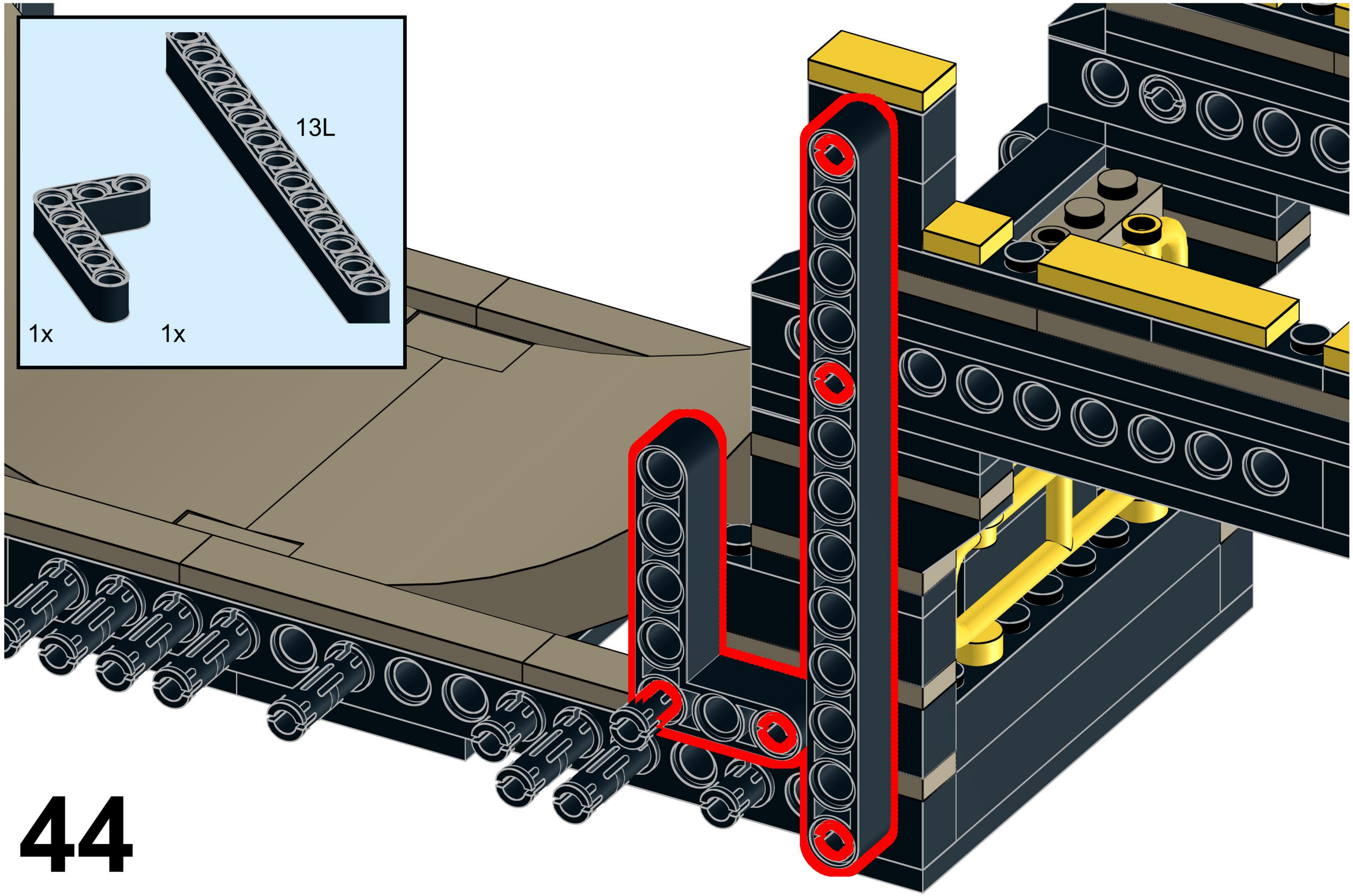
13L
1x
1x

45

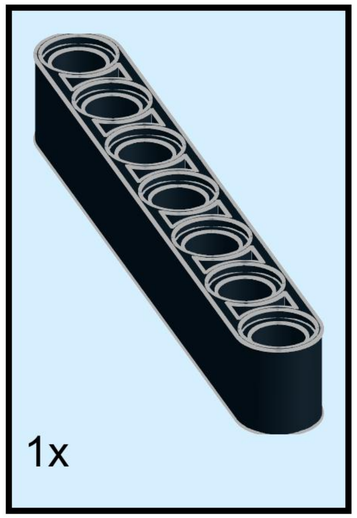

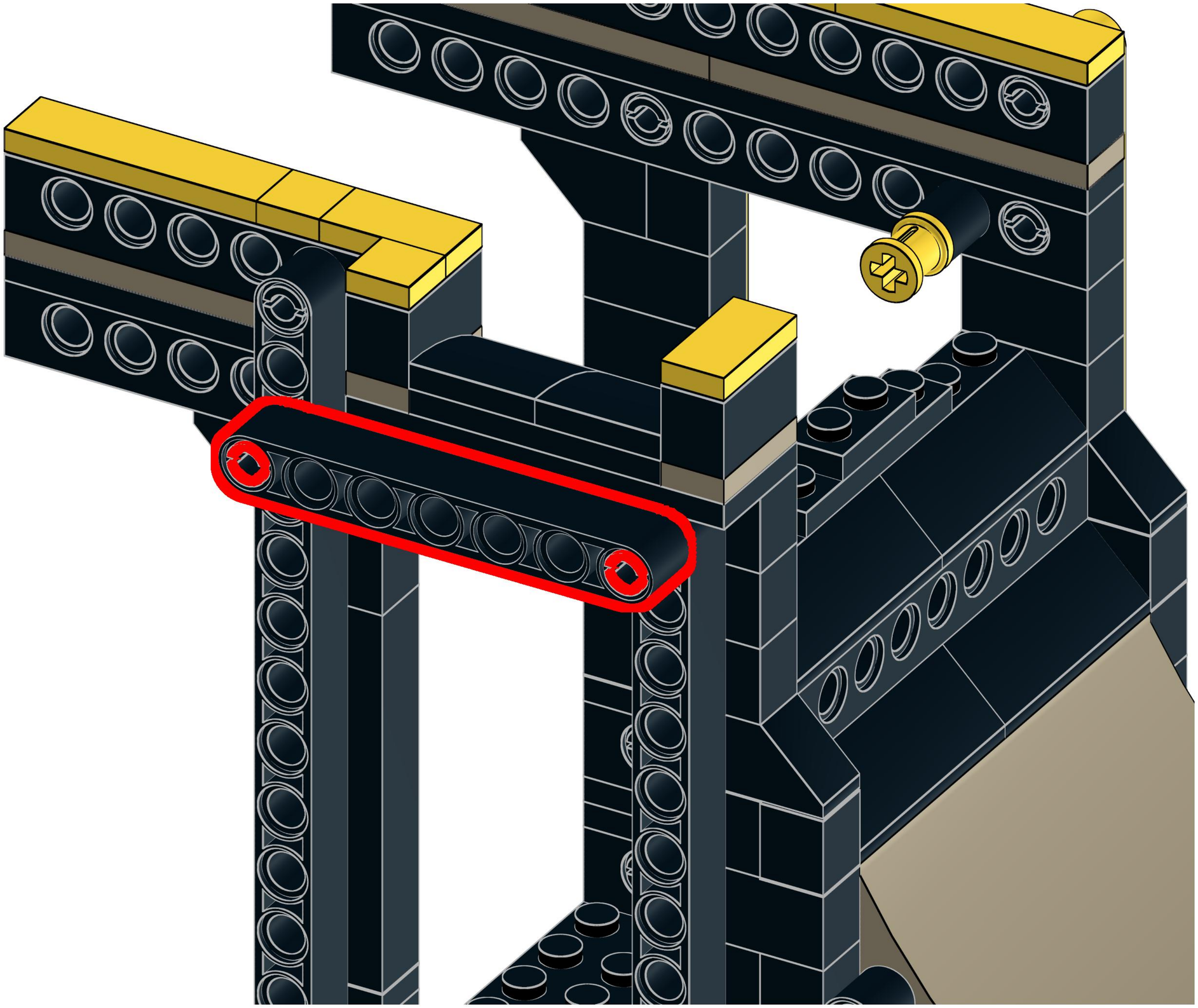

46

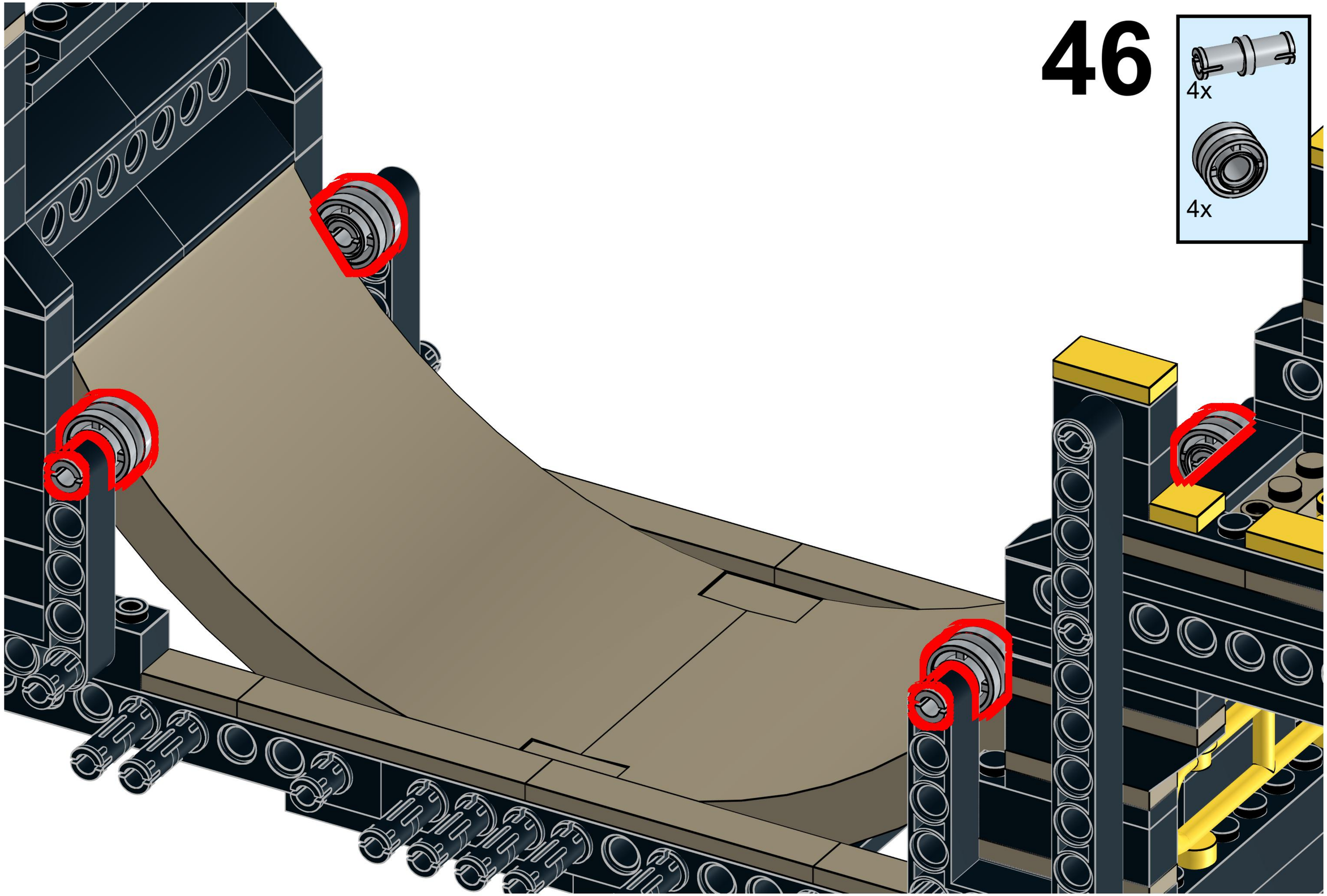

47

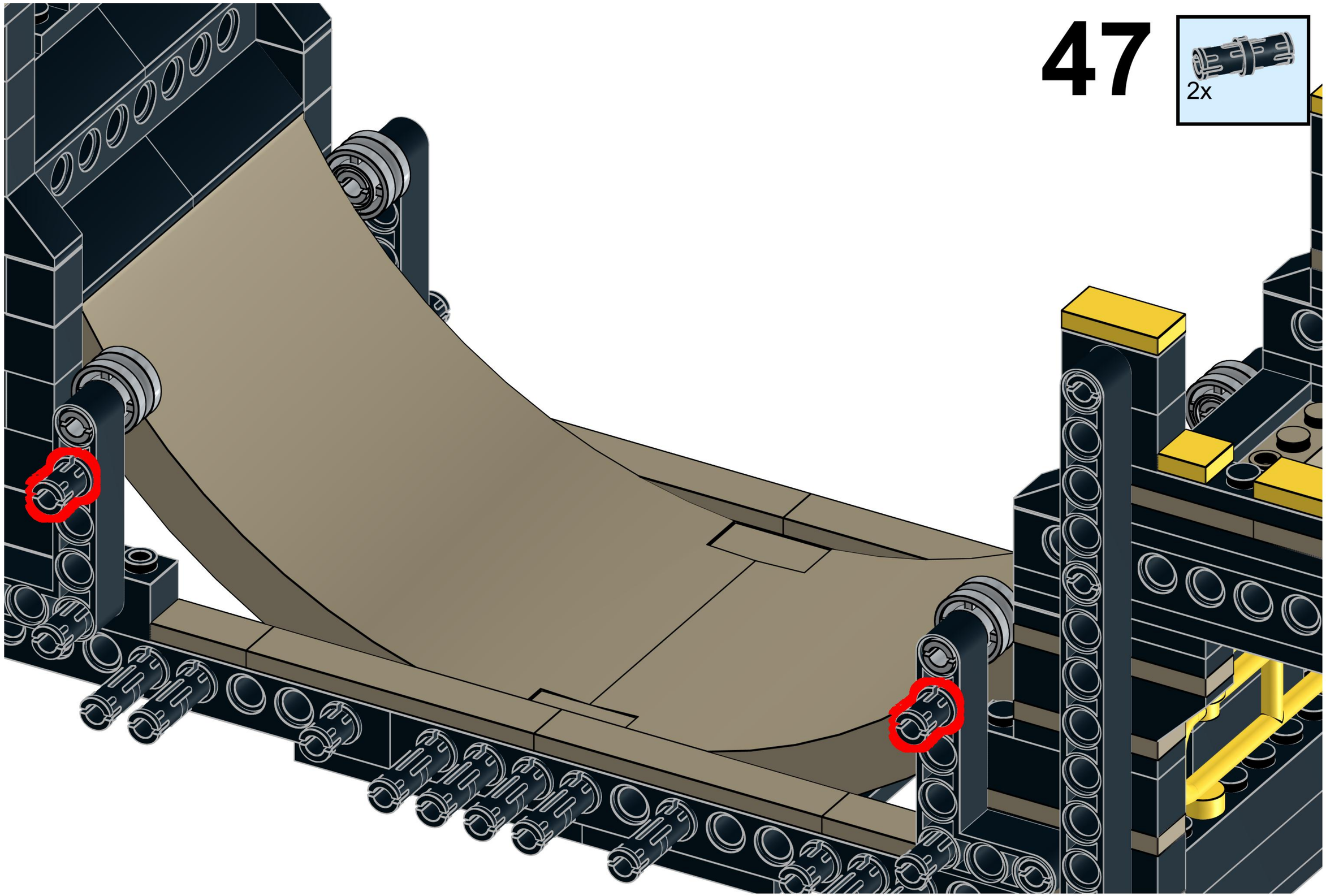

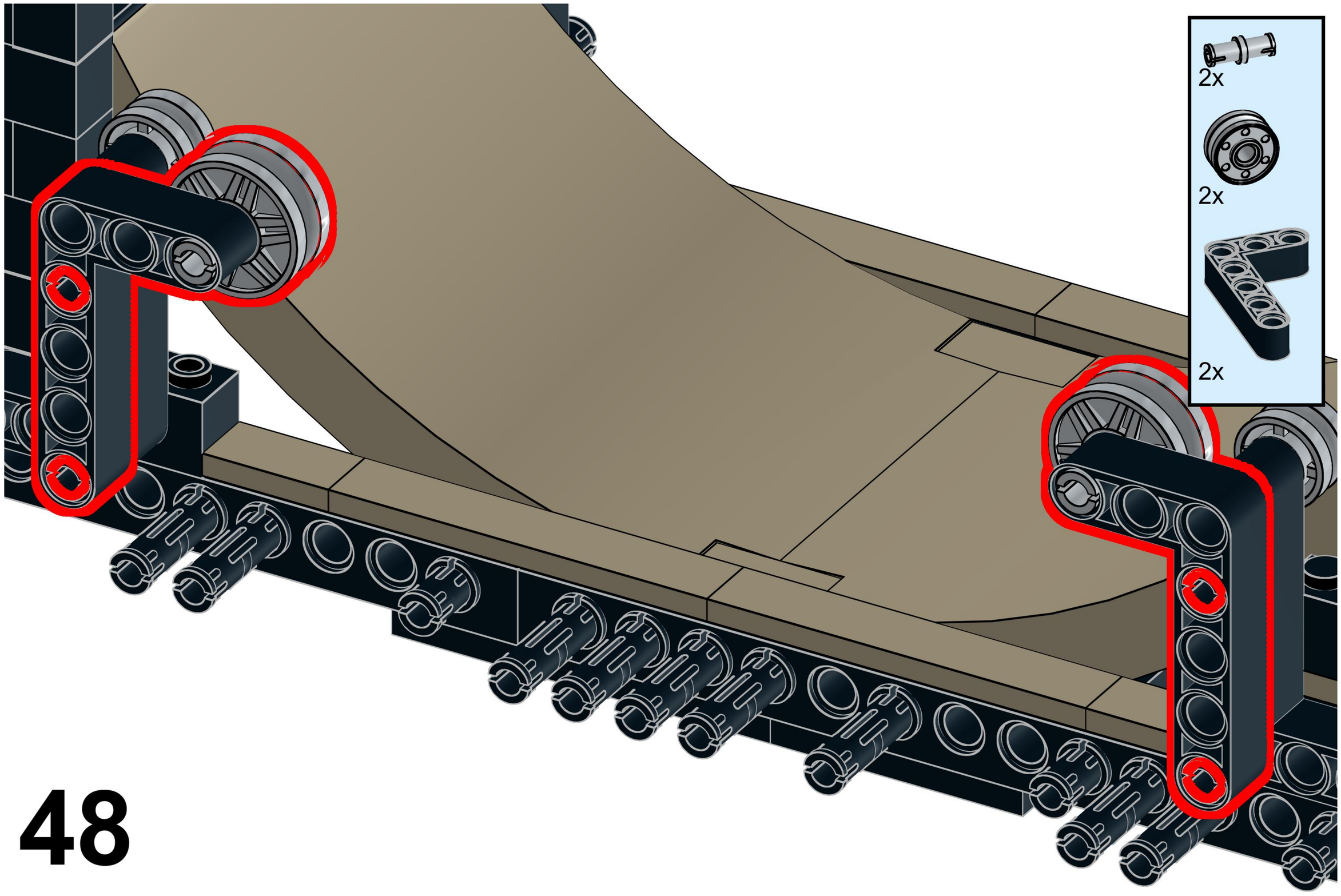

48

49

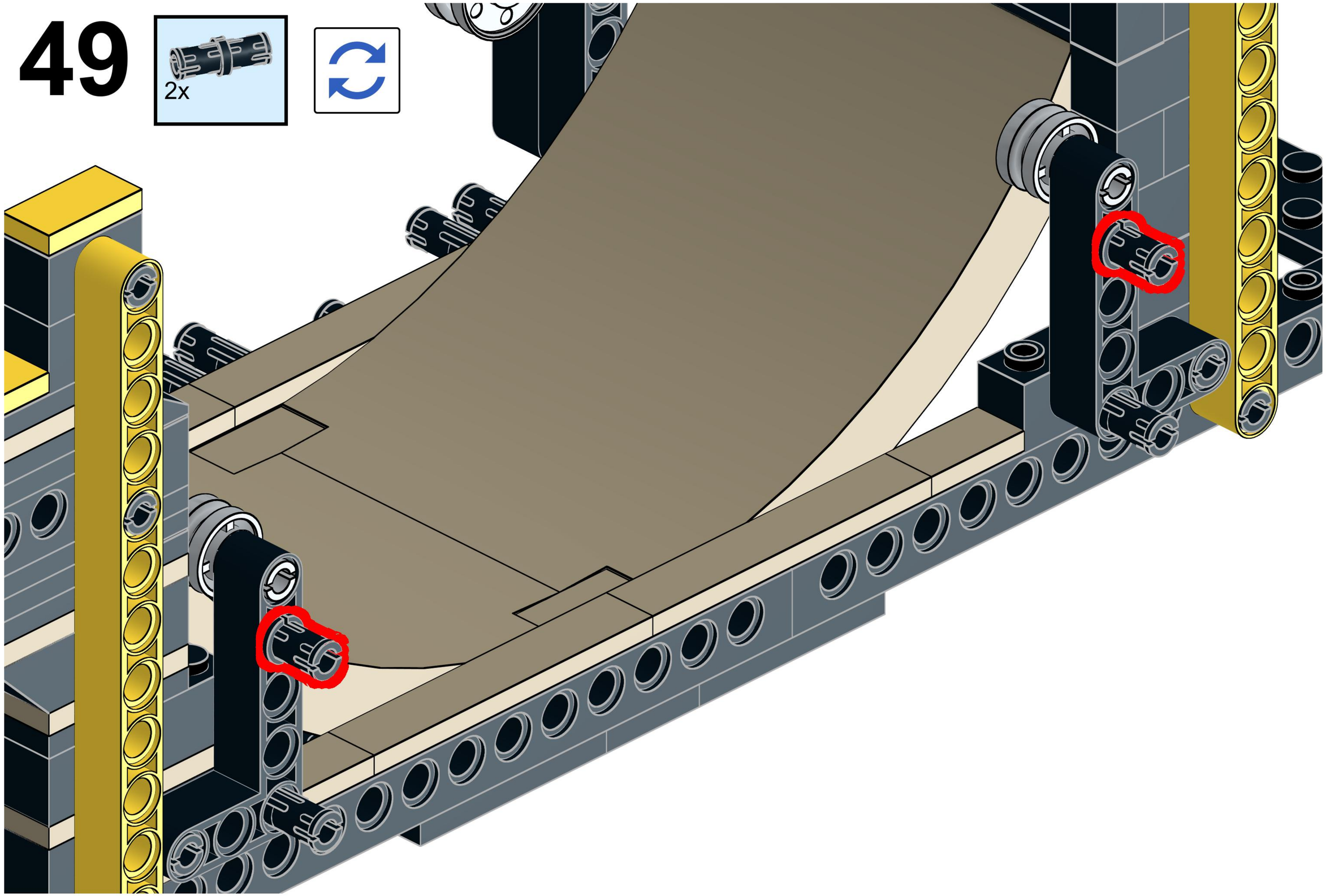

50

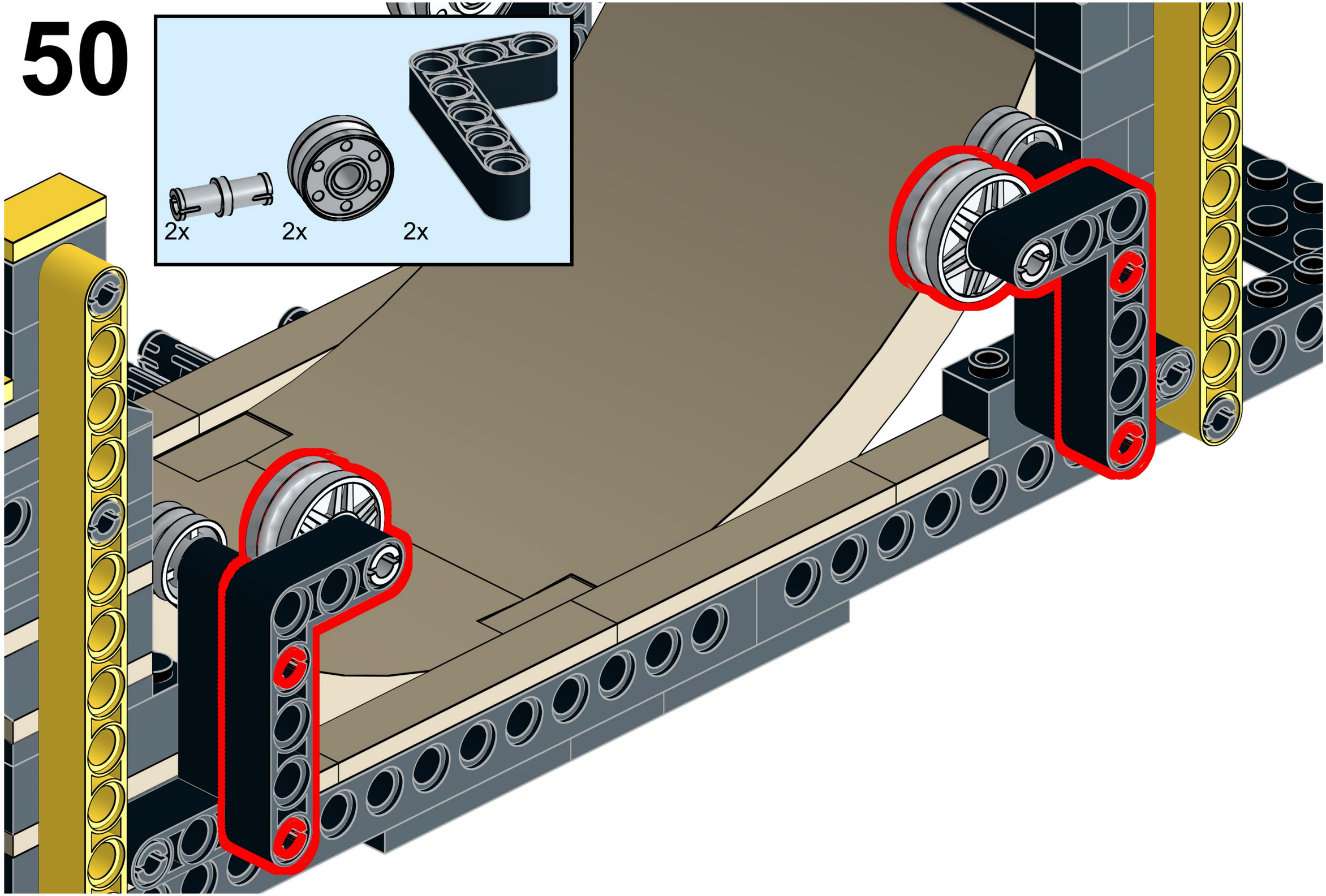

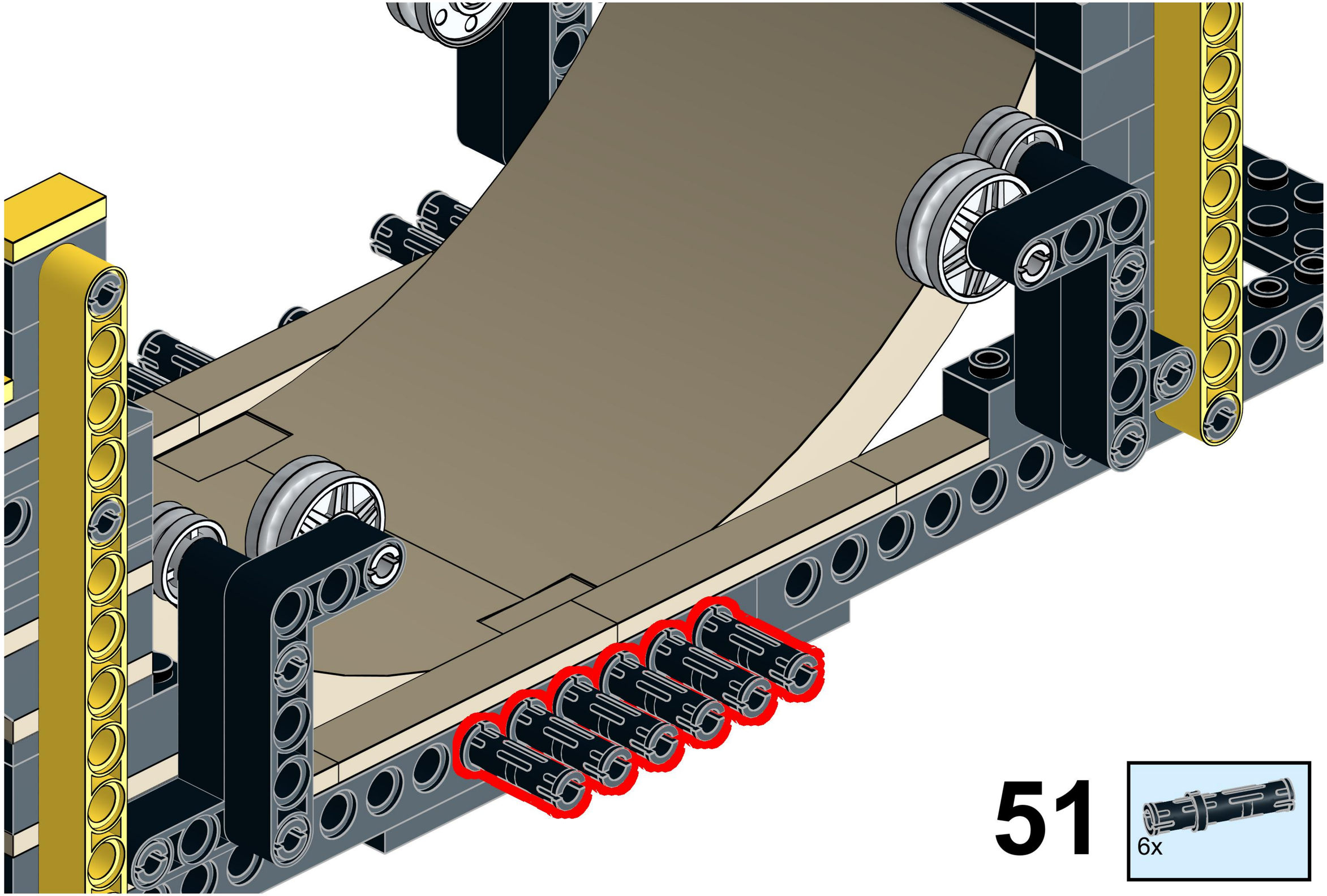

51

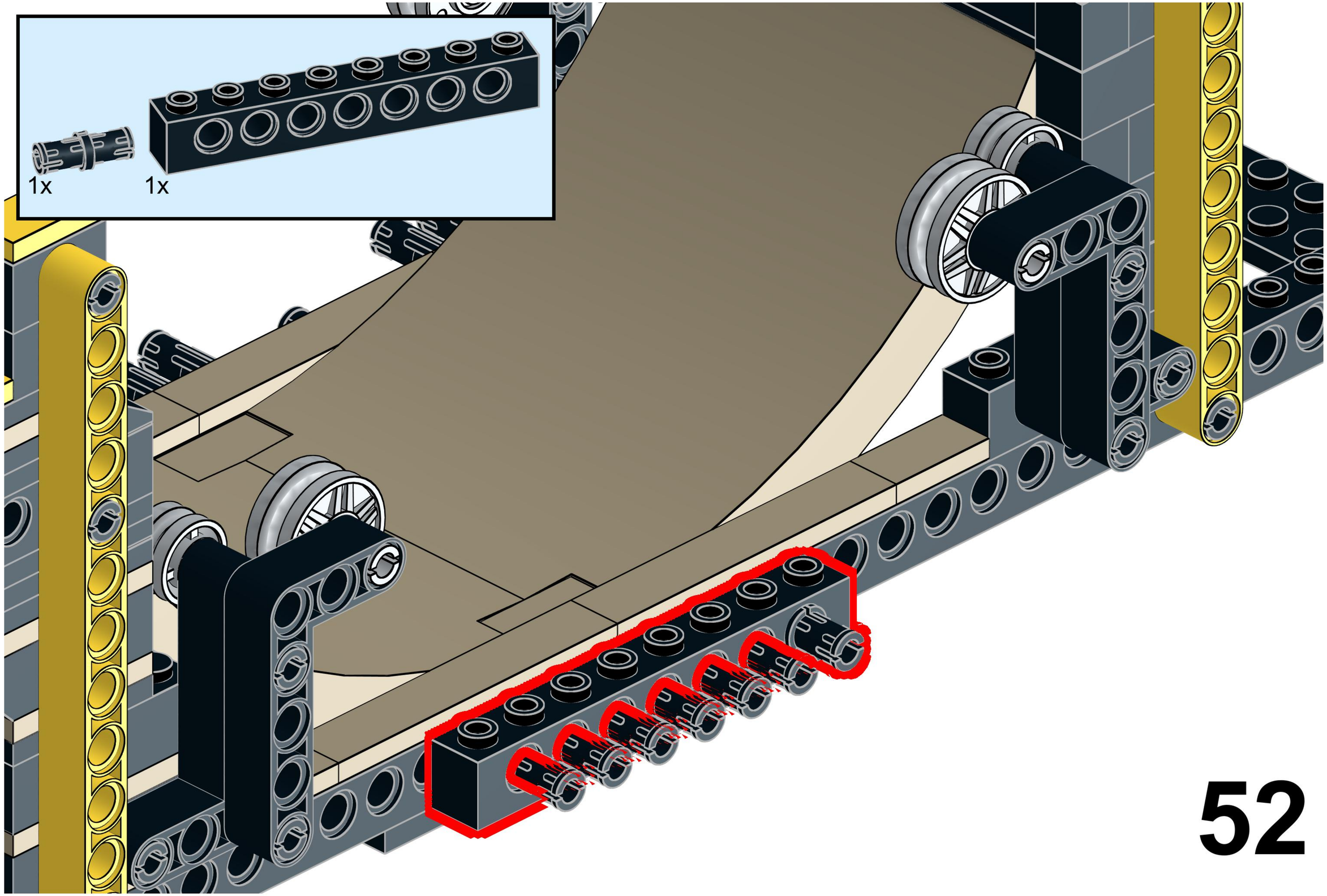
1x
1x

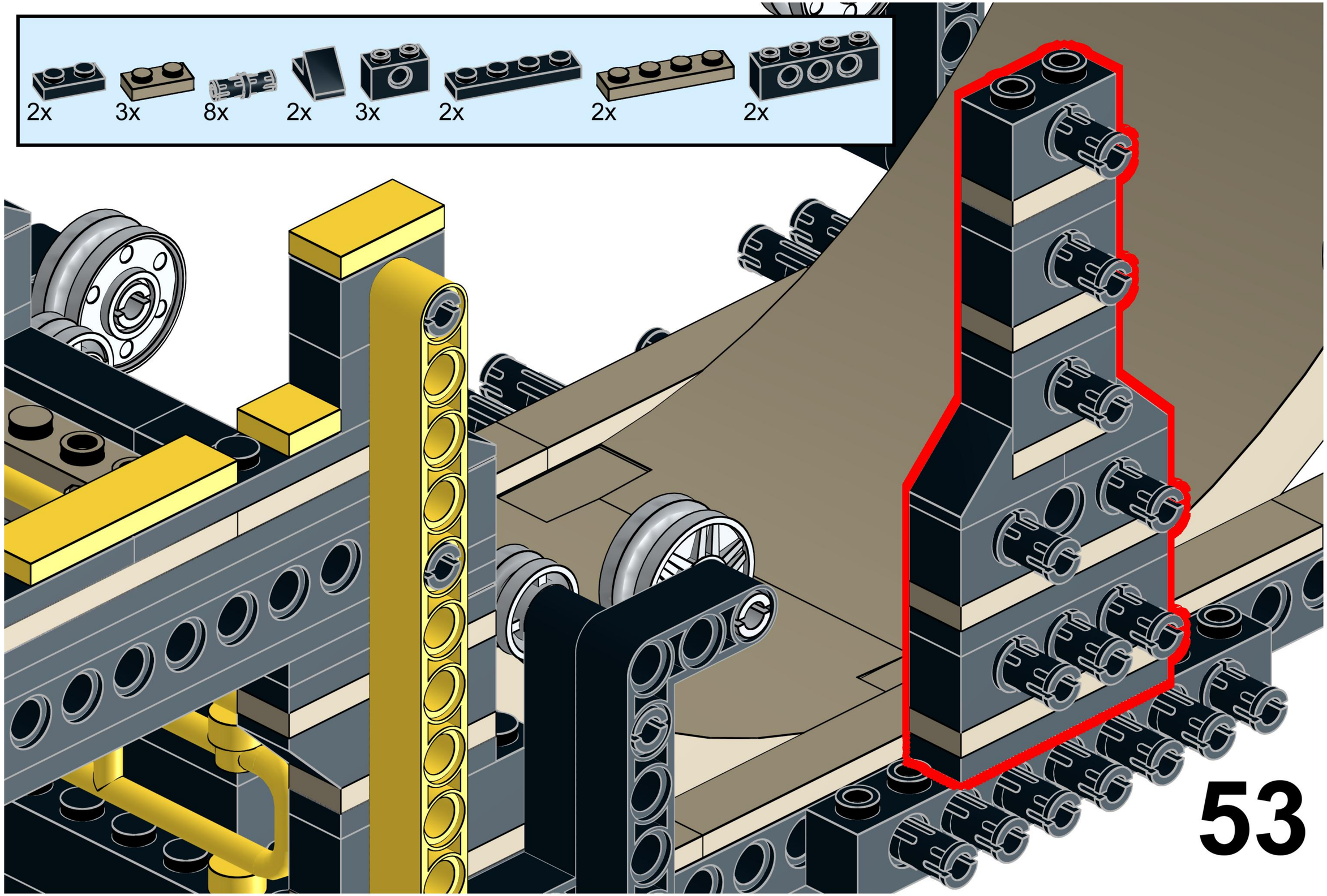
2x
3x
8x
2x
3x
2x
2x
2x

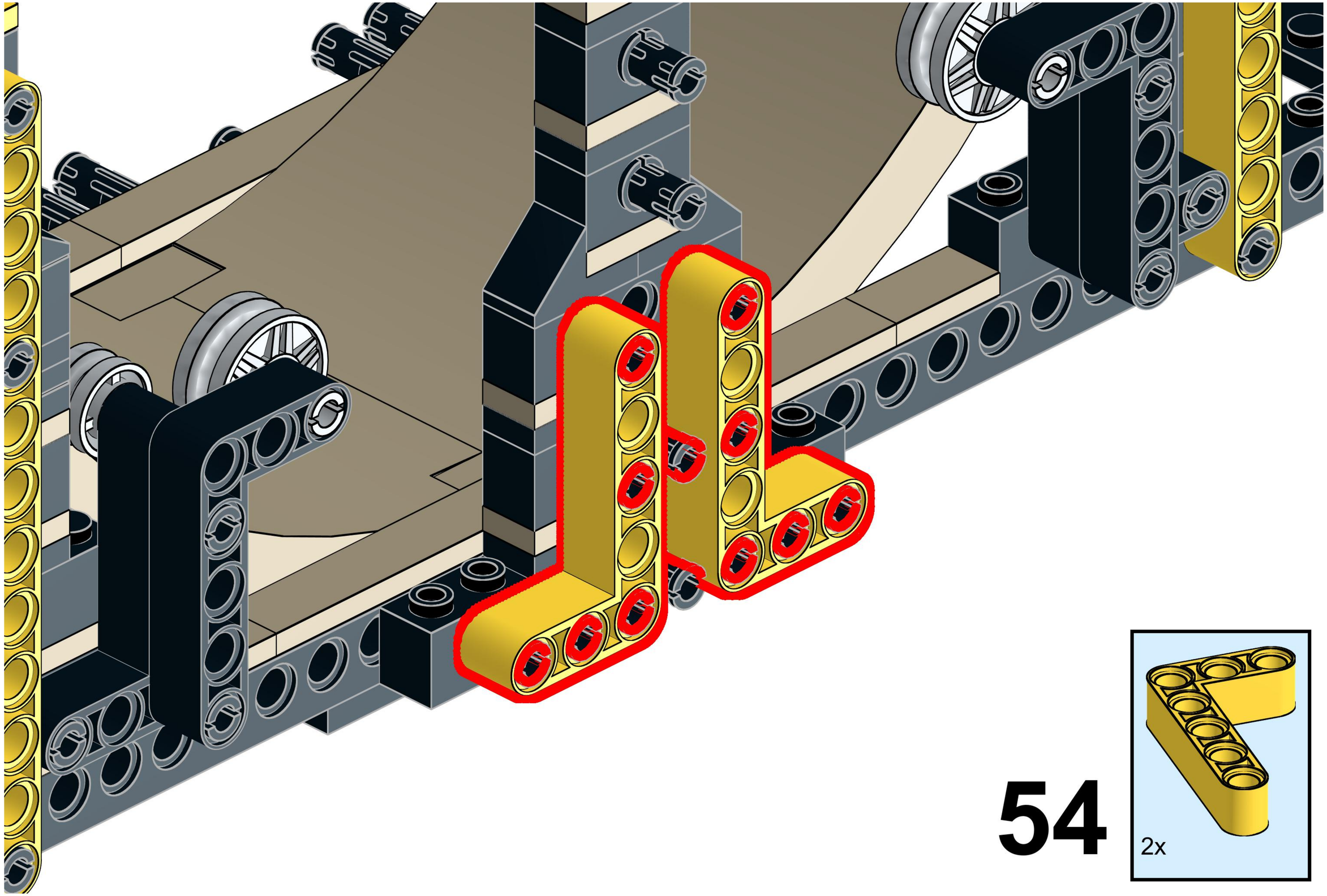
54
2x

55

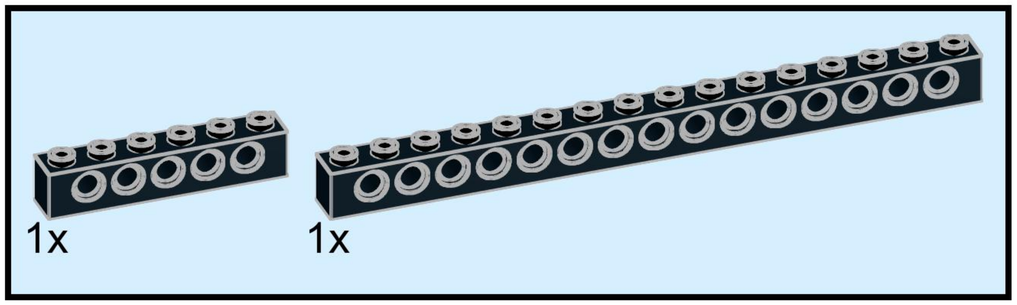

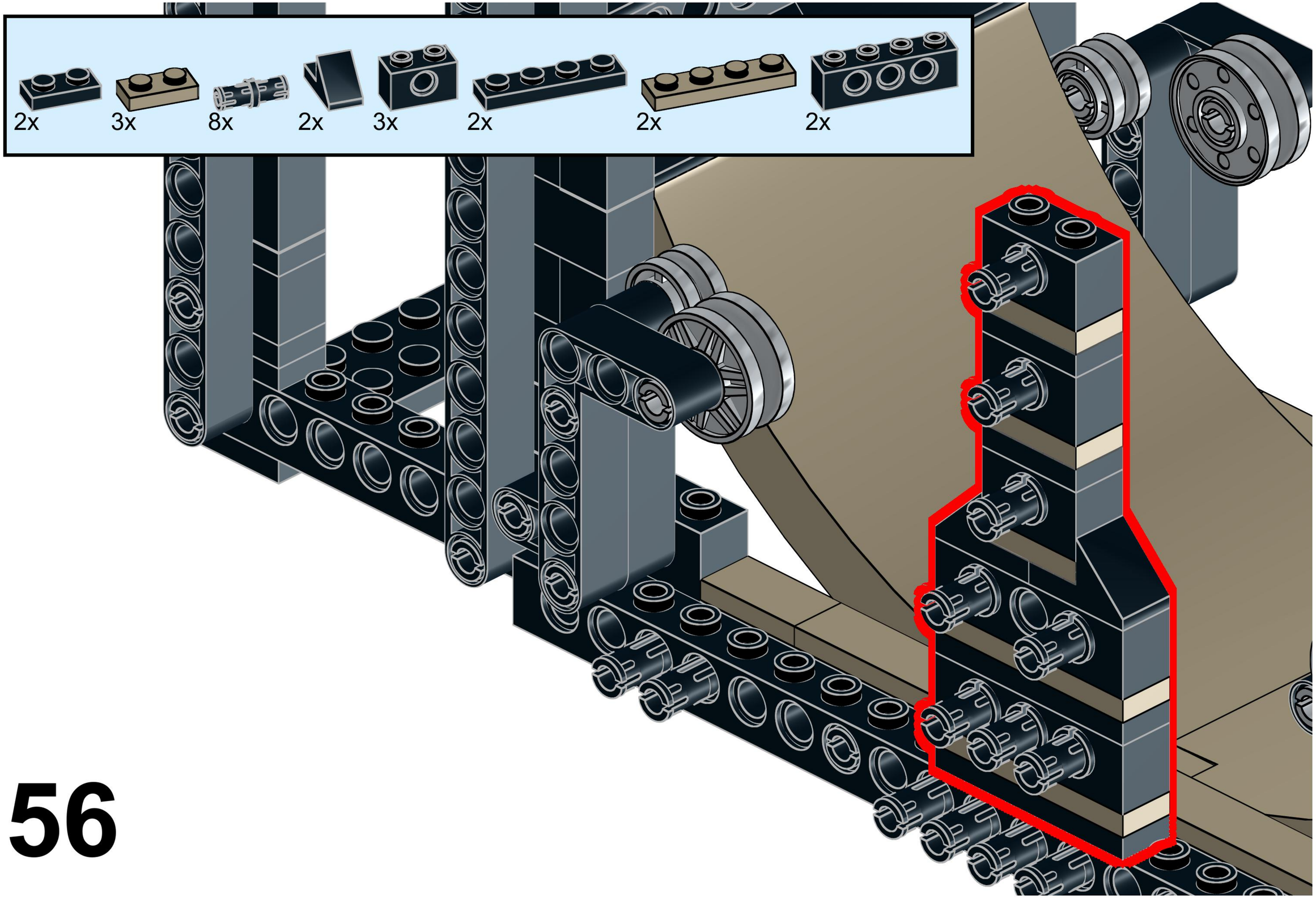

56

57

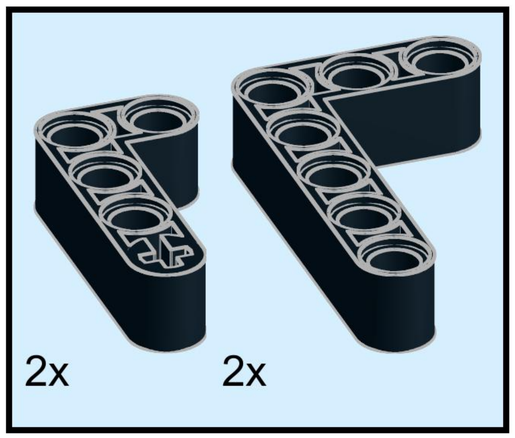

58

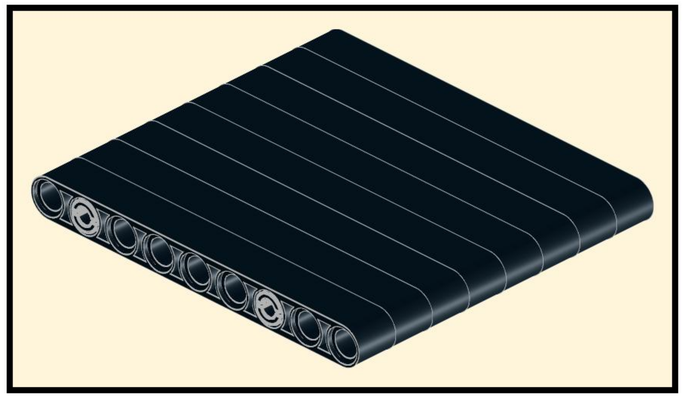

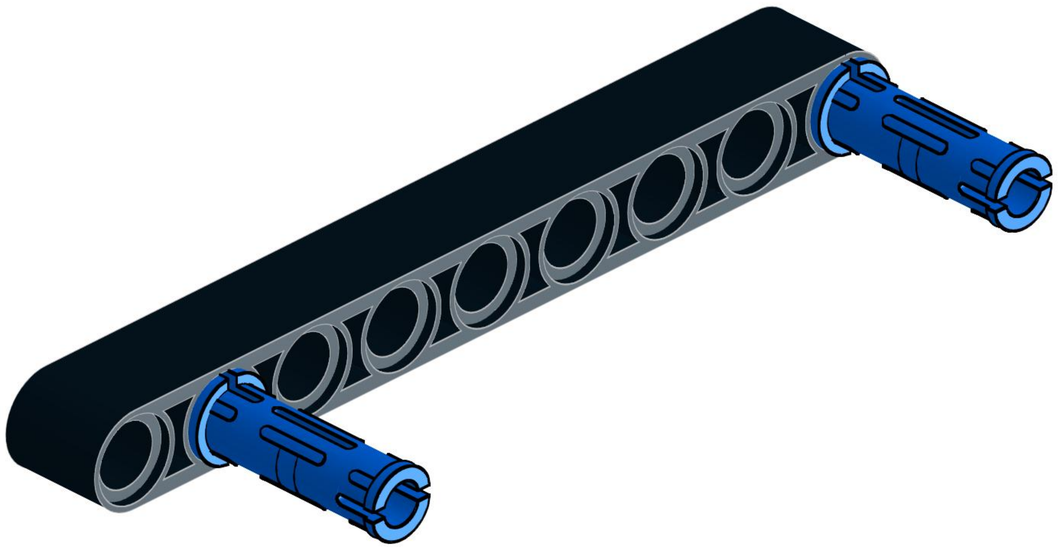

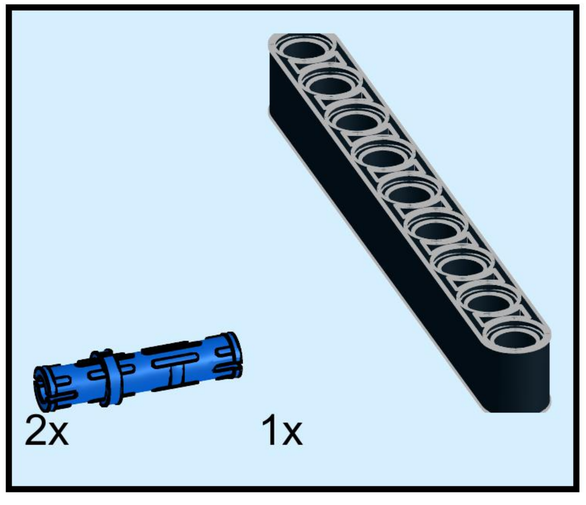

59

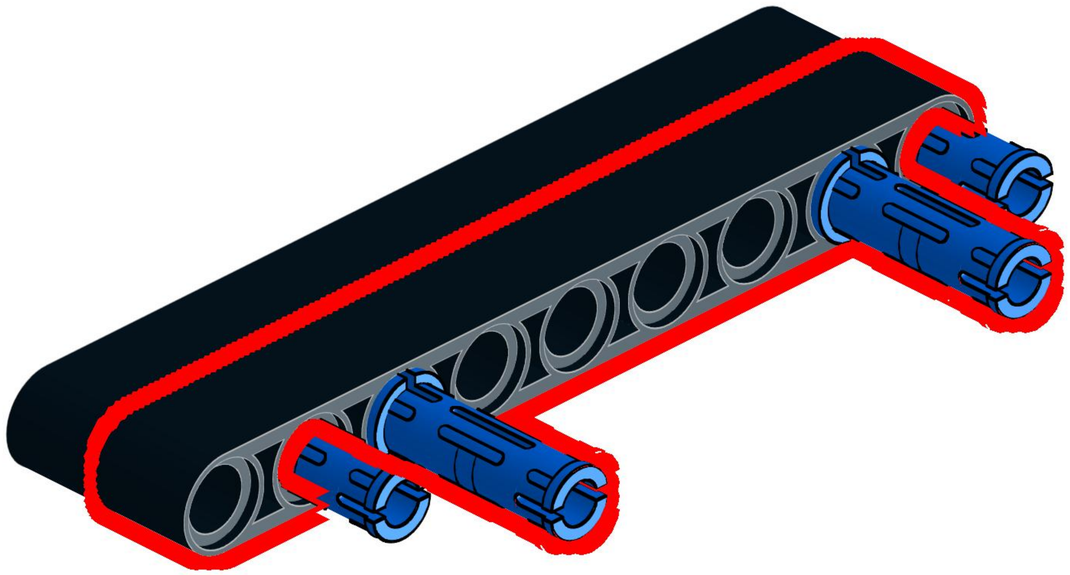

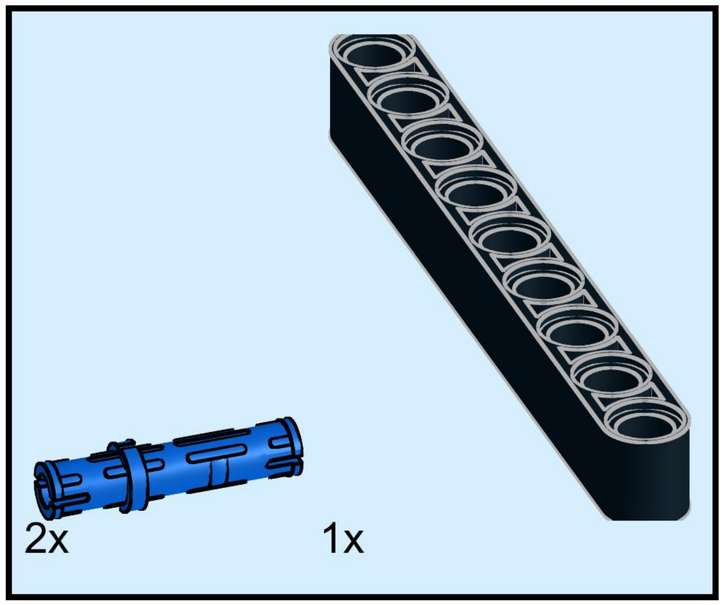

60

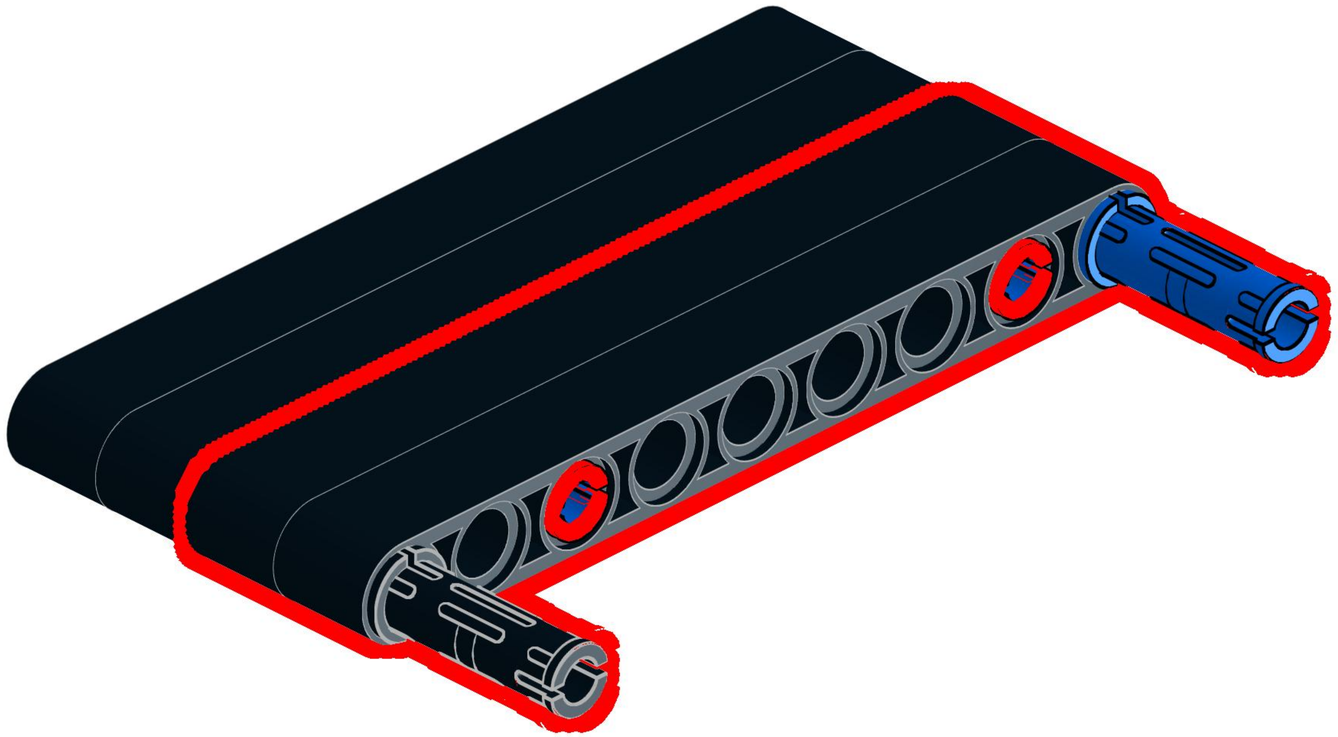

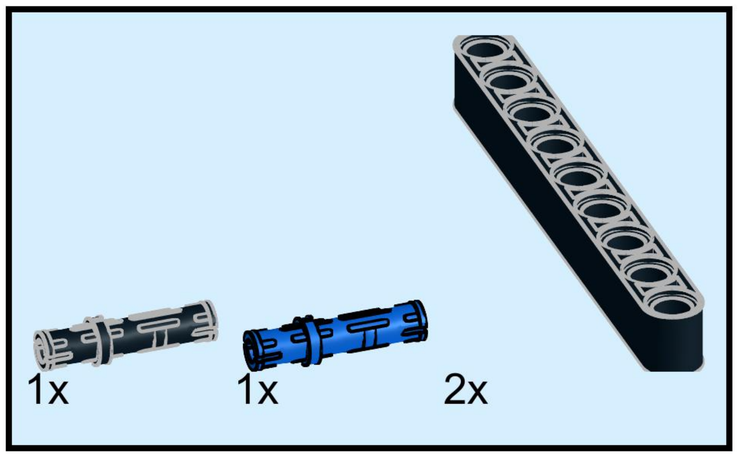

61

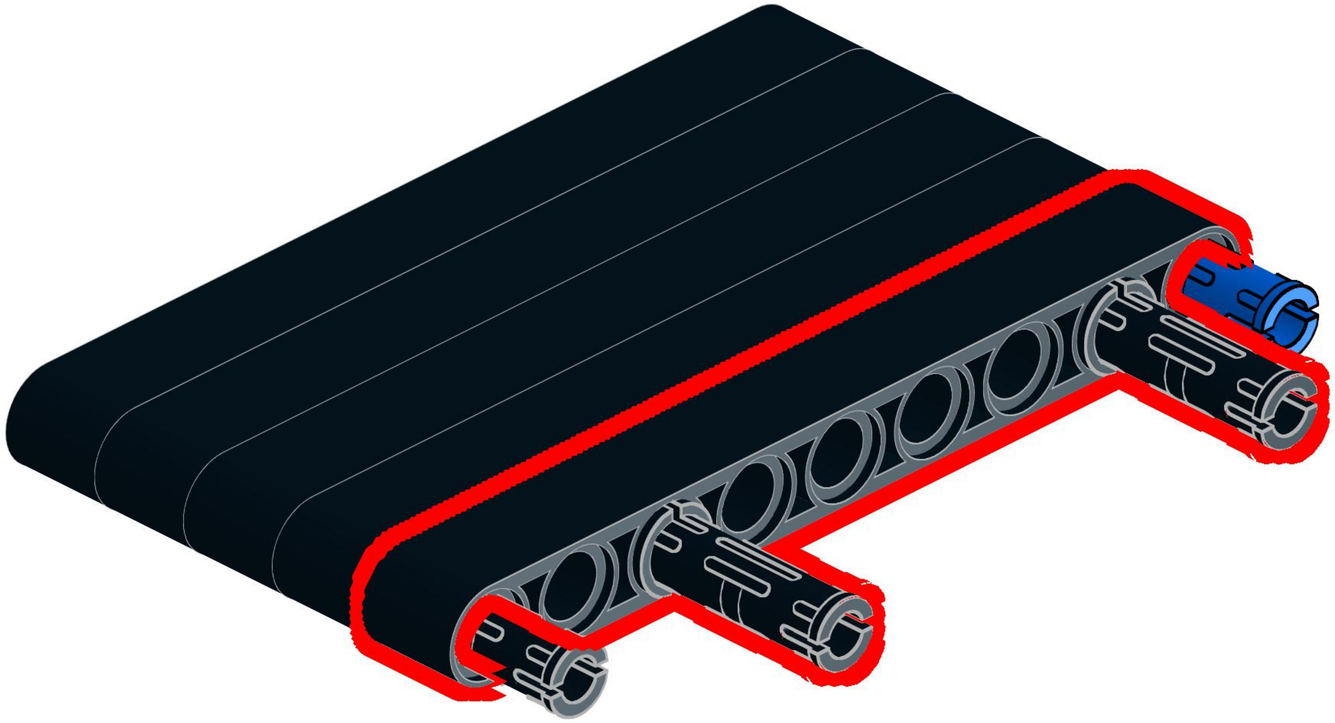

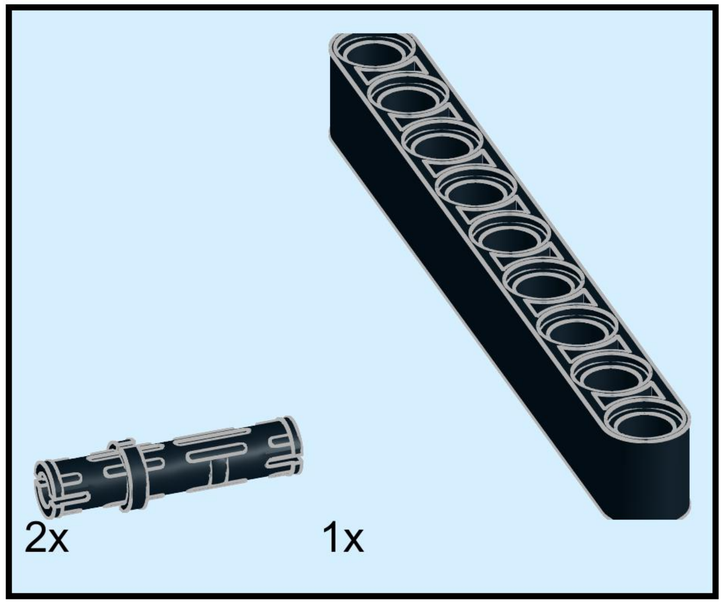

62

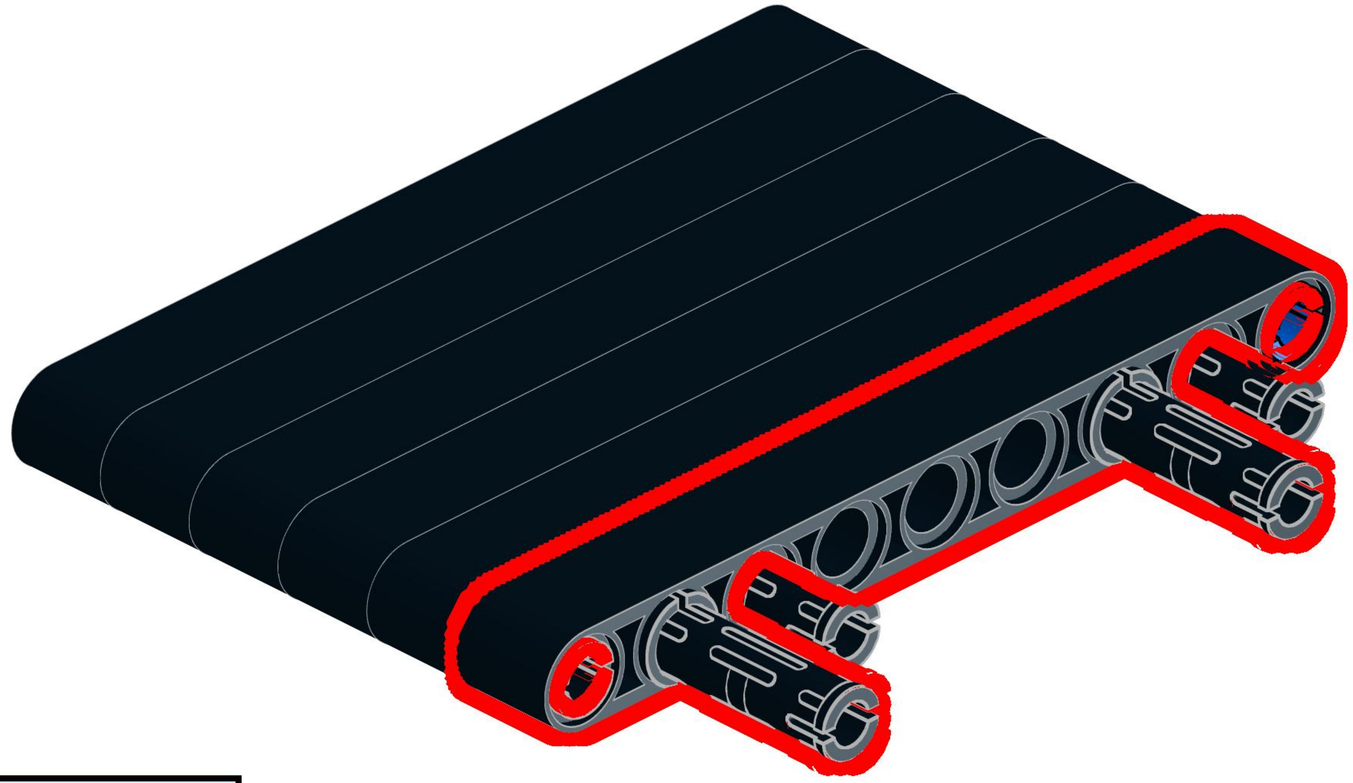

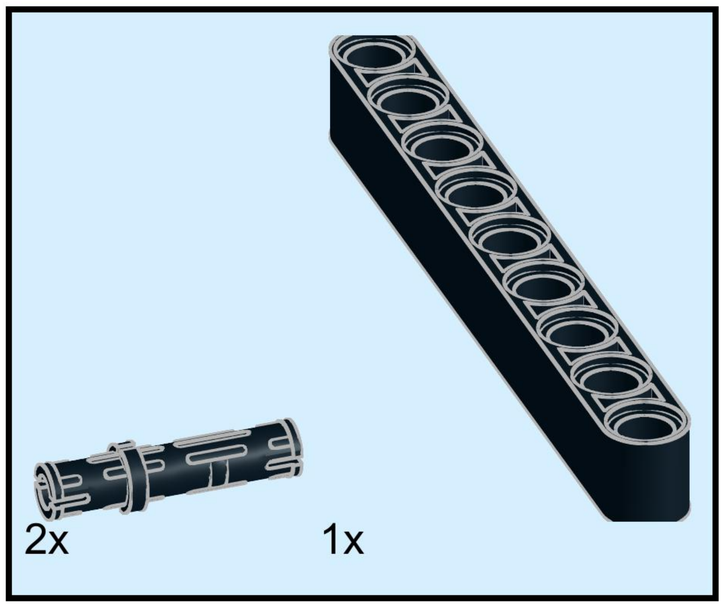

63

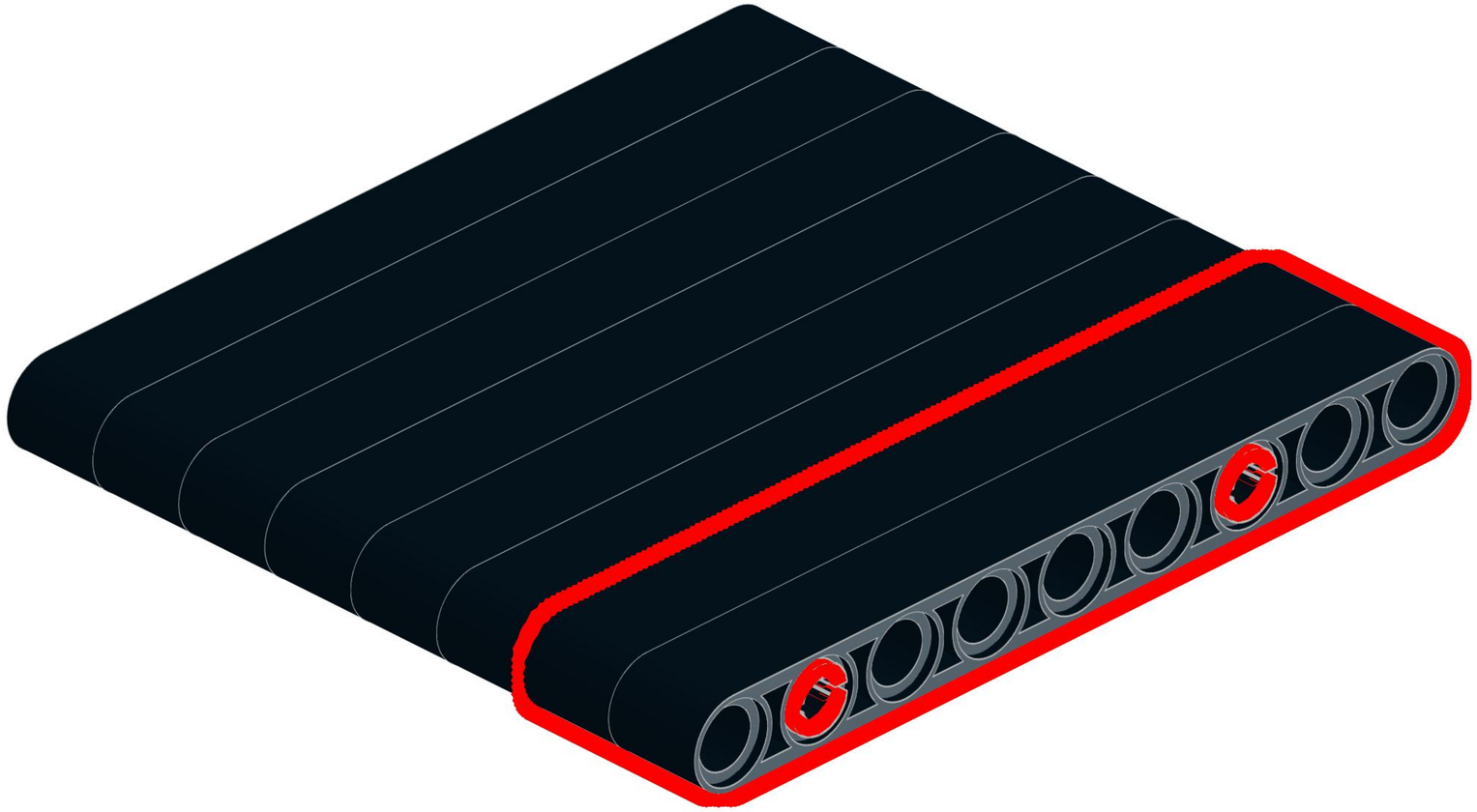

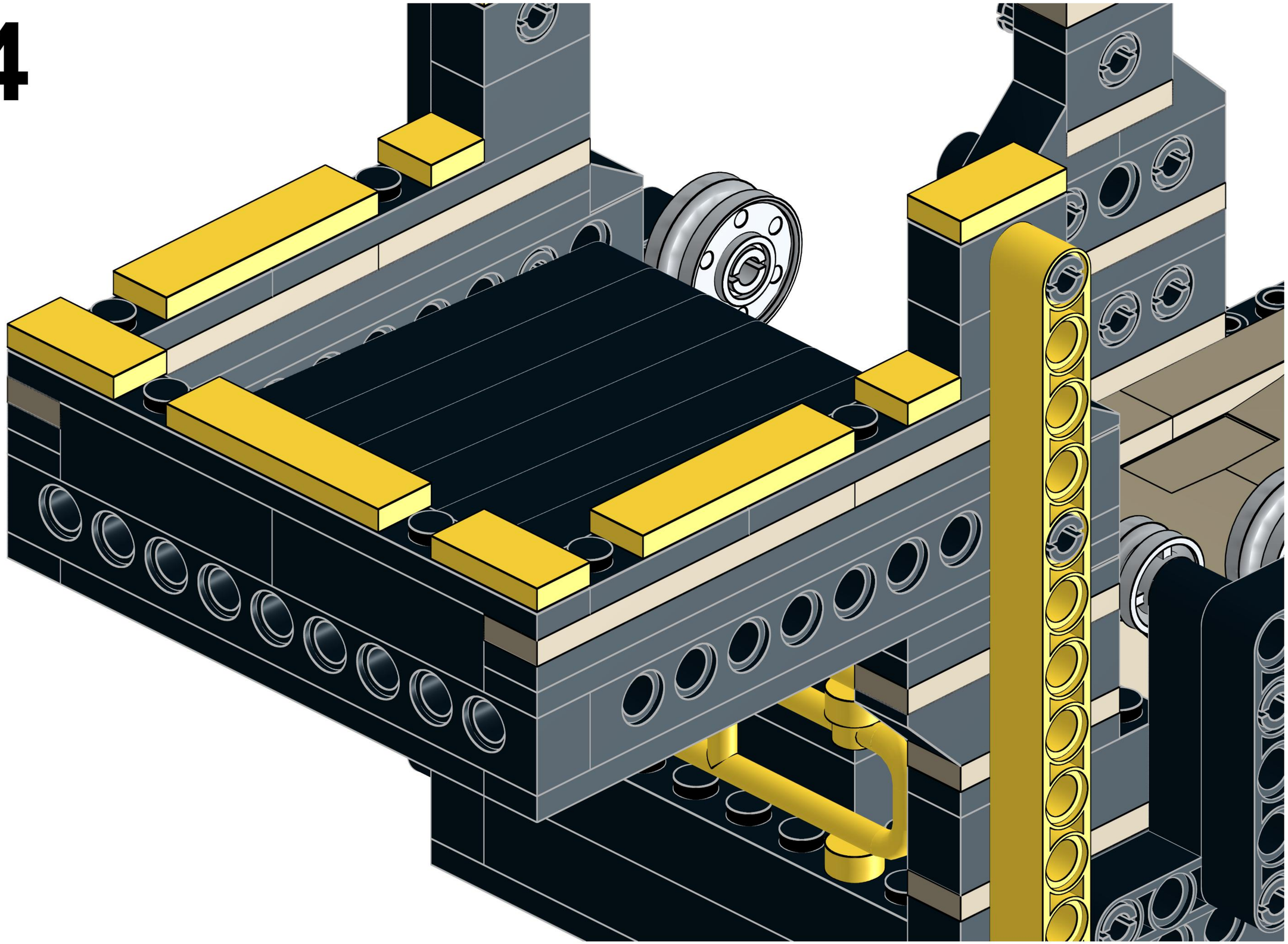

65

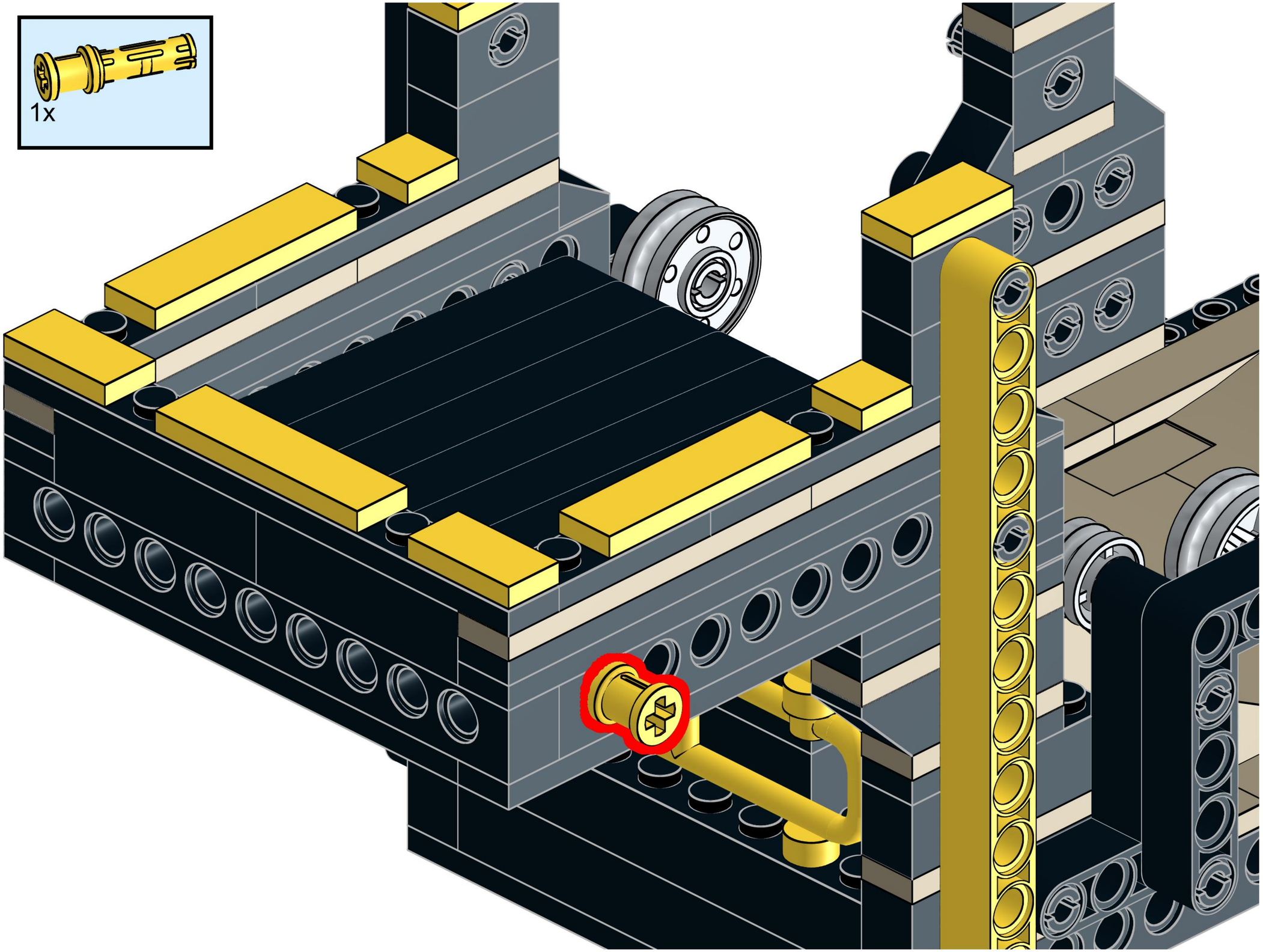

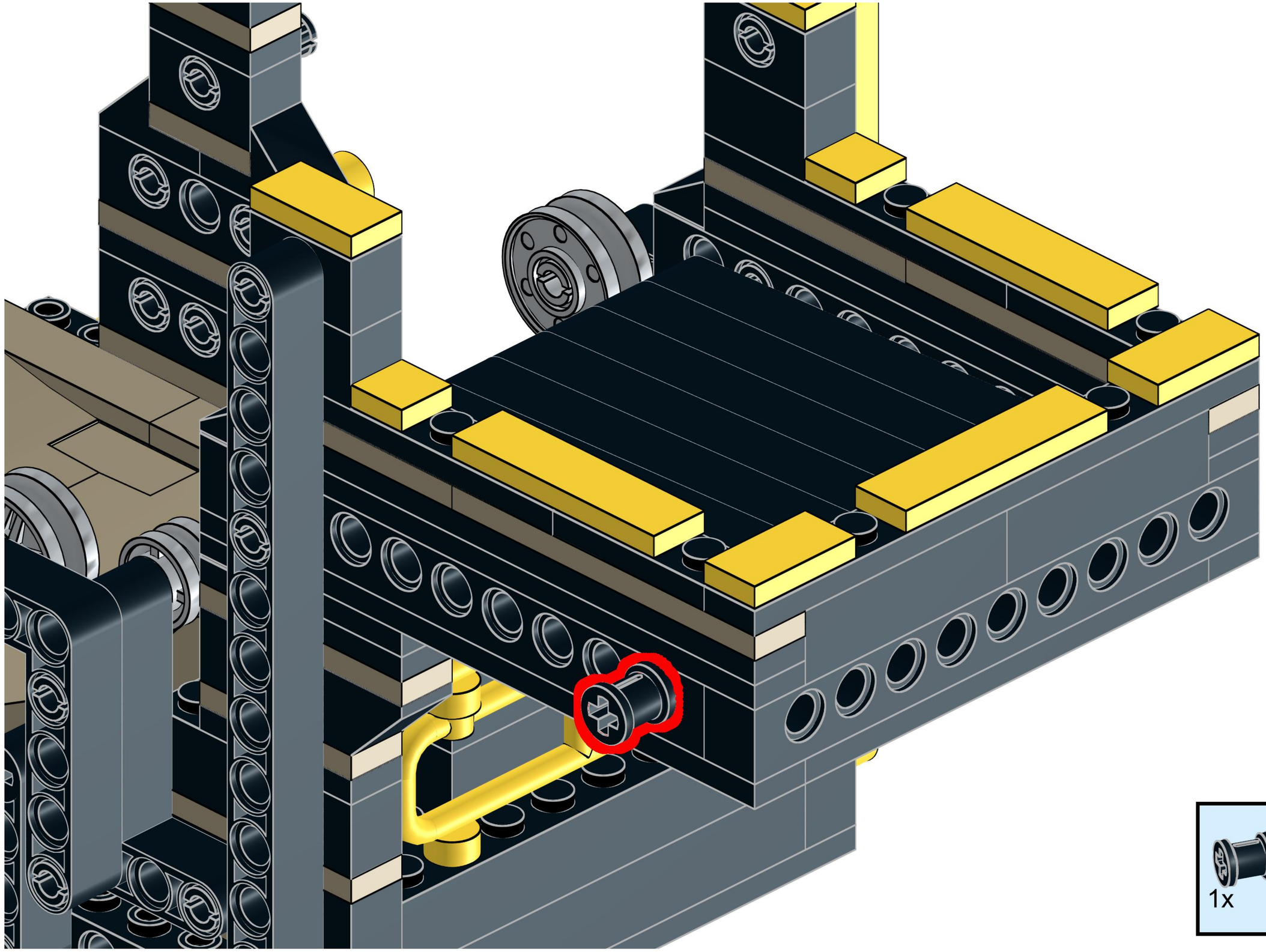

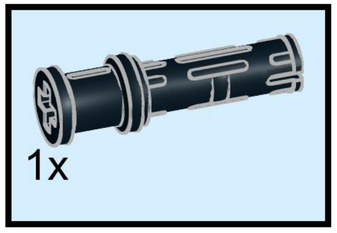
1x

67

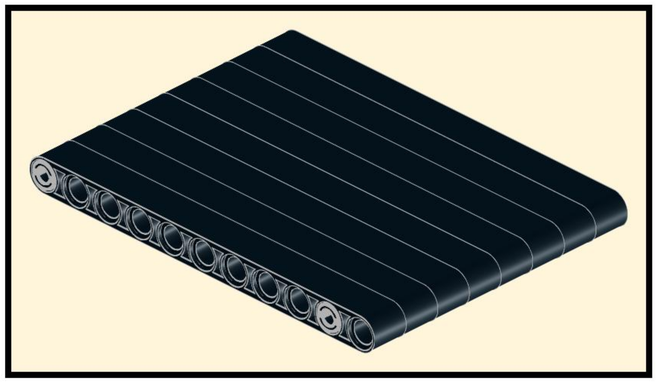

68

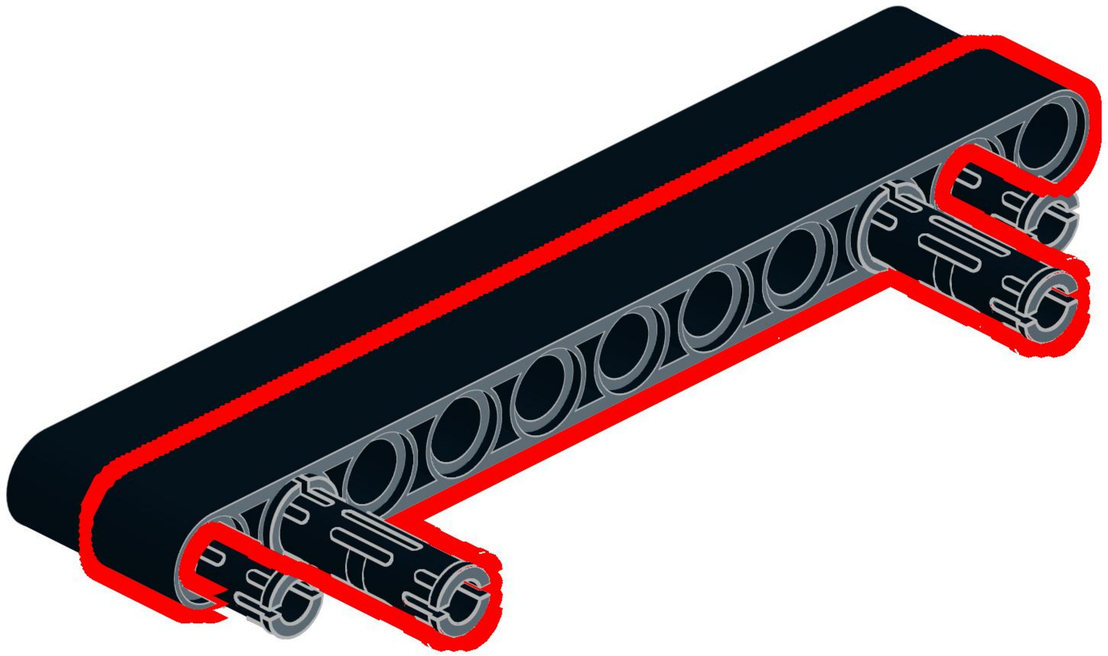

69

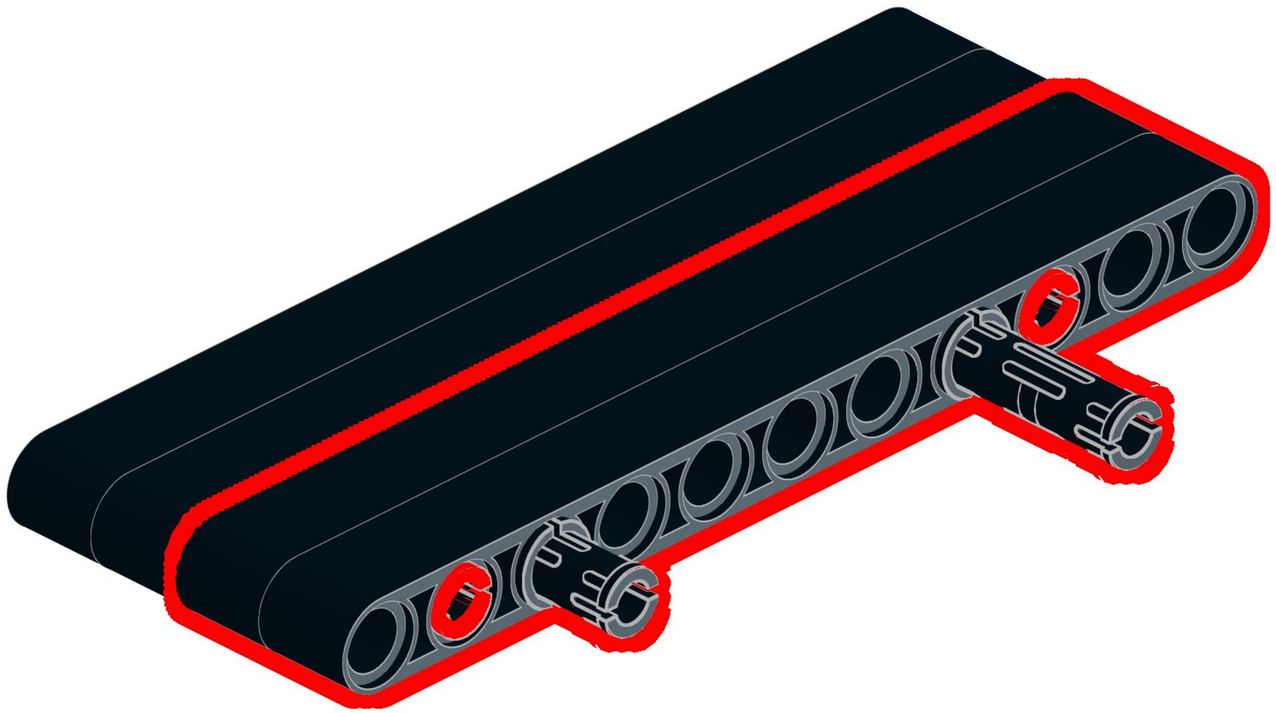

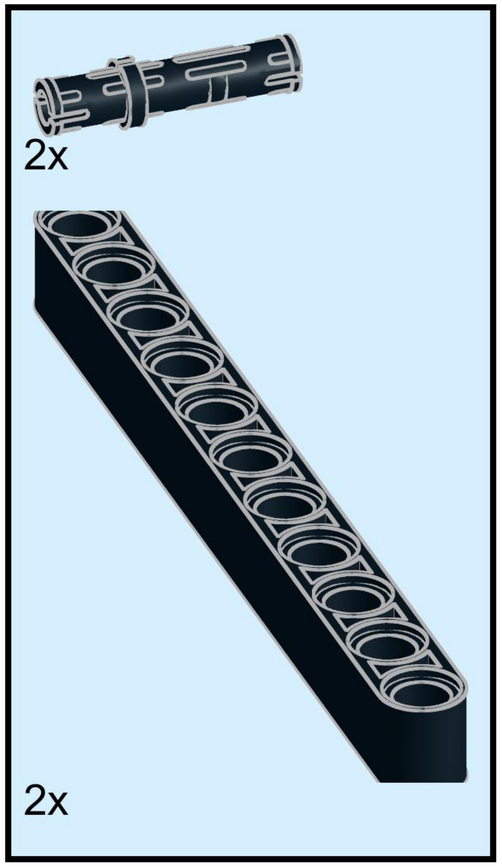

70

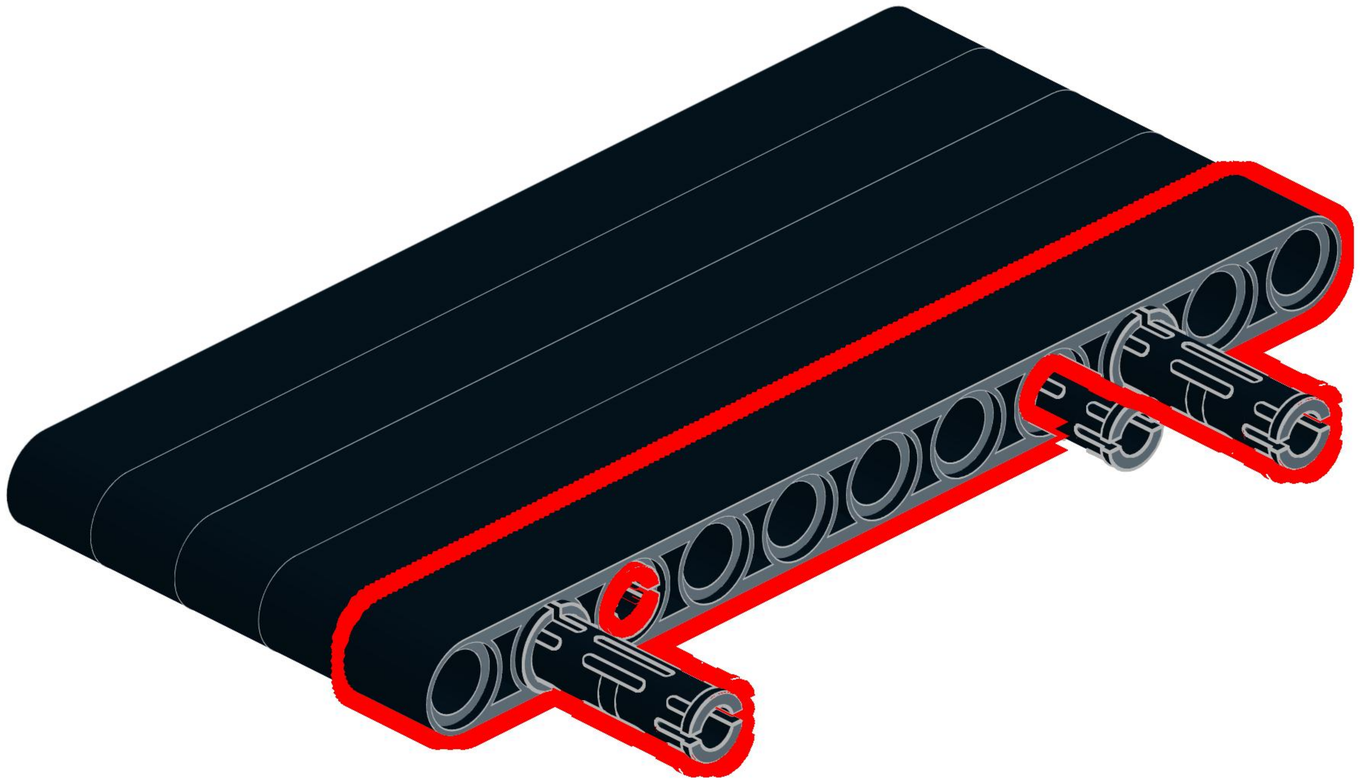

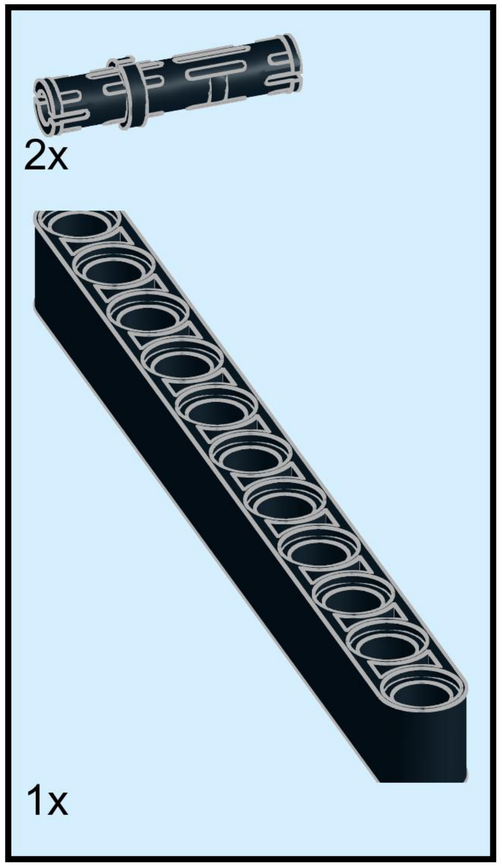

71

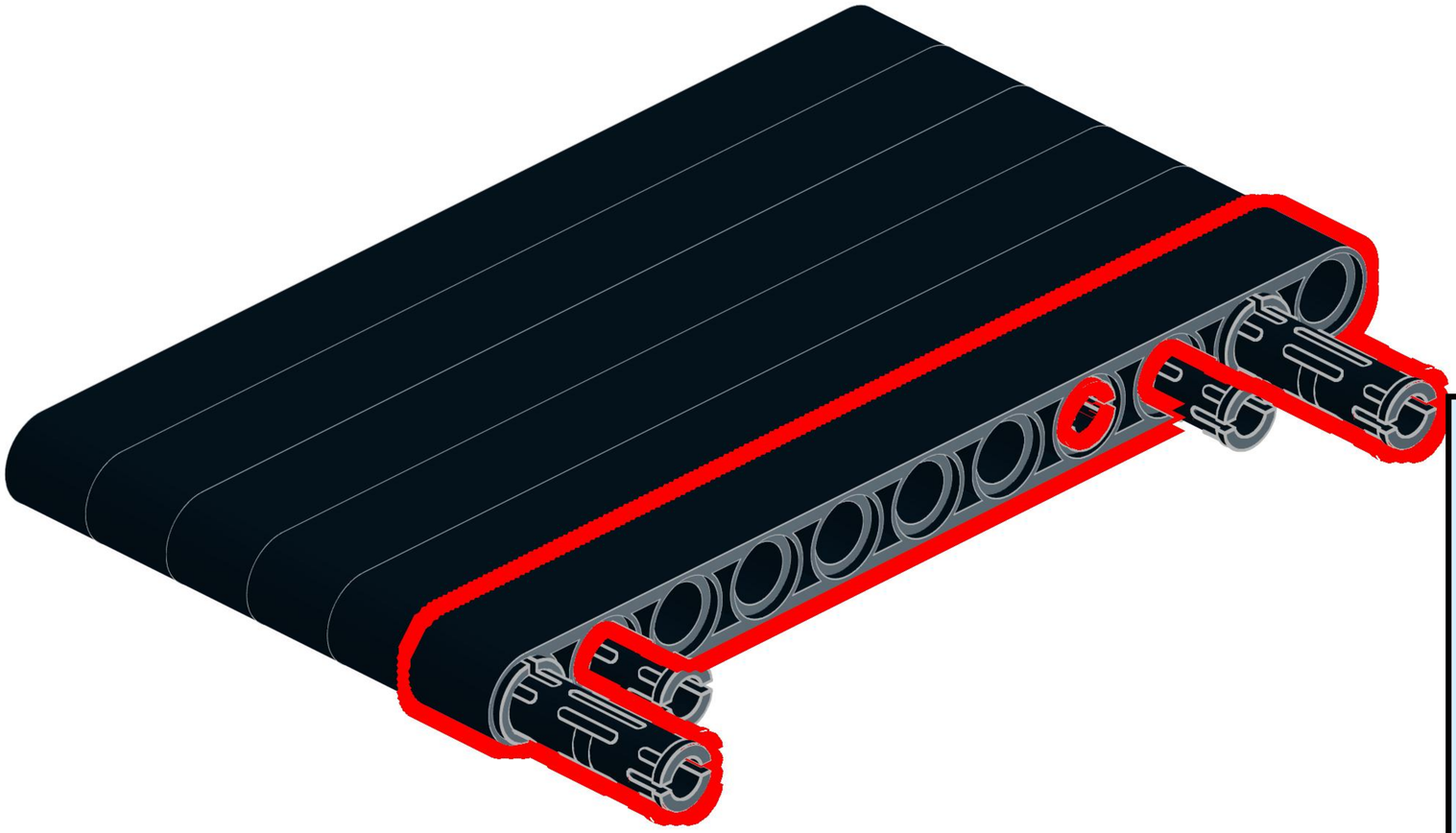

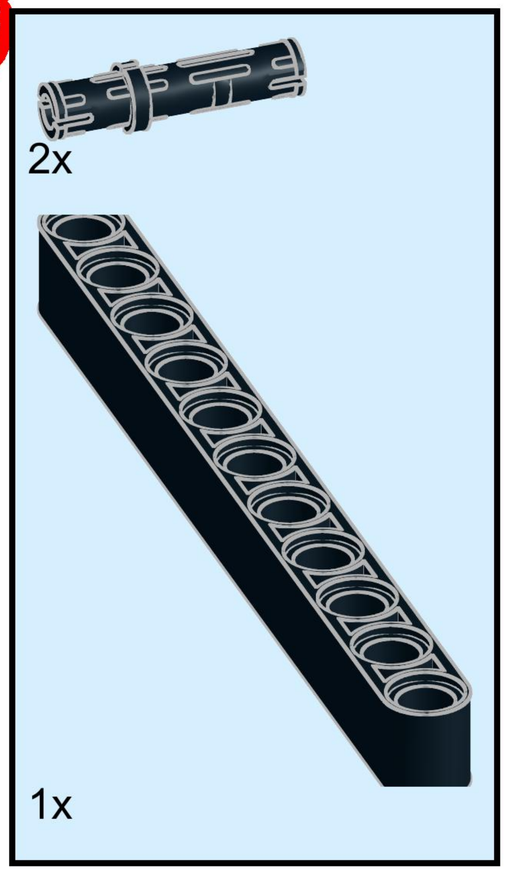

72

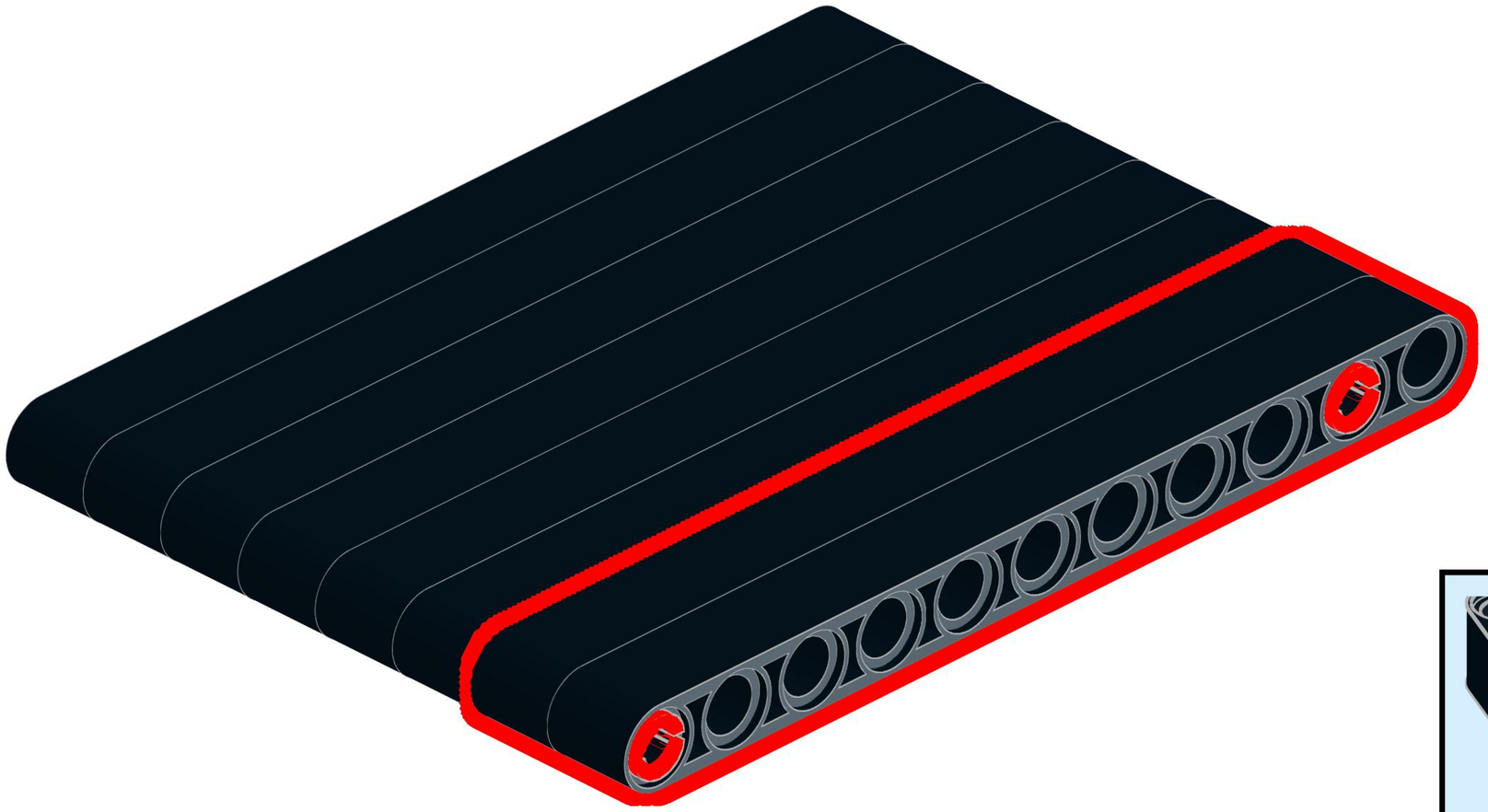

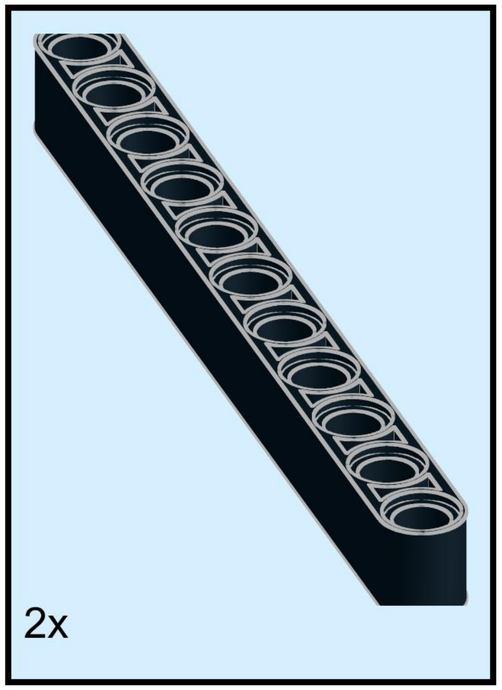

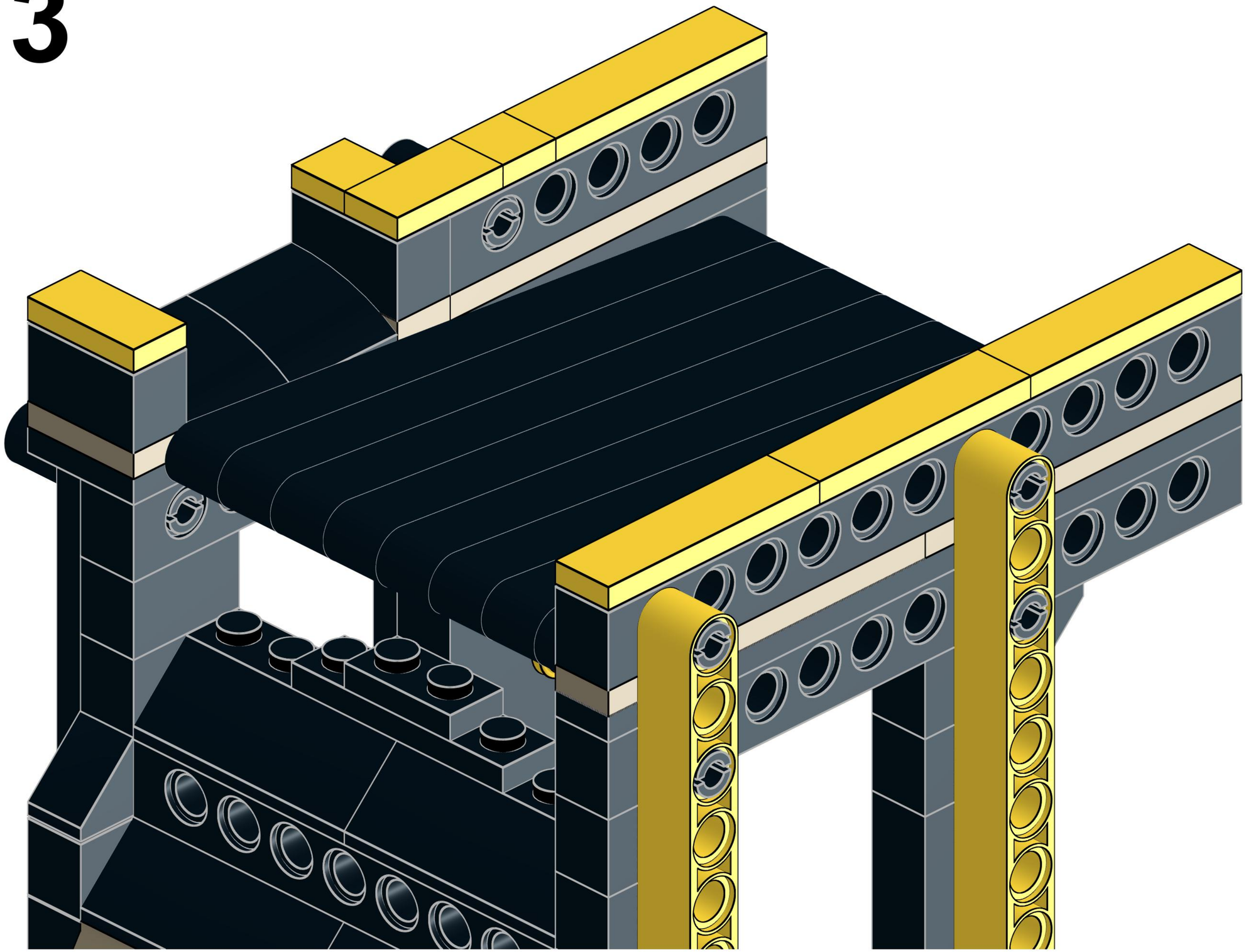

74

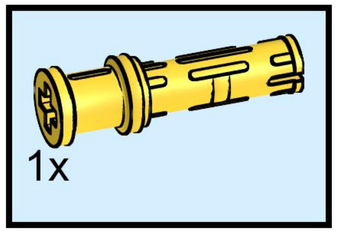

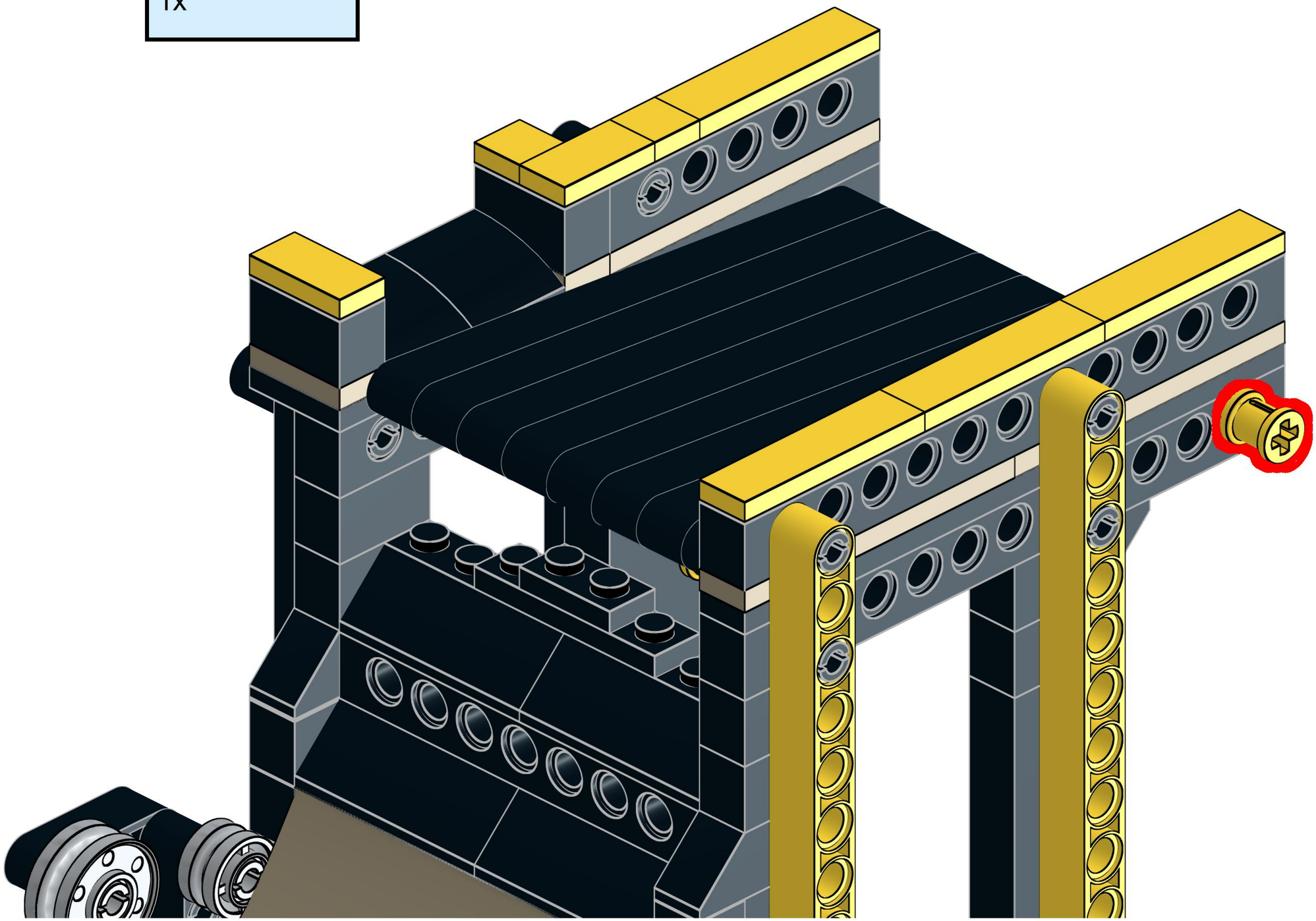

75

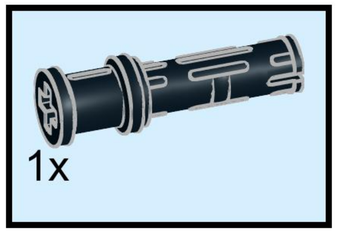

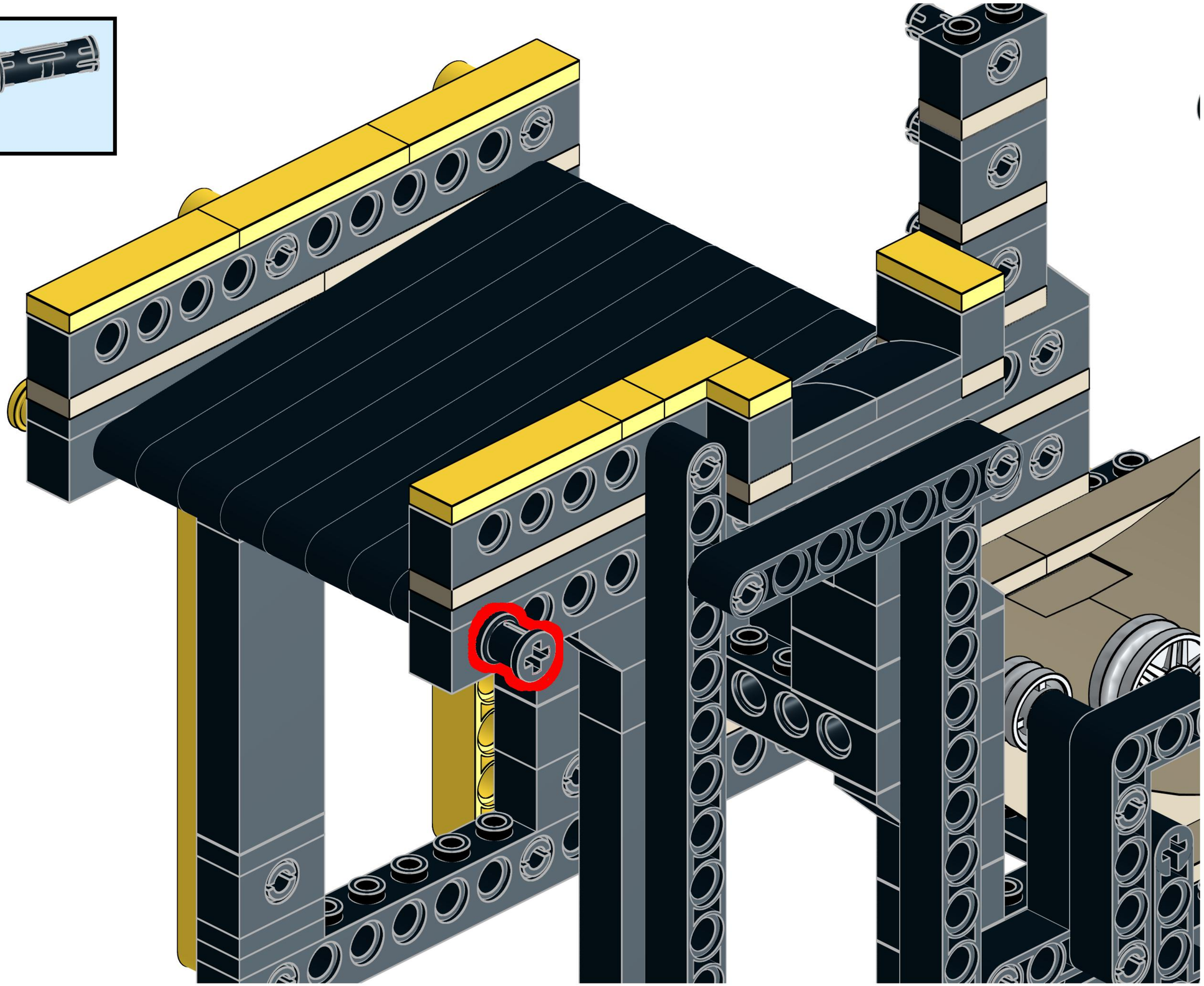

76

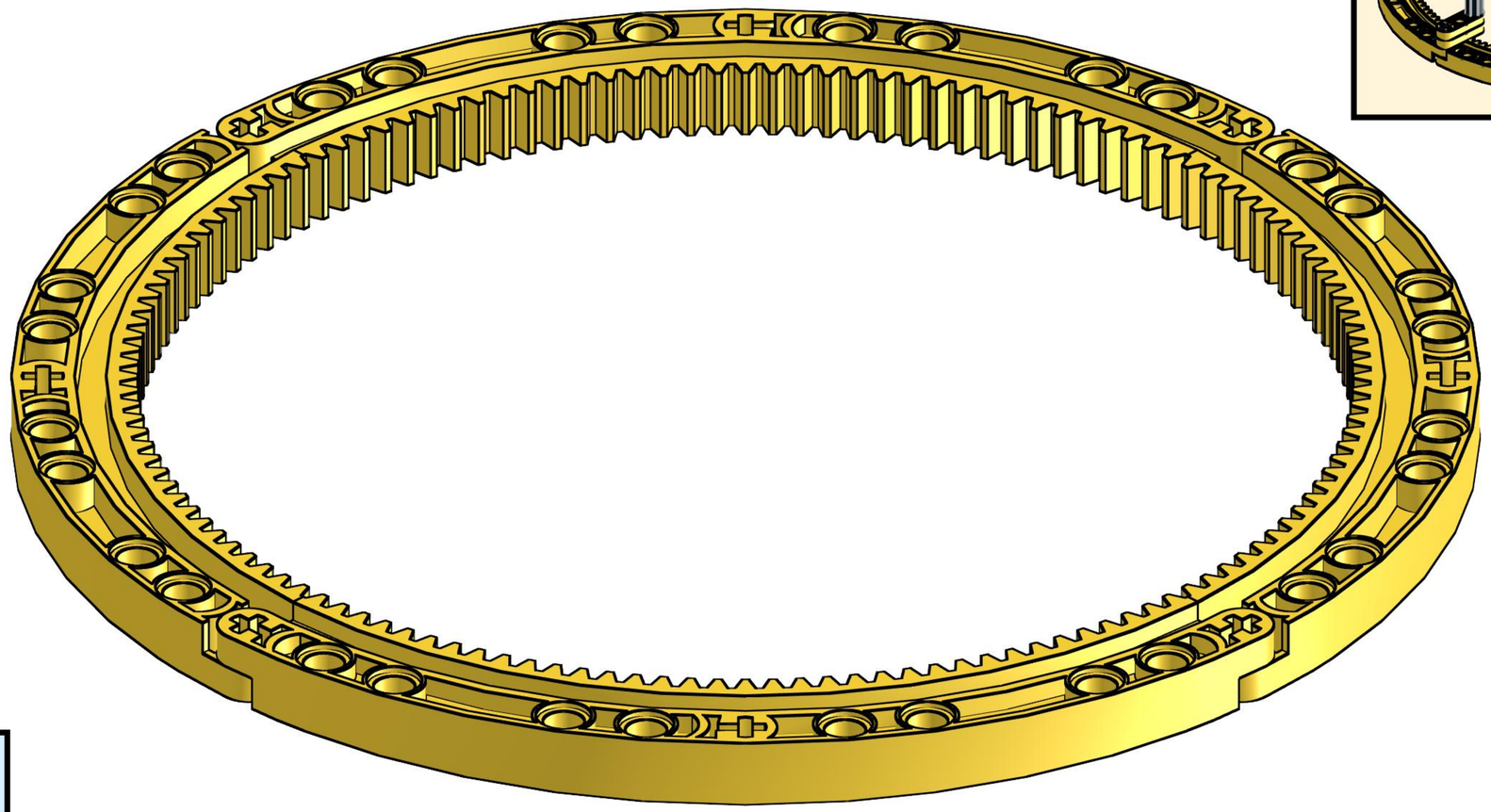

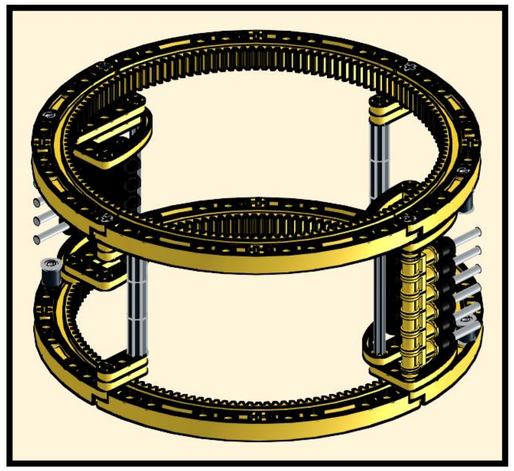

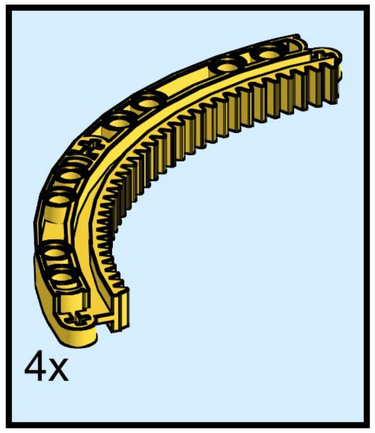

77

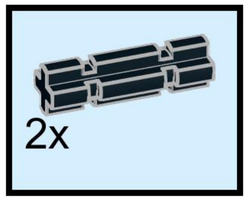

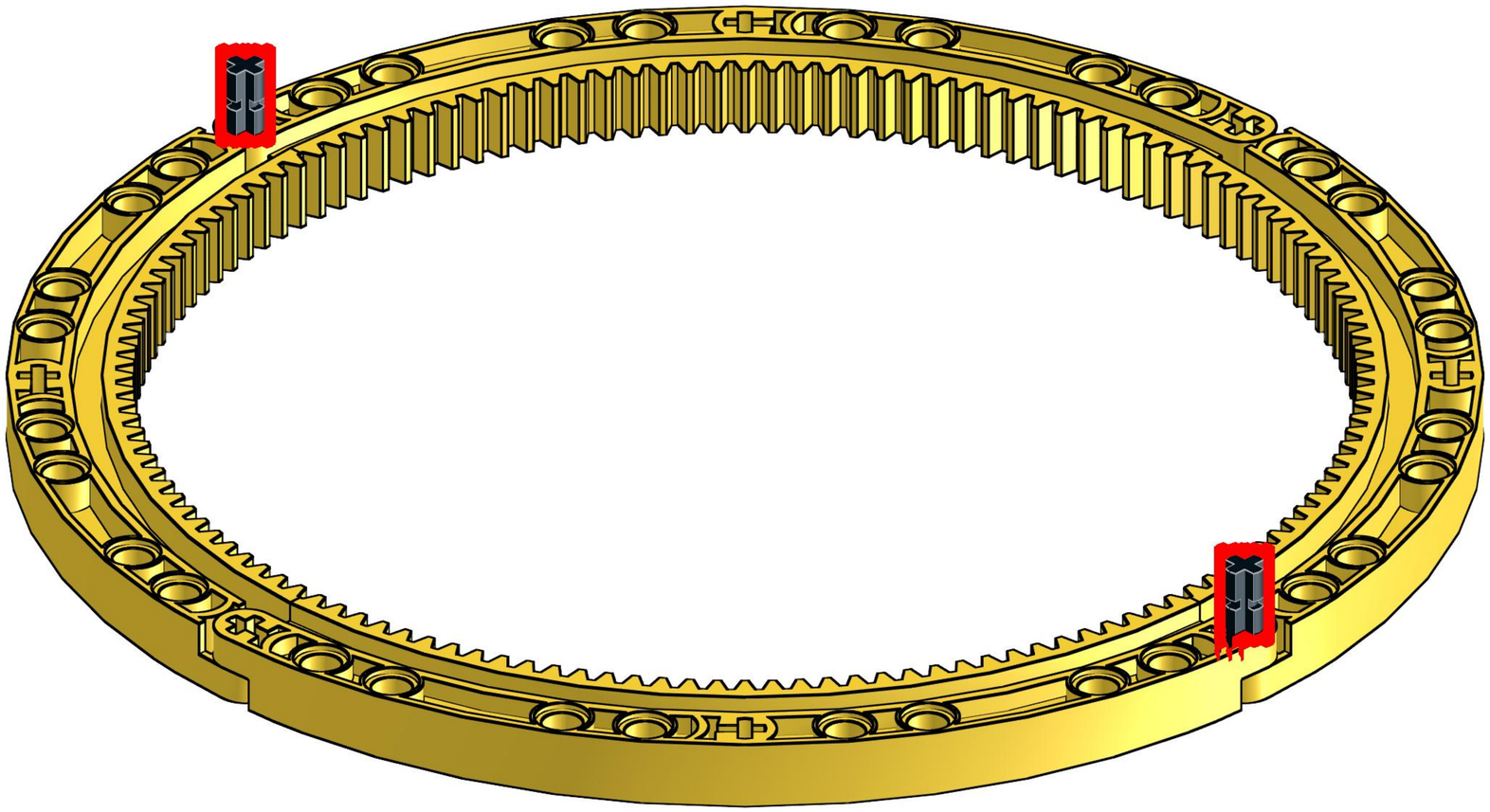

78

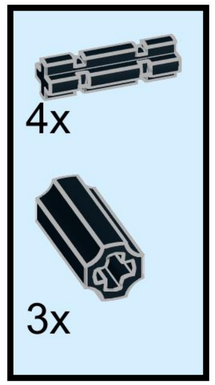

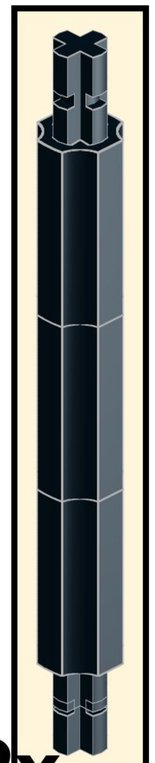

79

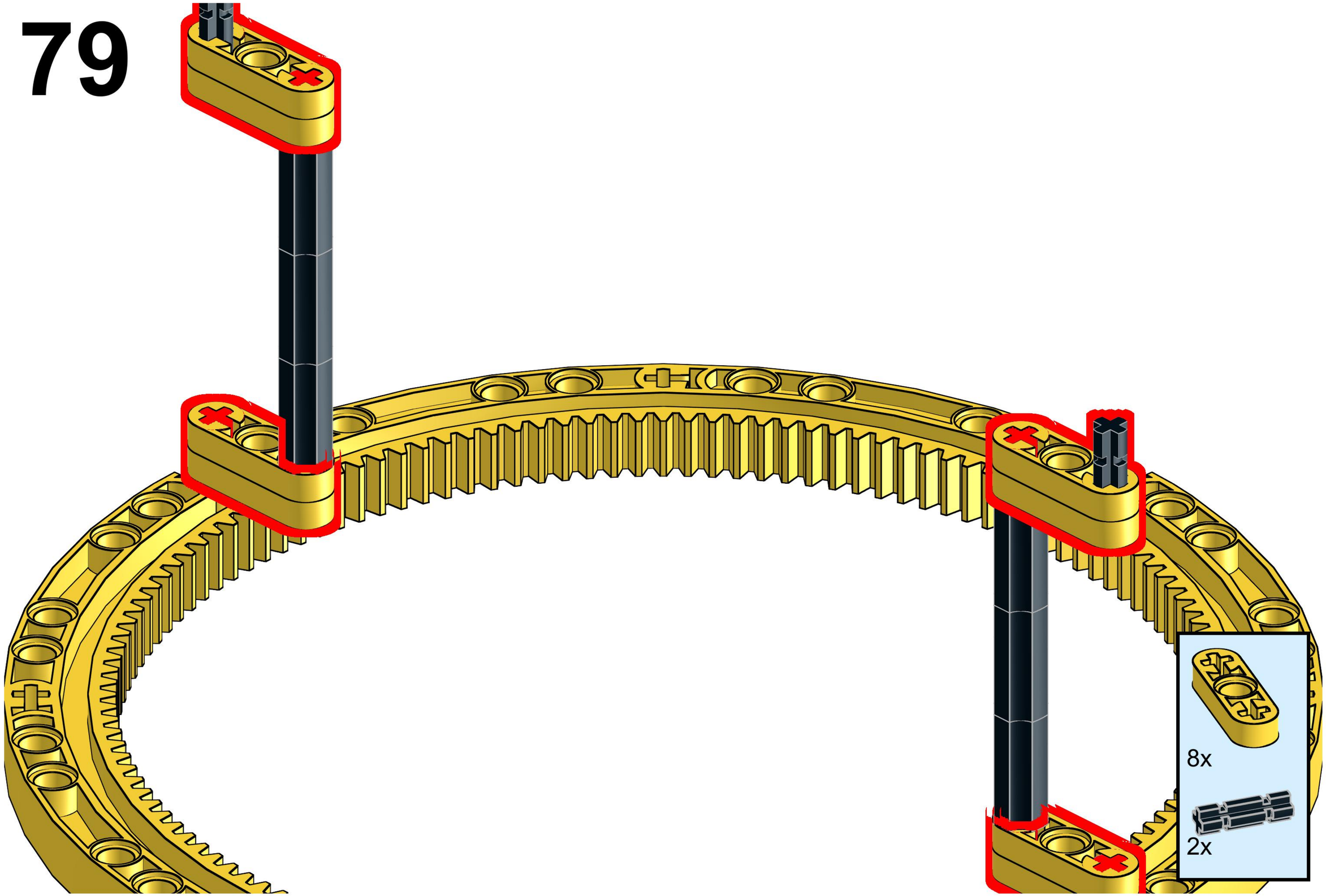

80

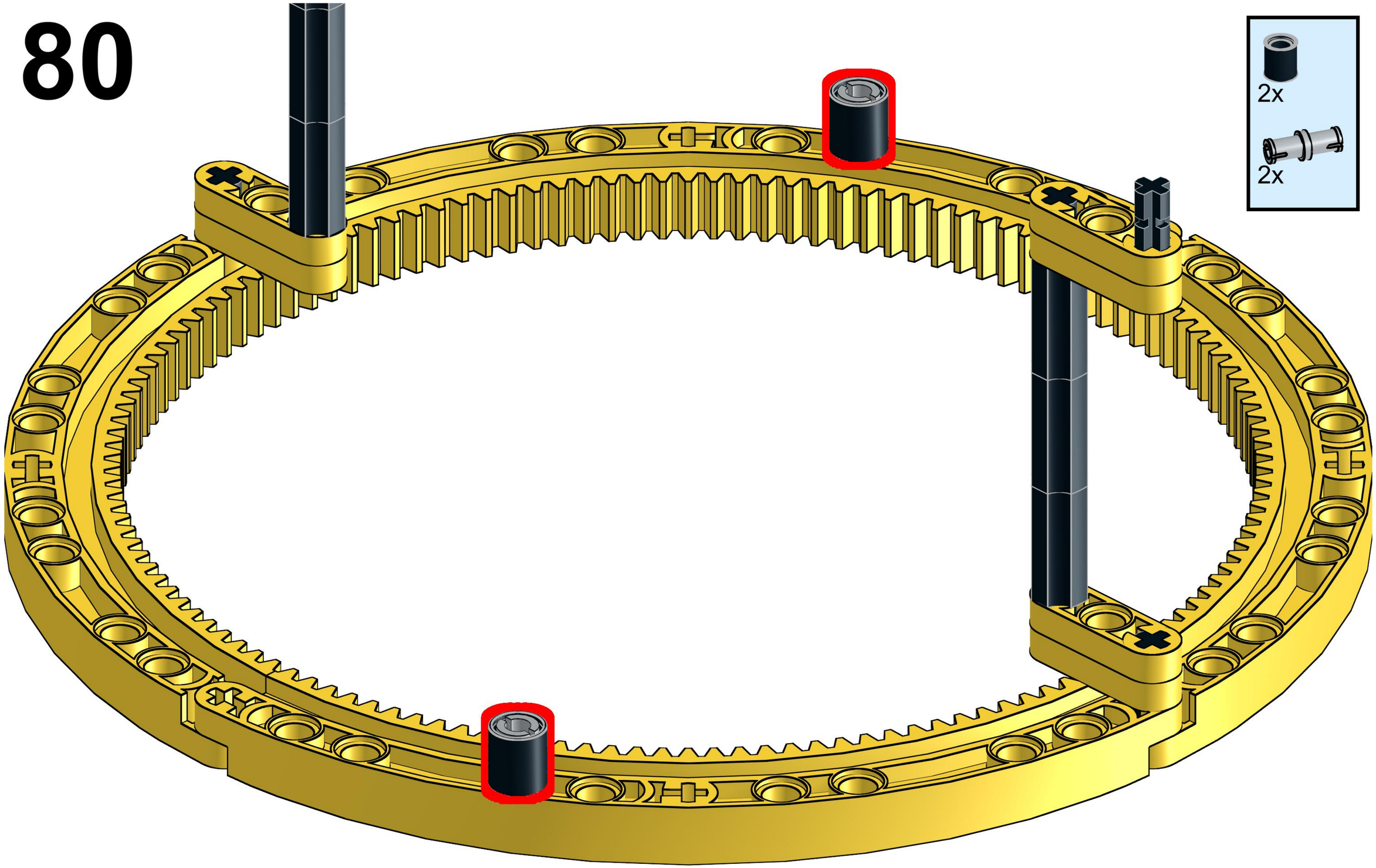

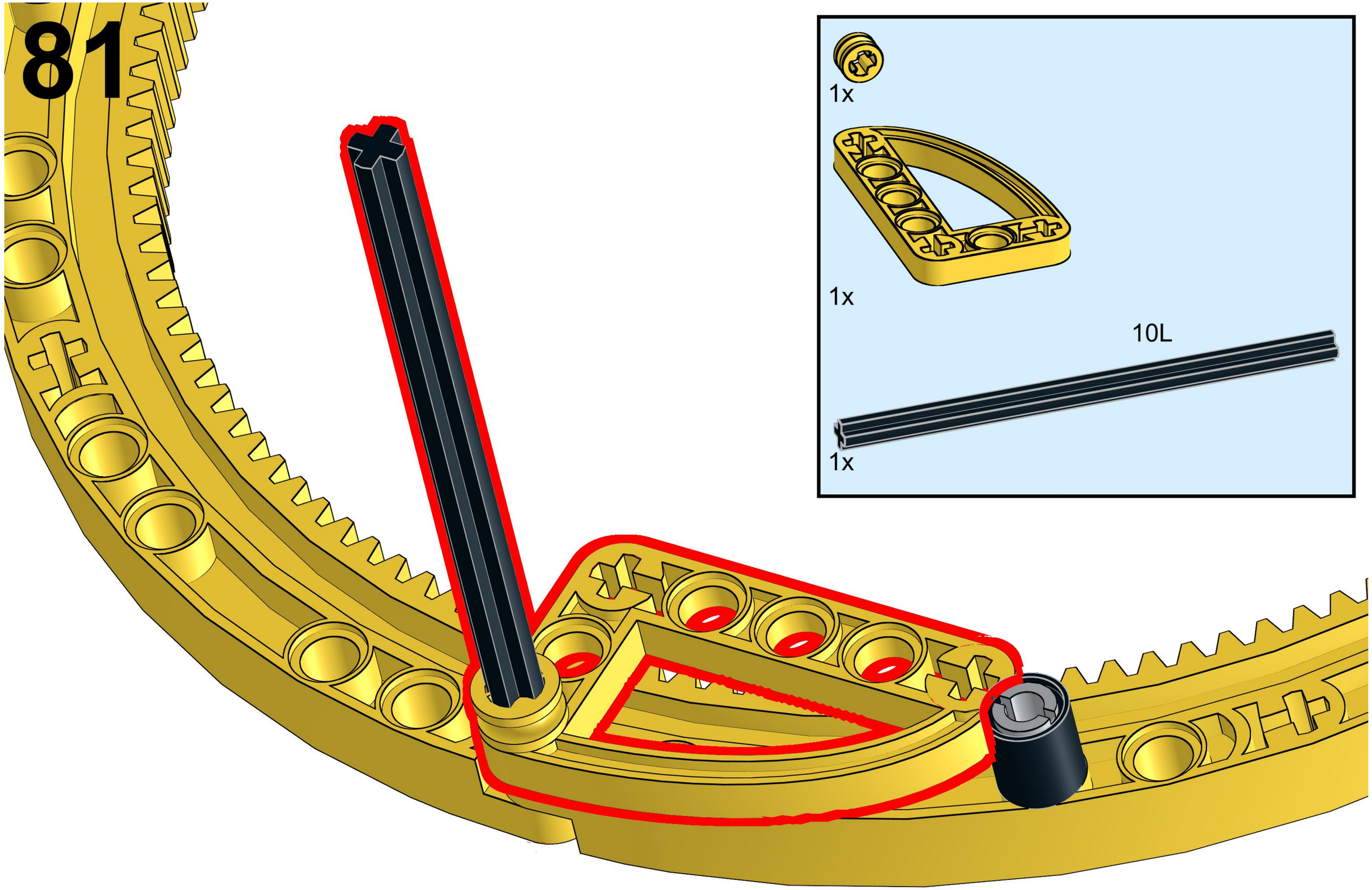
81
1x
1x
10L
1x

82

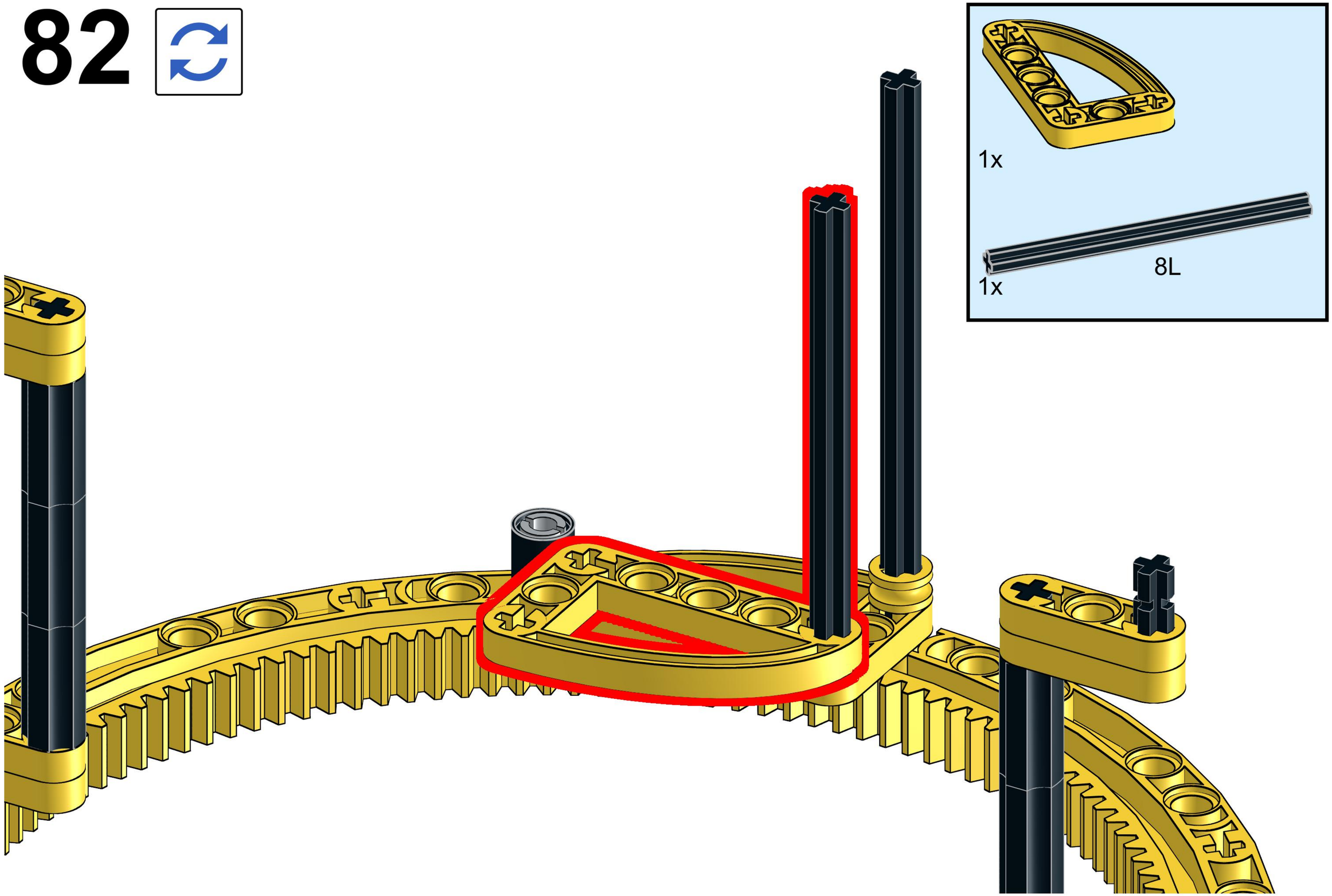

83

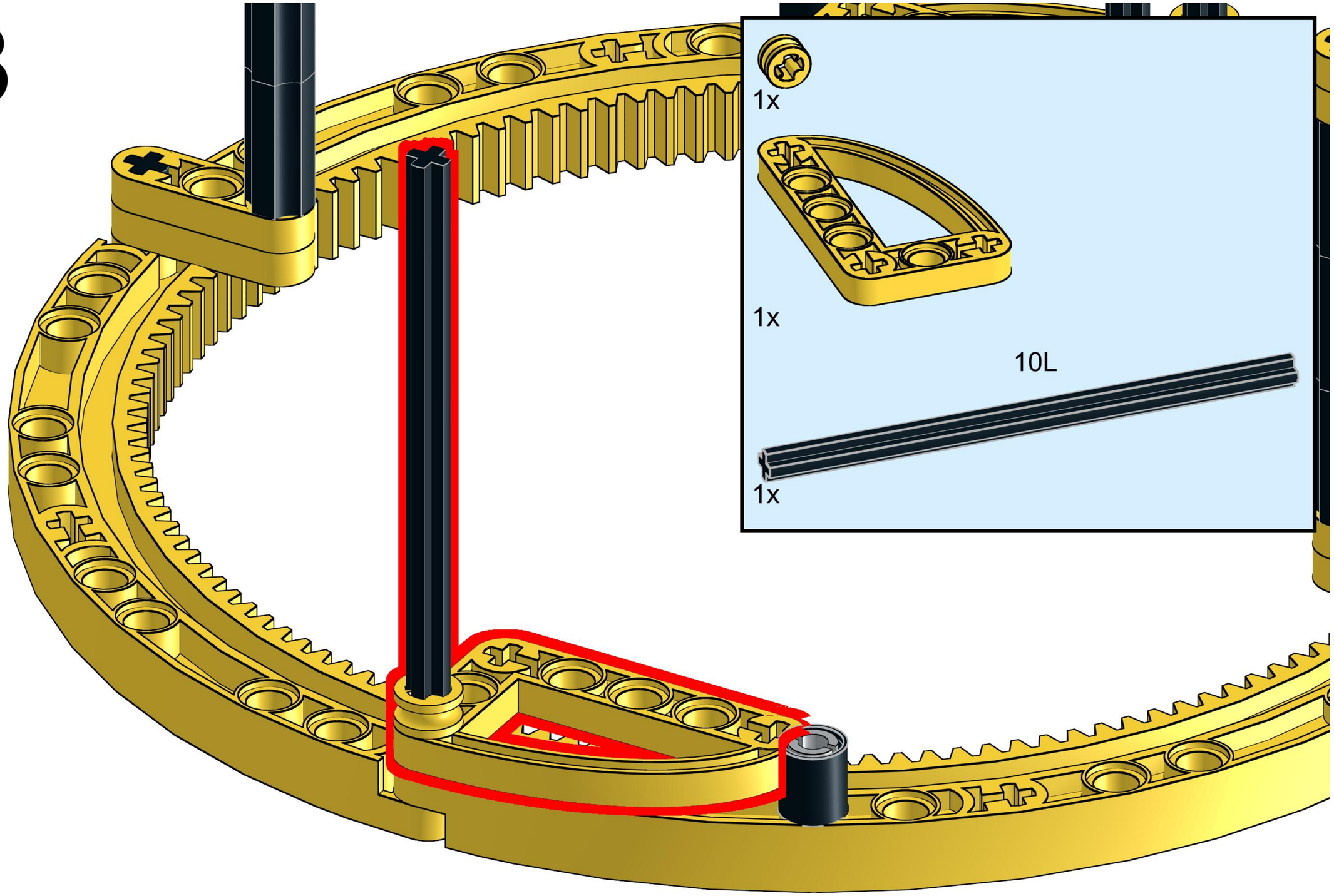

84

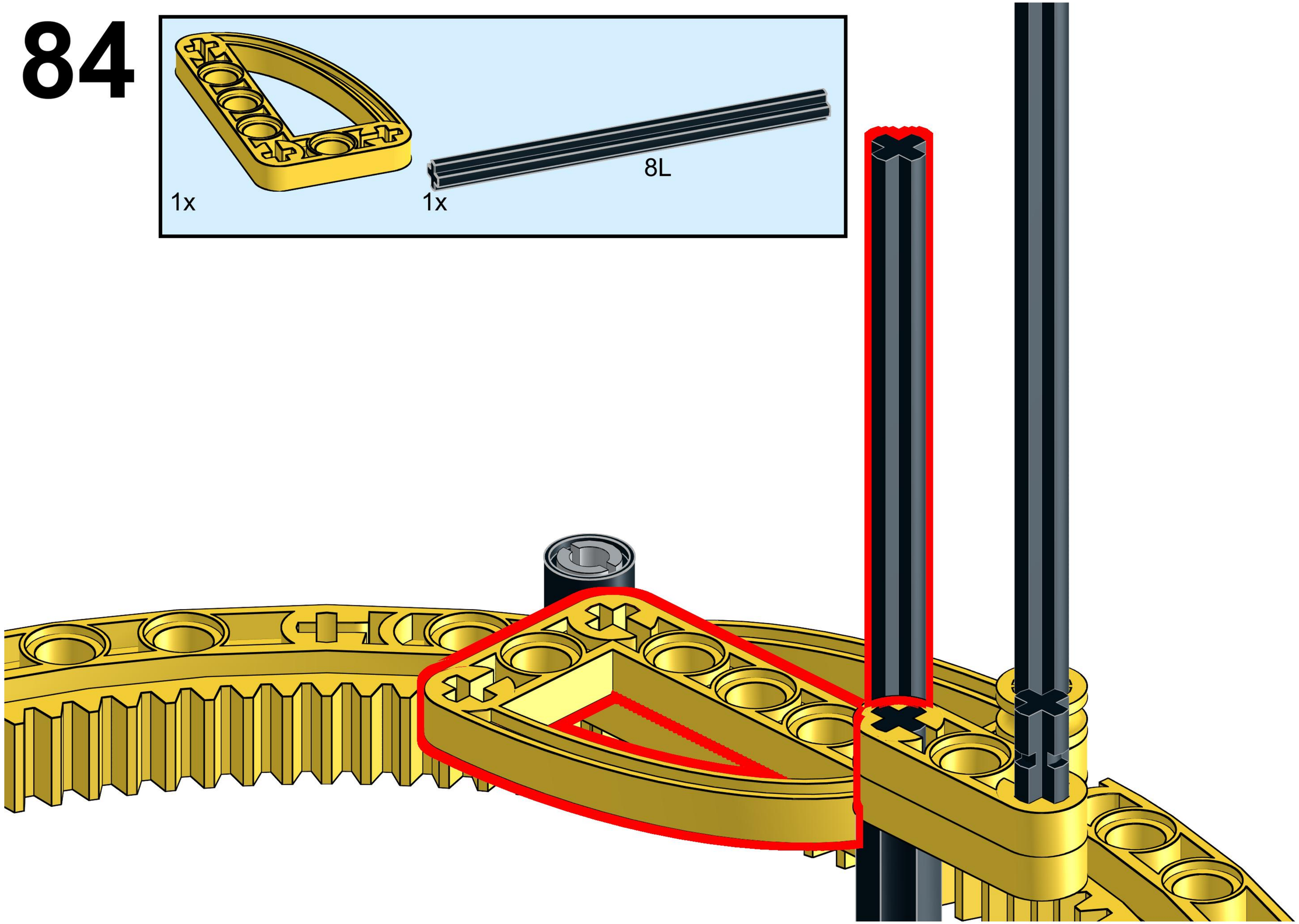

85

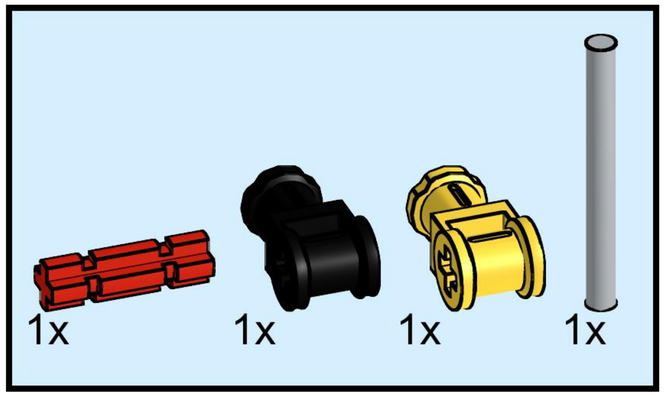

All grey bars are 4L

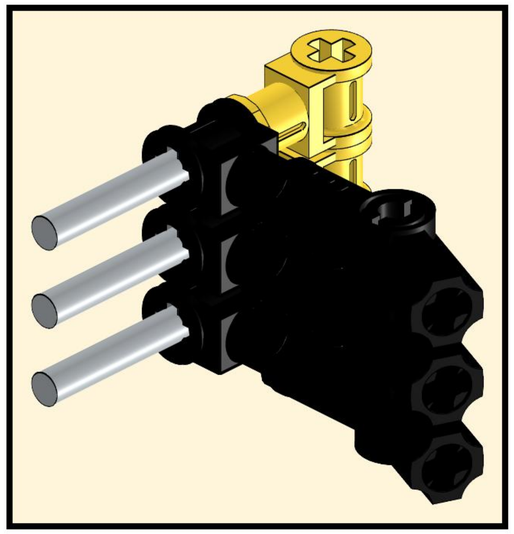

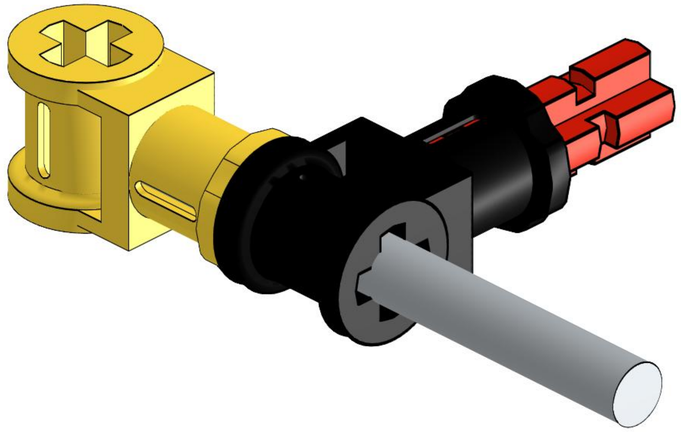

86

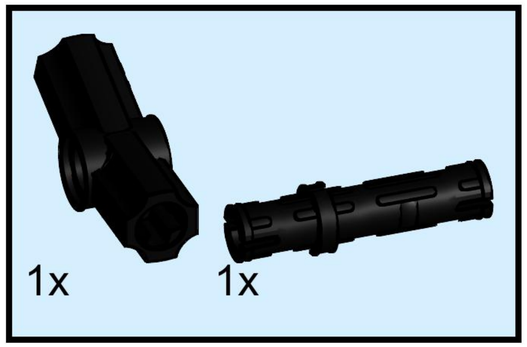

All angled connectors are #3.

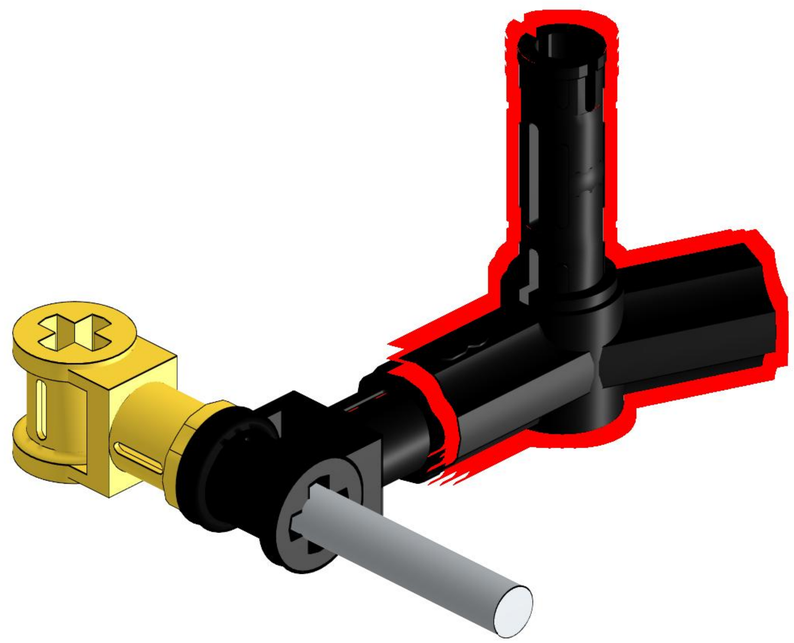

87

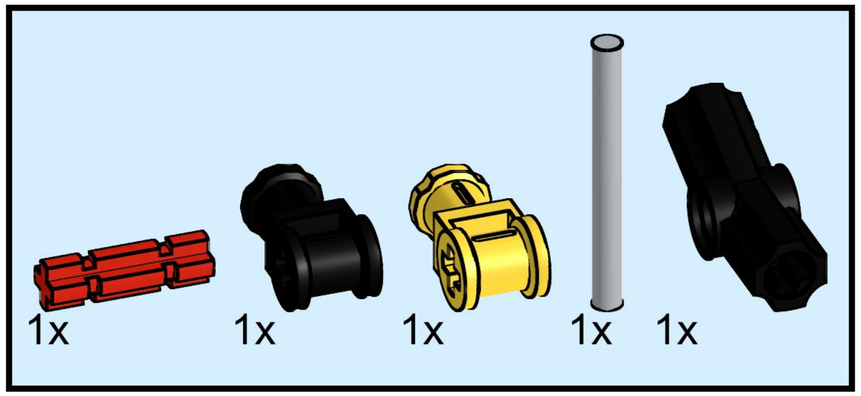

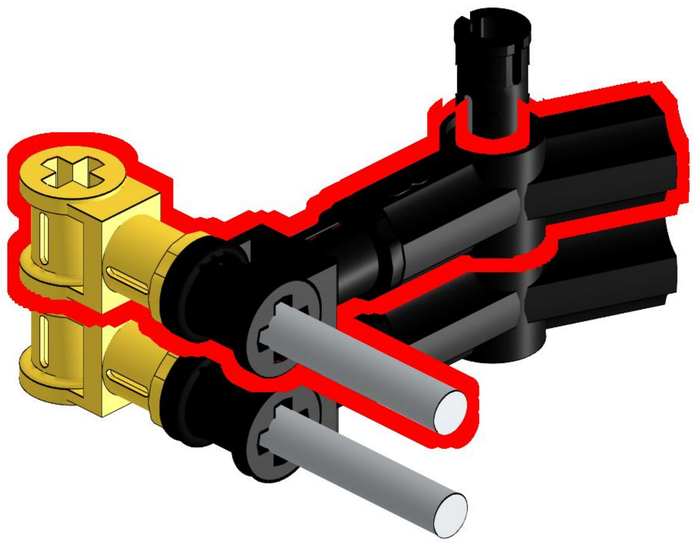

88

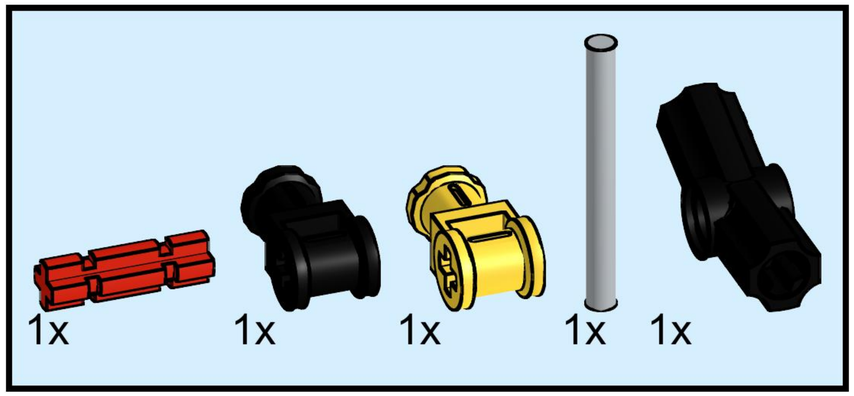

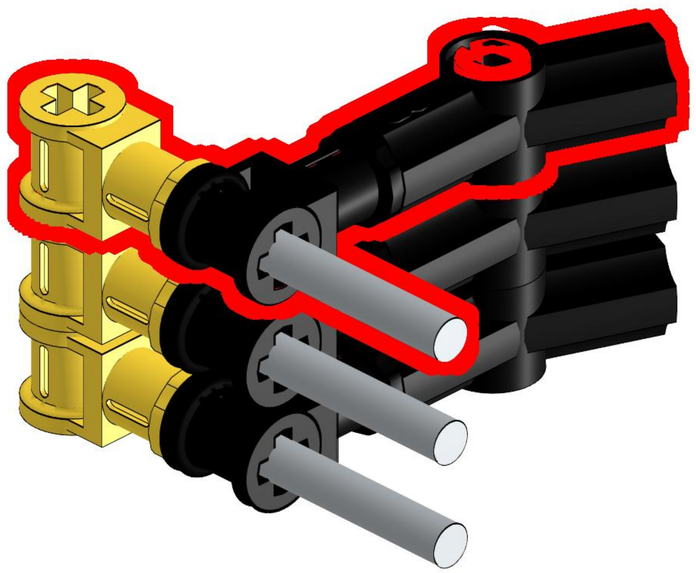

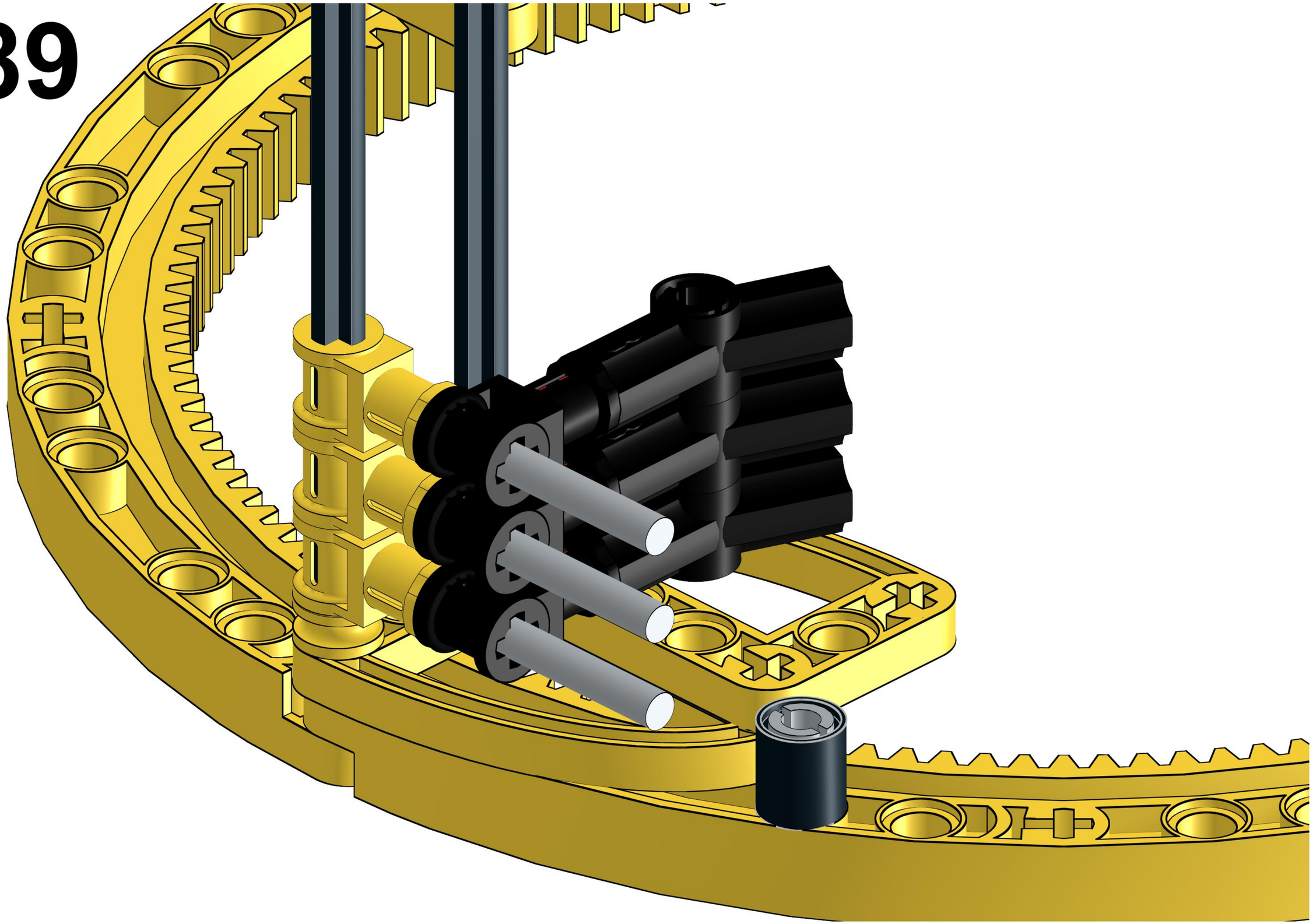

90

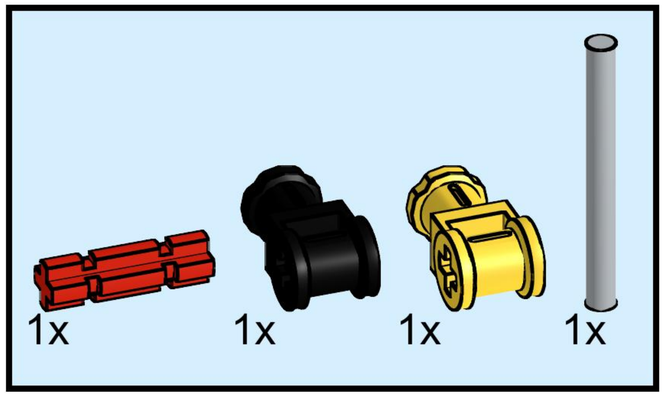

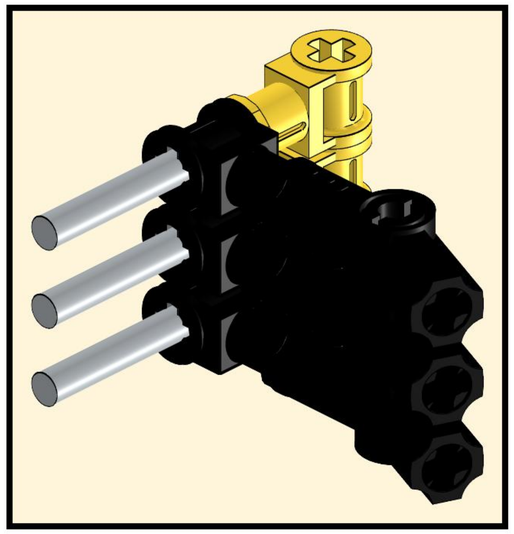

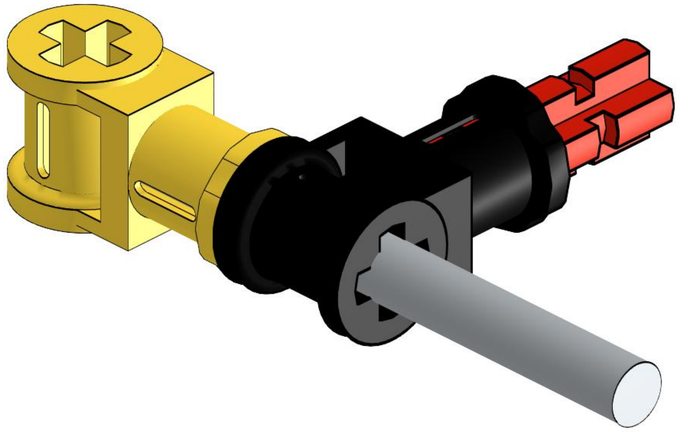

91

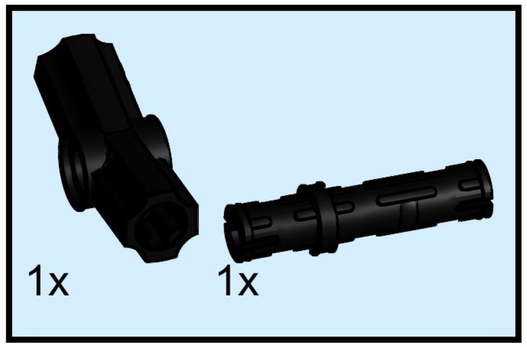

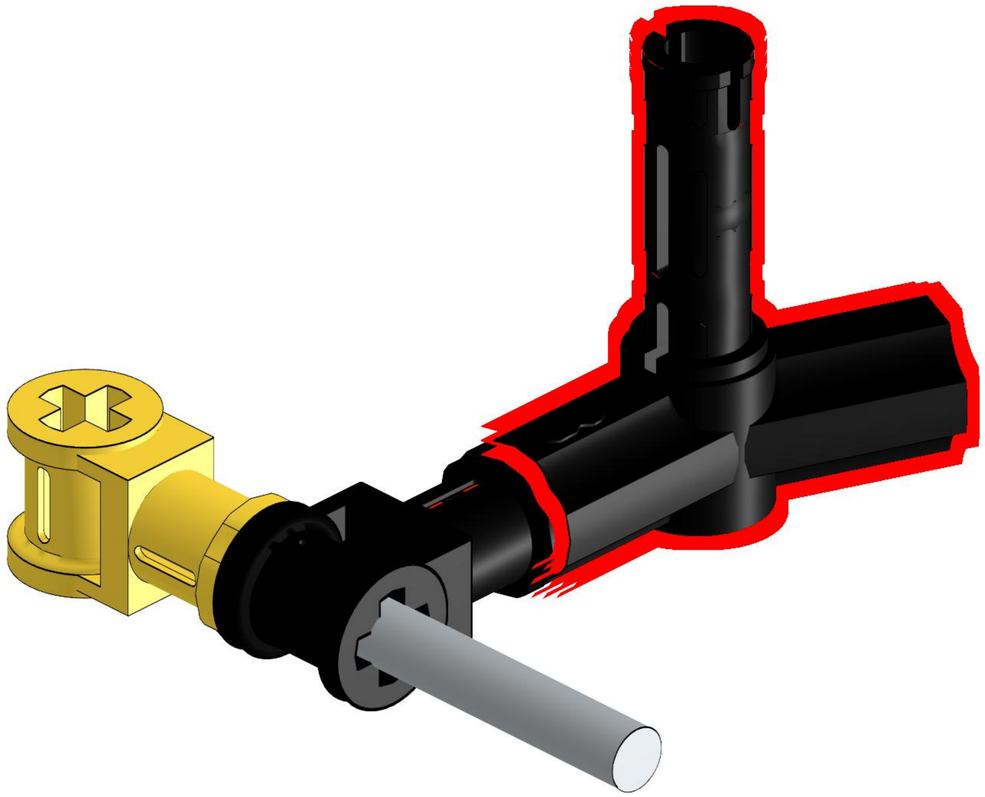

92

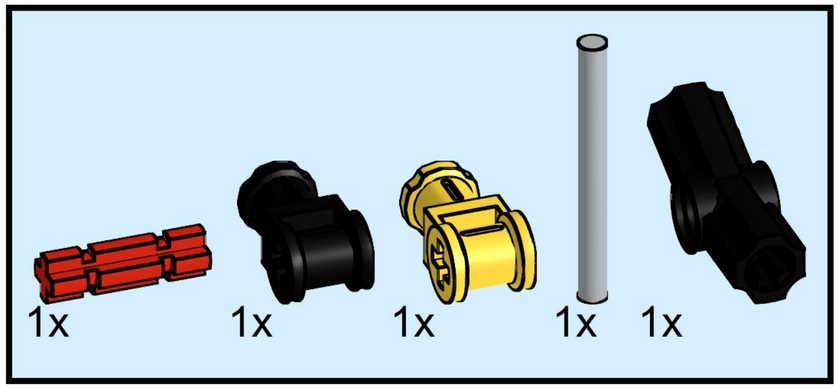

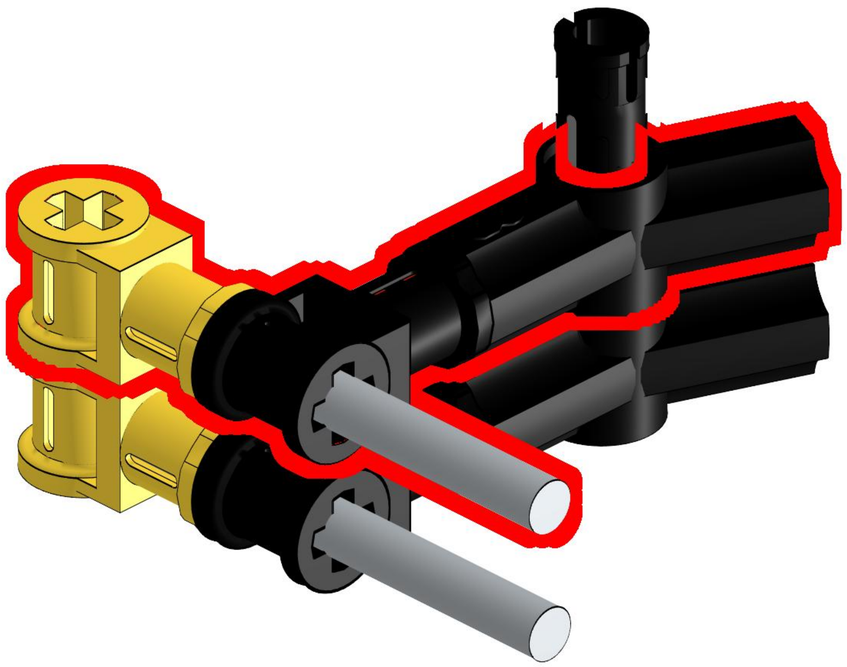

93

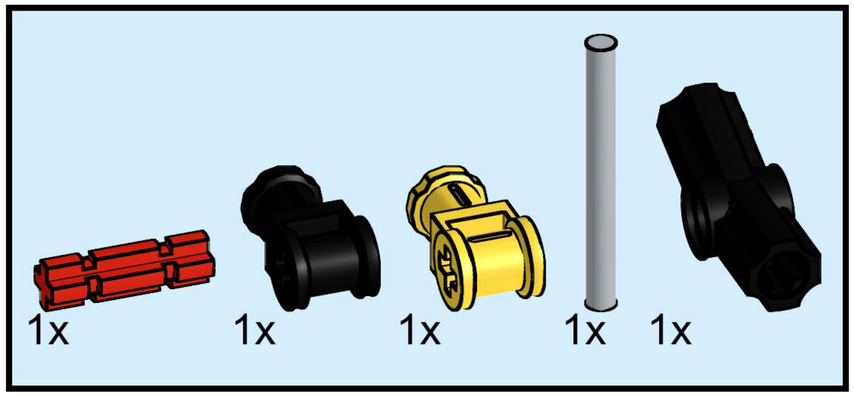

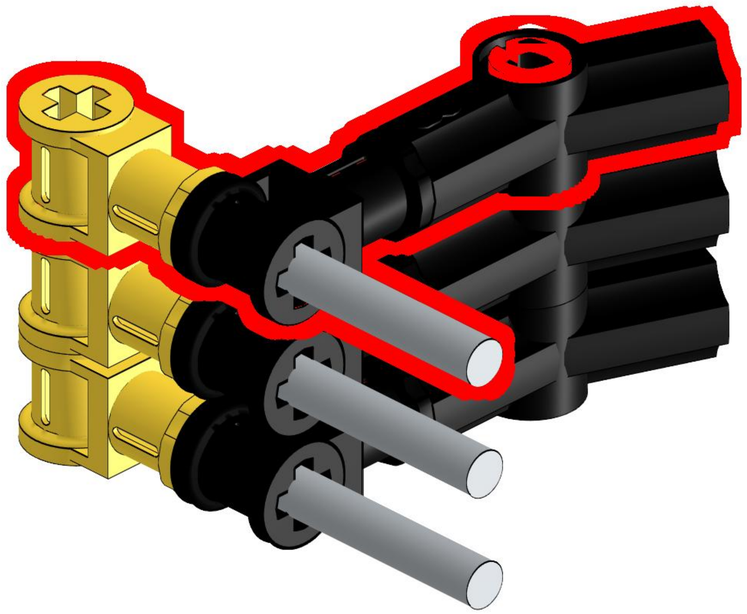

94

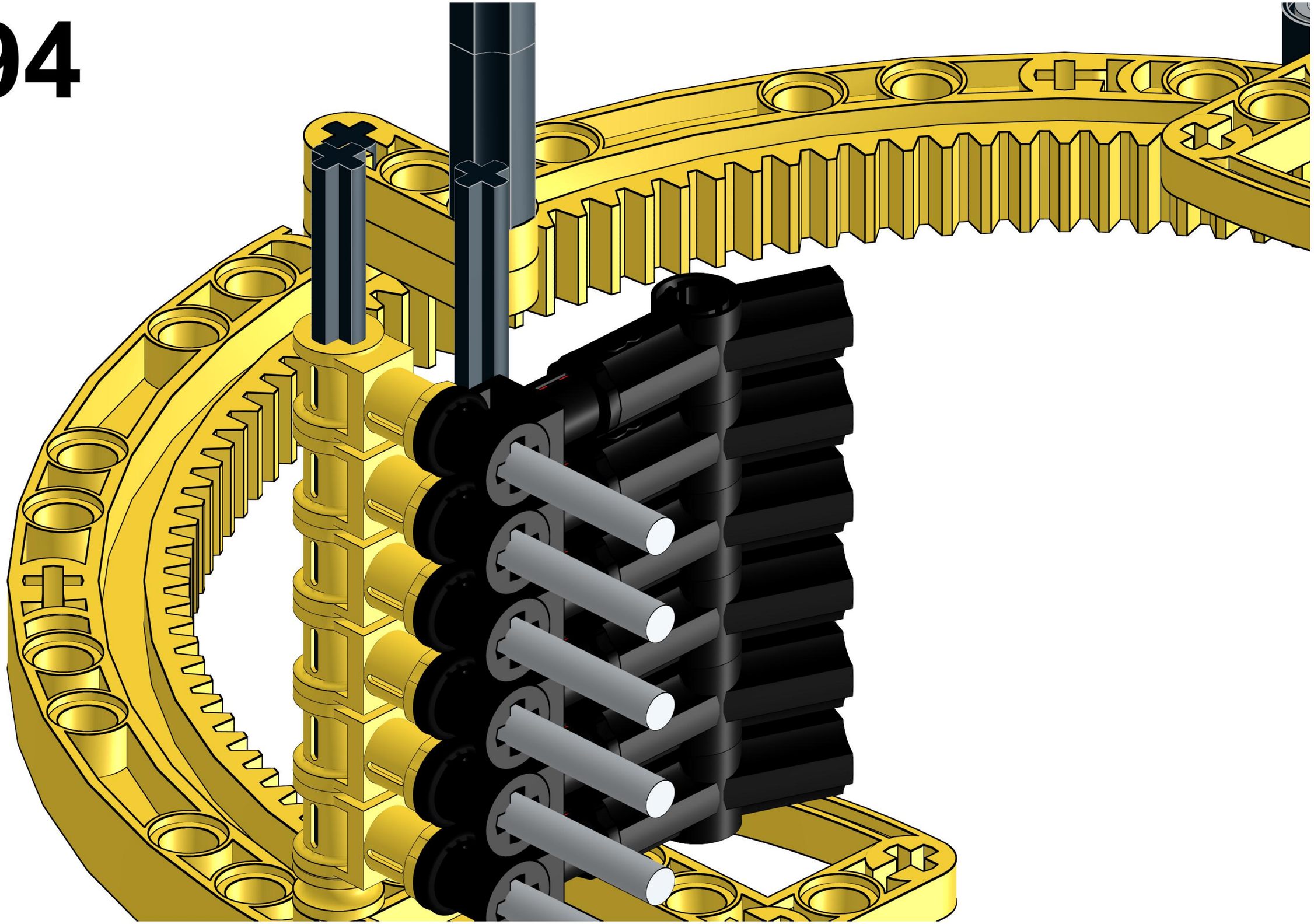

95

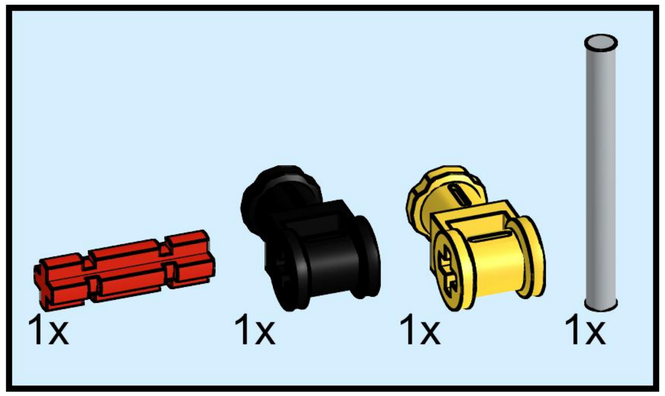

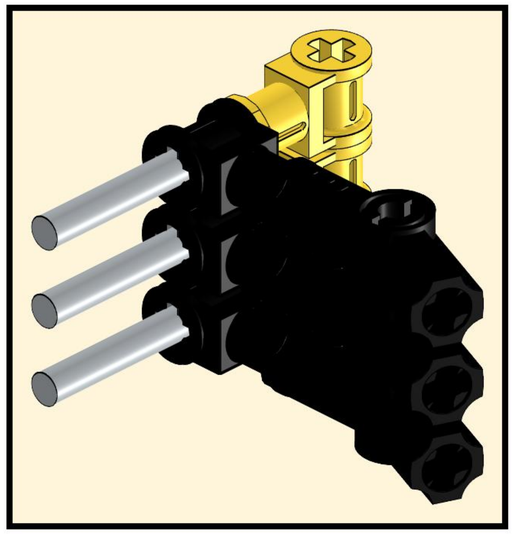

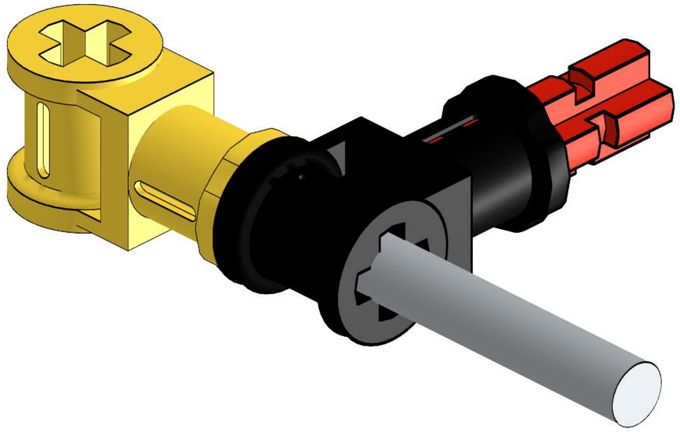

96

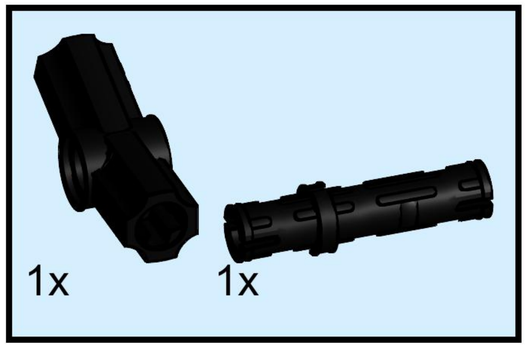

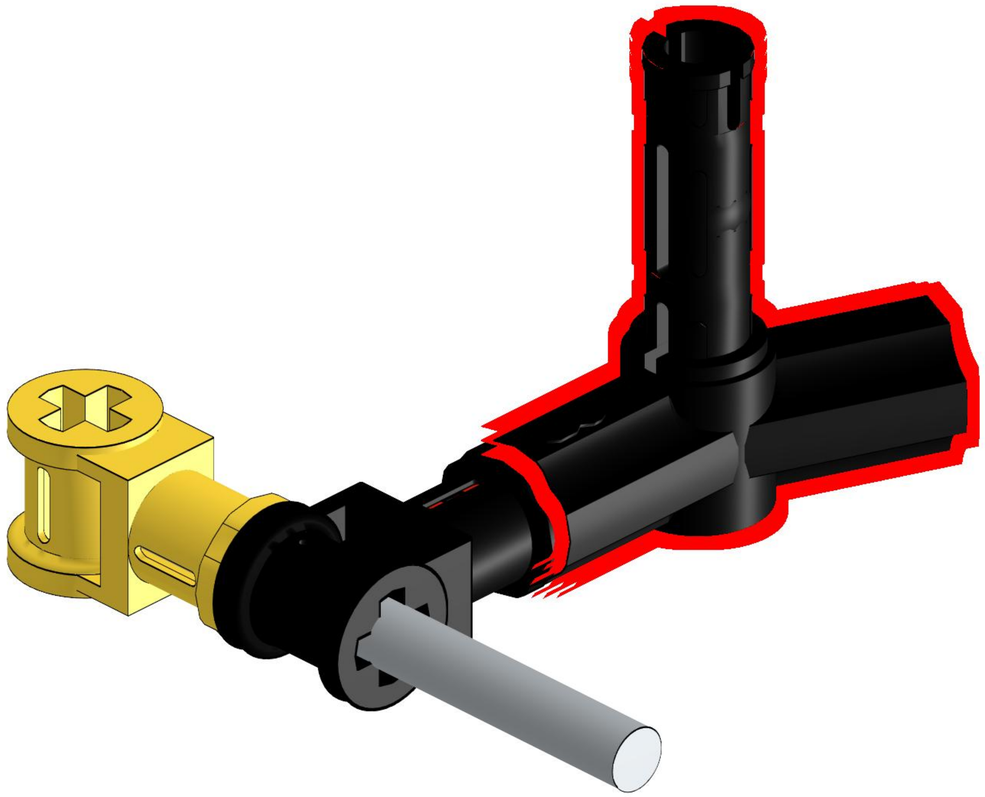

97

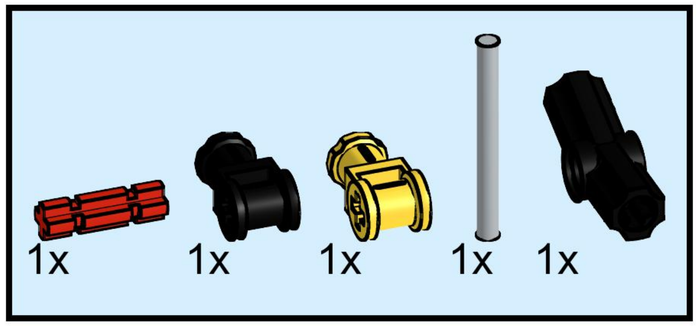

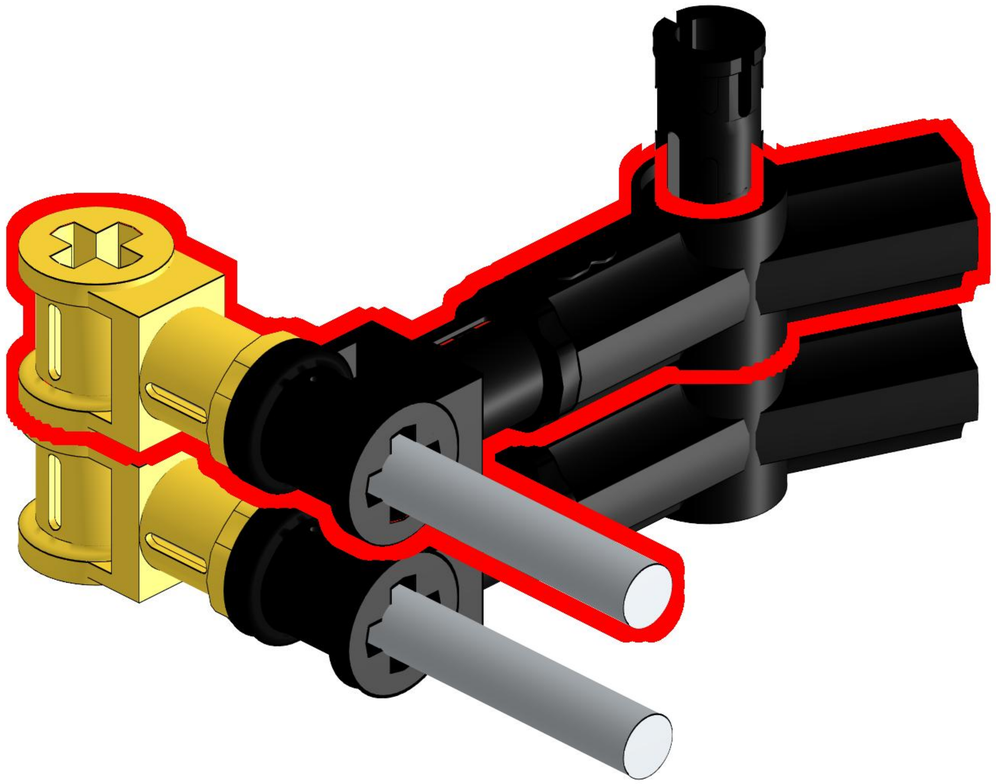

98

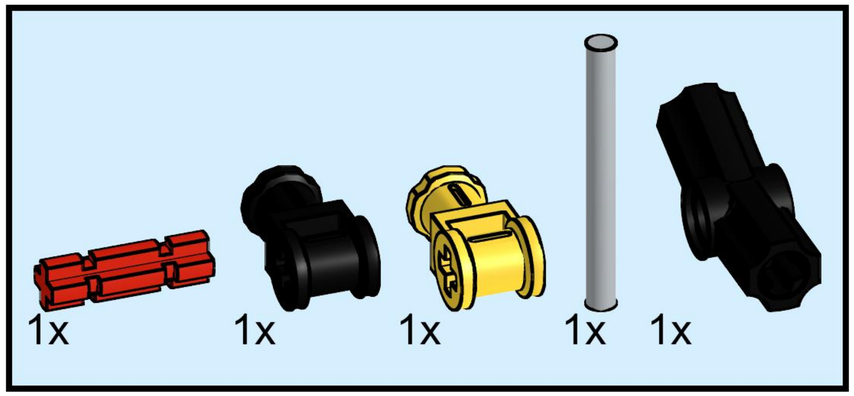

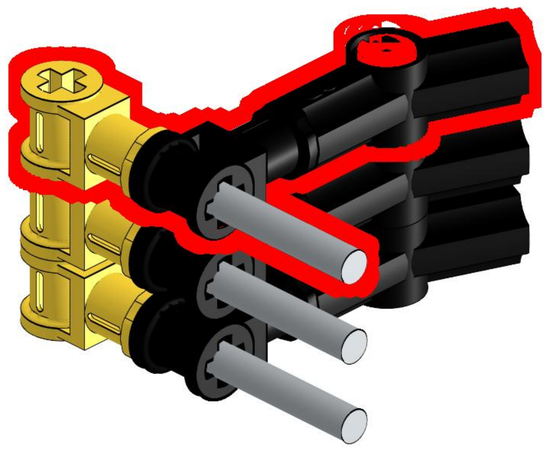

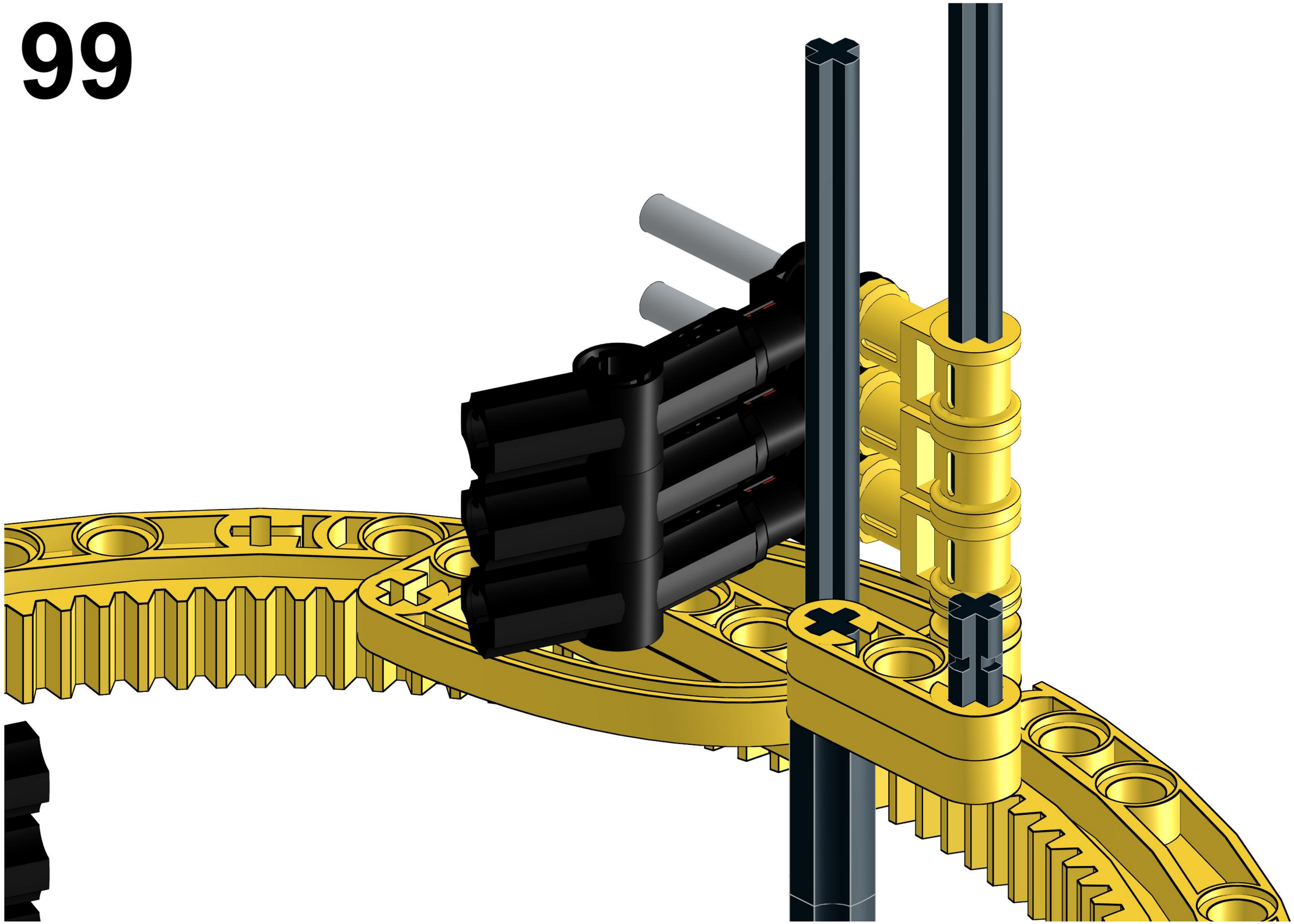

100

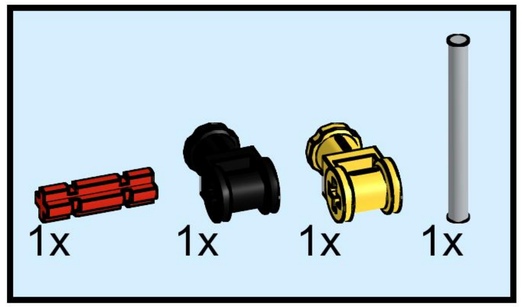

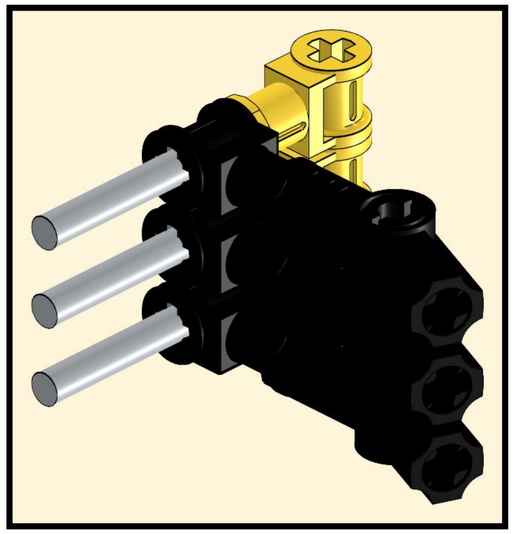

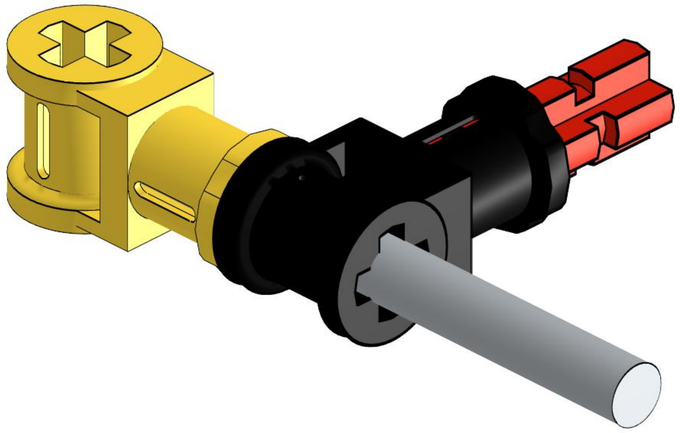

101

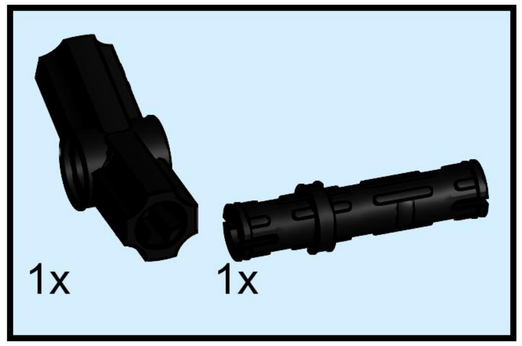

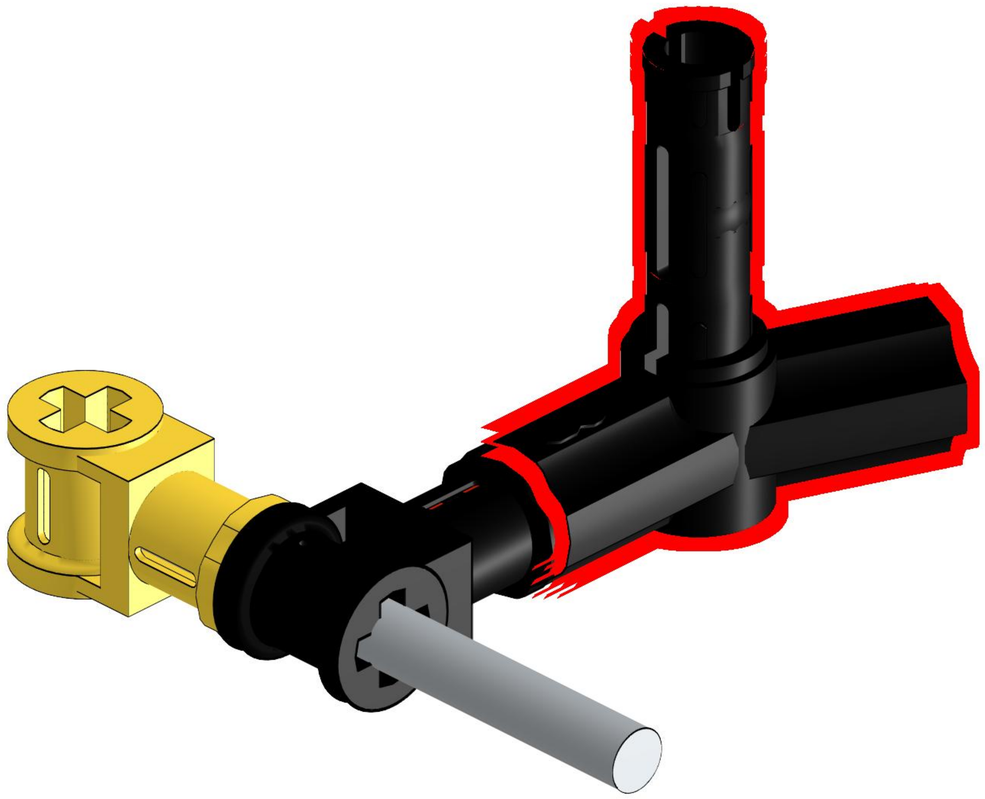

102

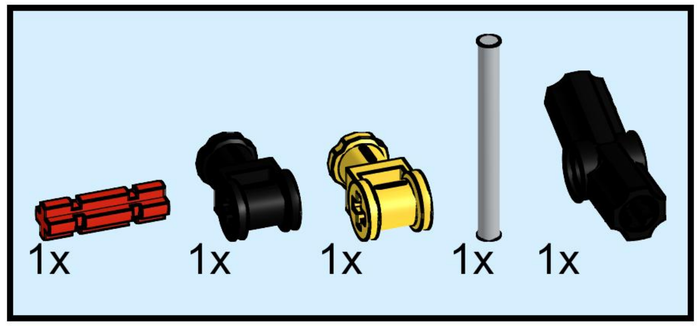

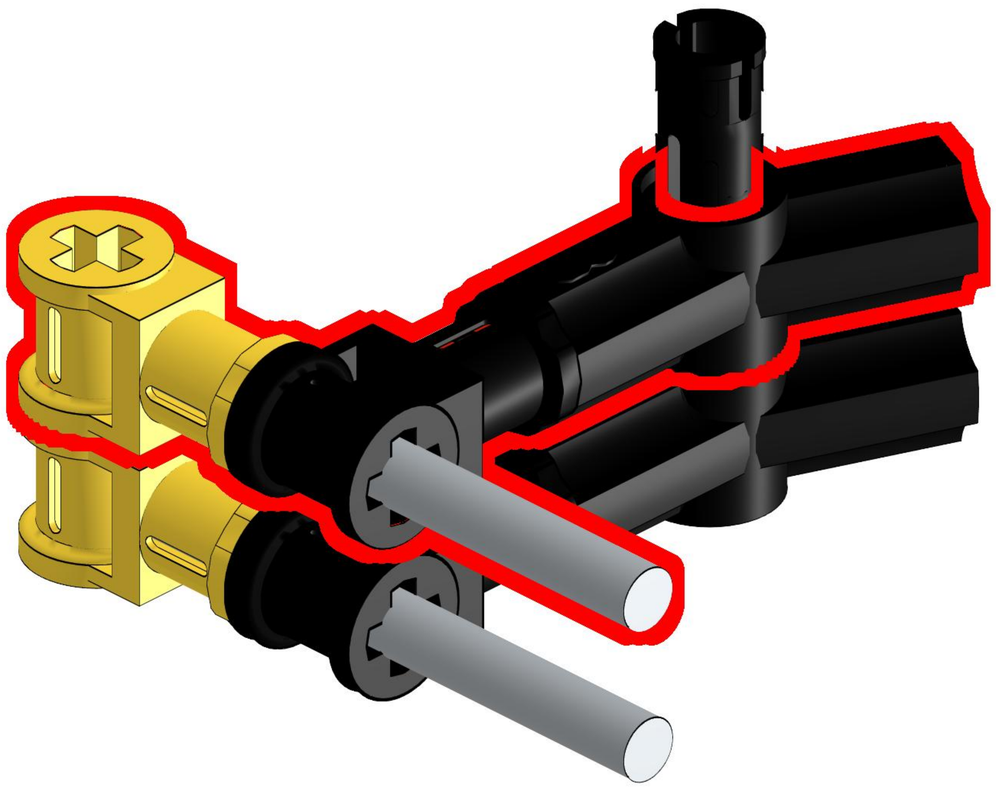

103

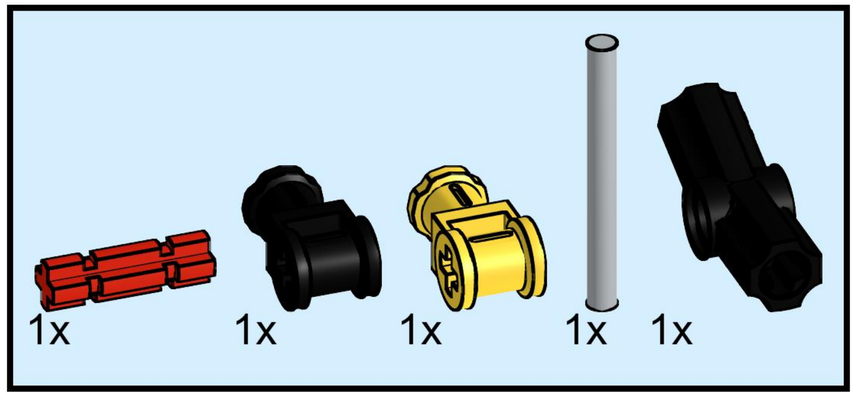

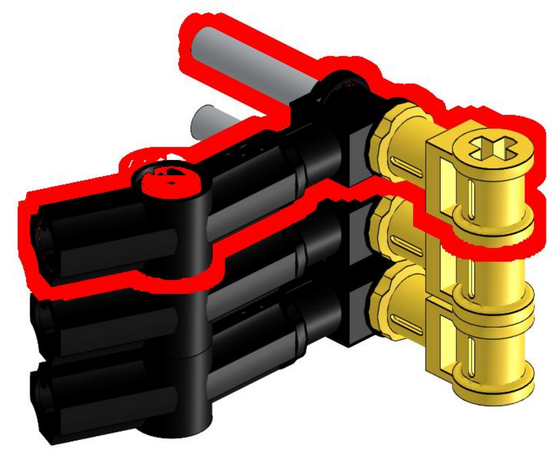

104

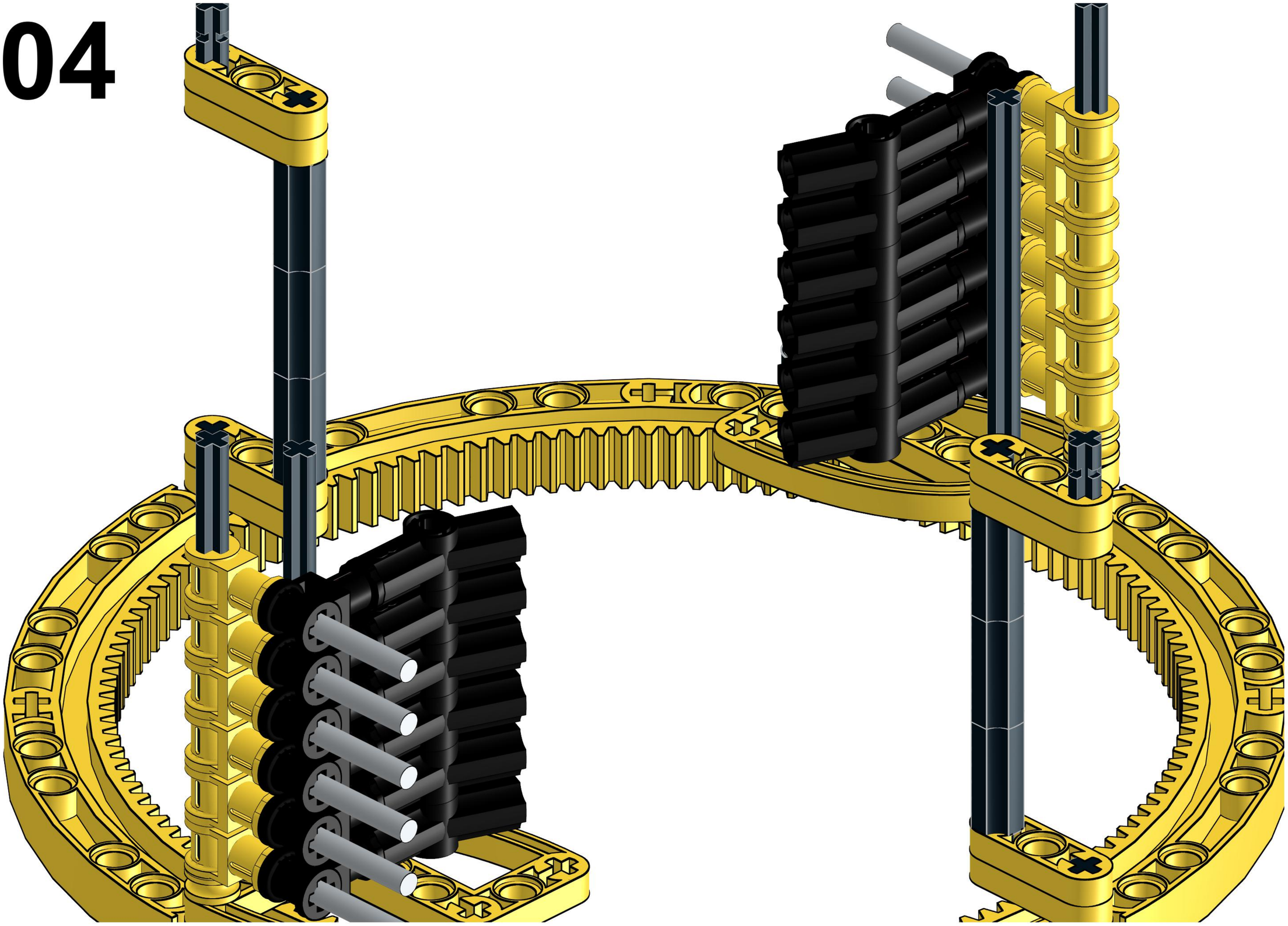

2x

105

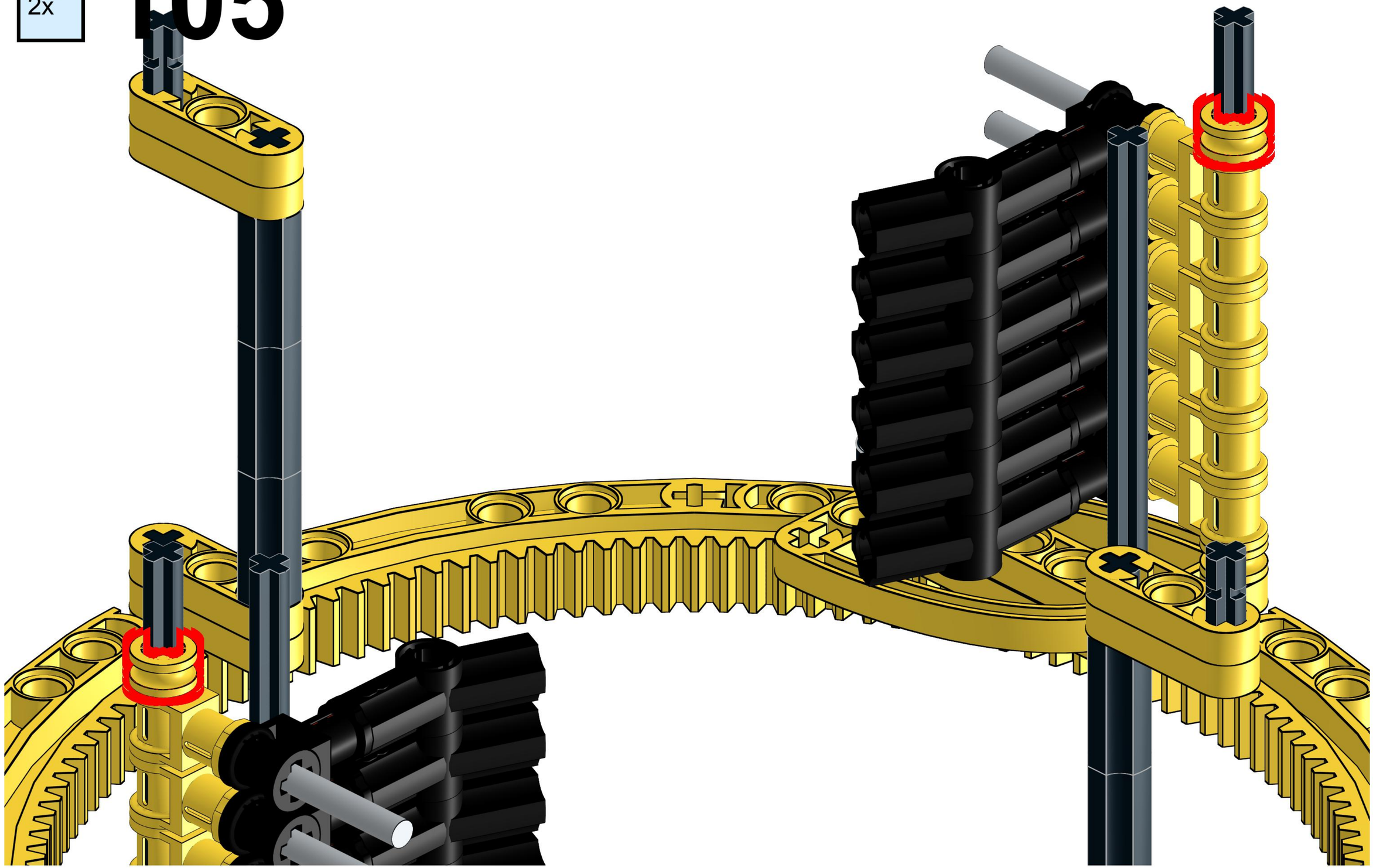

106

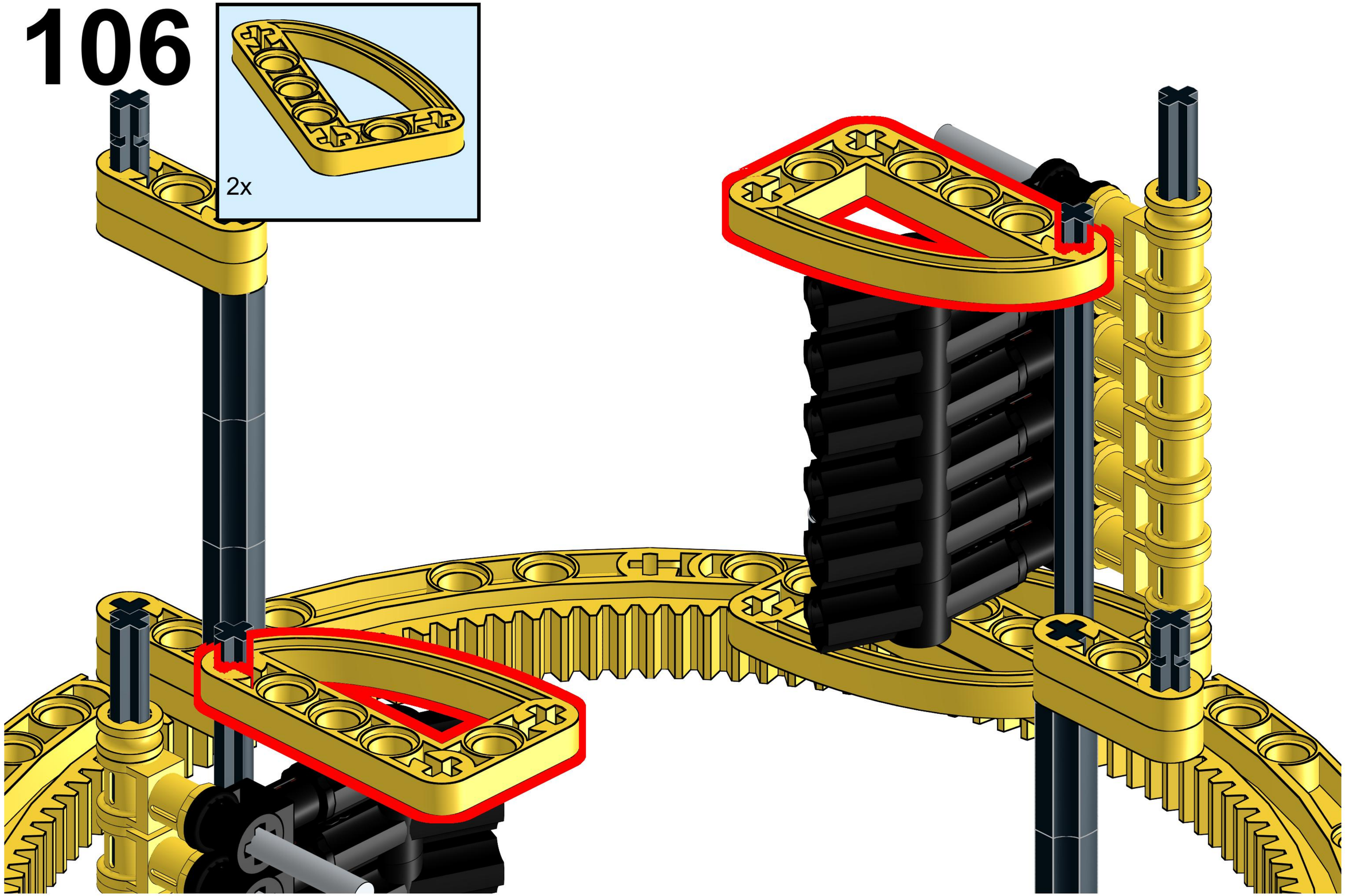

107

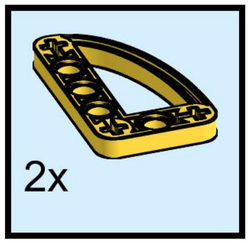

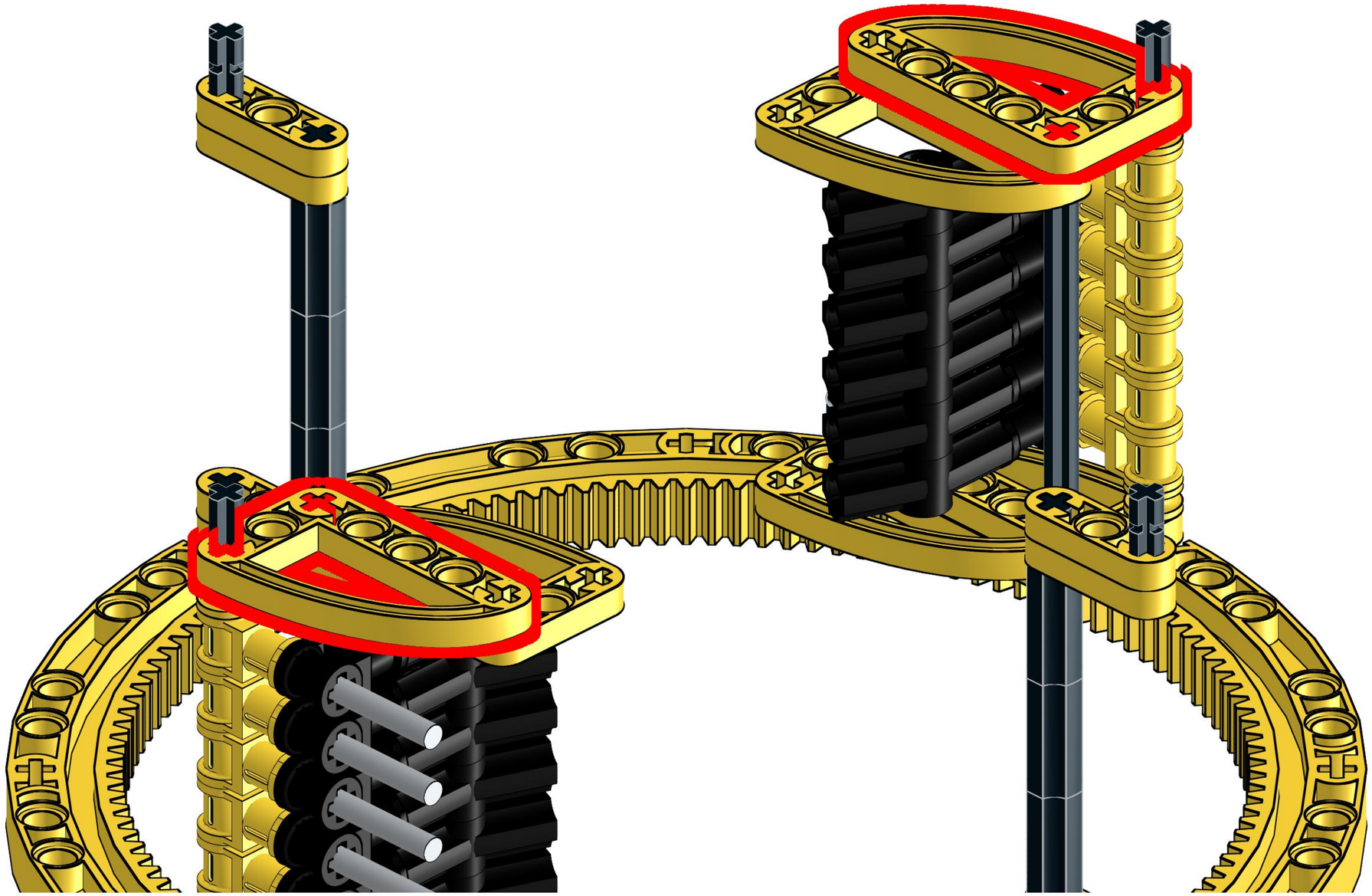

108

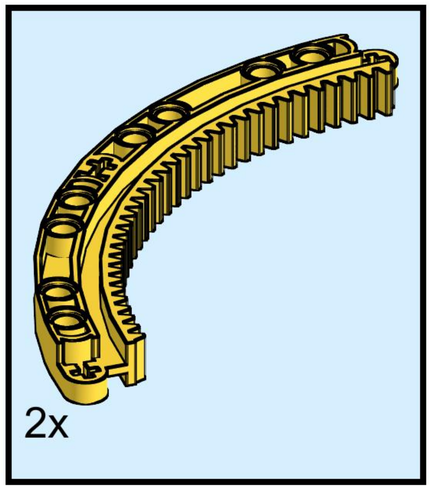

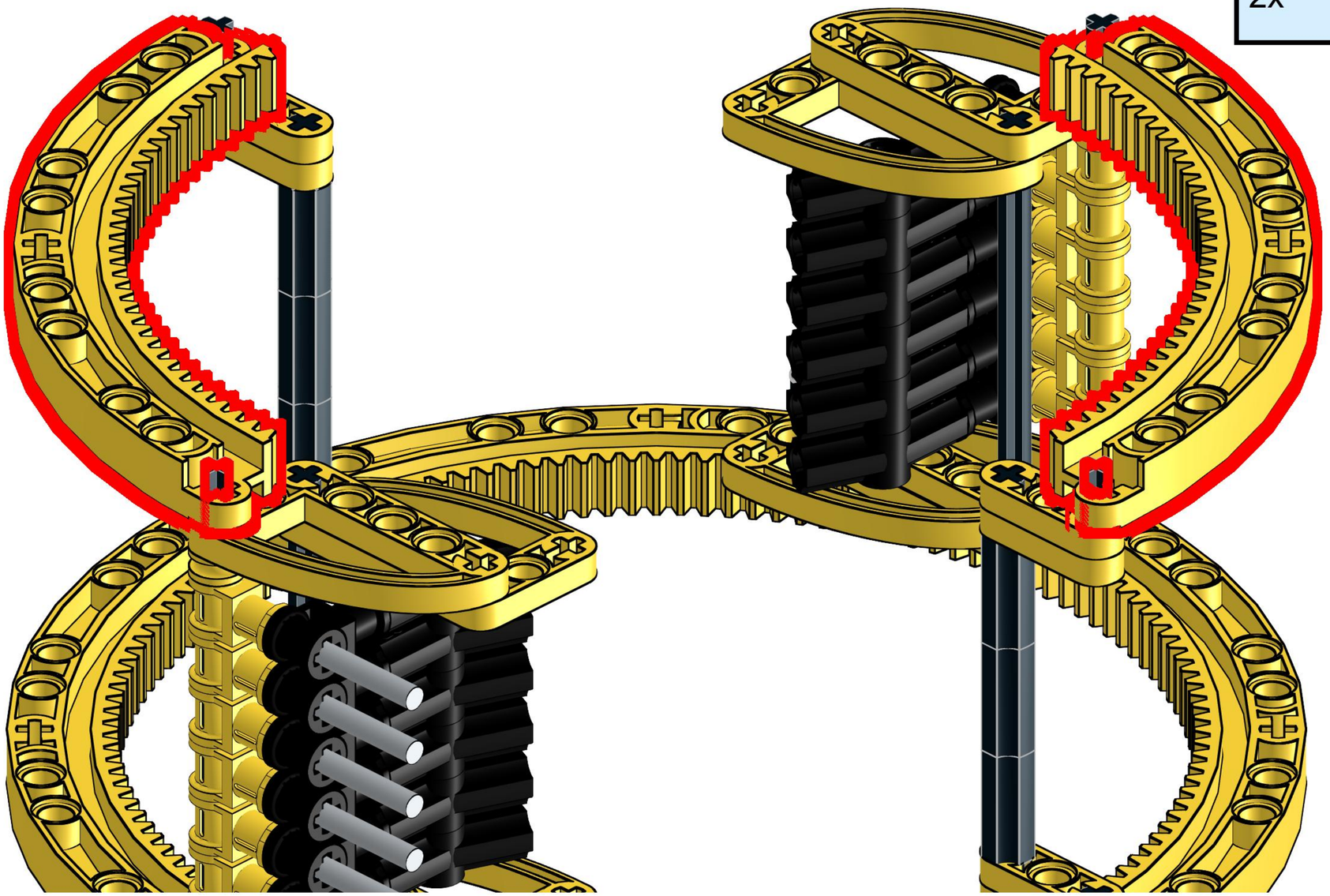

109

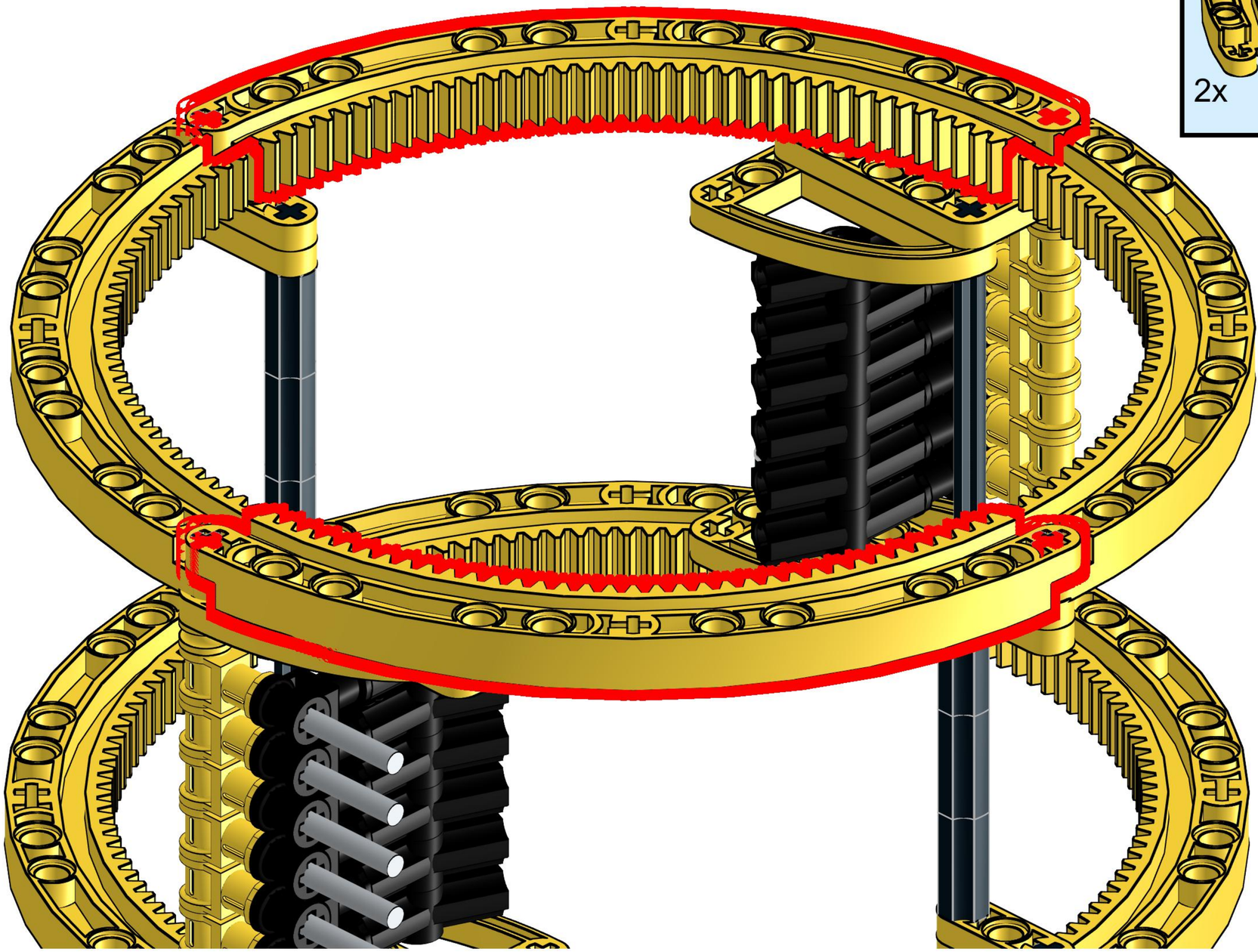

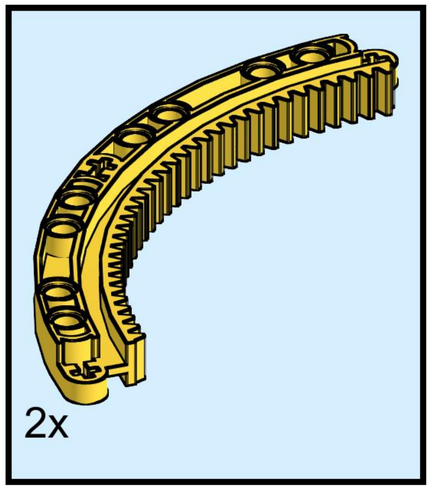

110

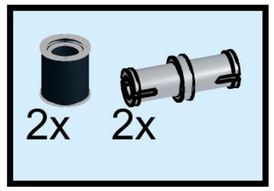

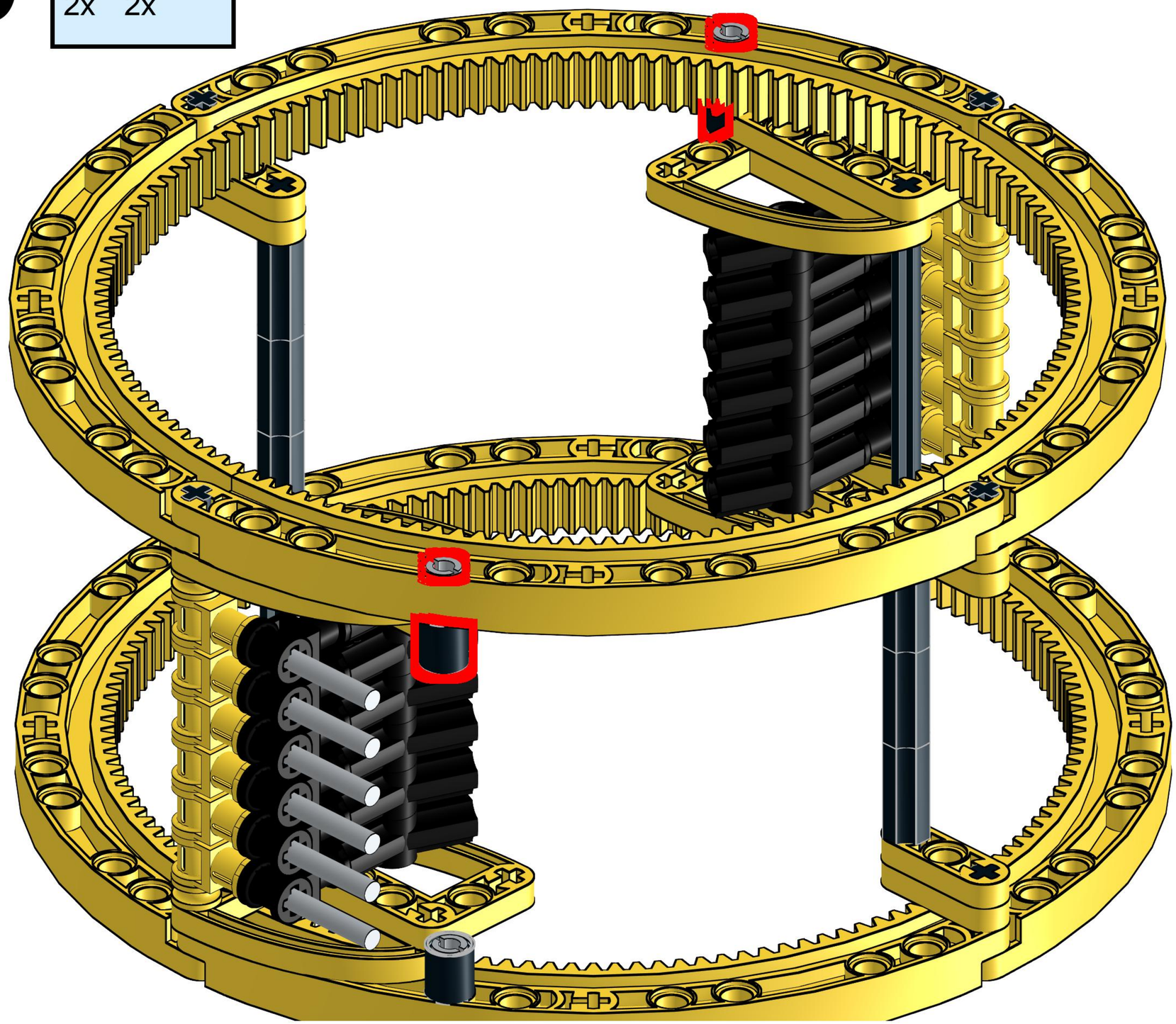

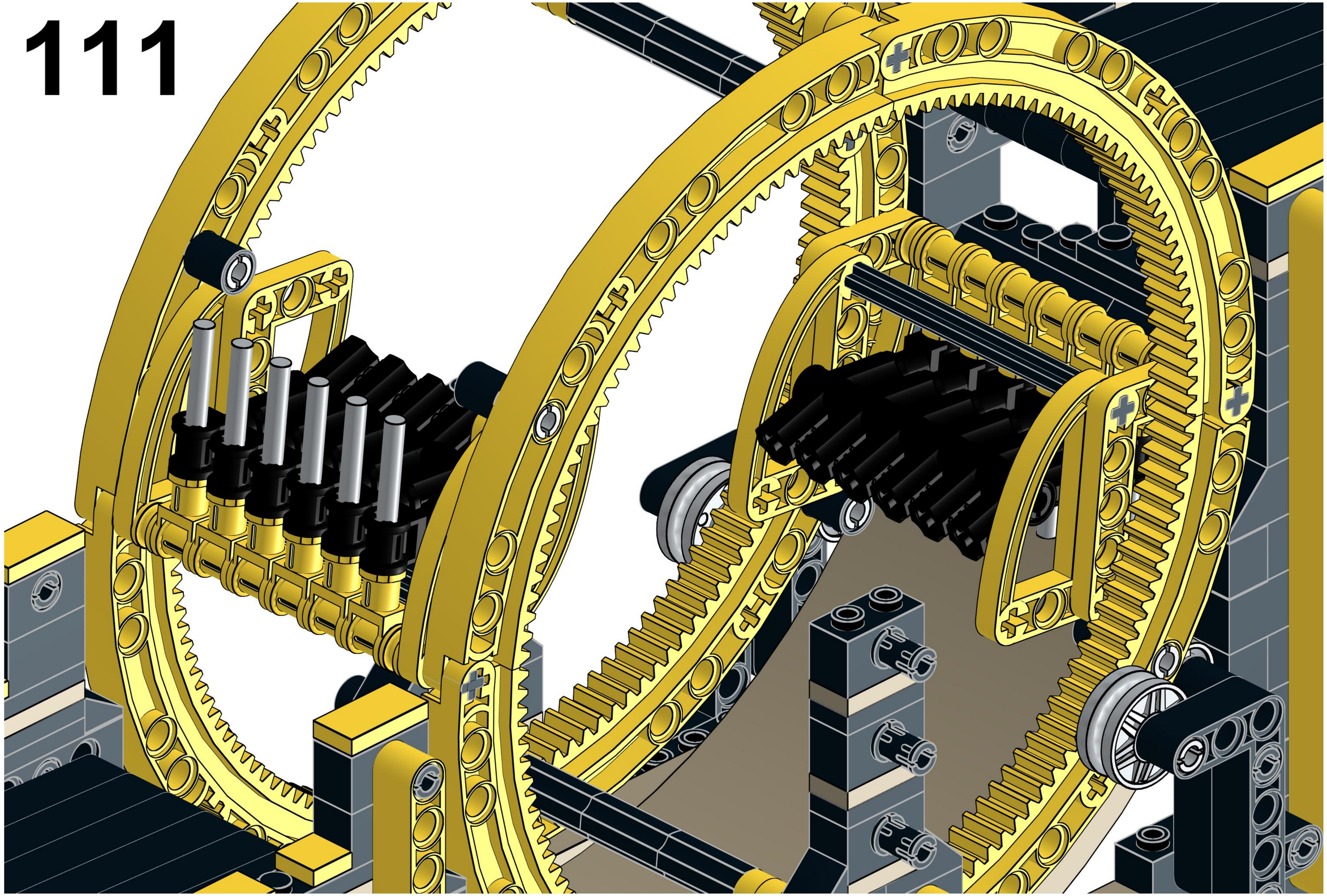

112

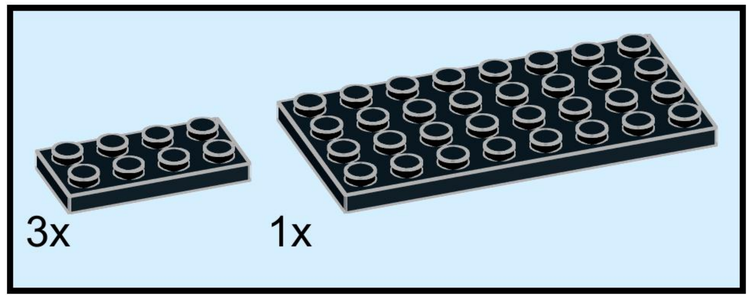

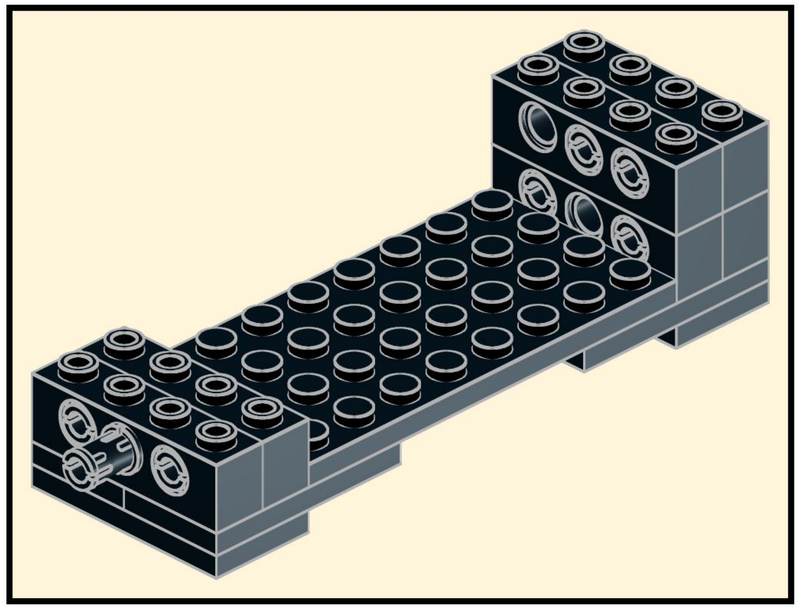

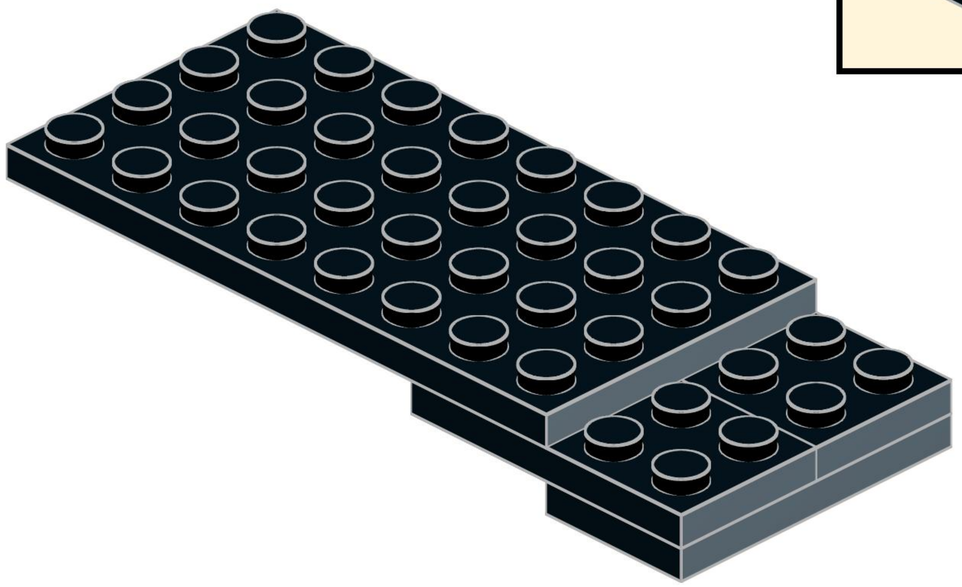

113

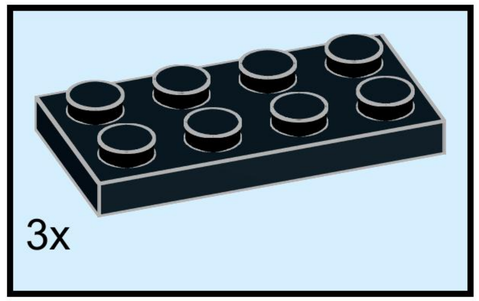

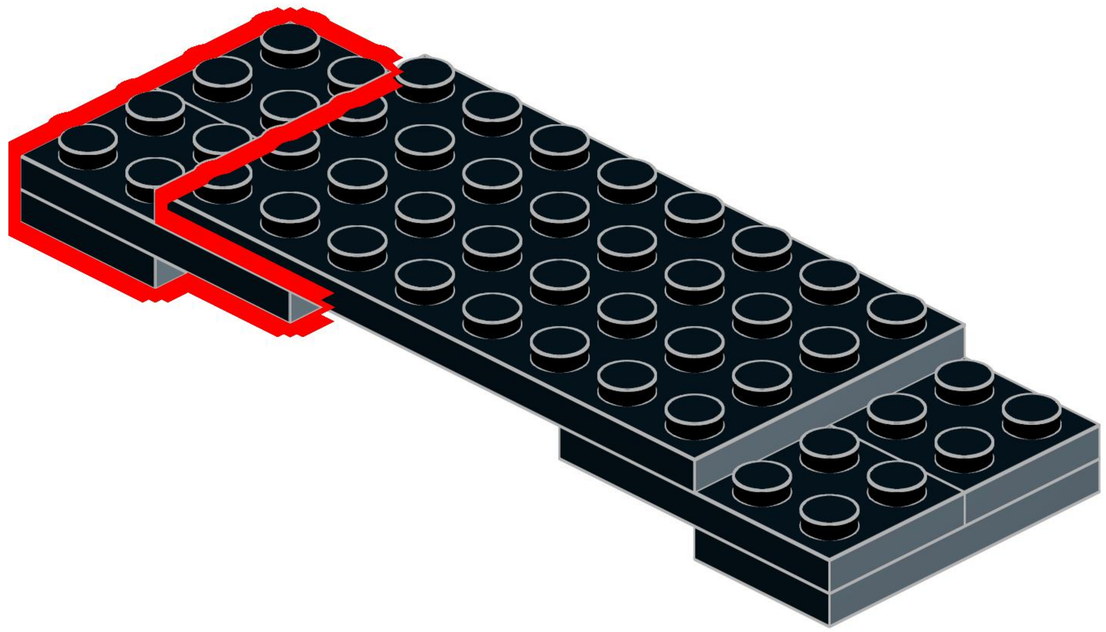

114

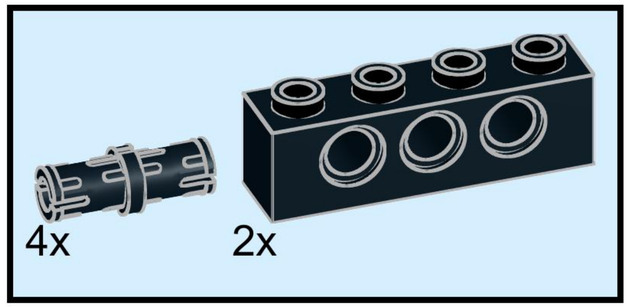

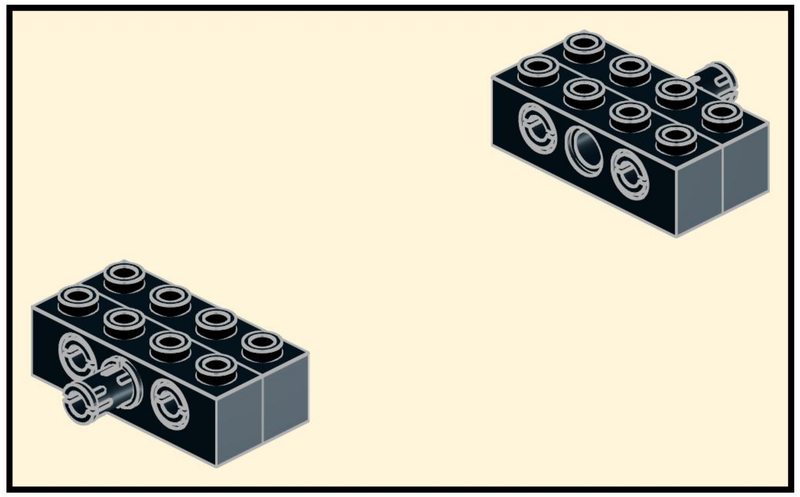

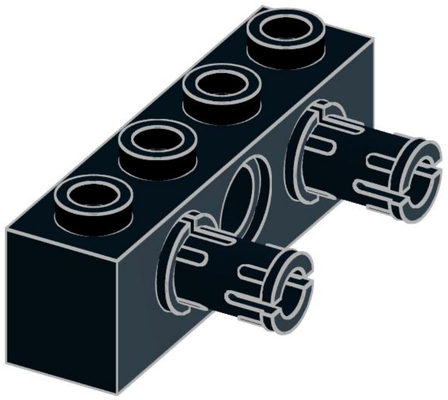

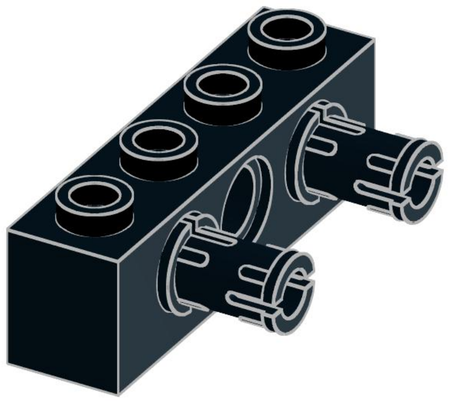

115

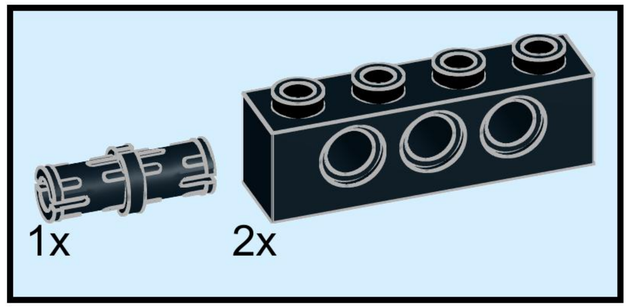

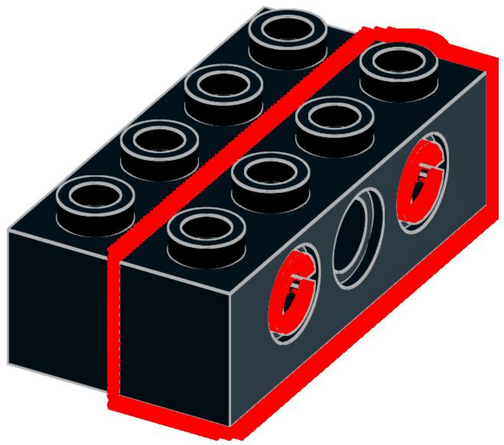

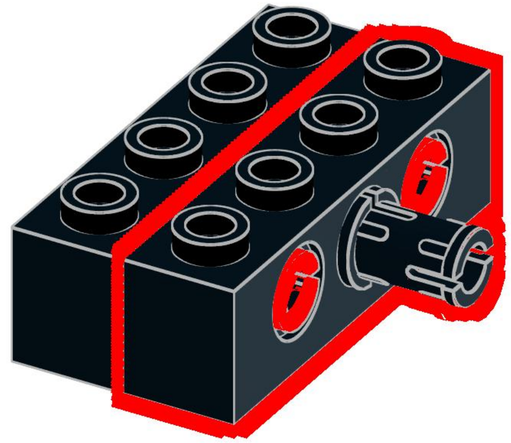

116

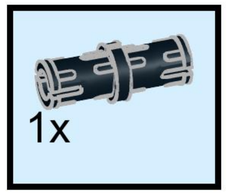

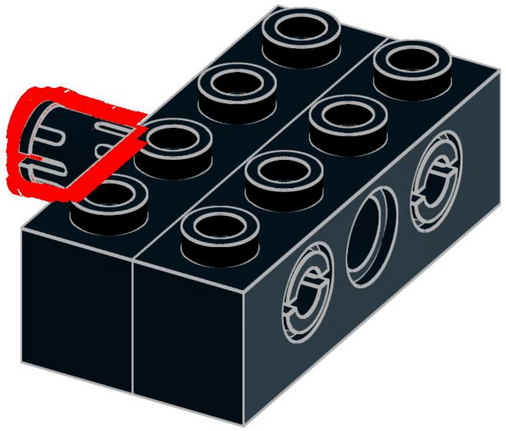

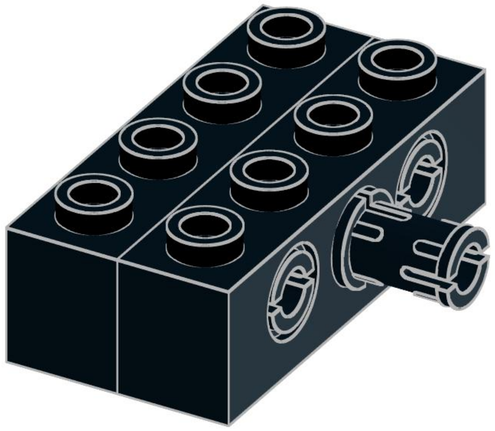

117

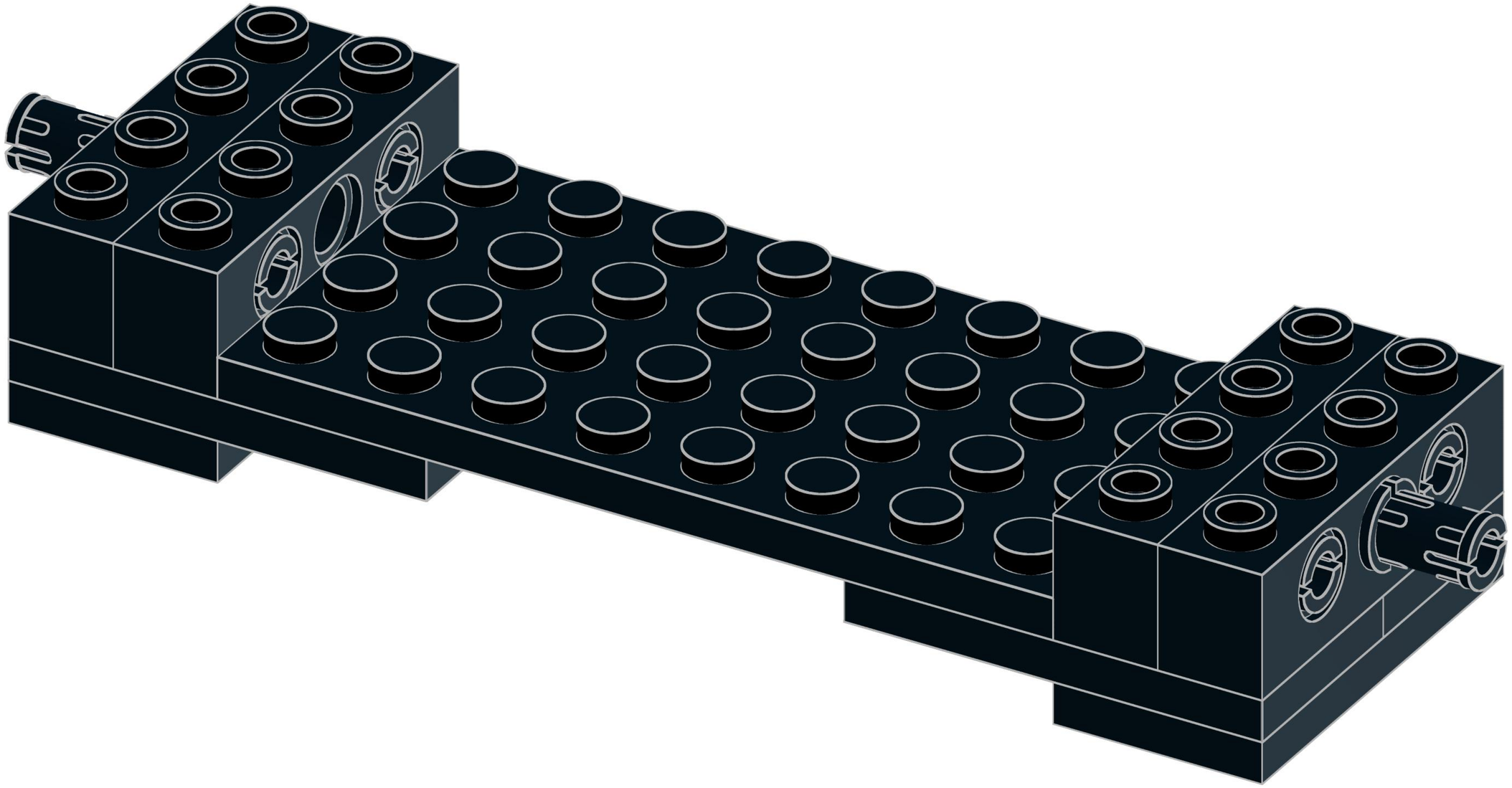

118

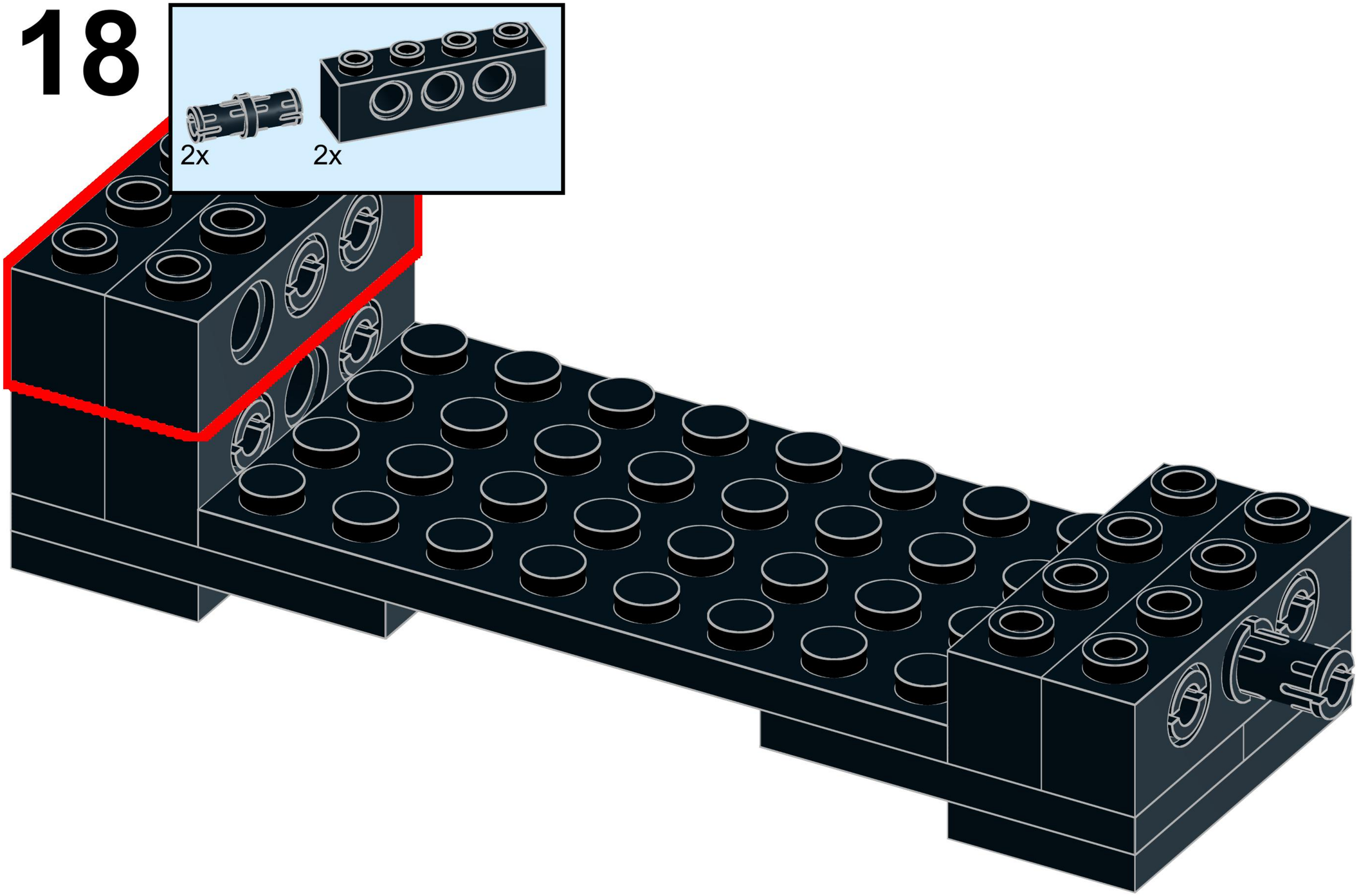

Ensure the location of the empty hole is correct.

119

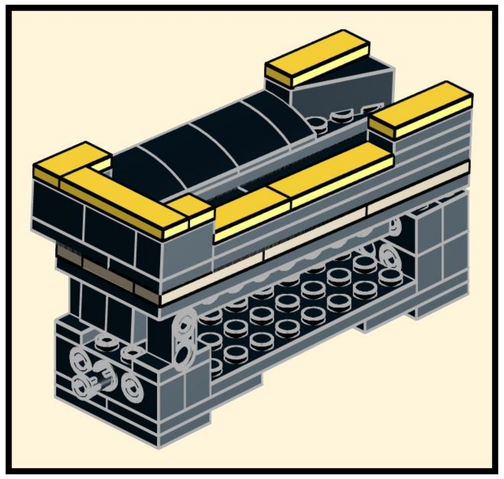

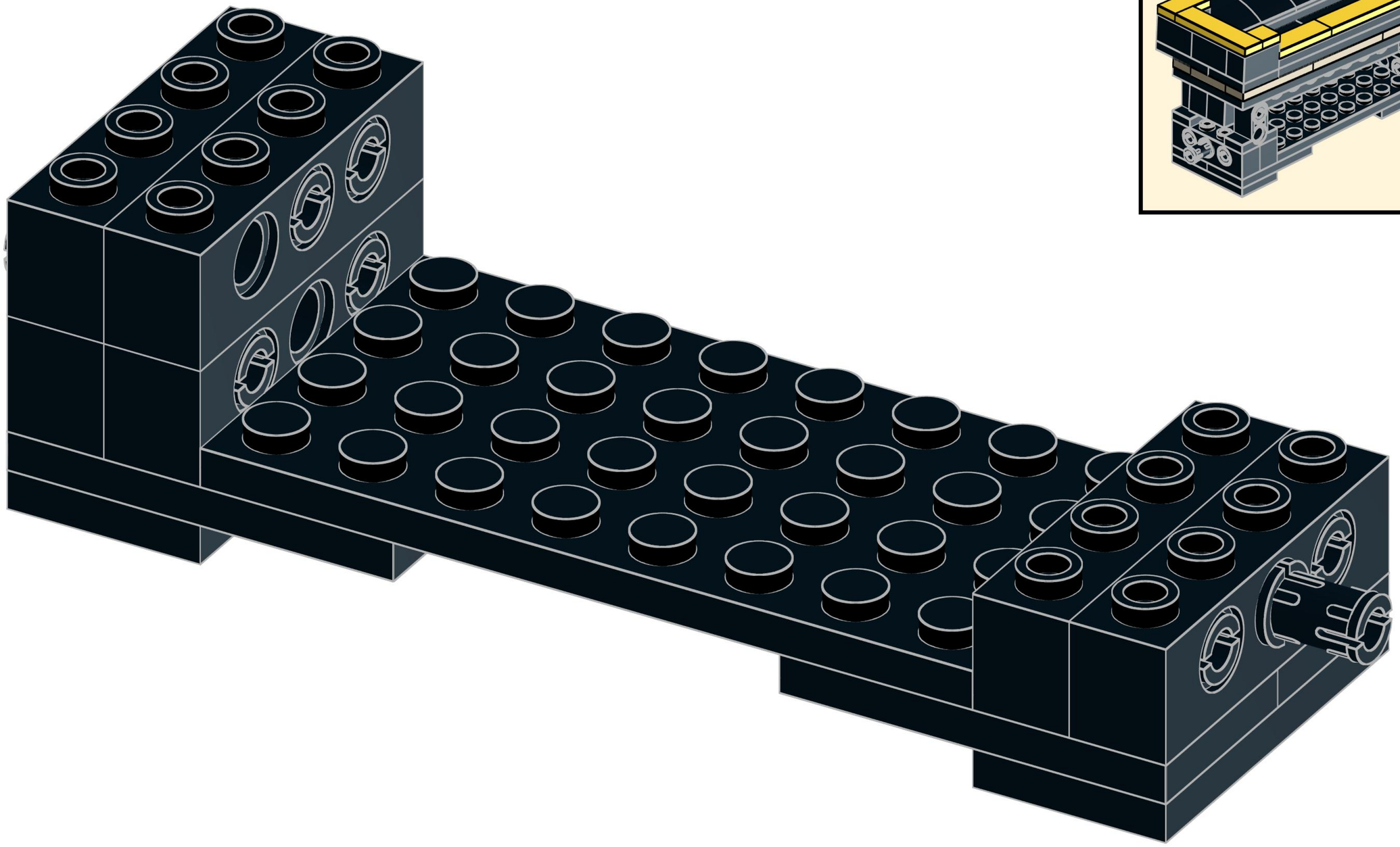

120

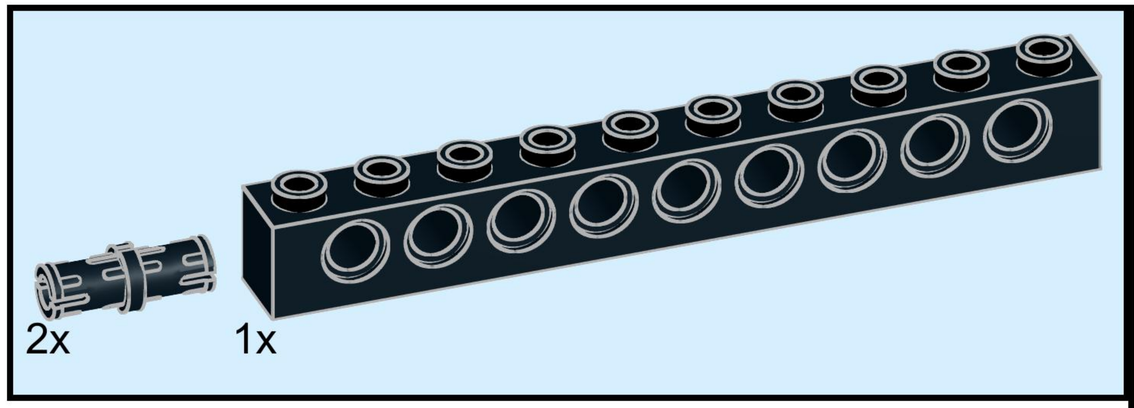

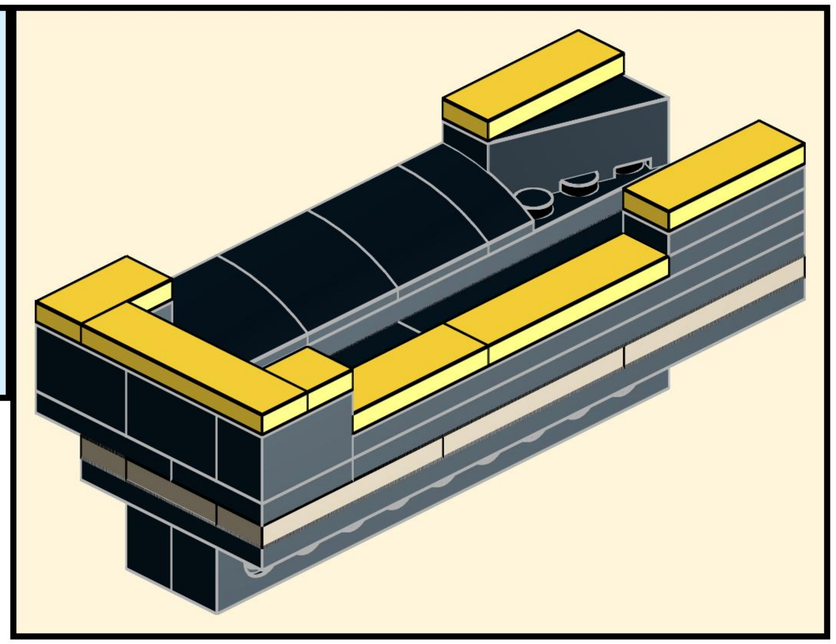

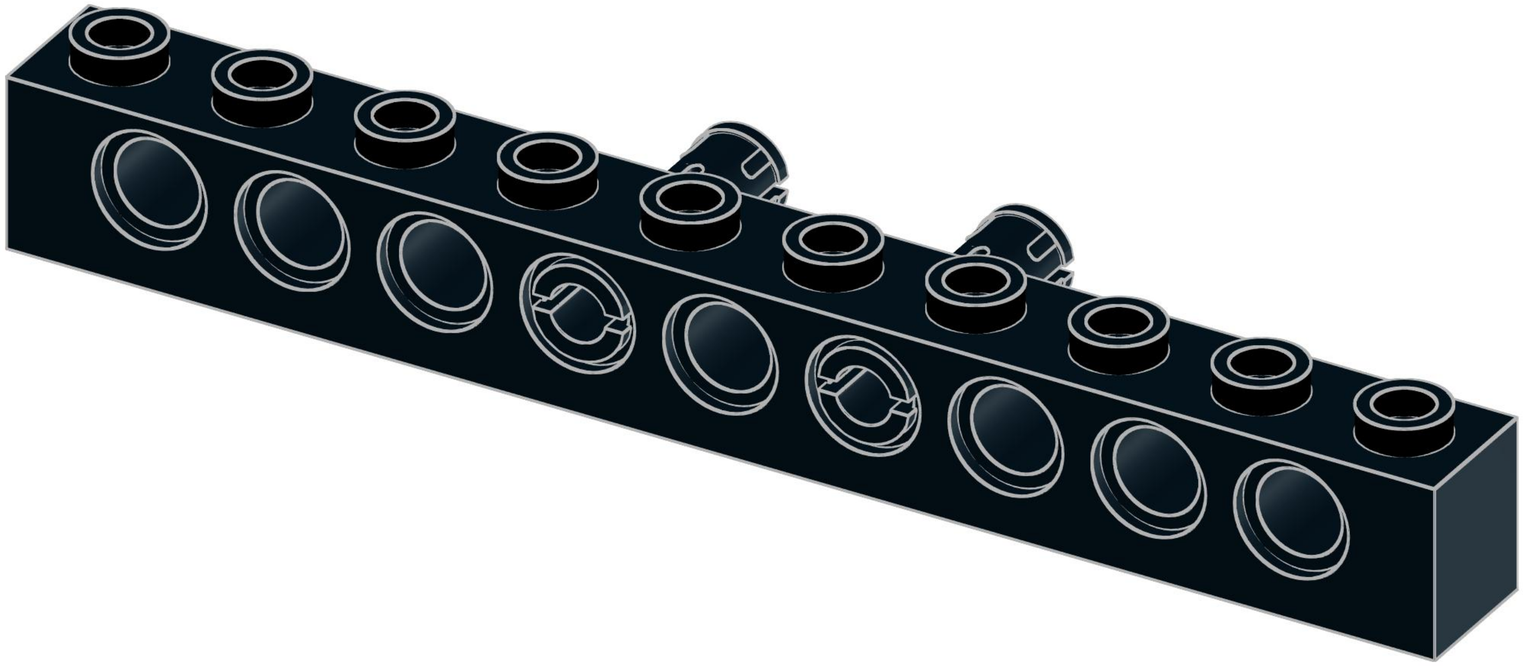

121

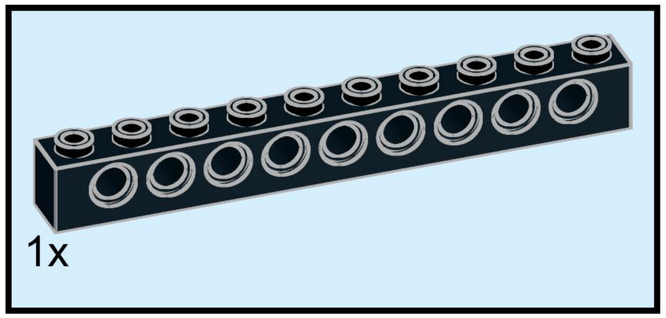

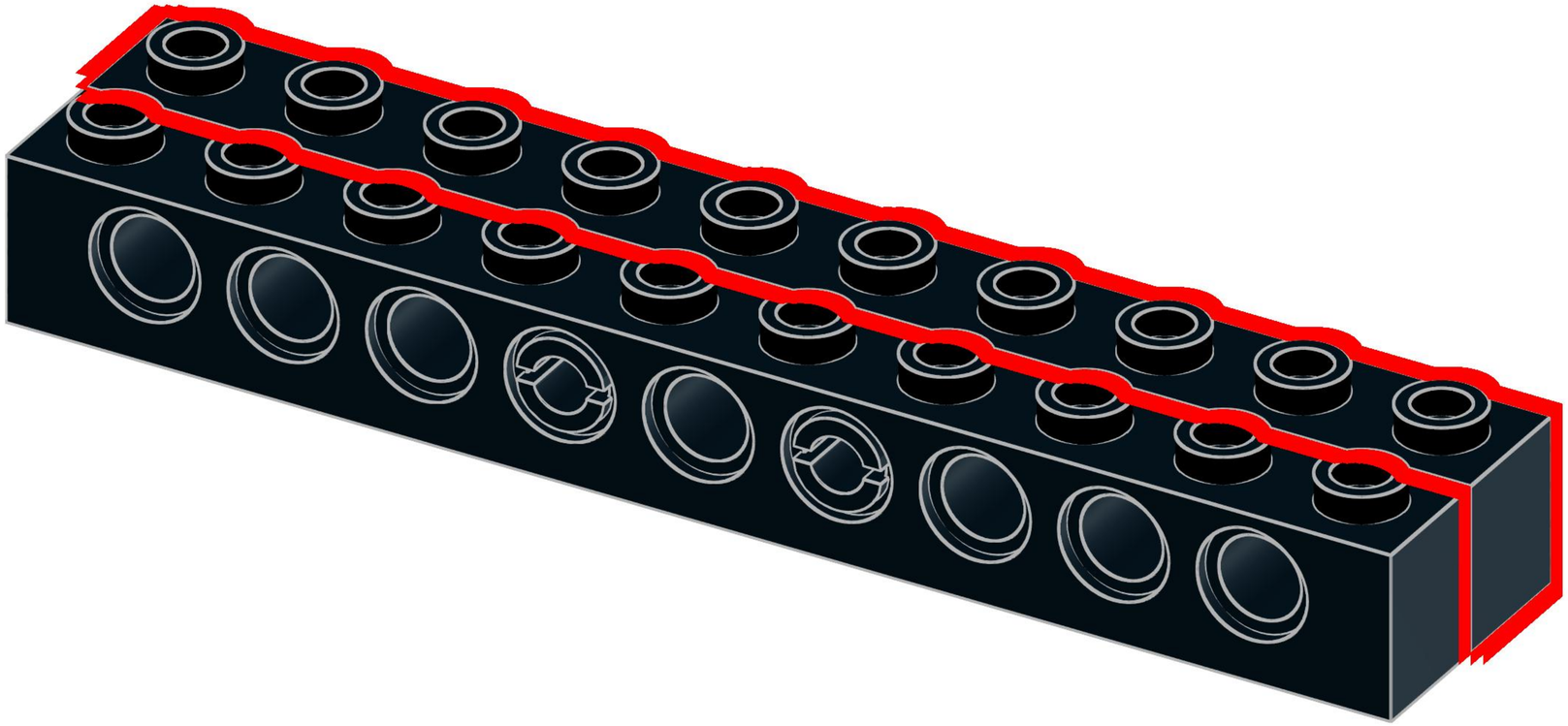

122

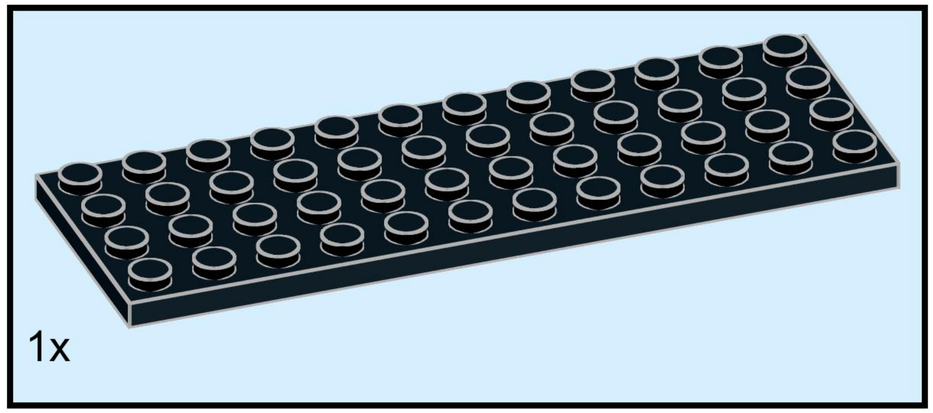

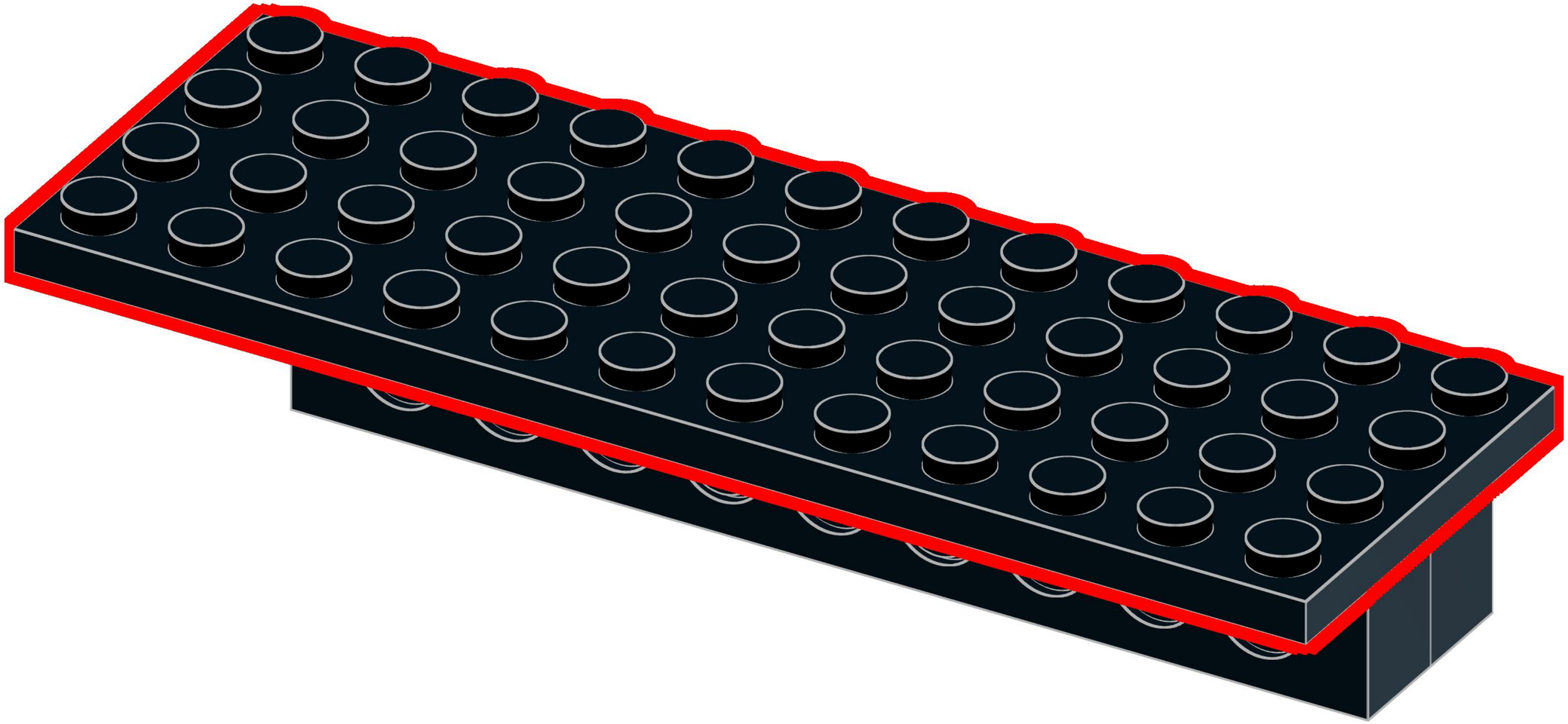

123

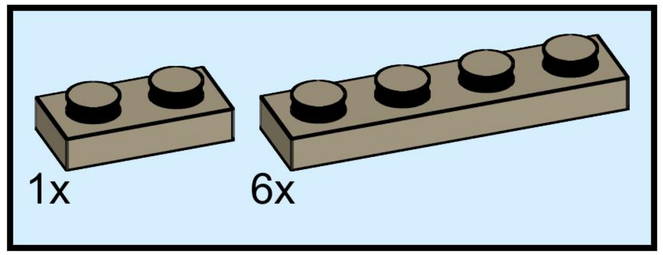

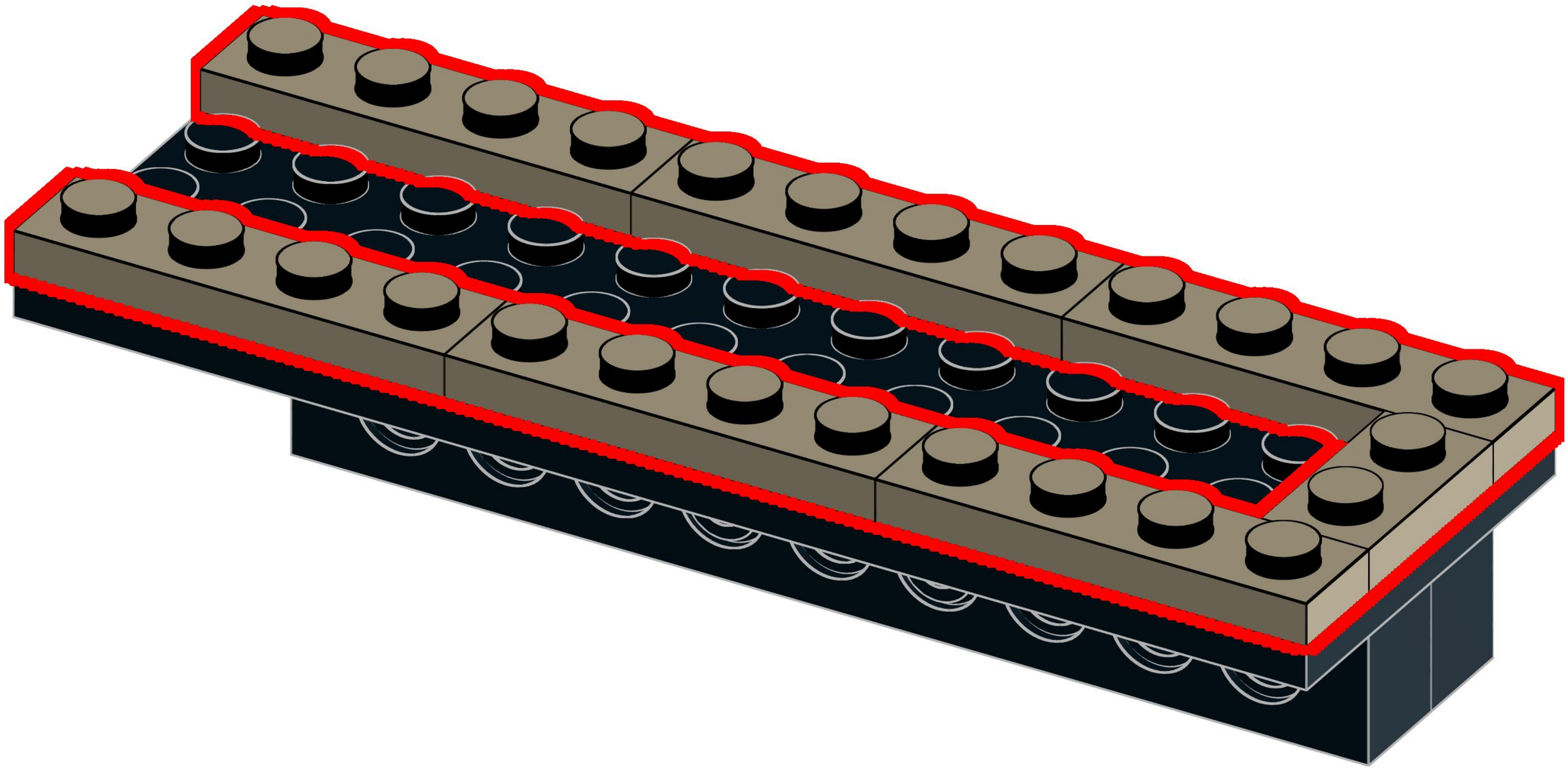

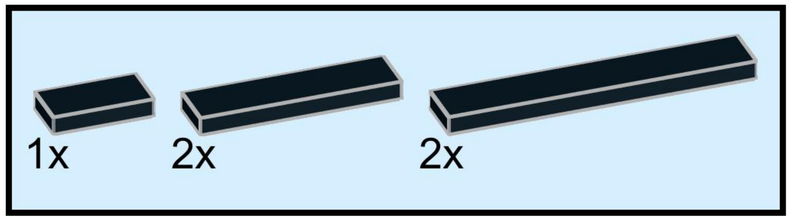
1x
2x
2x

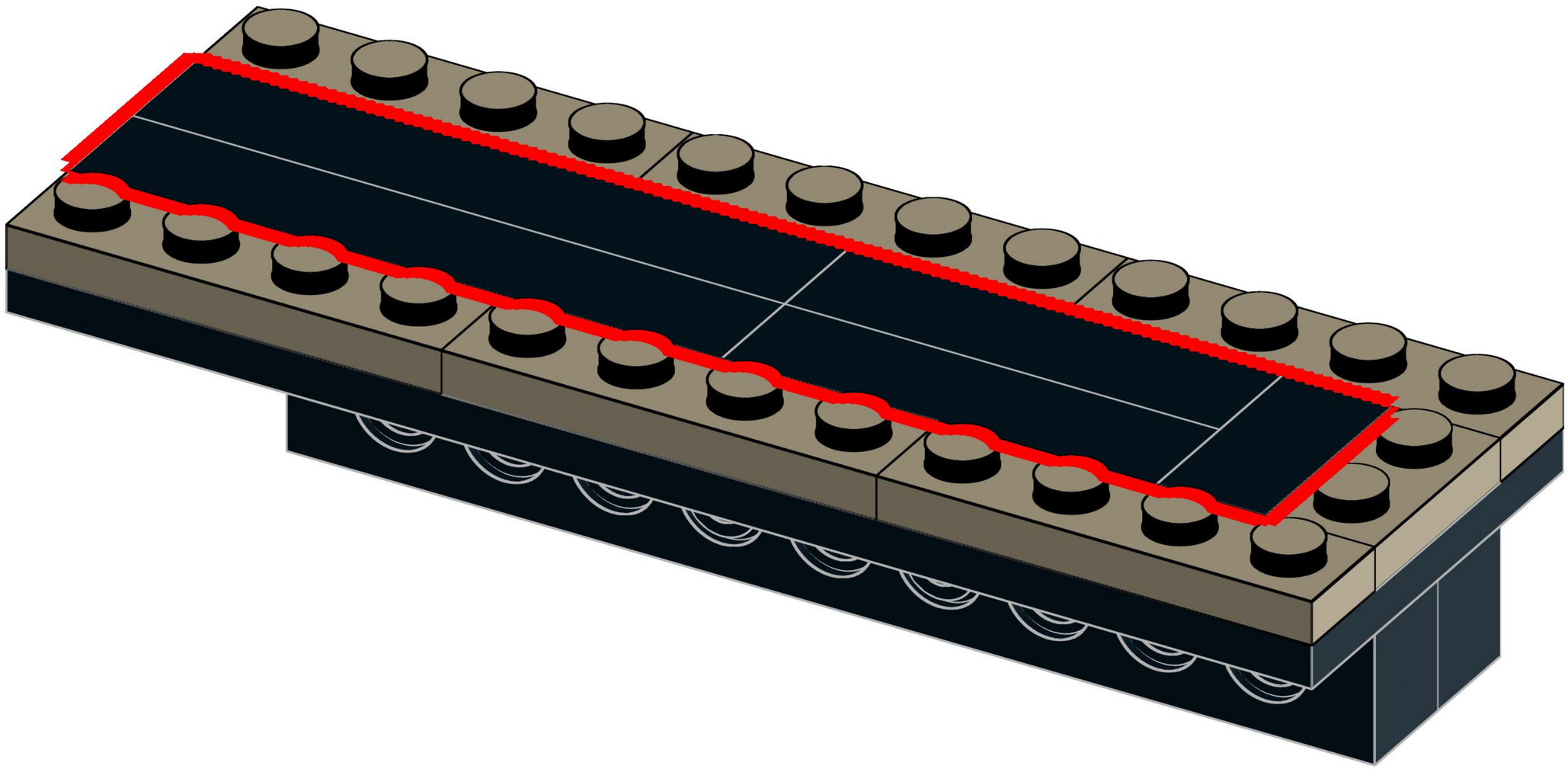

125

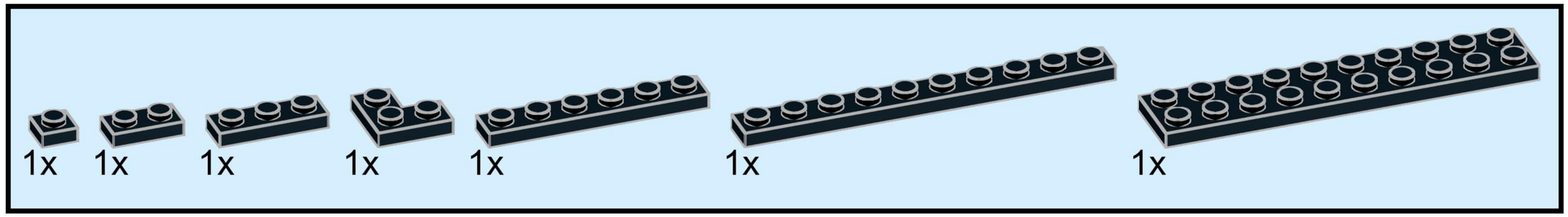

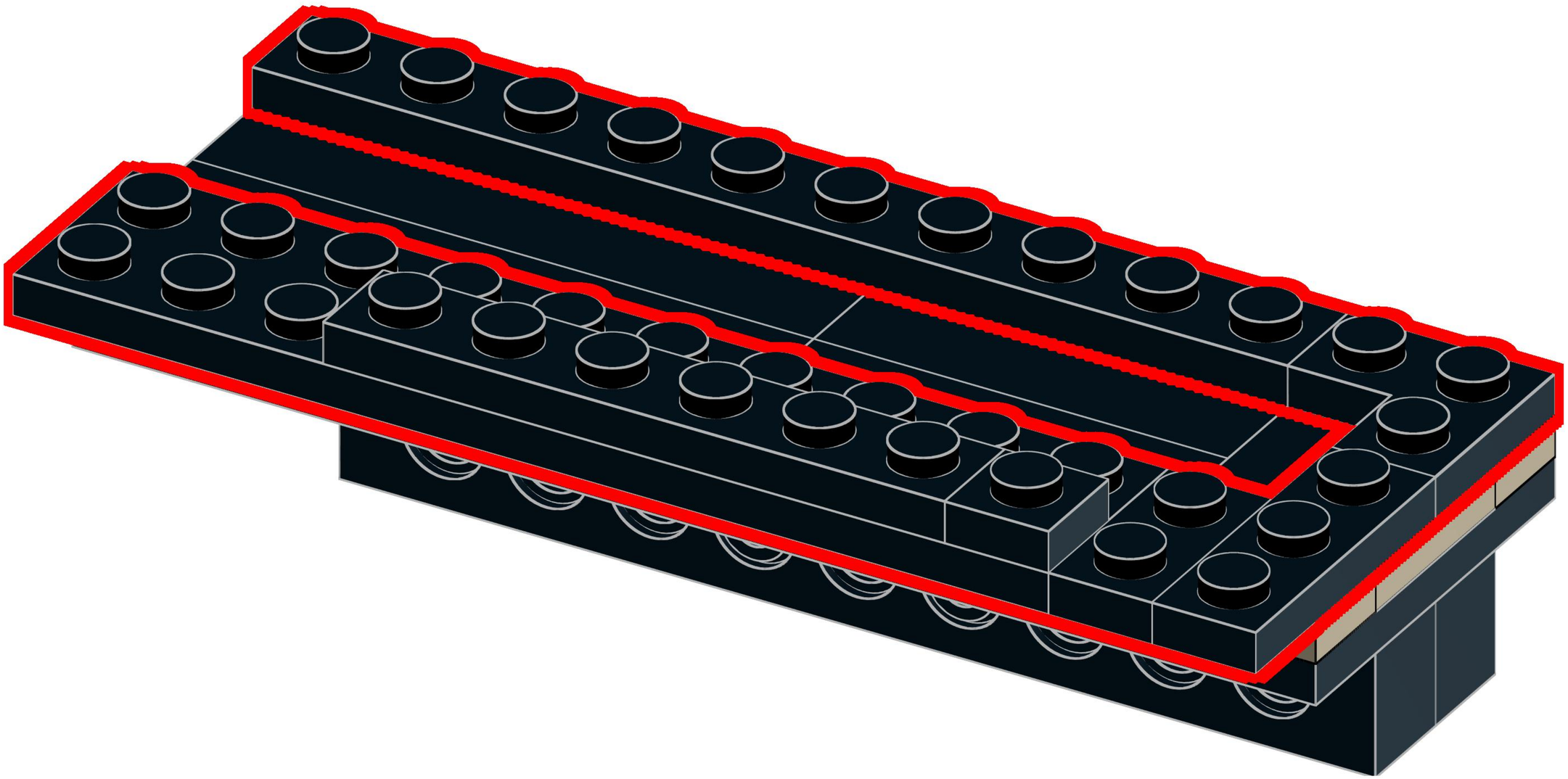

126

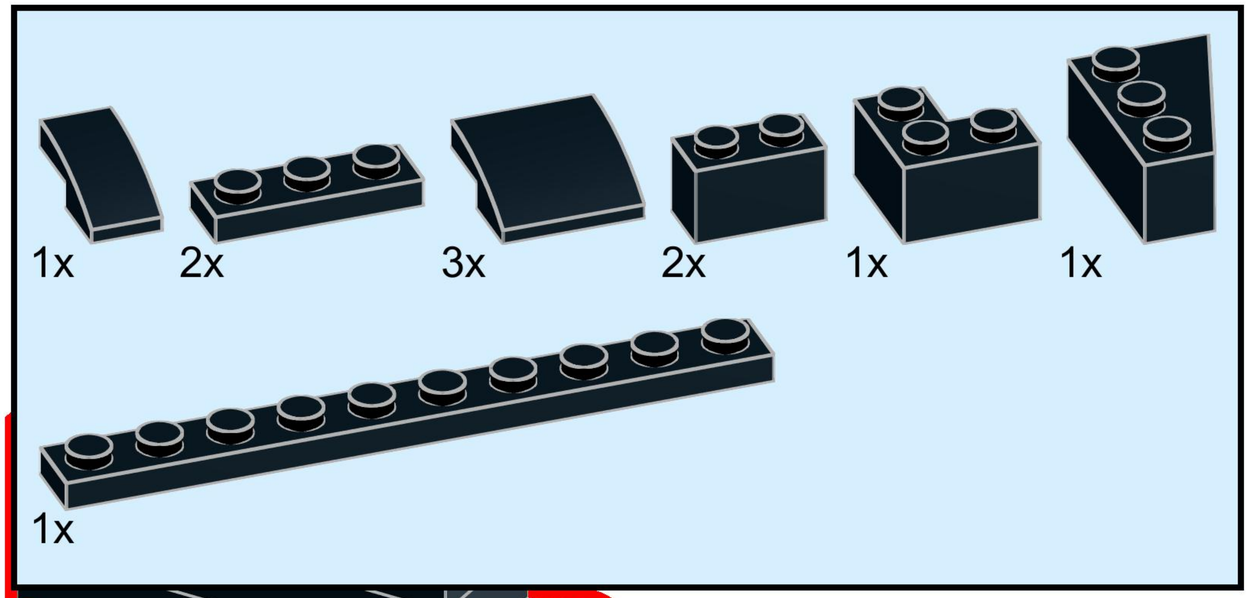

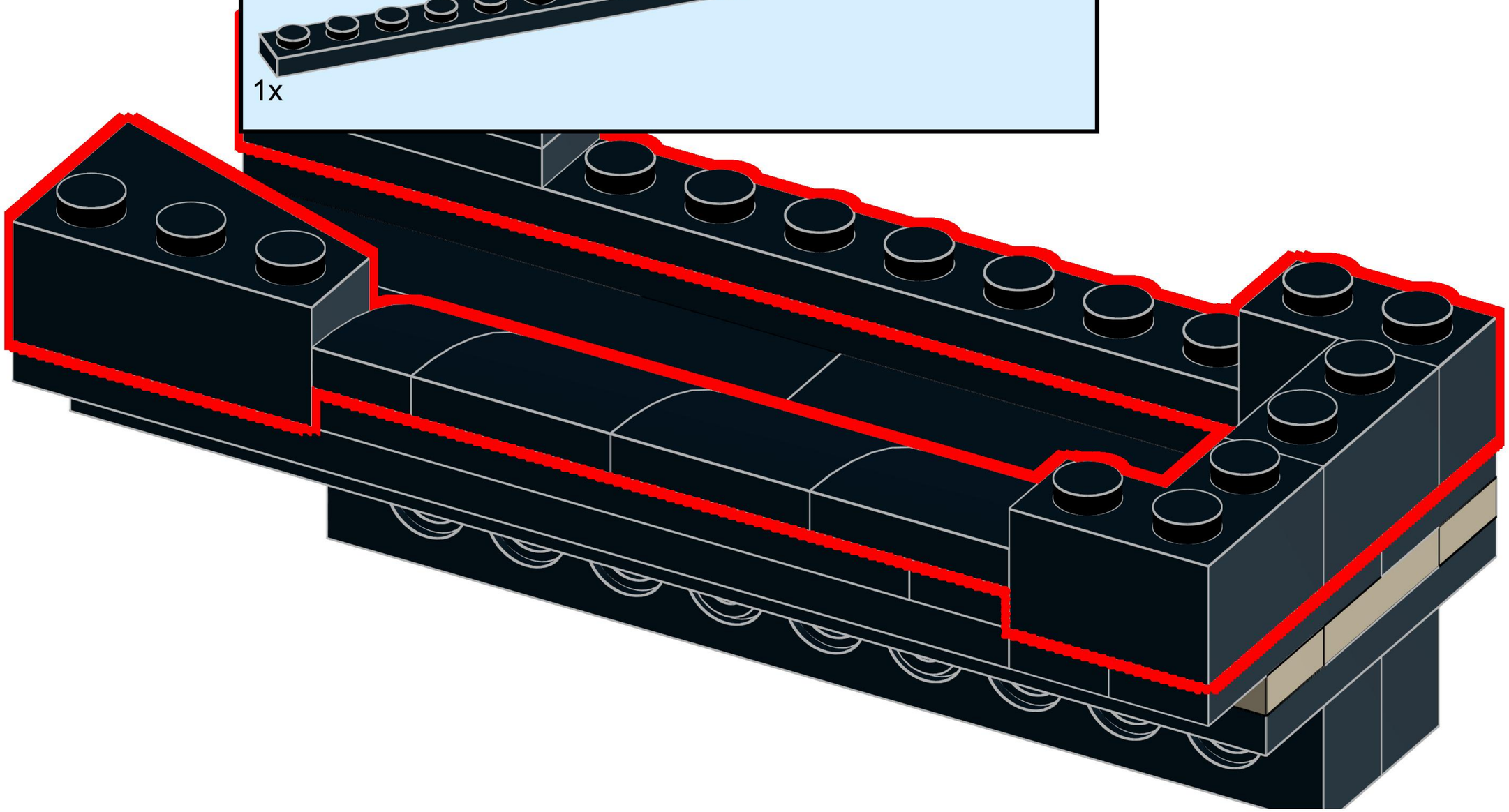

127

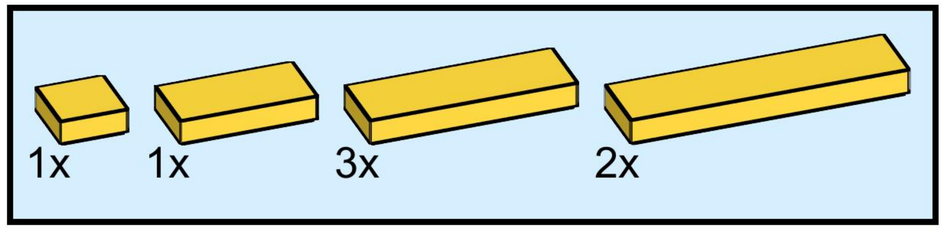

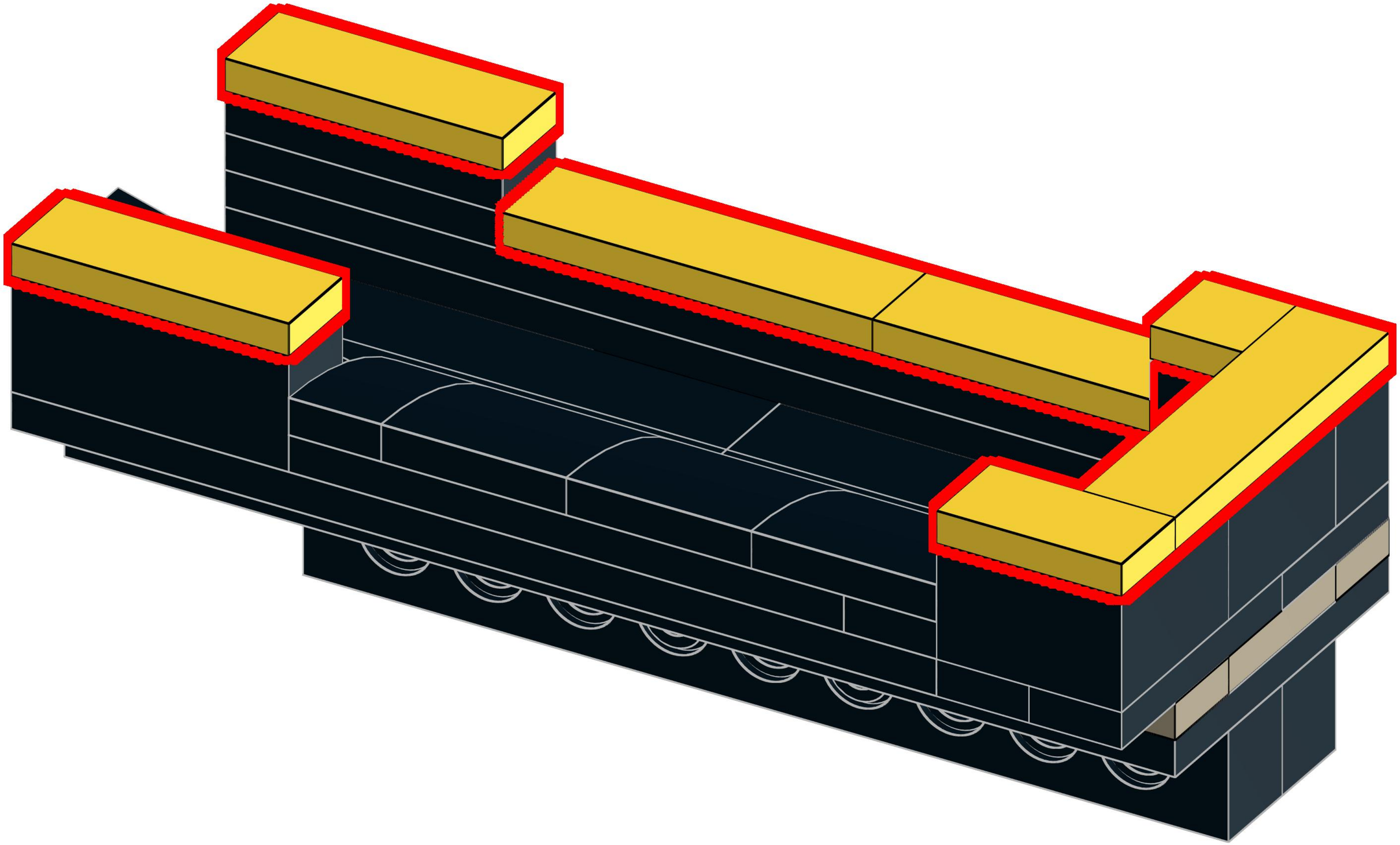

128

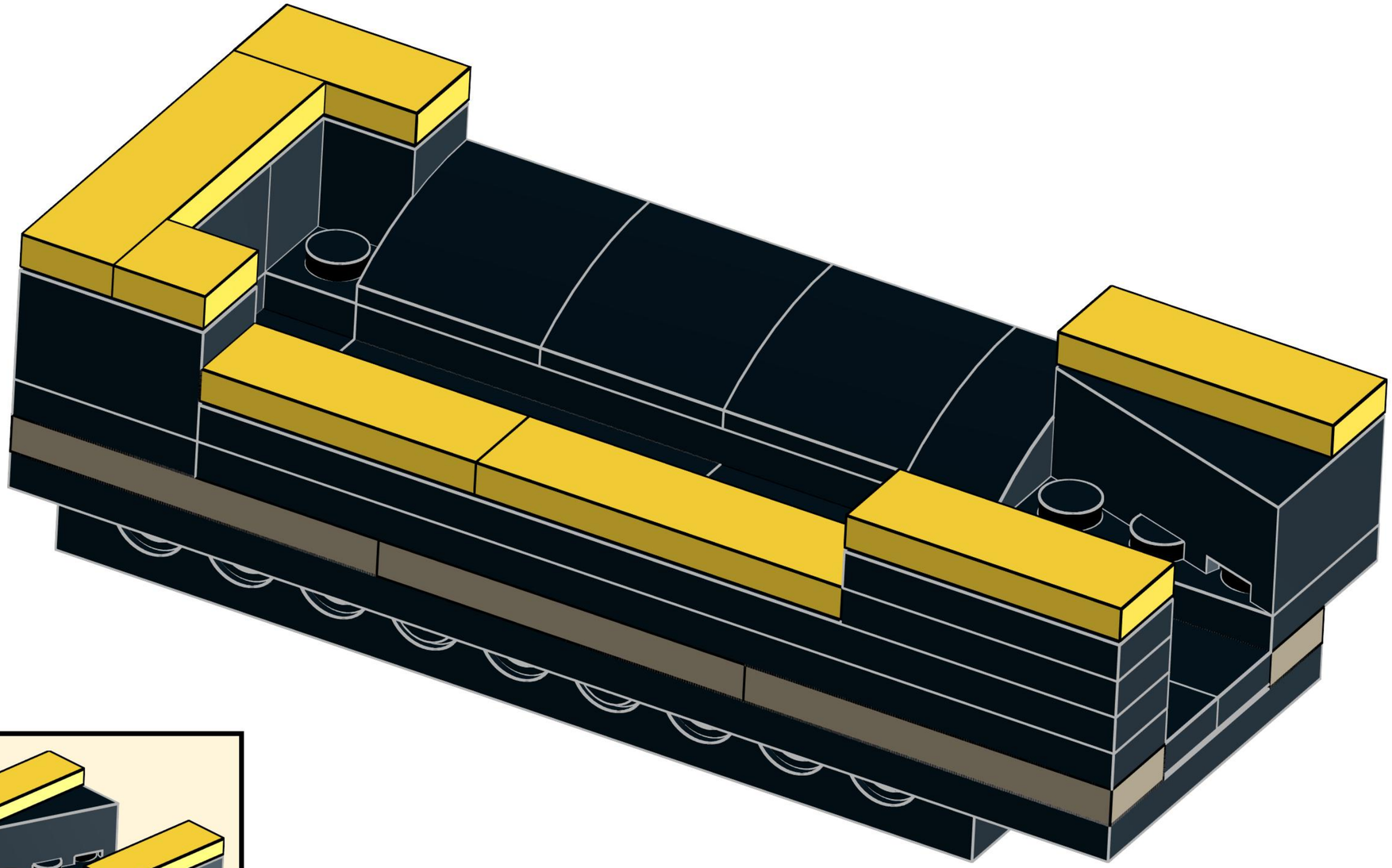

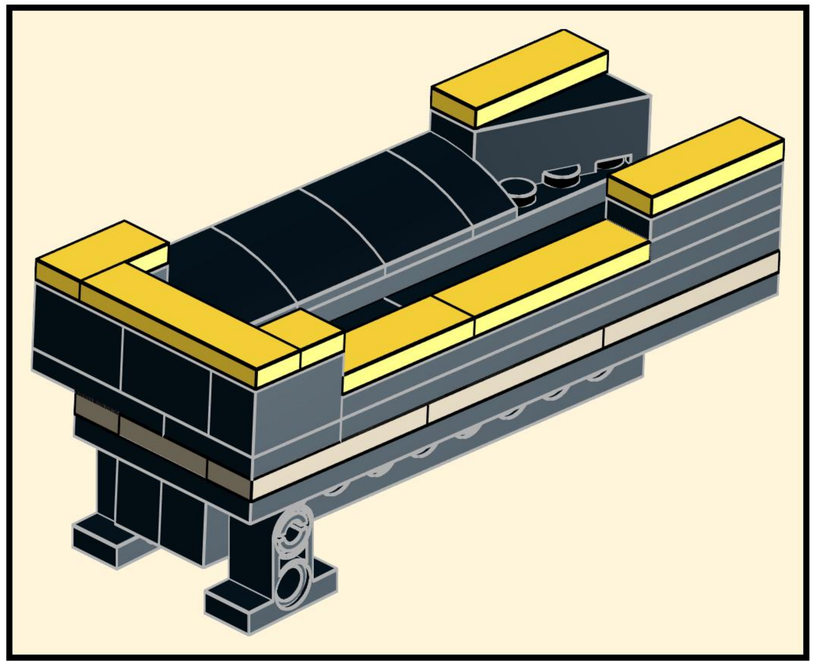

129

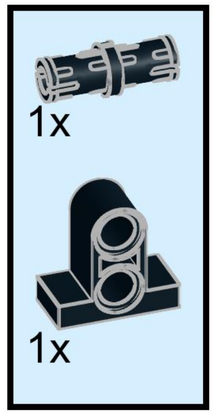

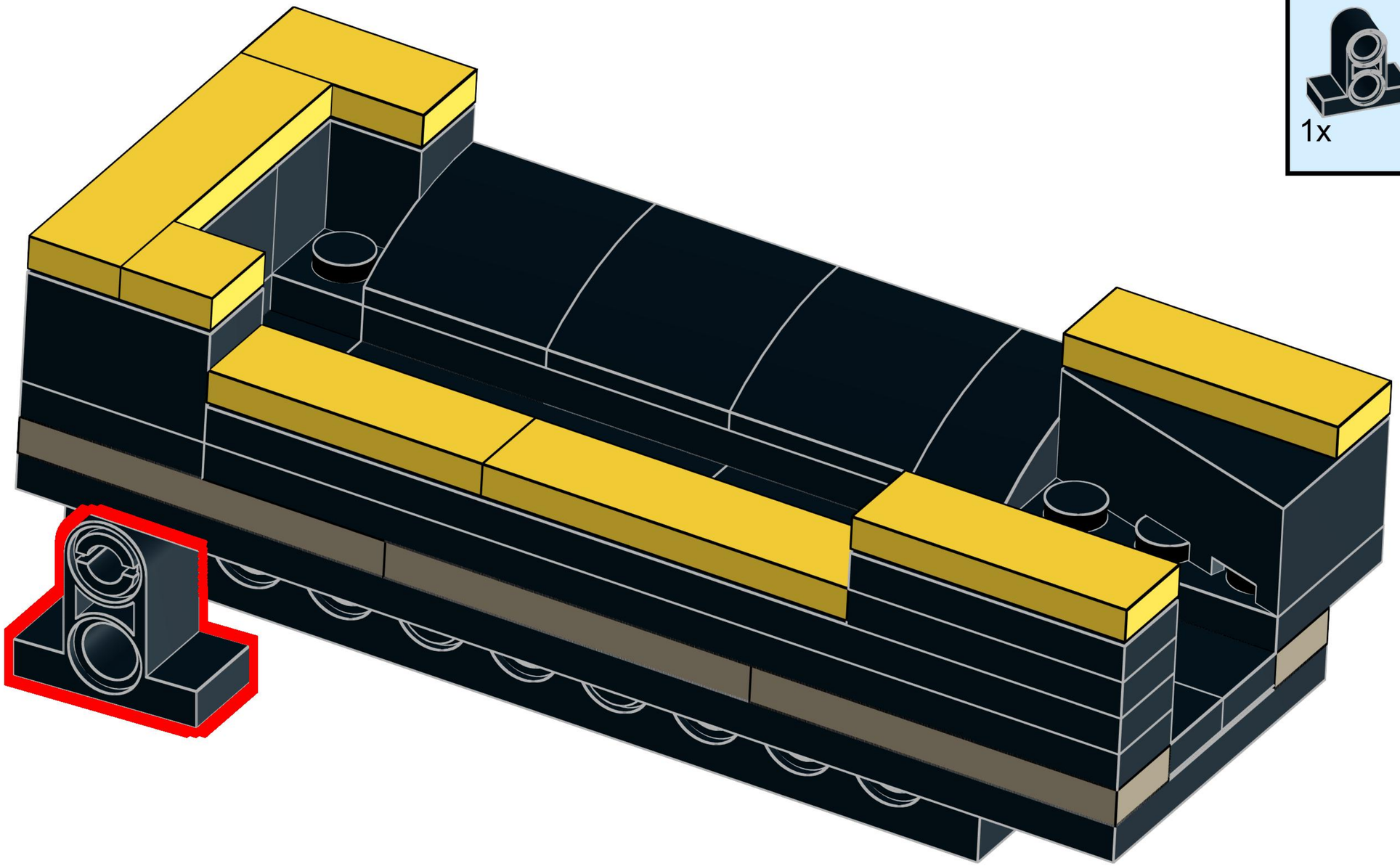

130

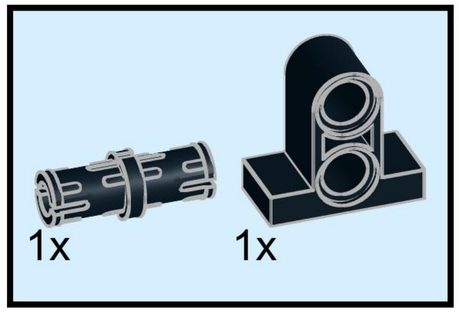

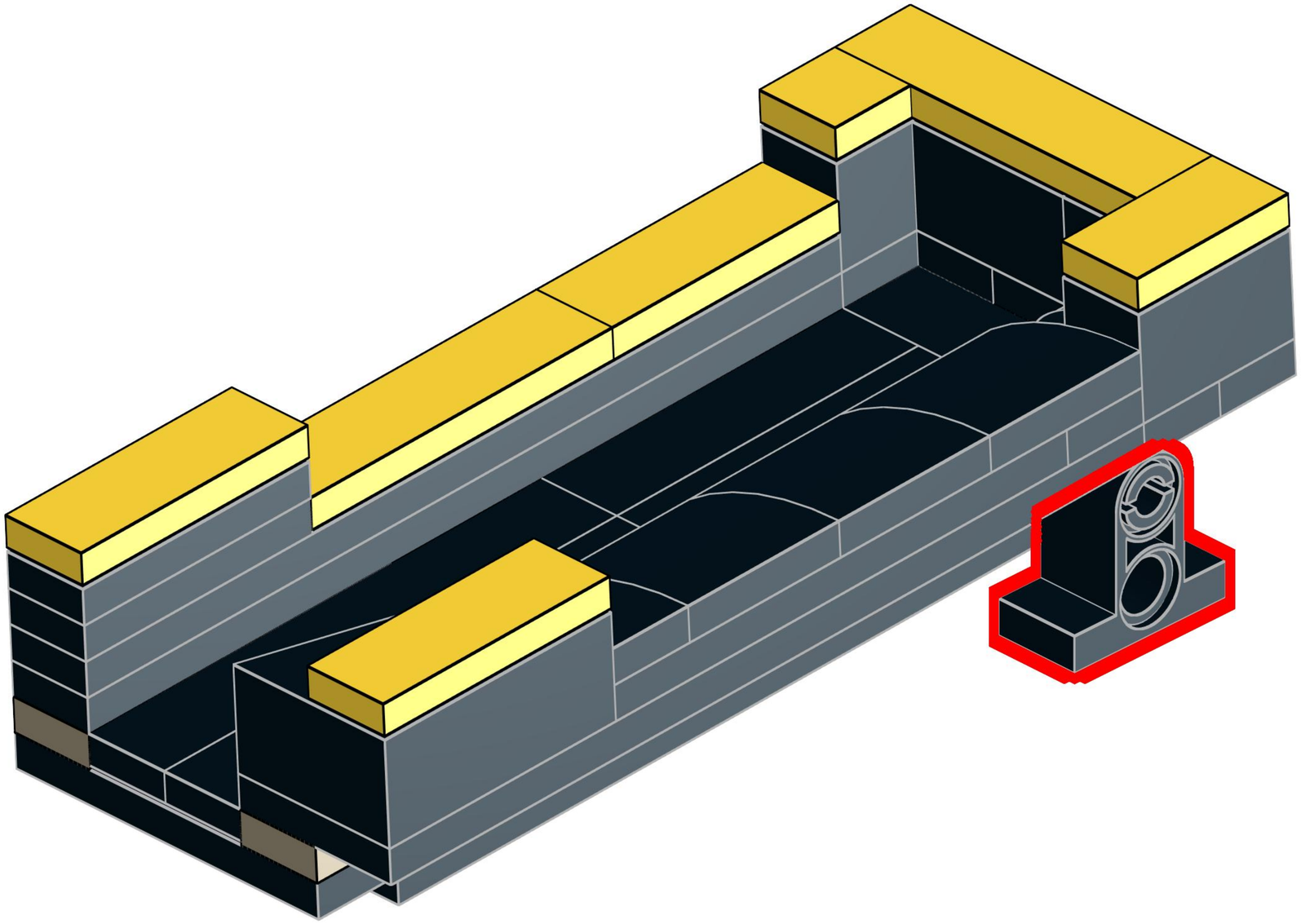

131

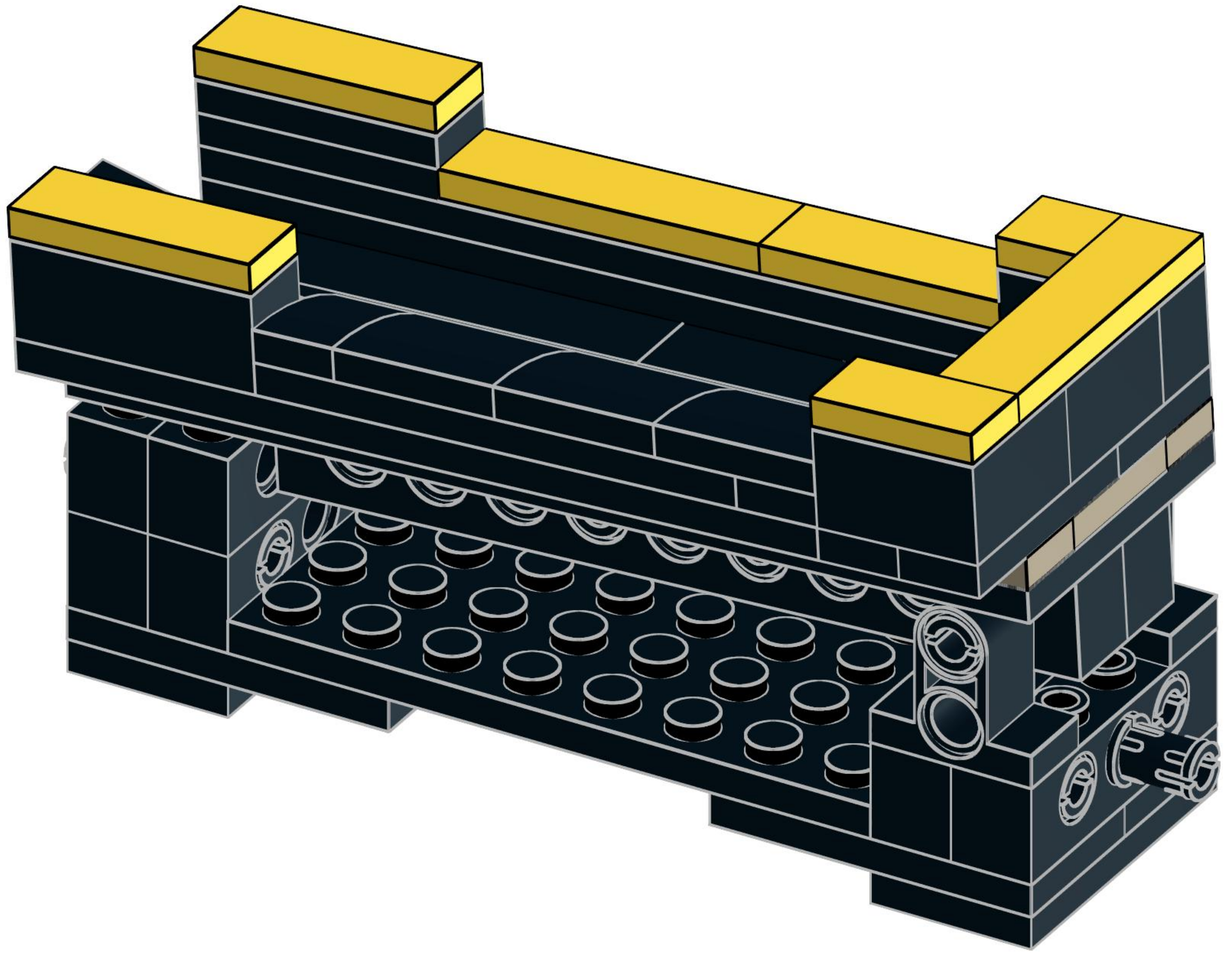

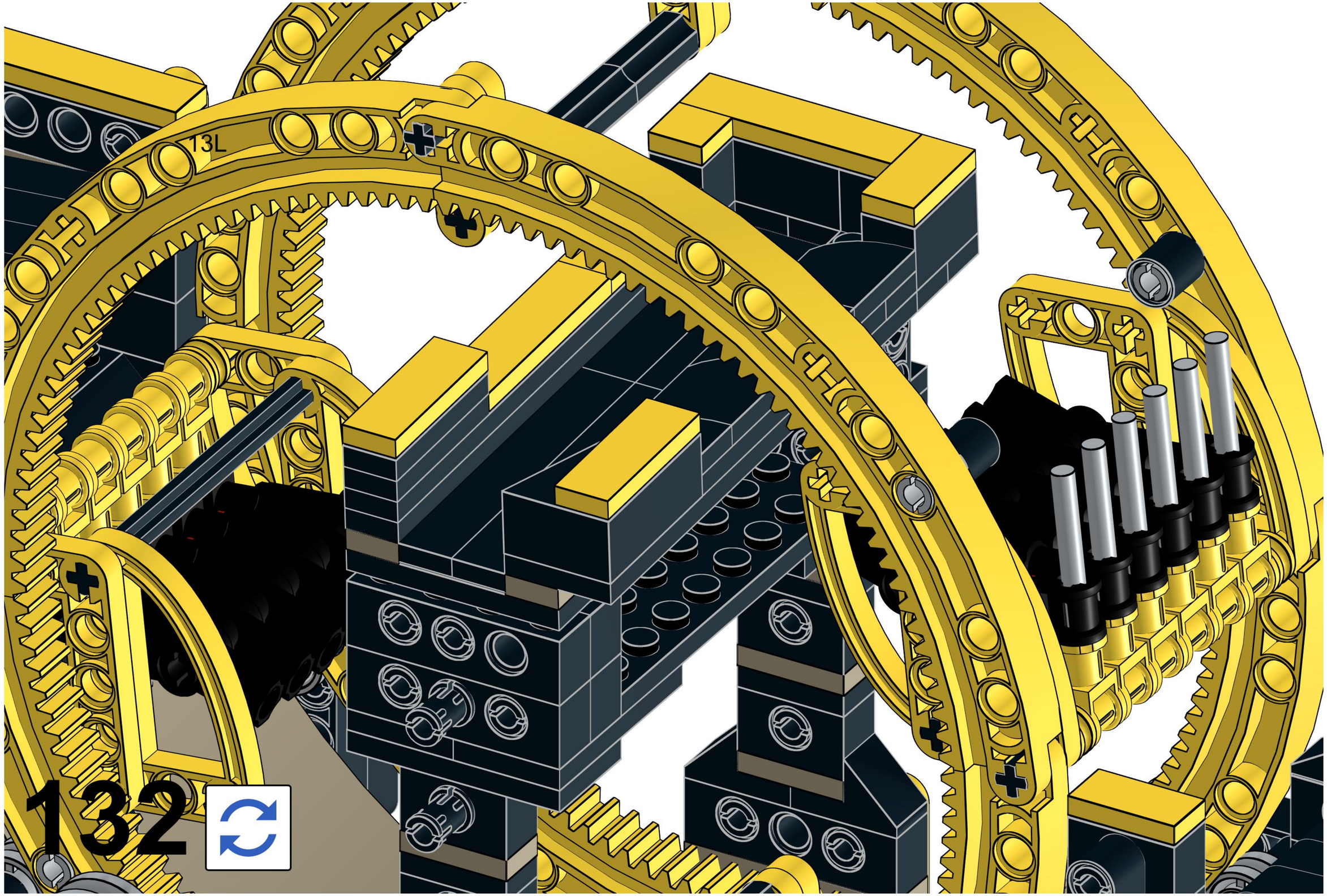
13L
132

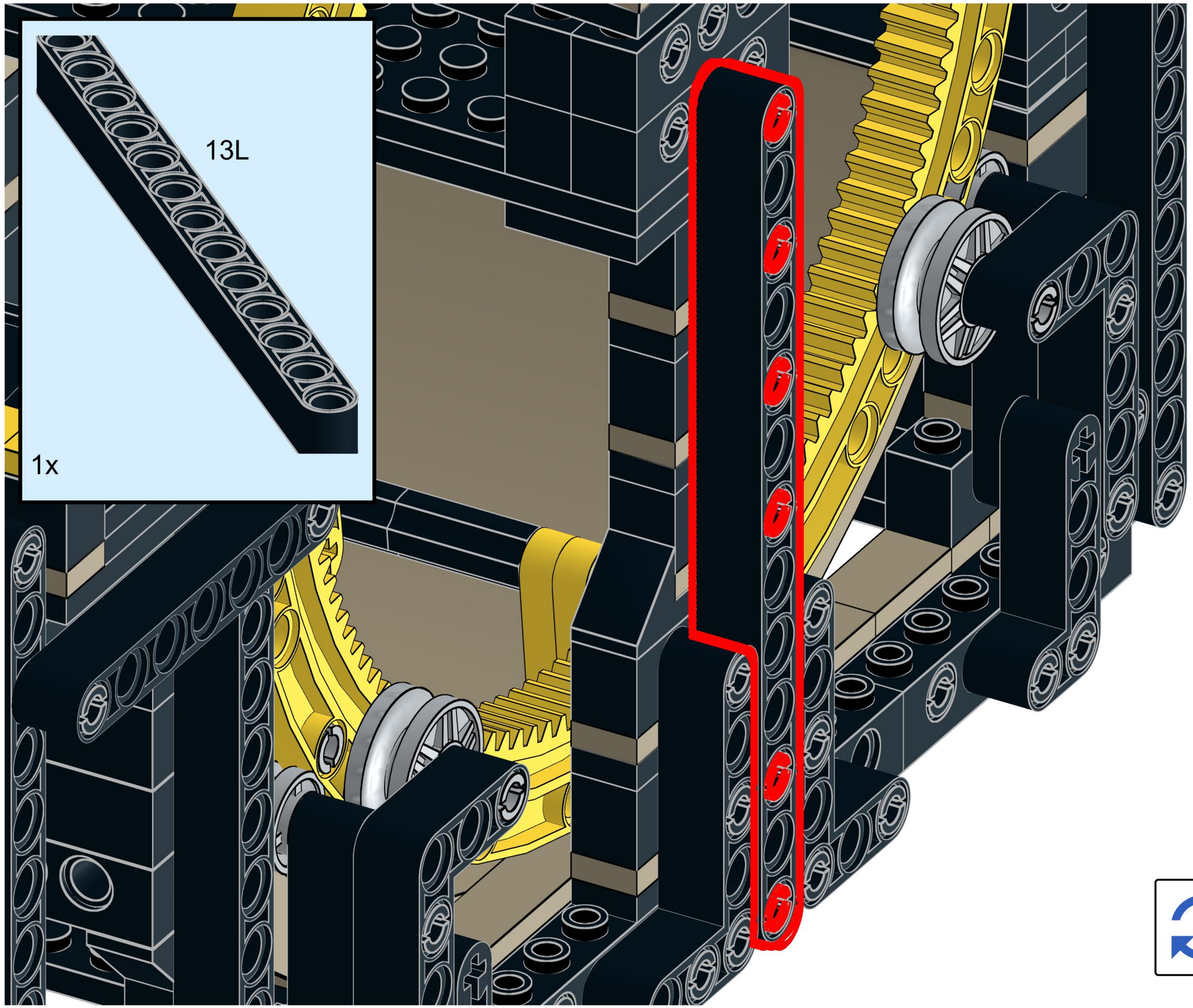

133

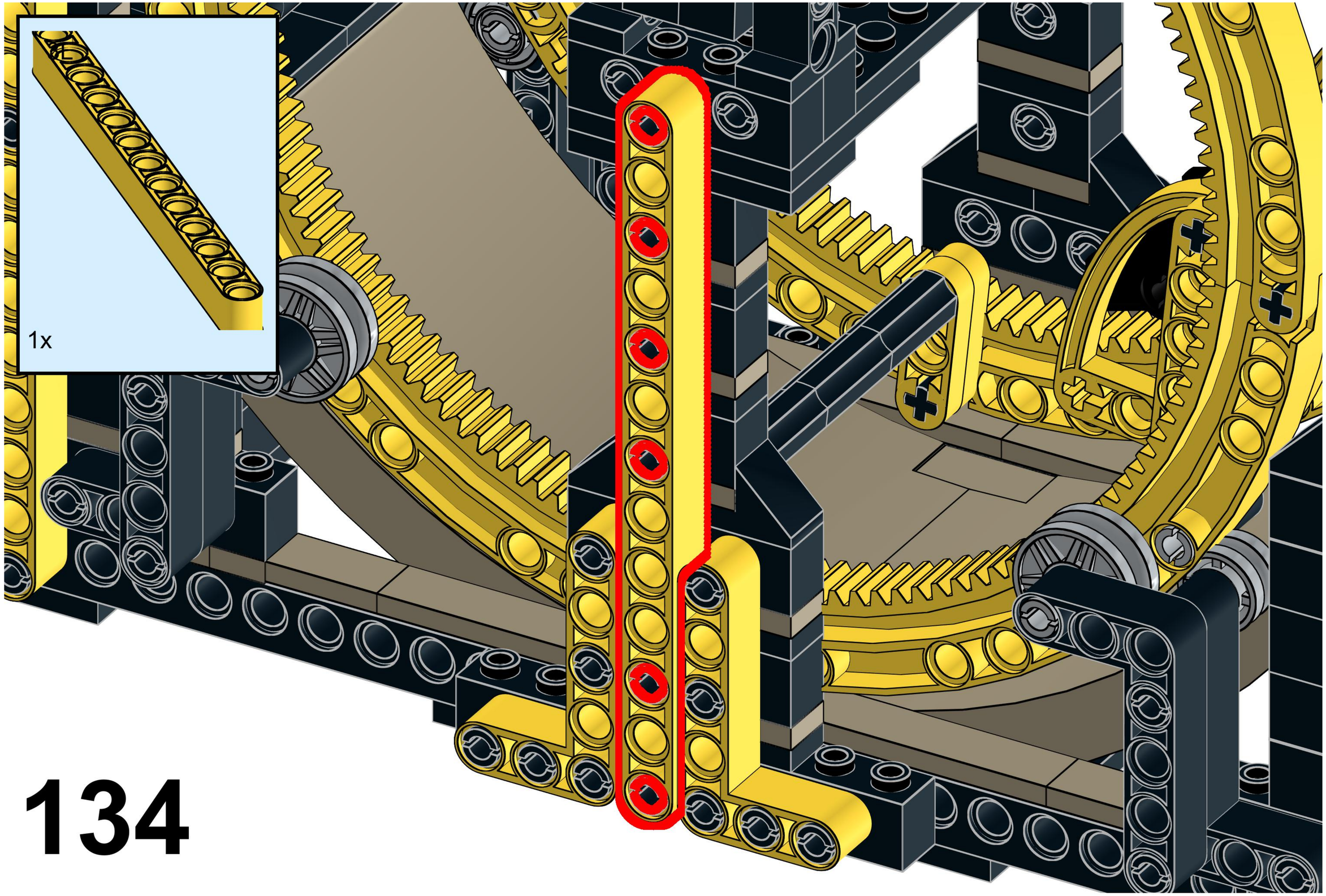

134

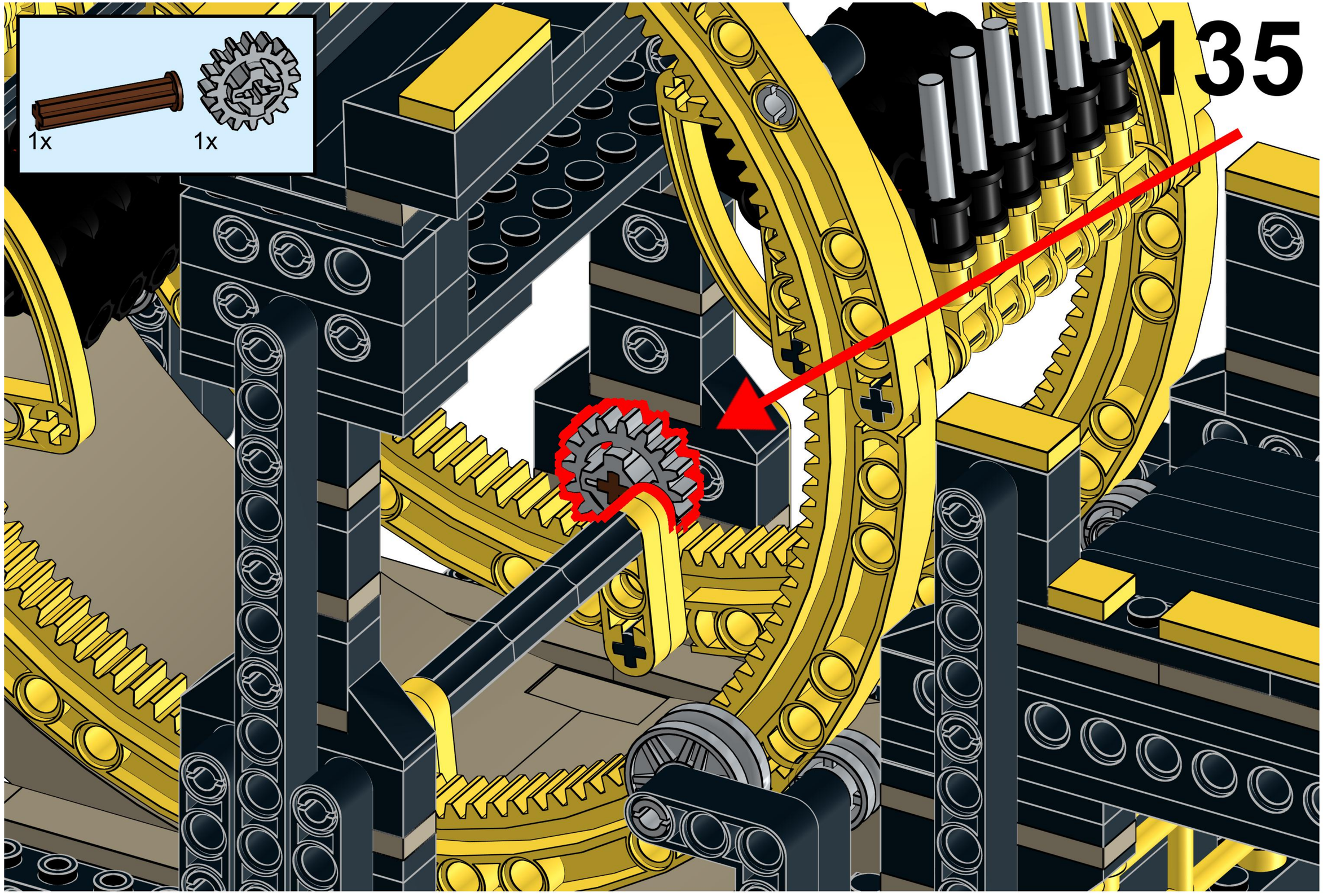
135
1x
1x

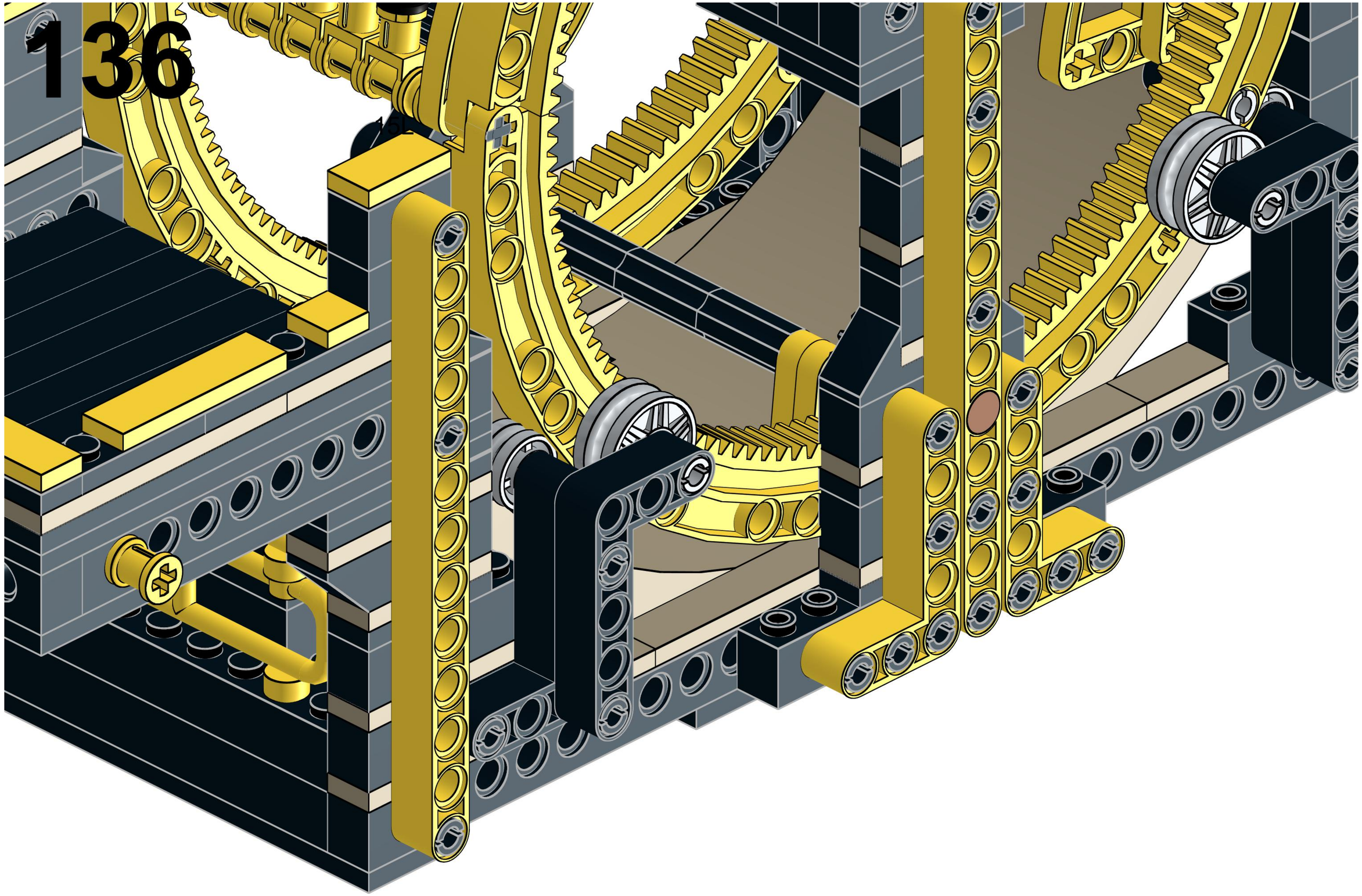
136

137

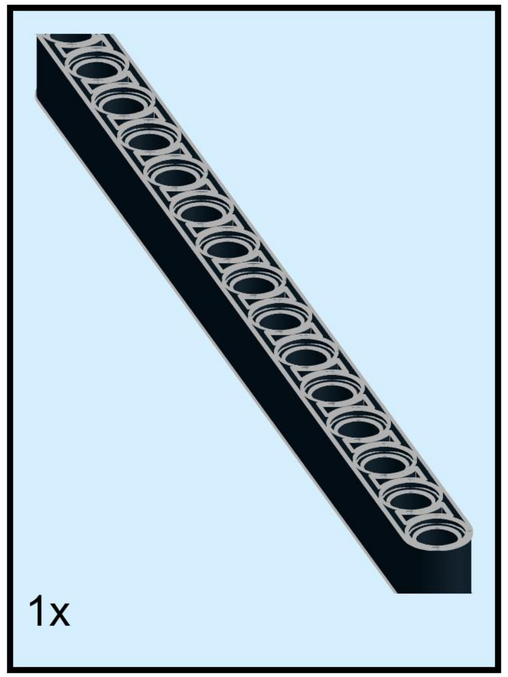

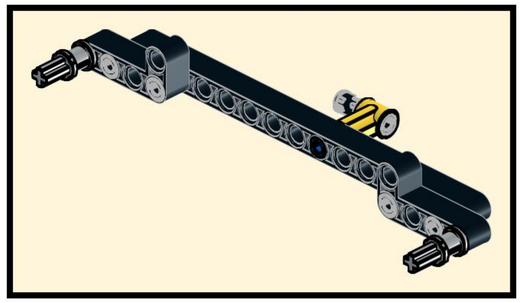

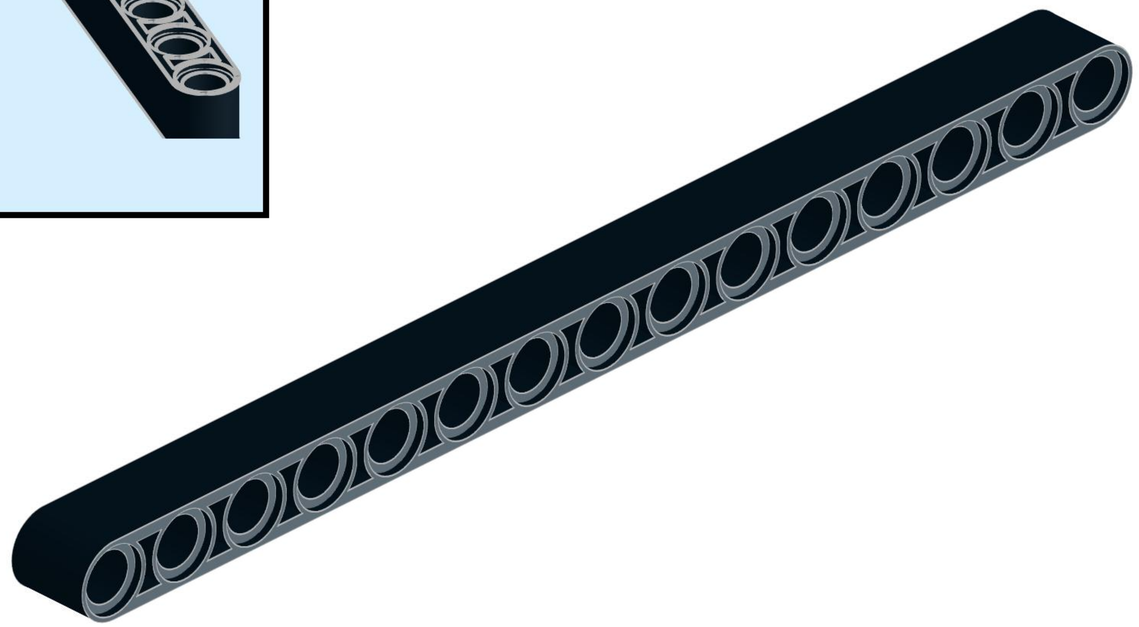

138

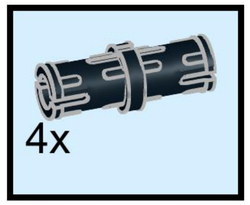

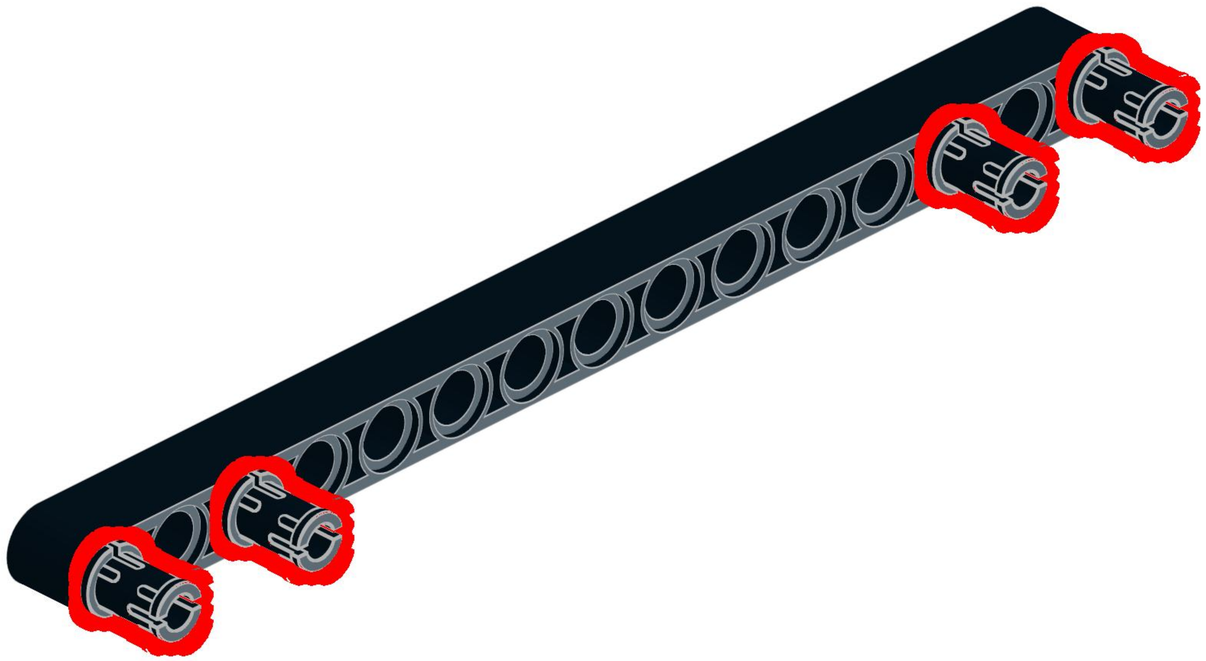

139

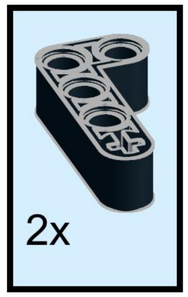

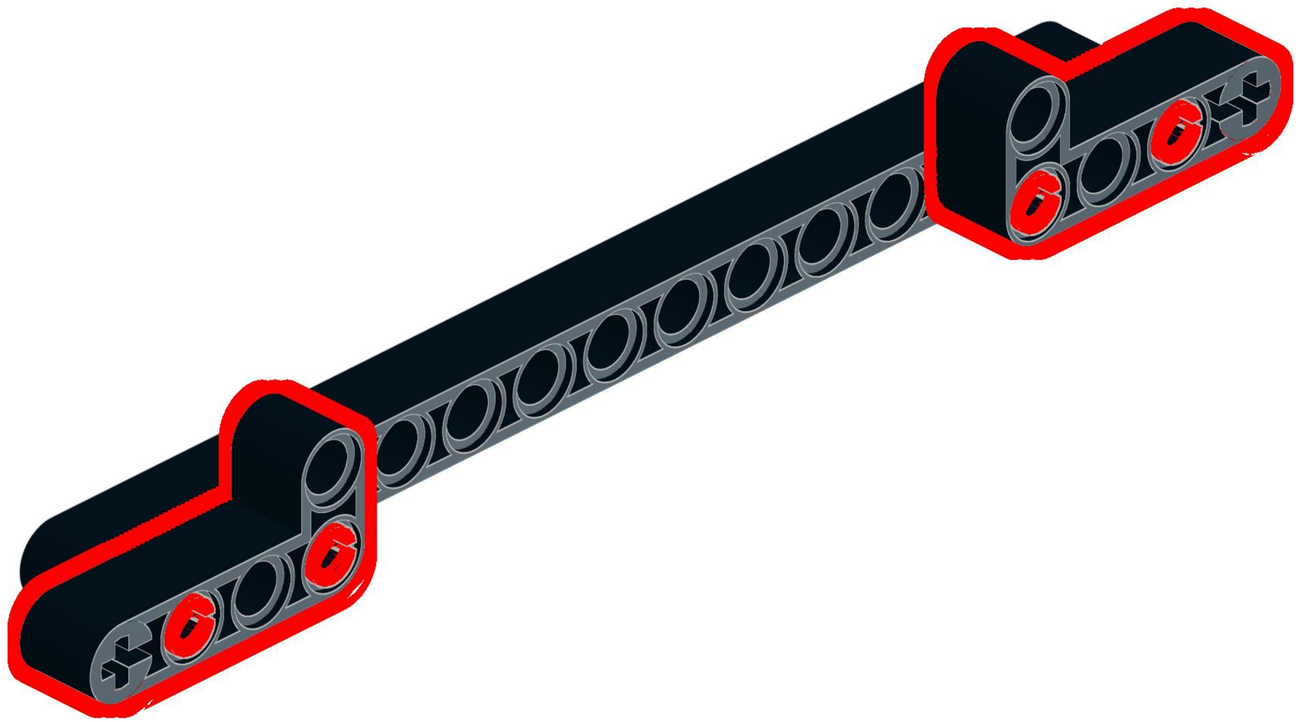

140

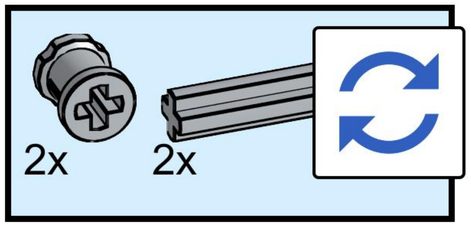

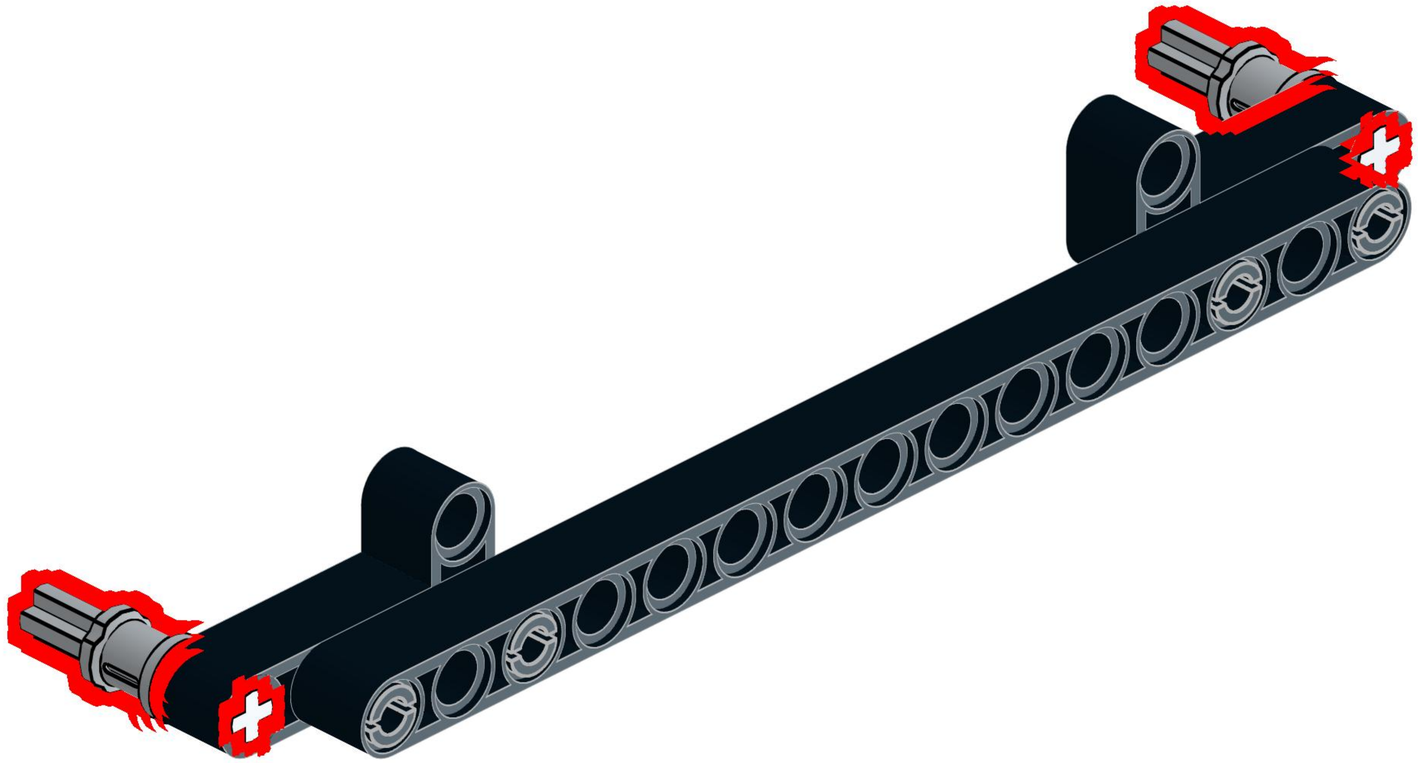

141

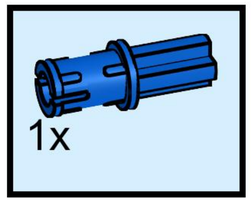

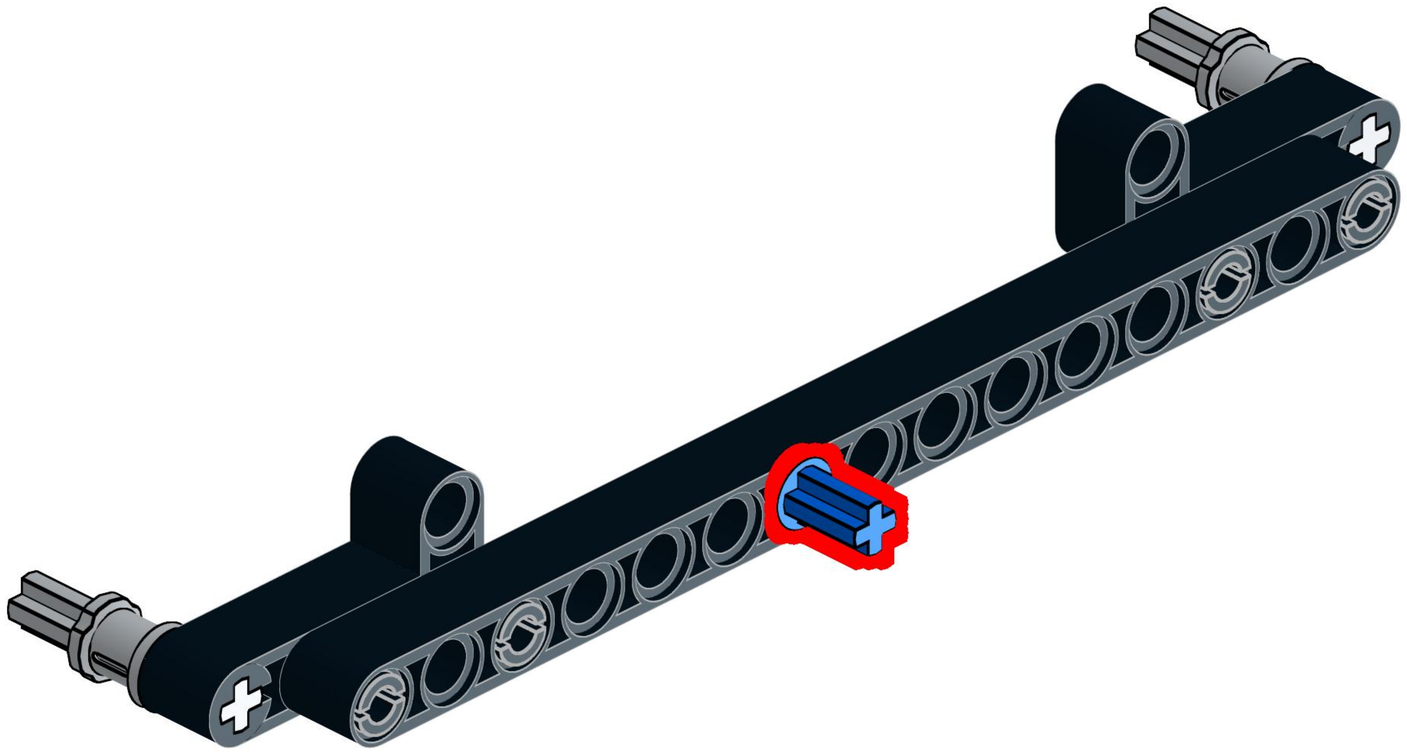

142

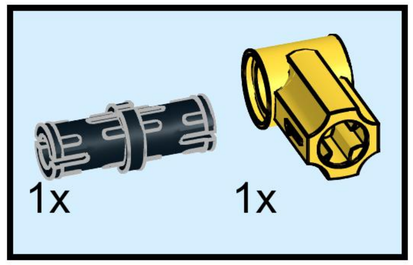

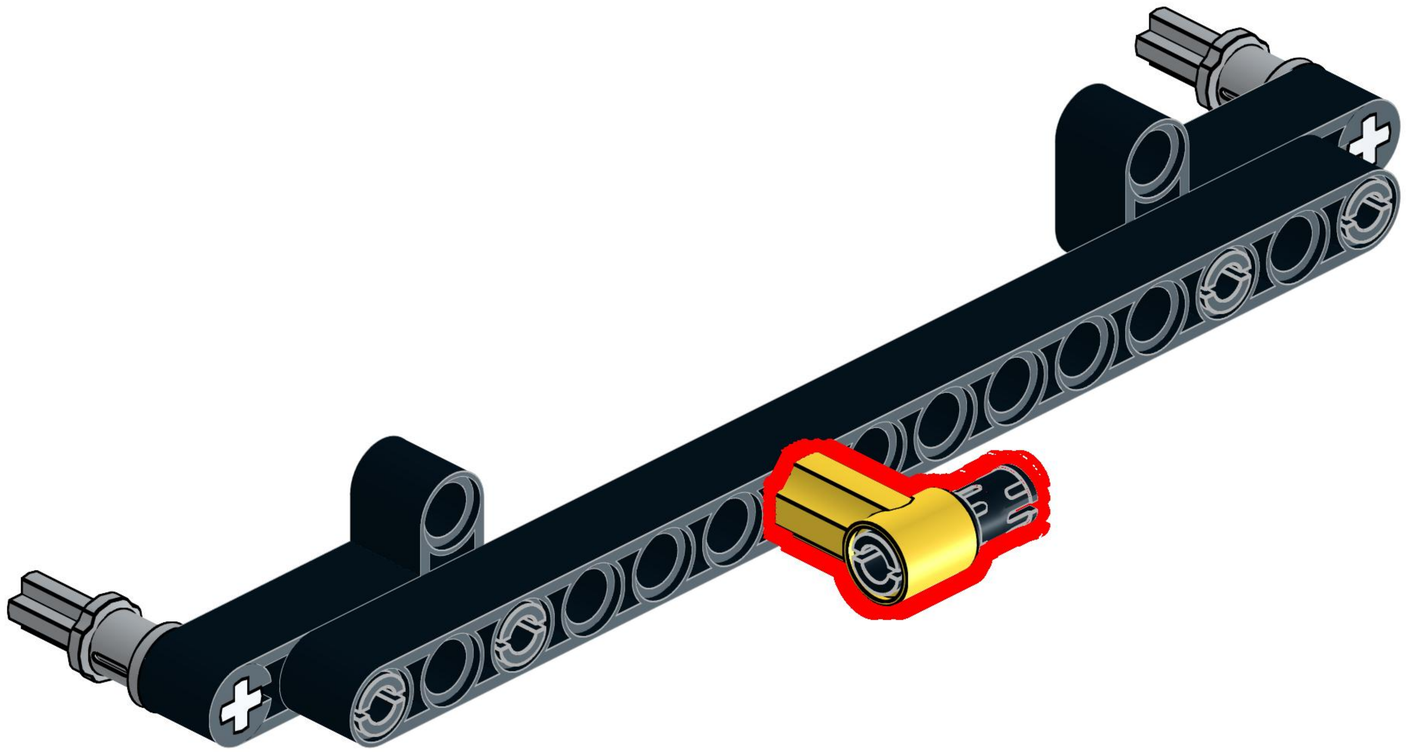

143

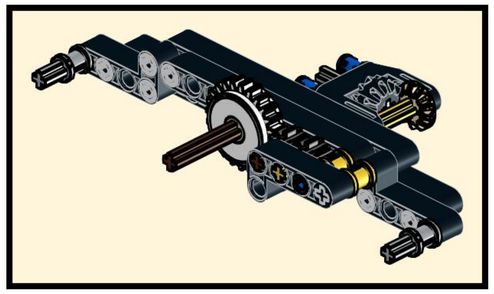

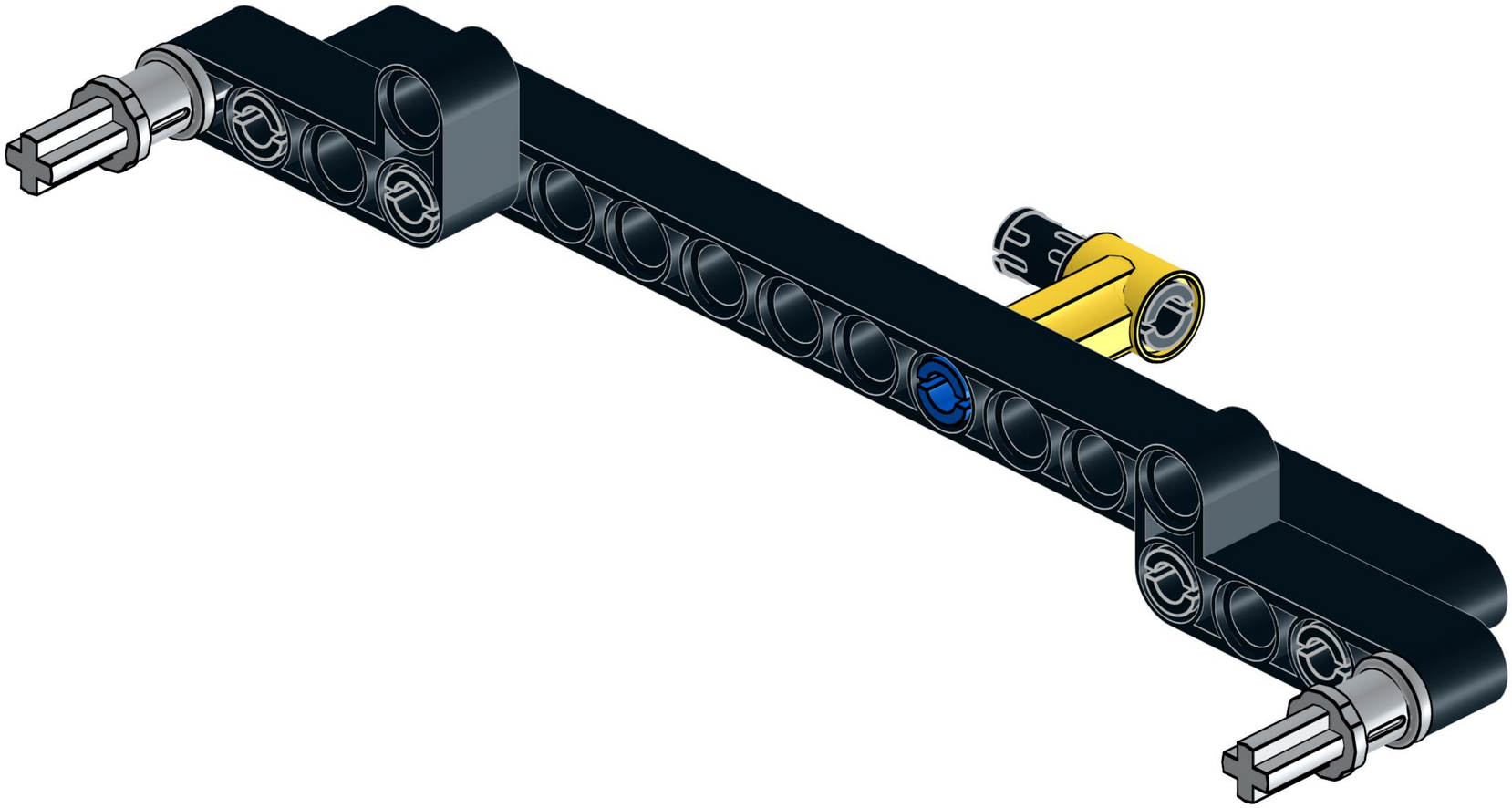

144

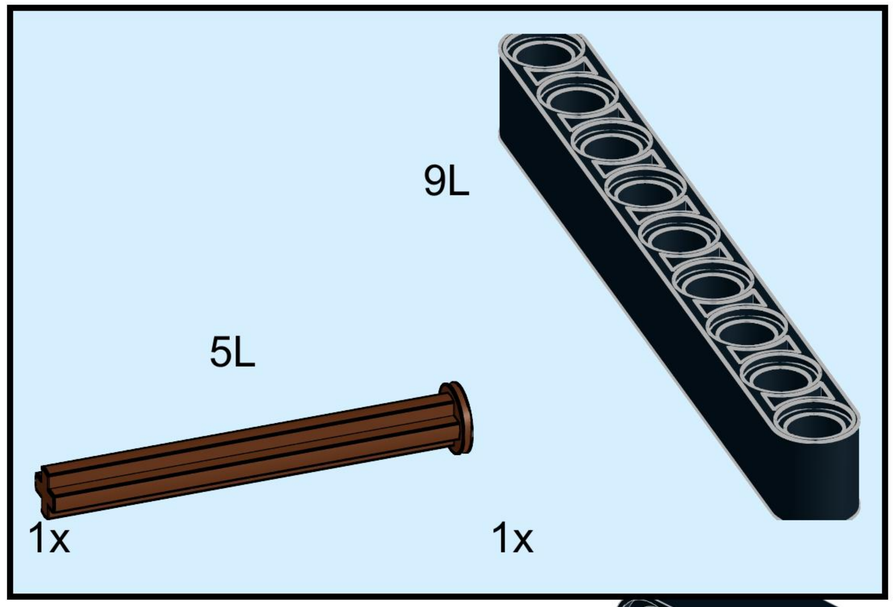

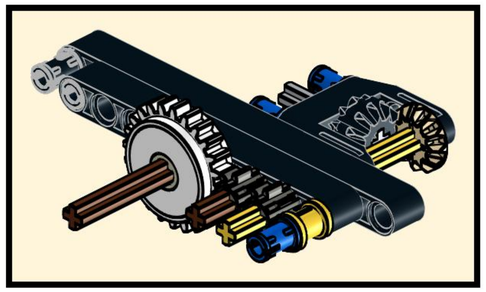

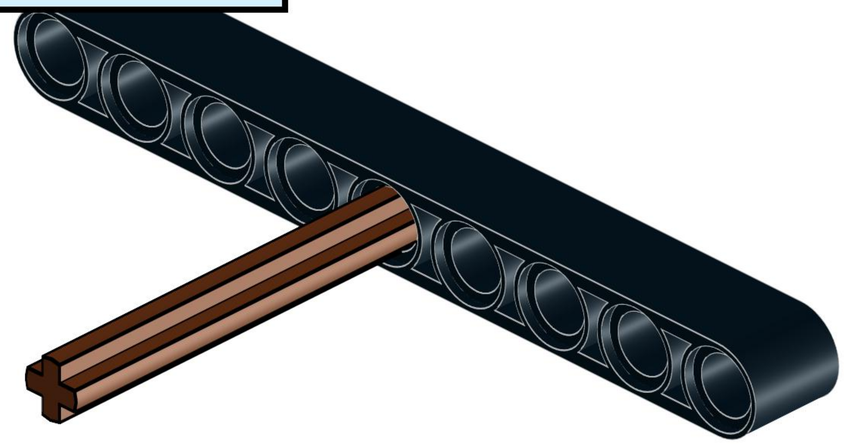

145

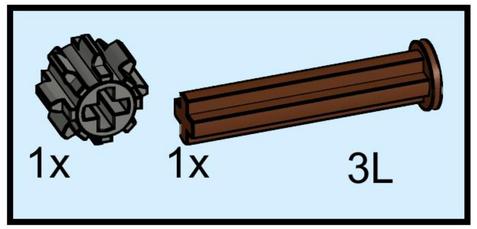

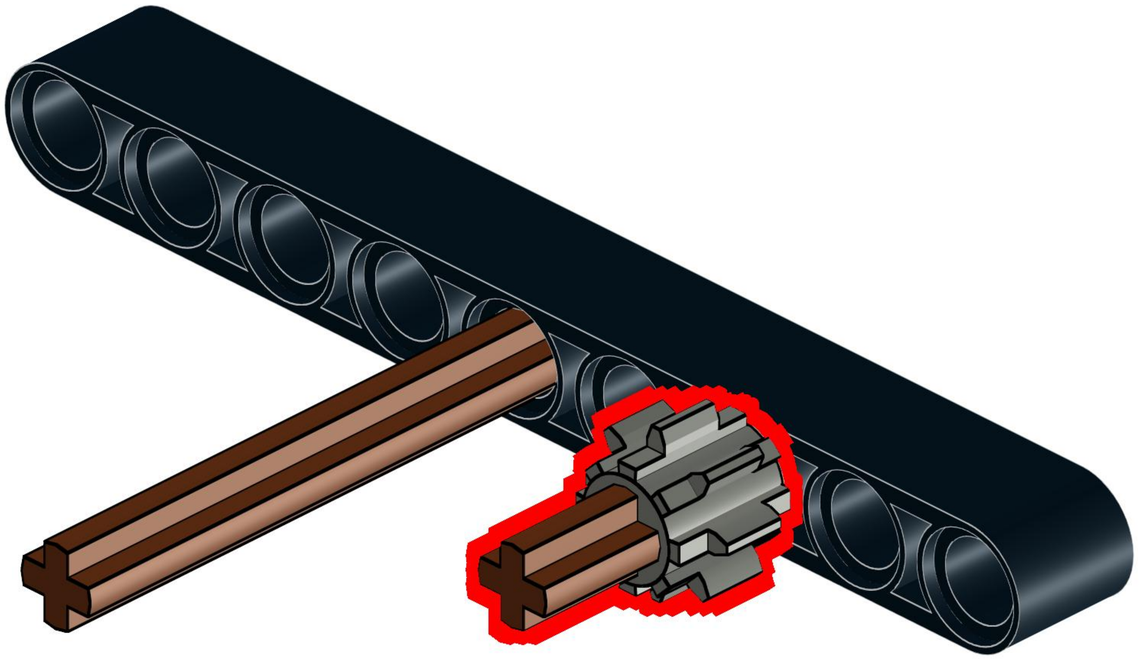

146

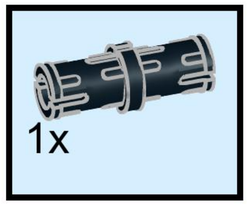

11L

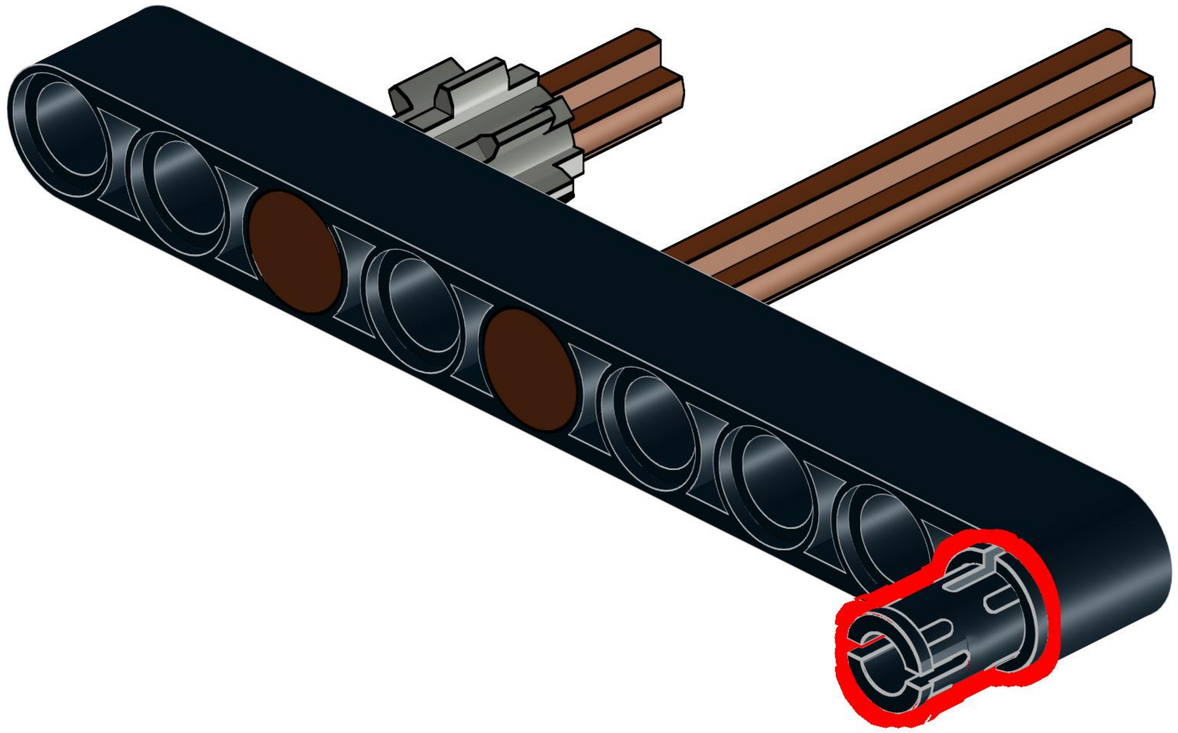

147

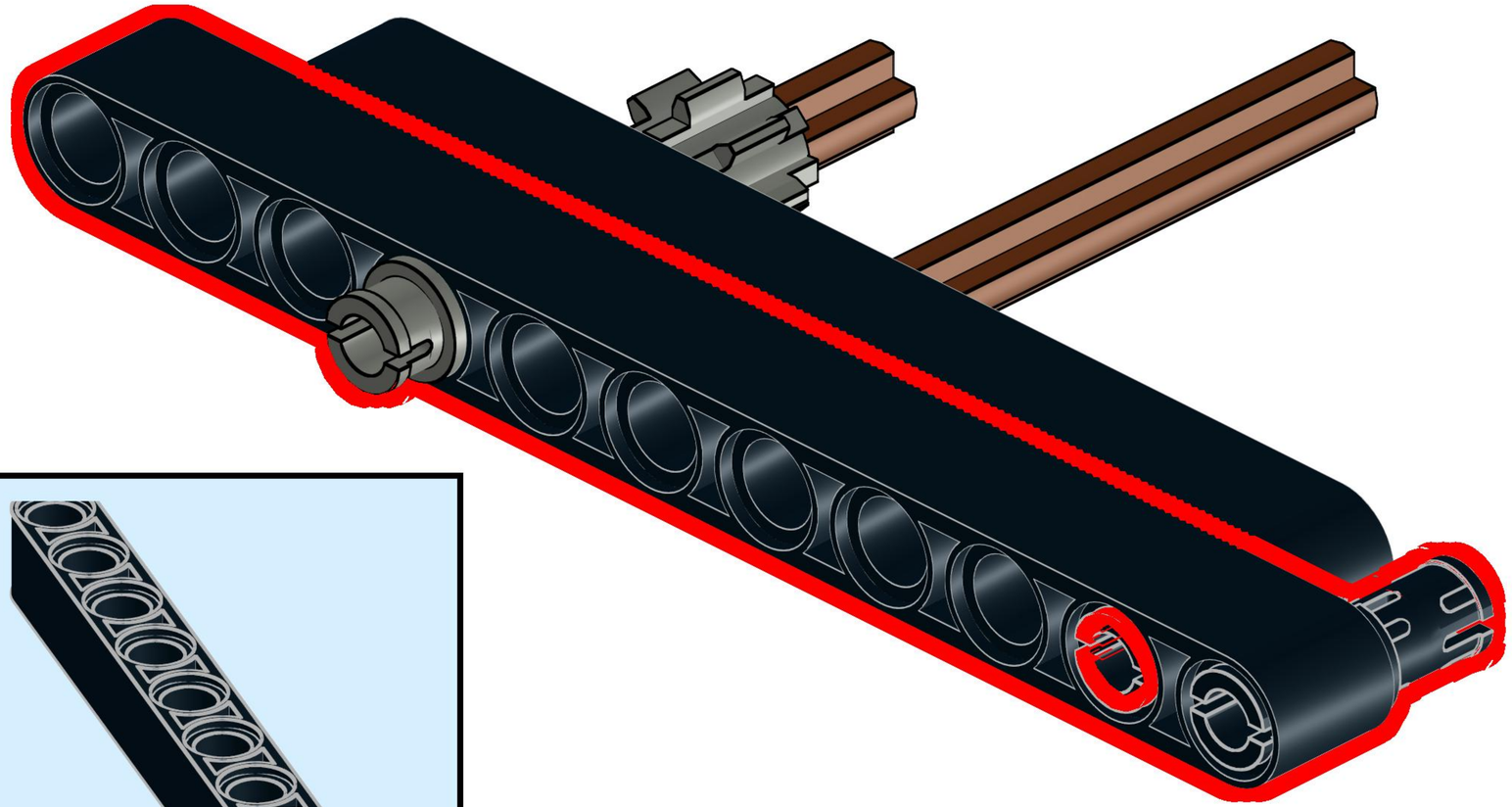

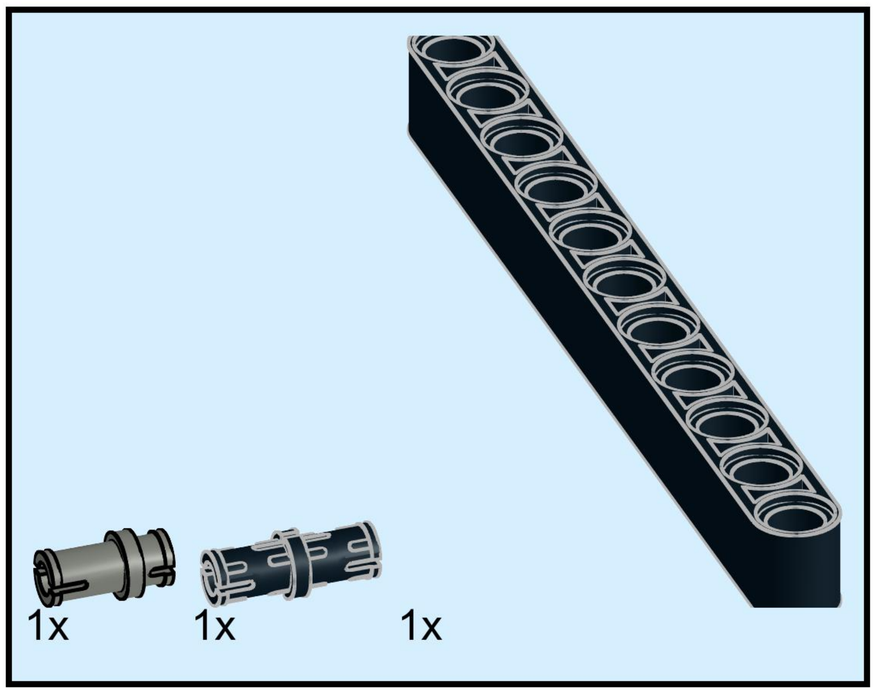

148

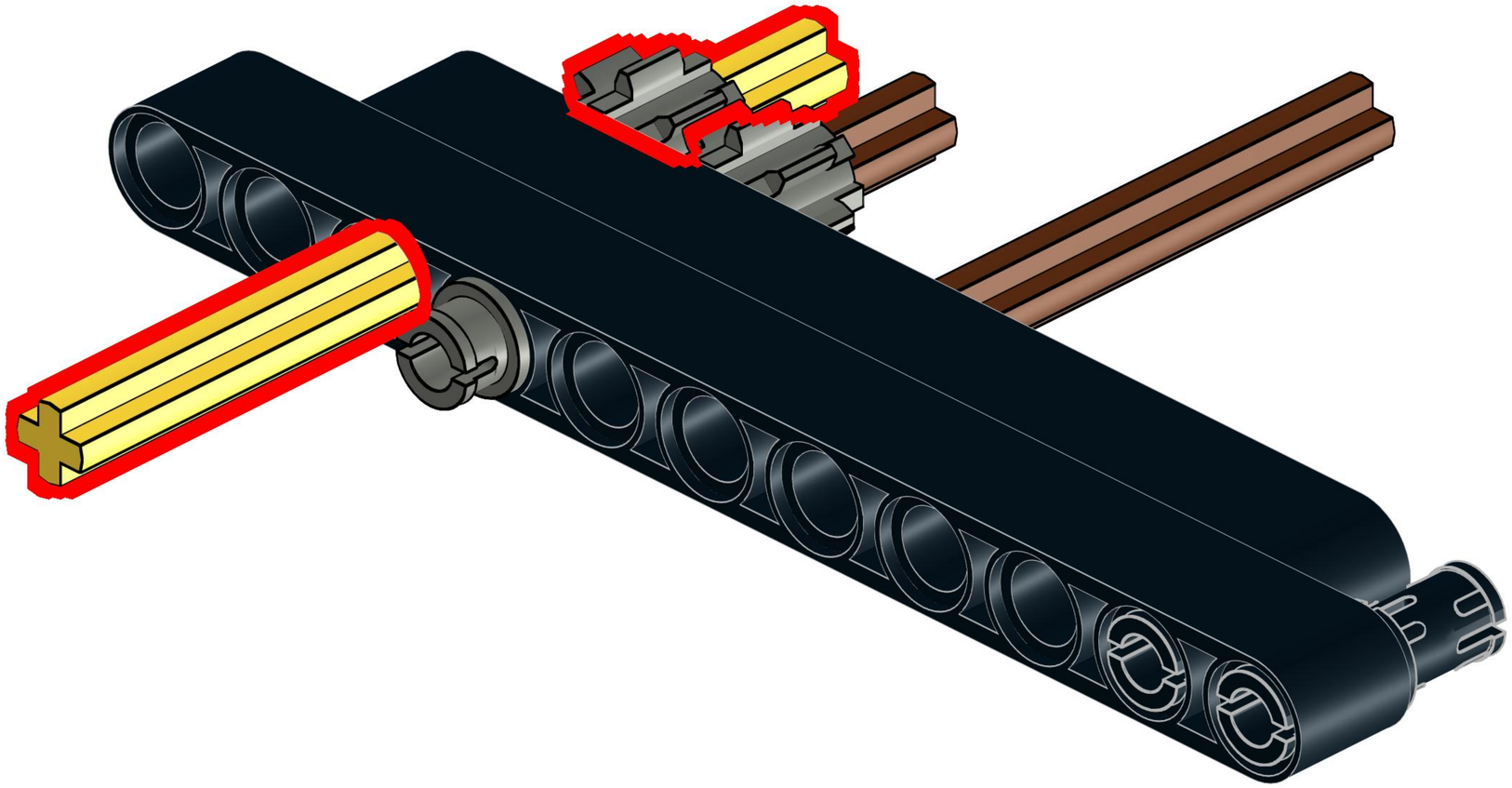

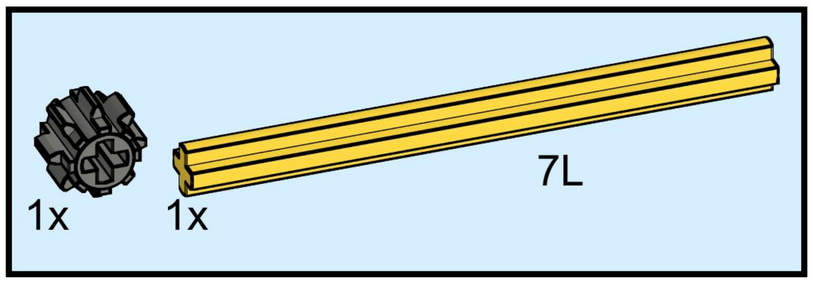

149

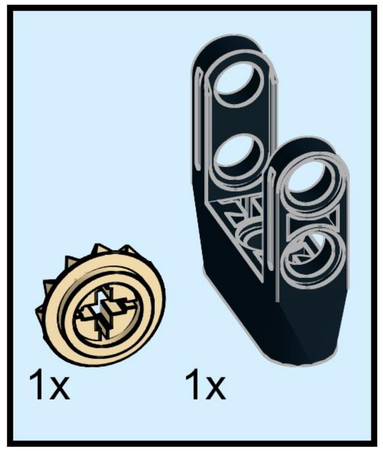

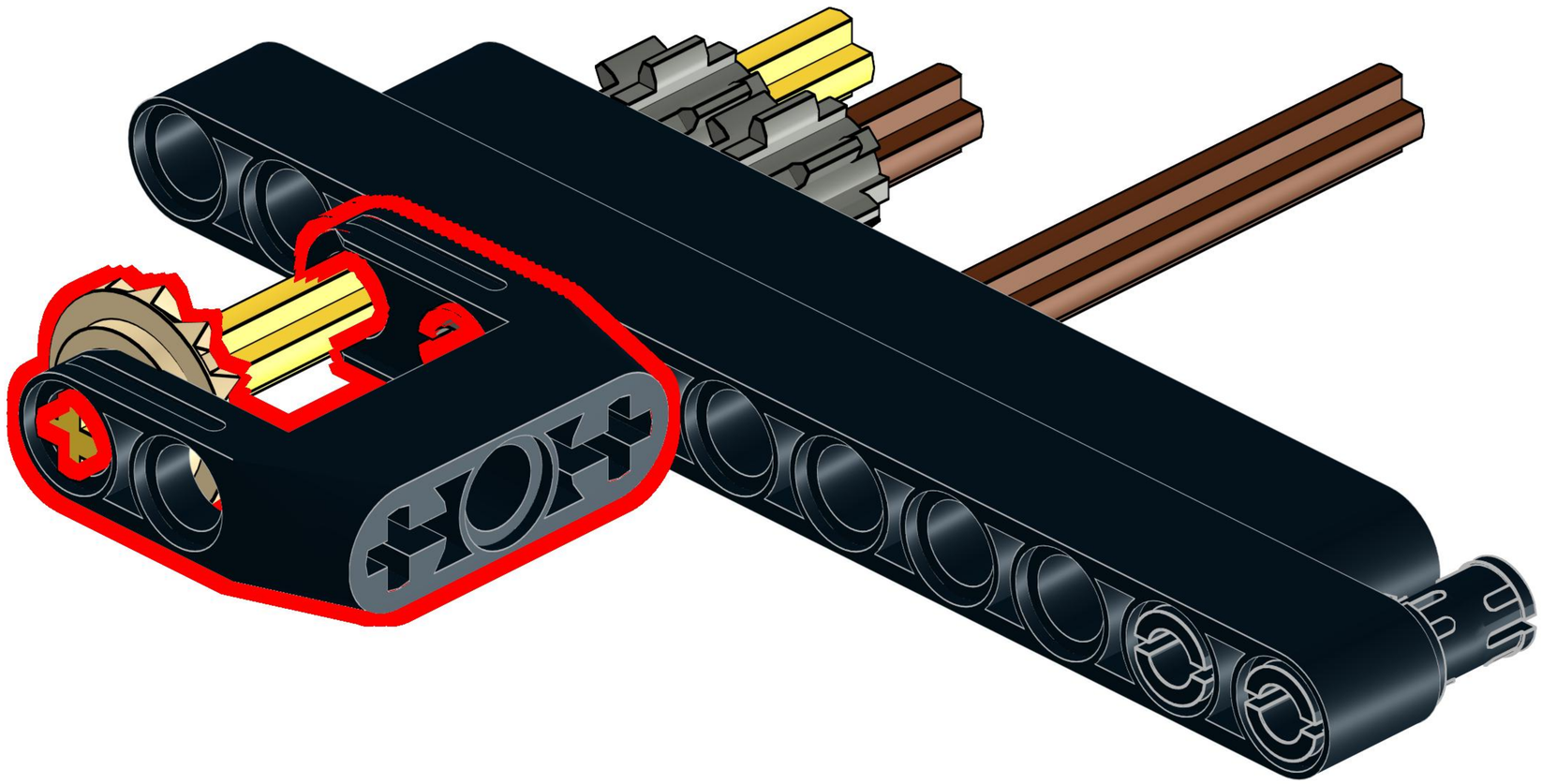

150

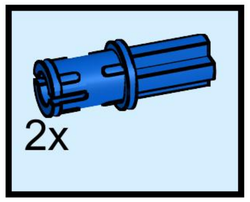

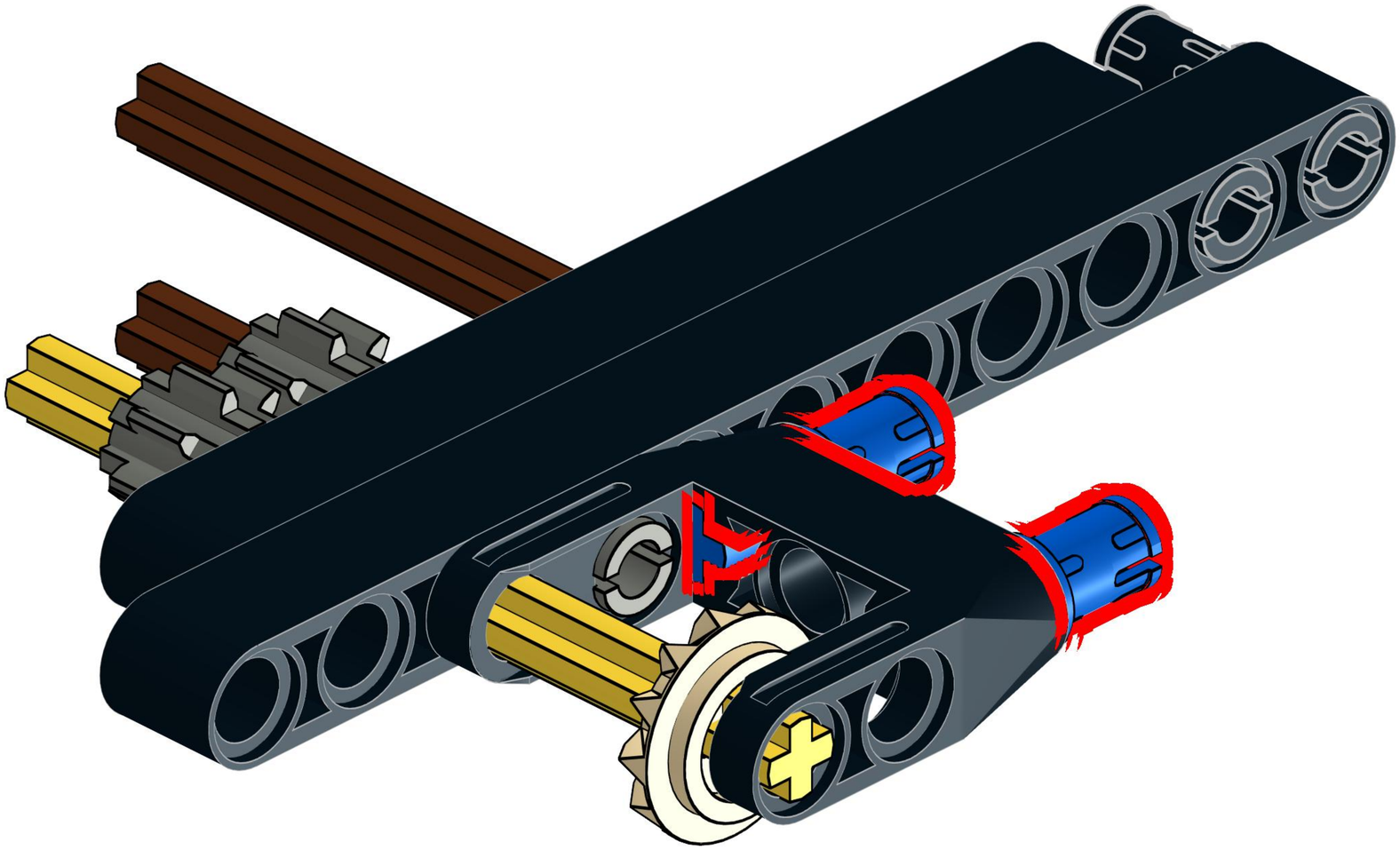

151

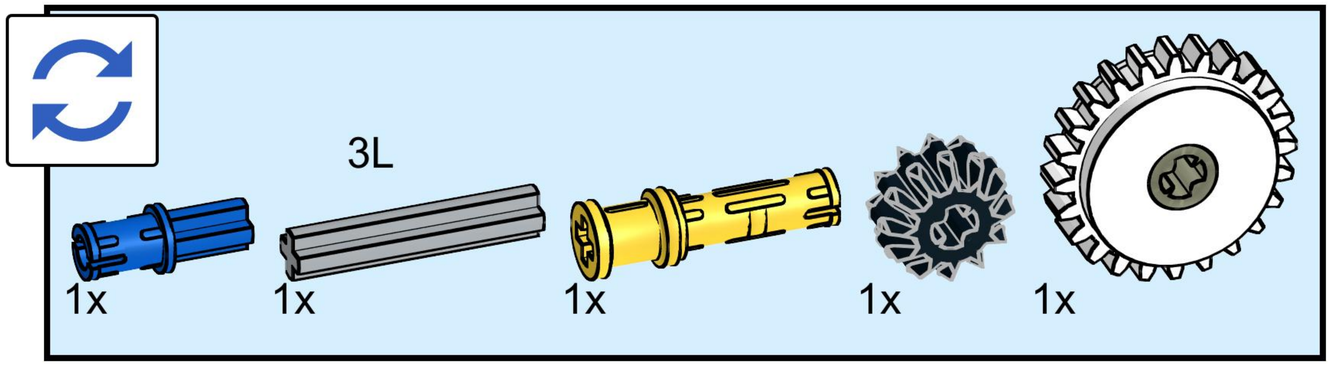

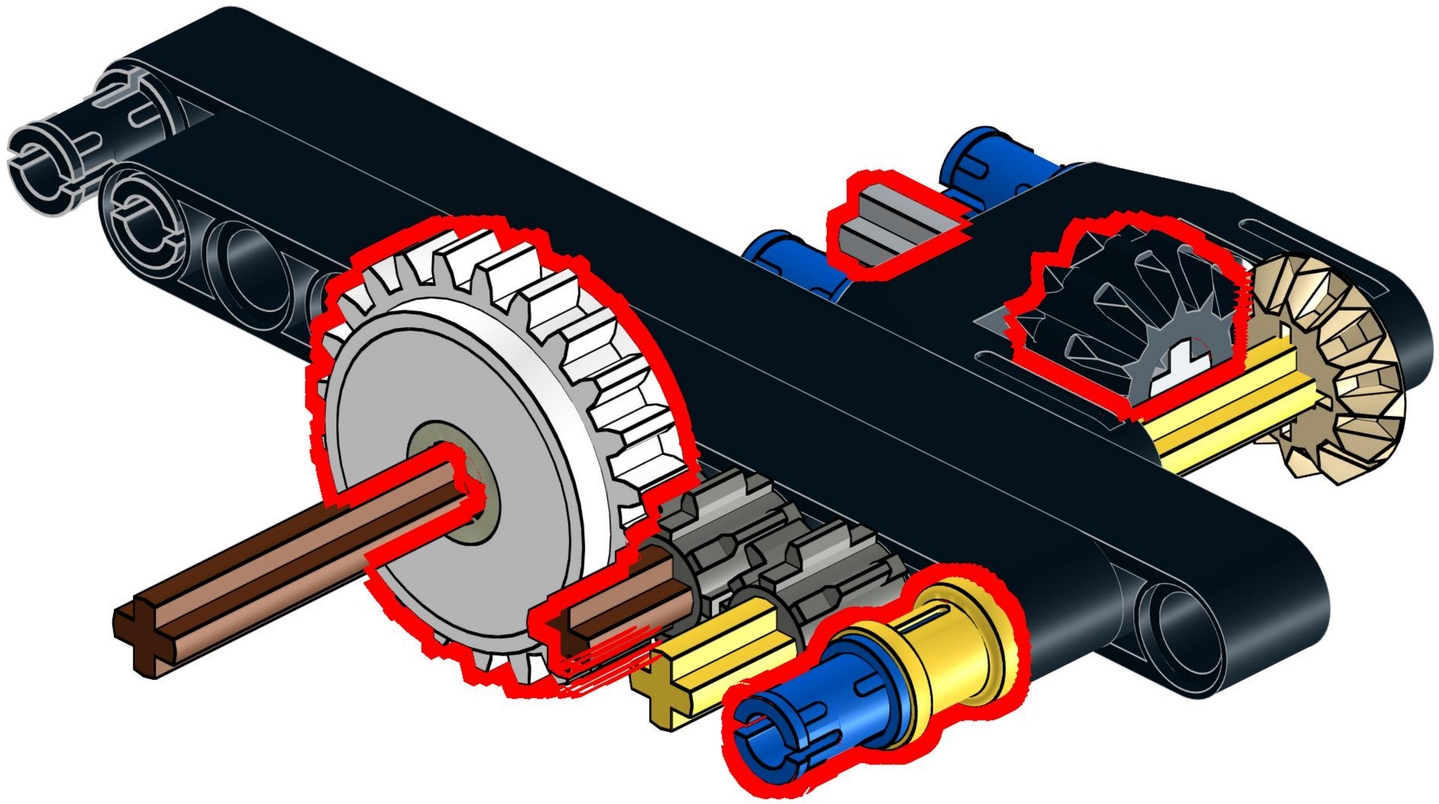

152

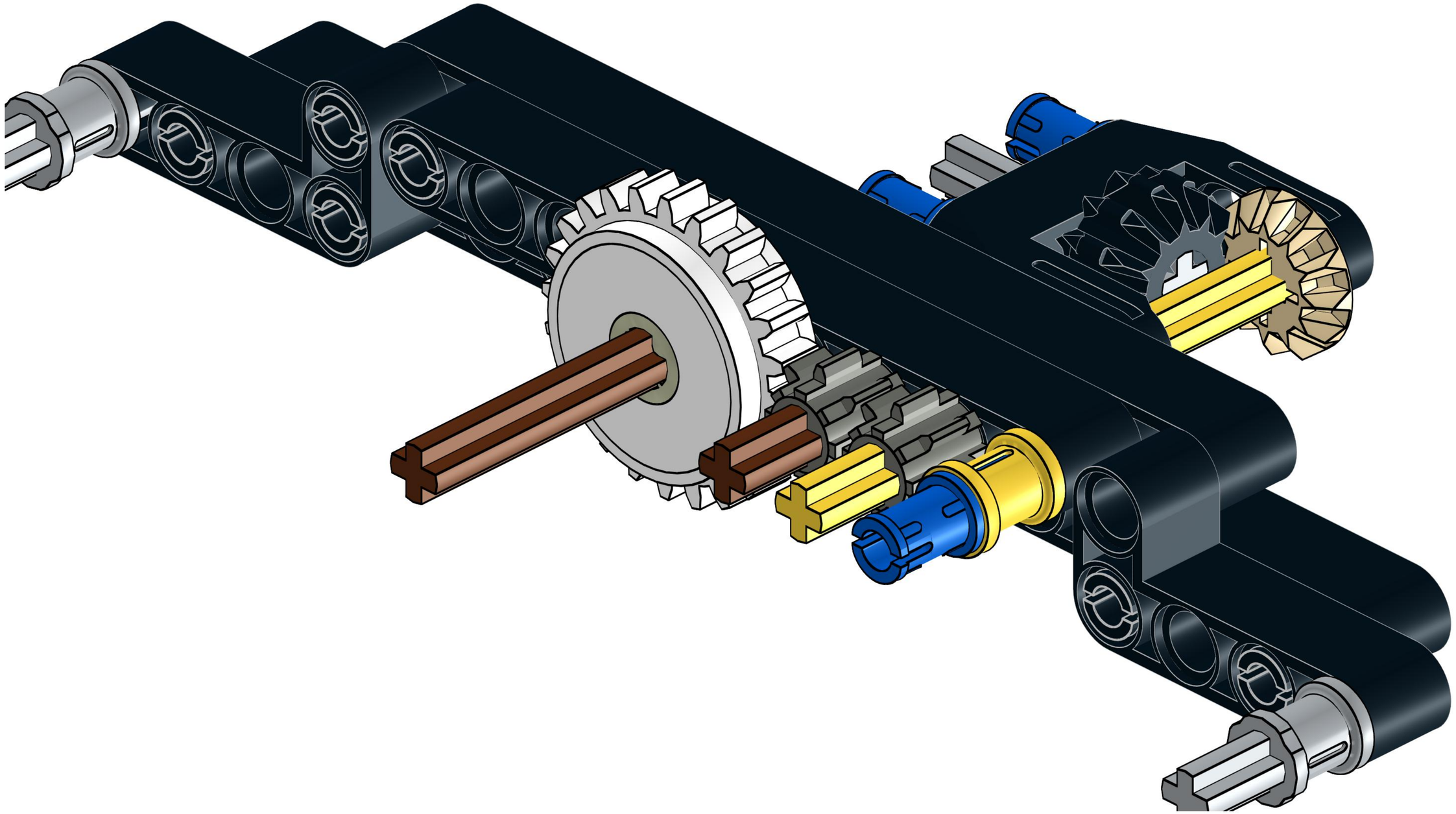

153

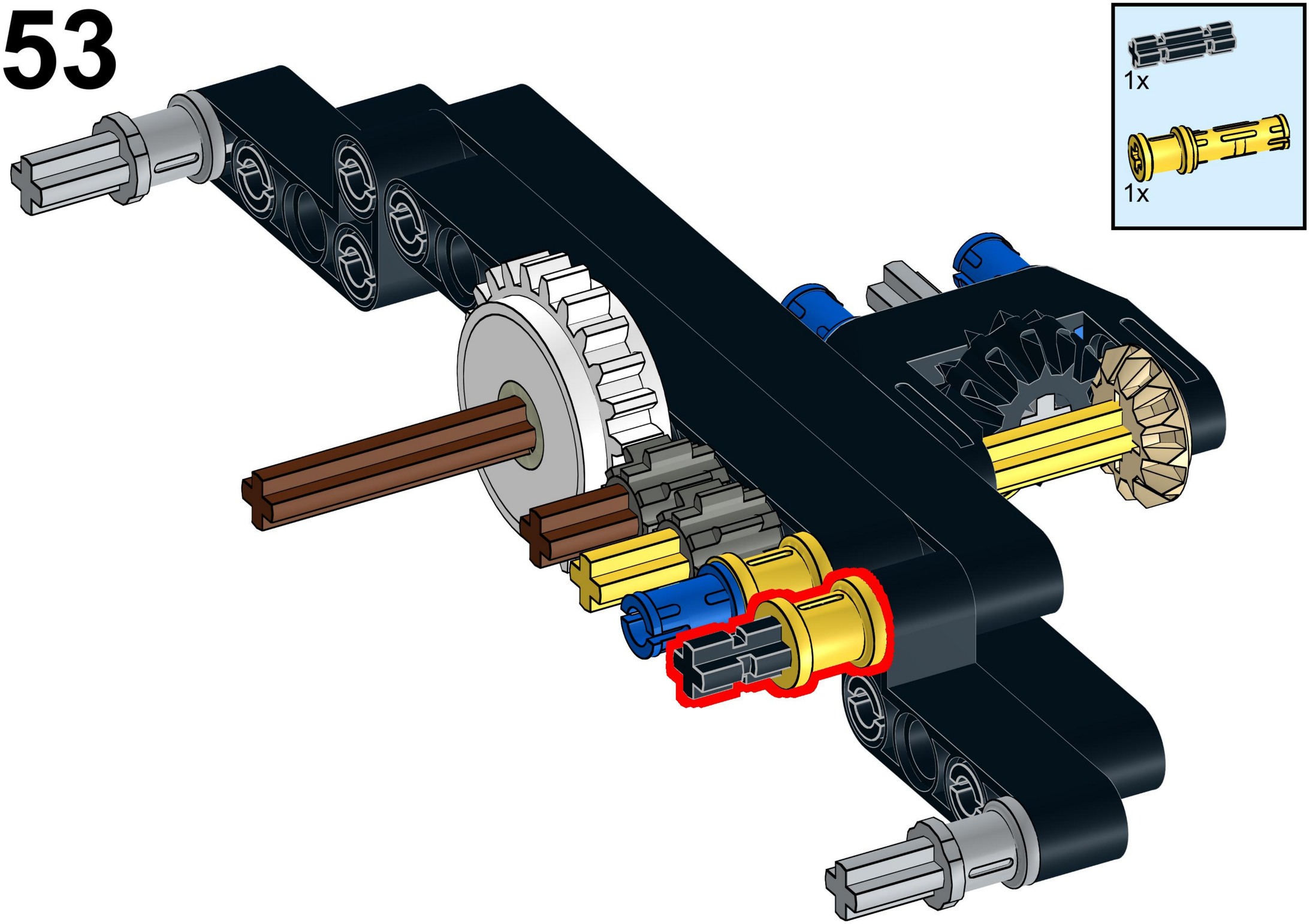

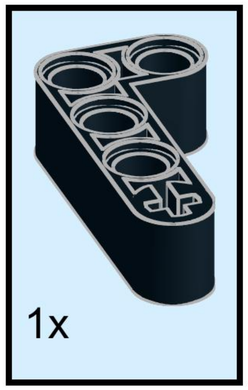
1x

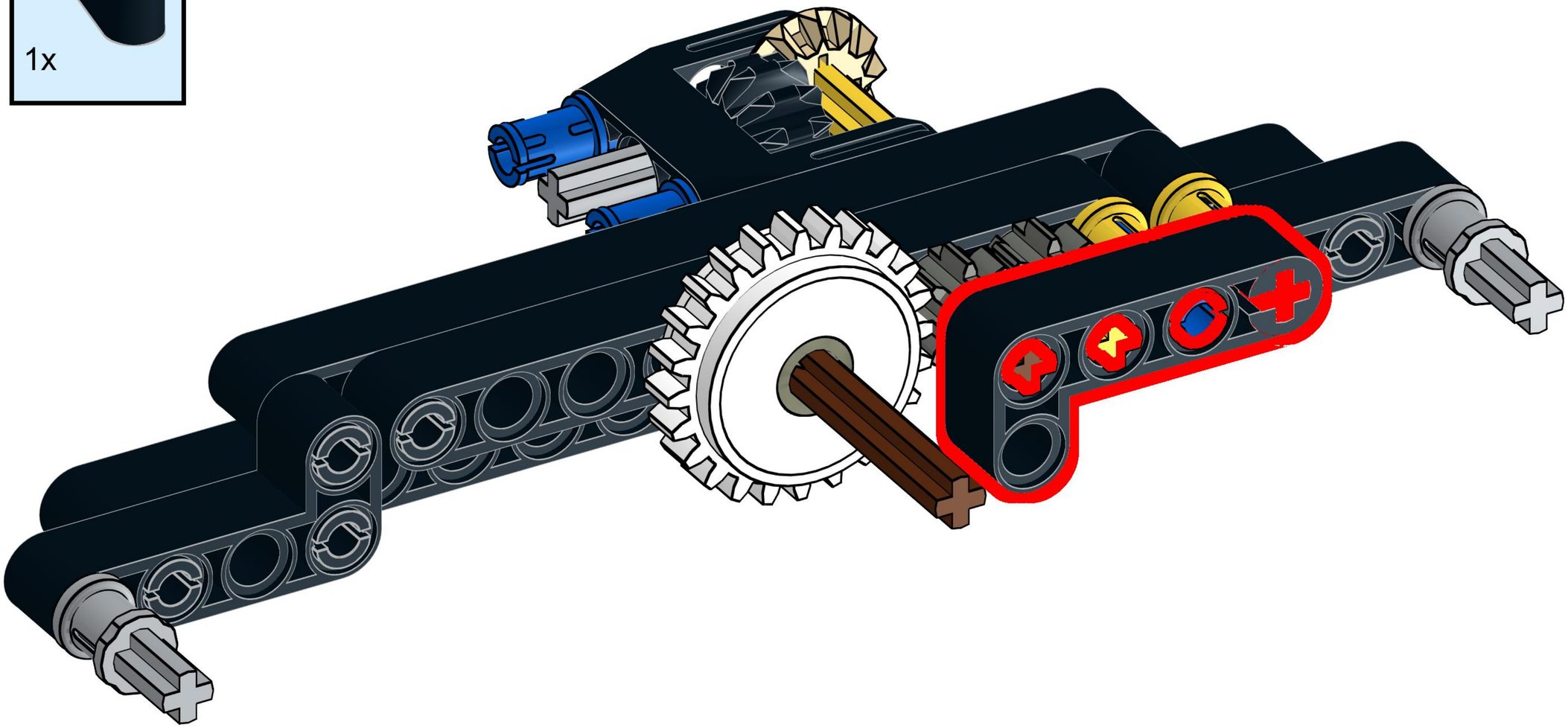

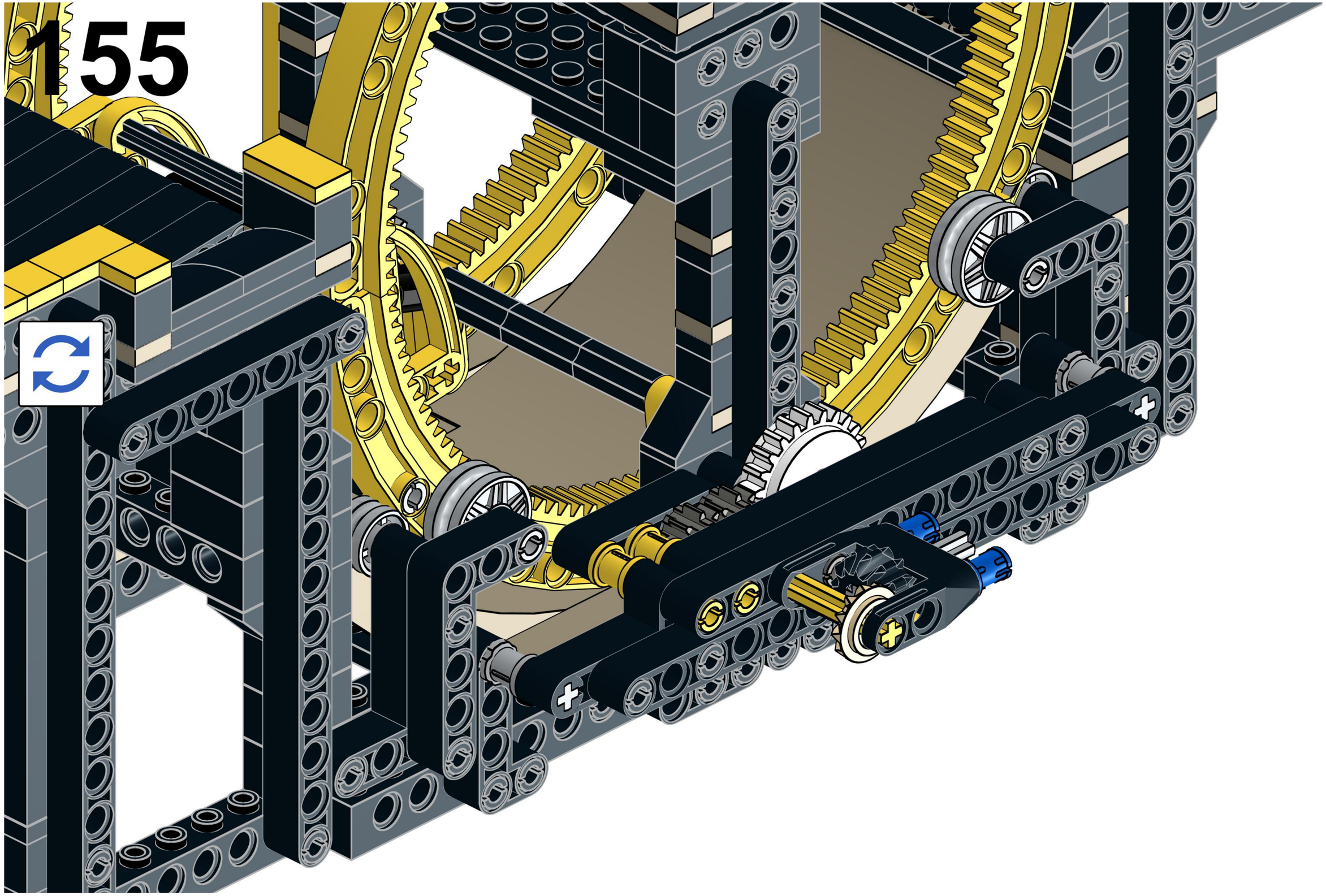
155

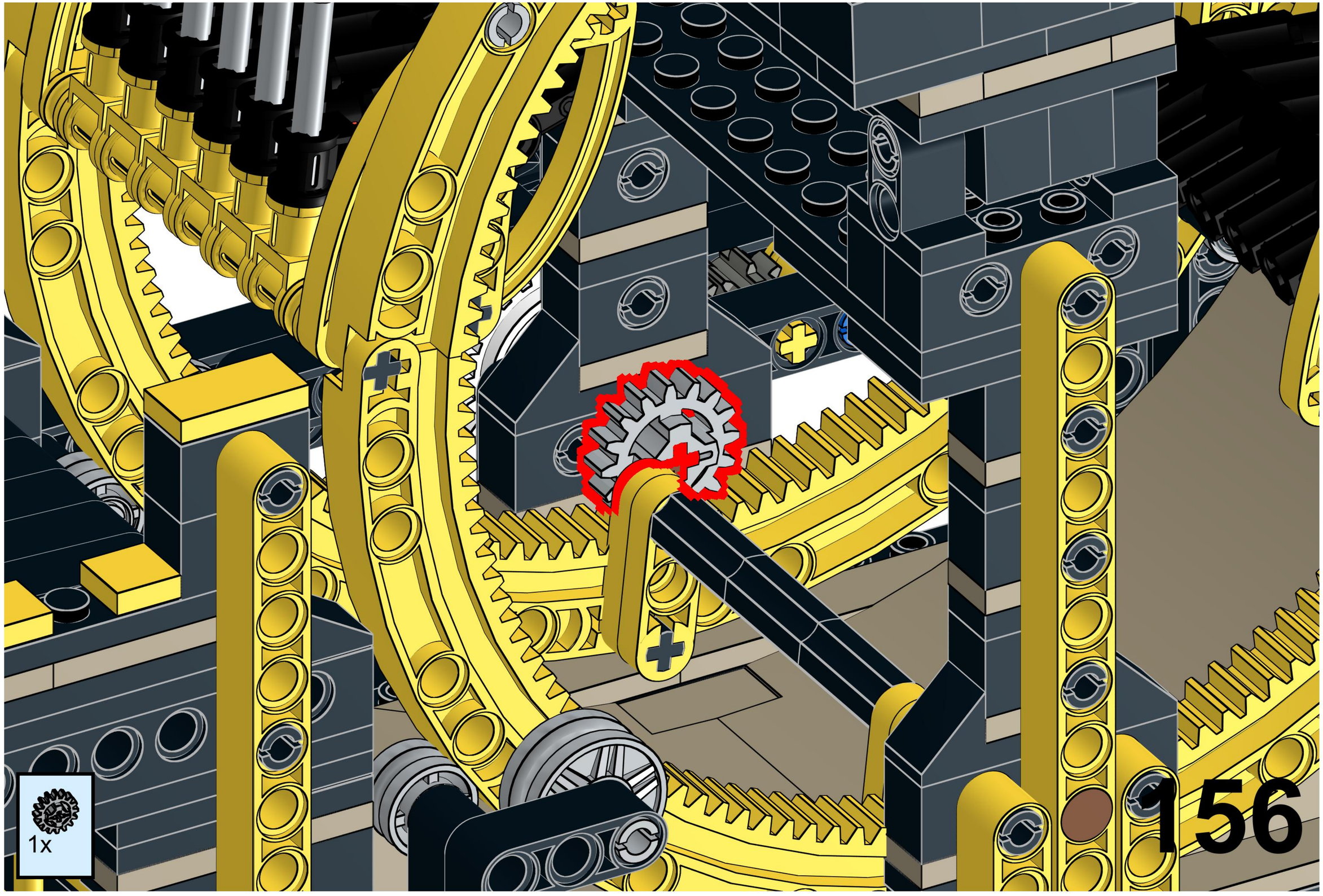
1x
156

157

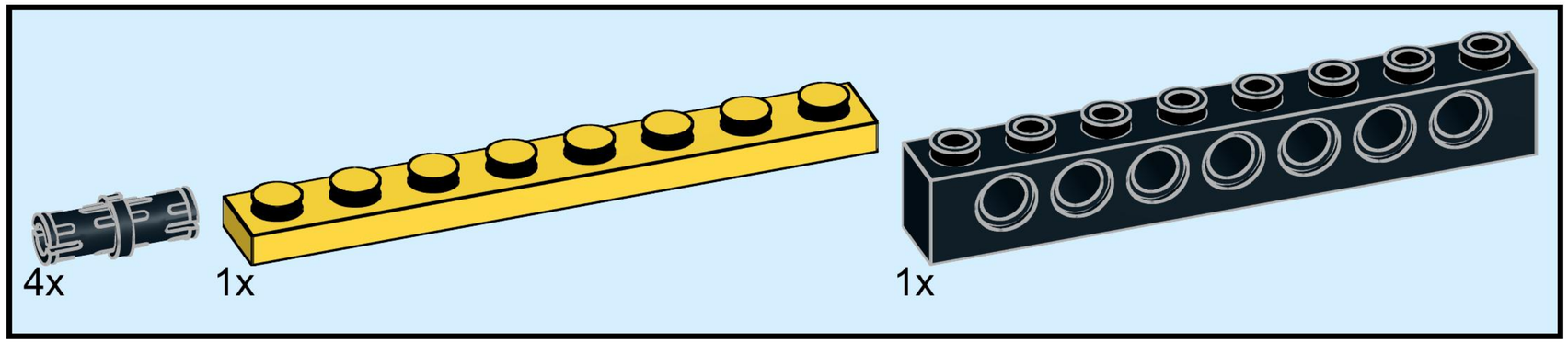

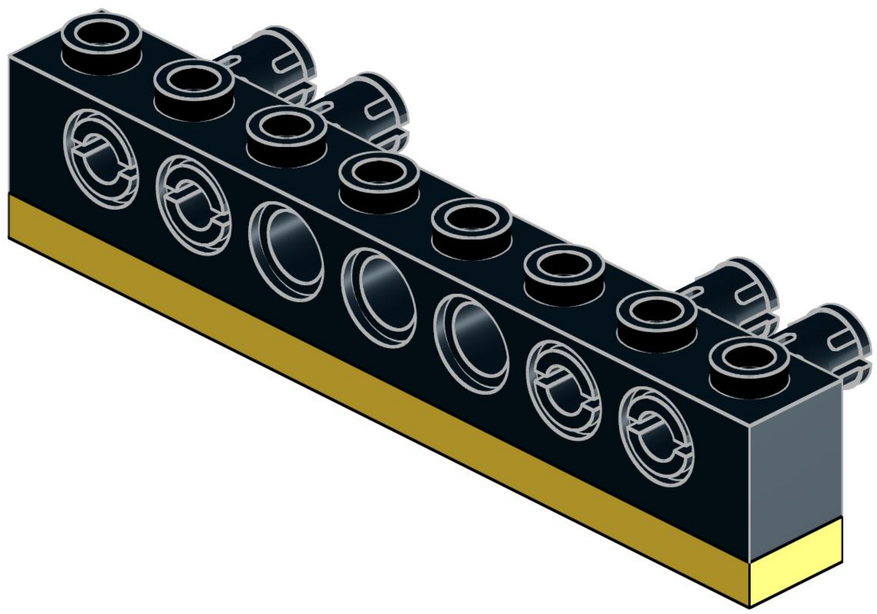

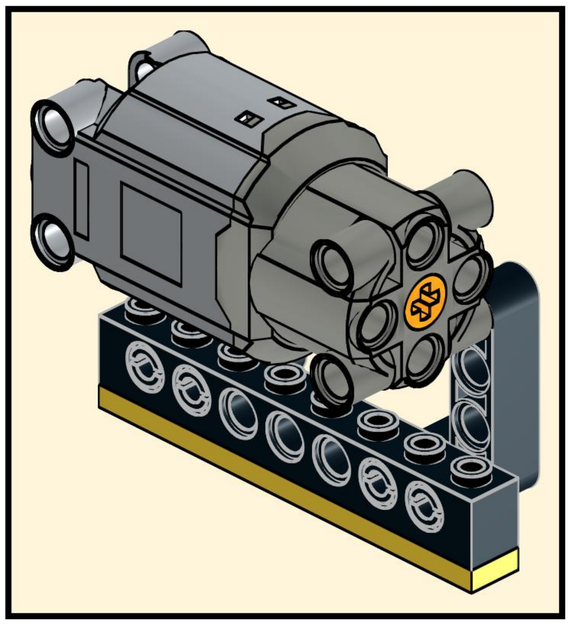

158

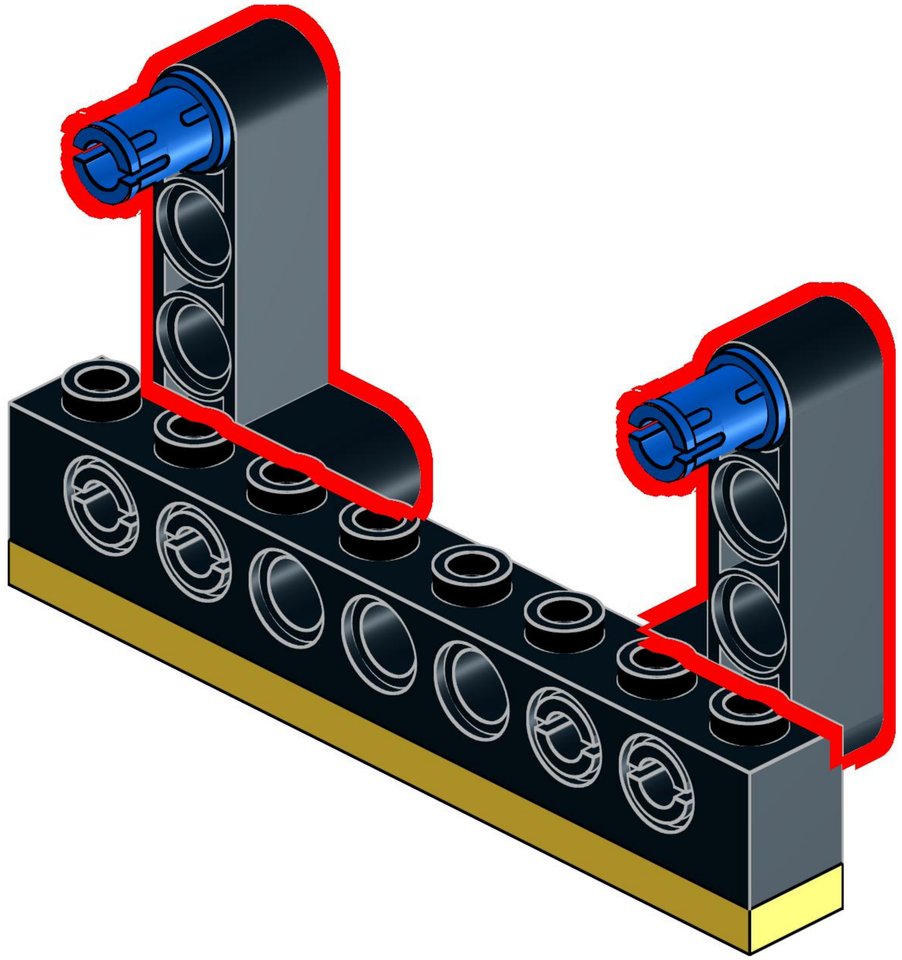

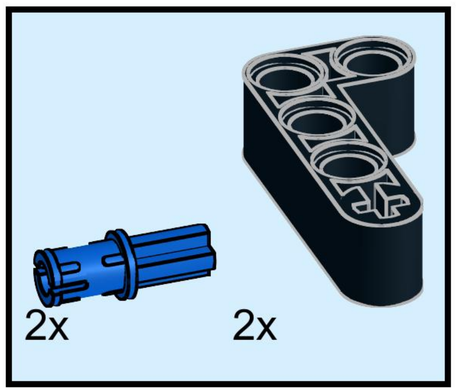

159

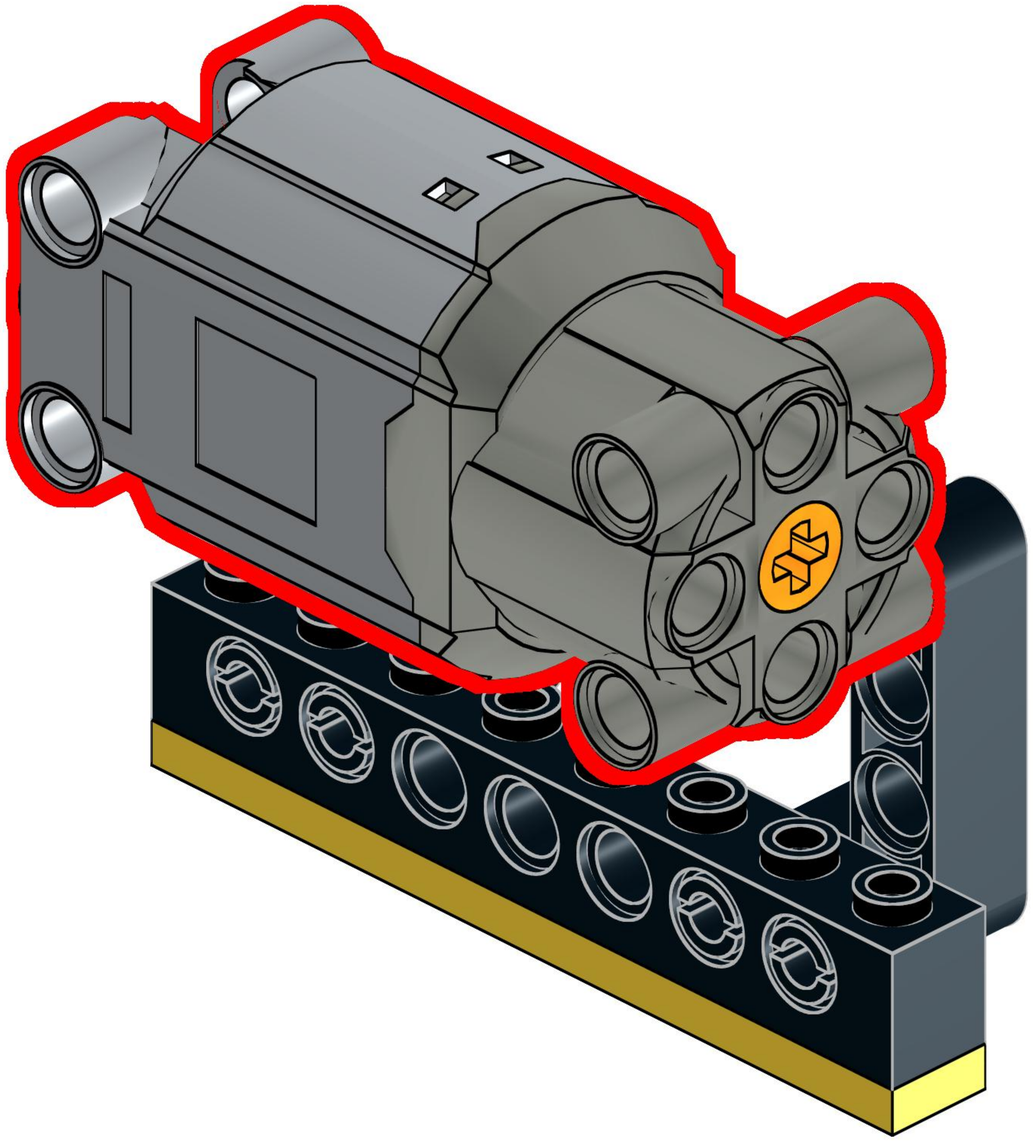

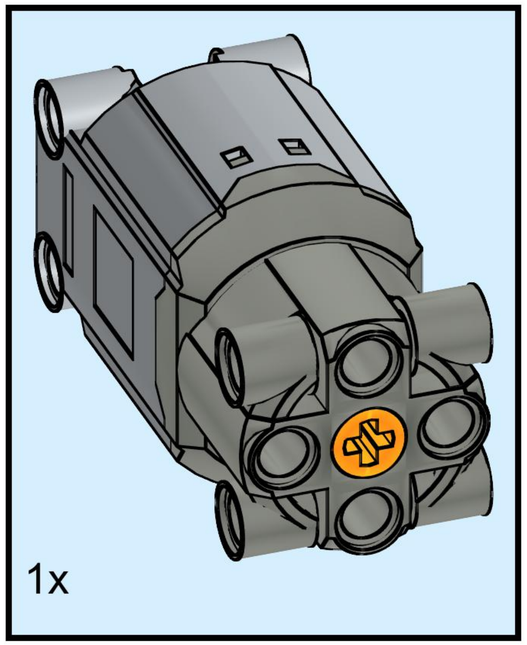

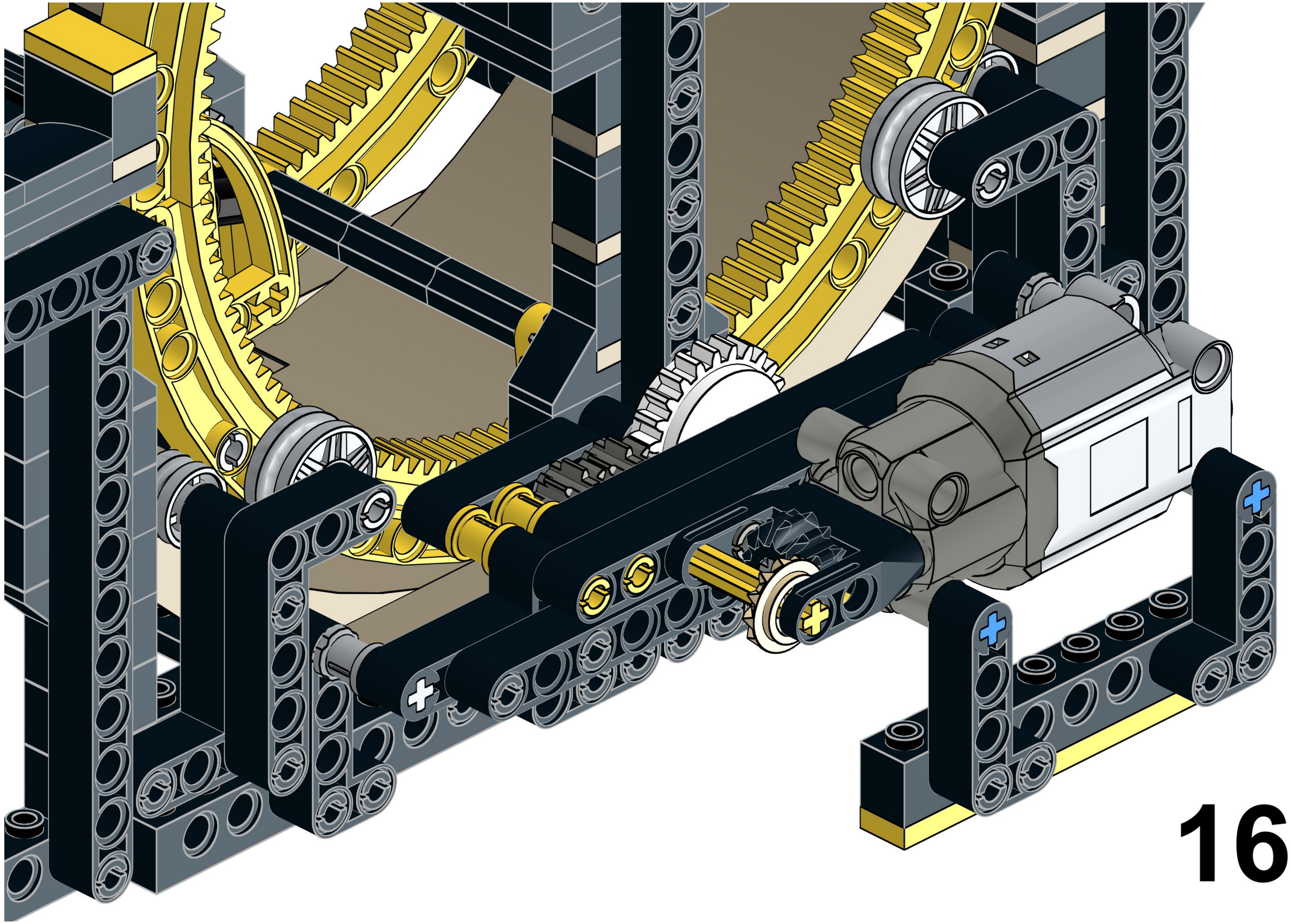

161

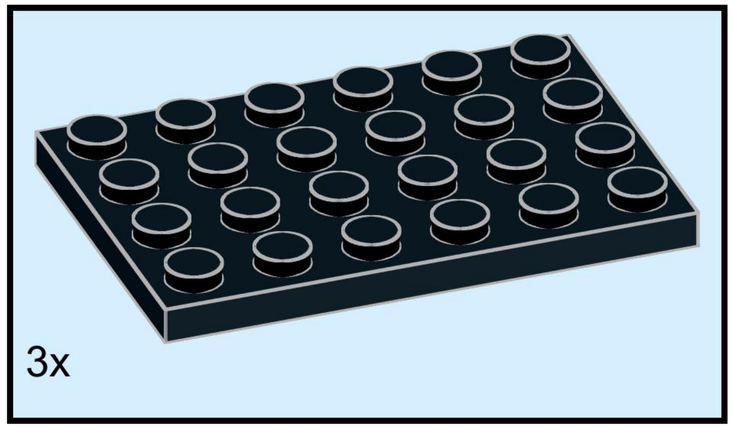

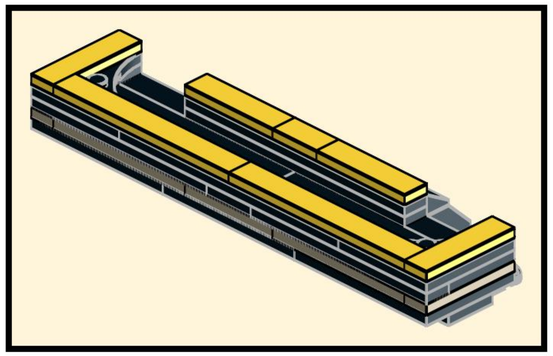

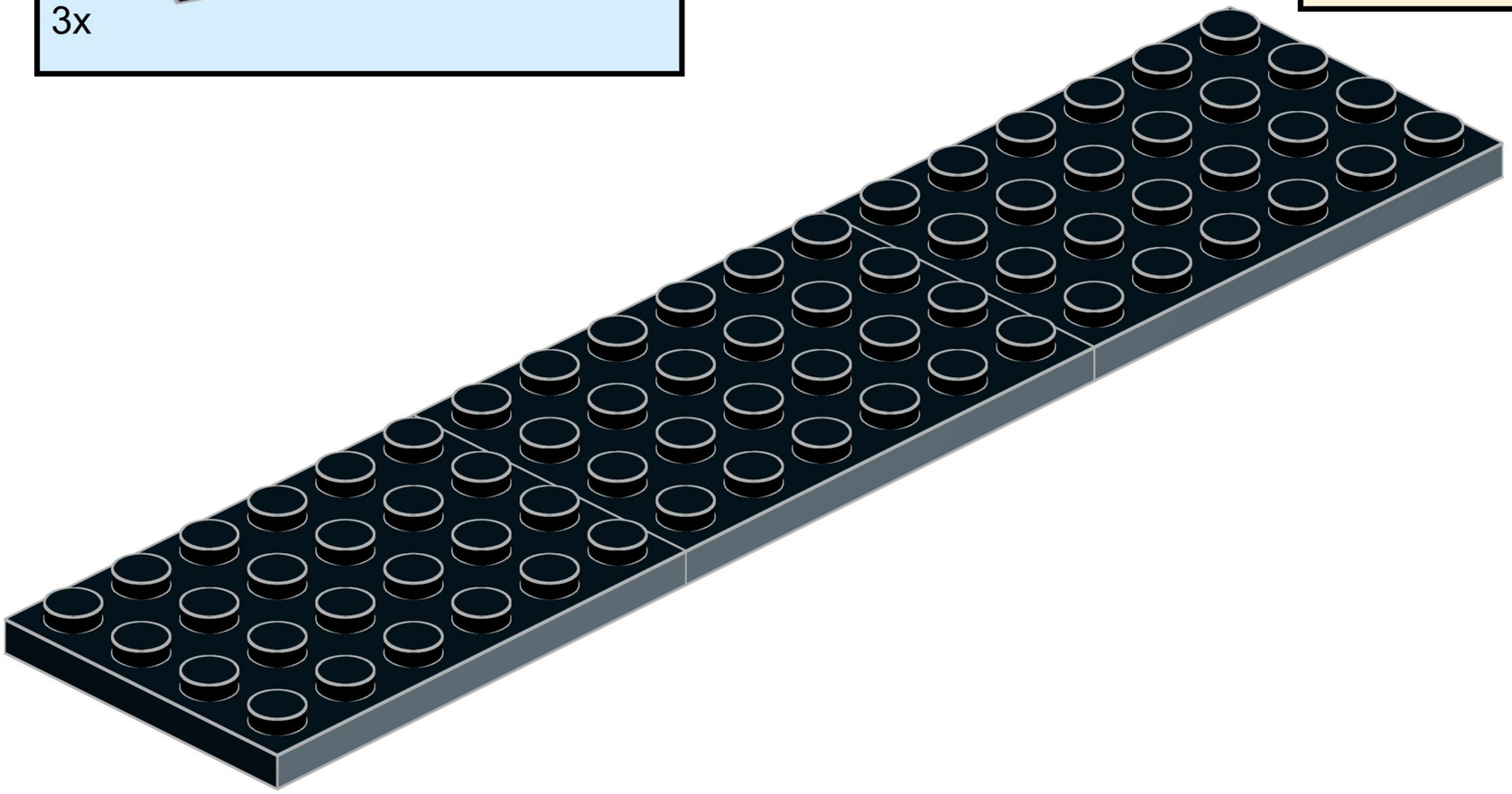

162

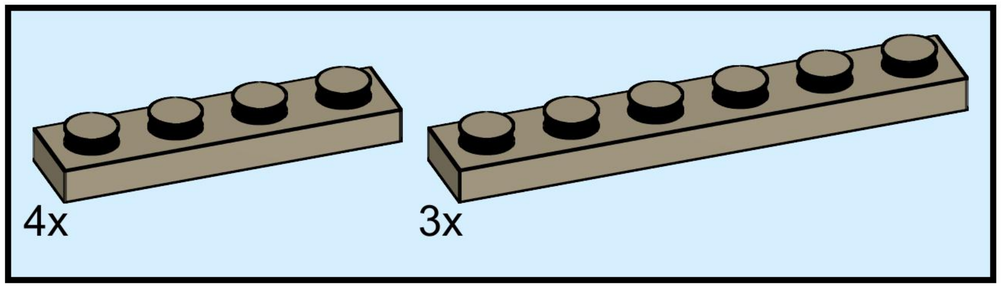

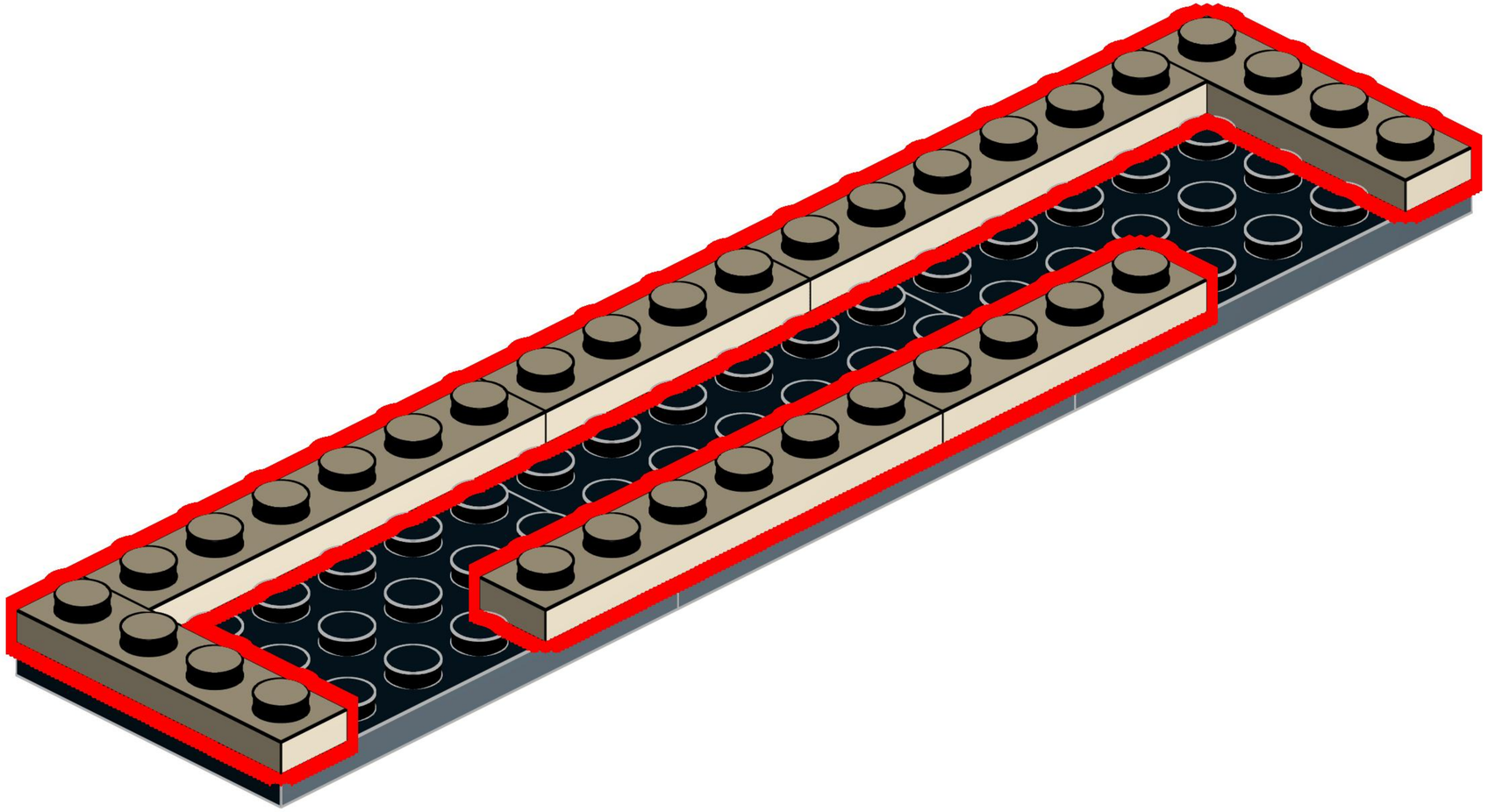

163

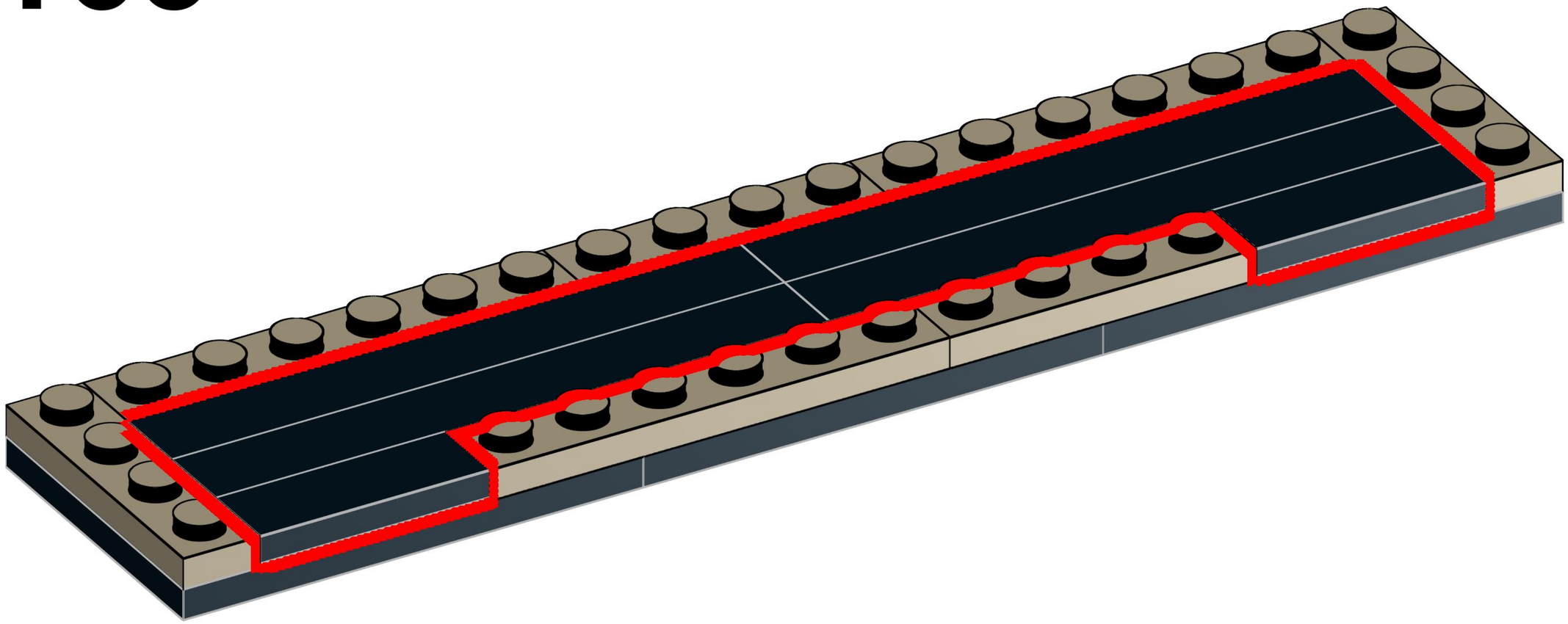

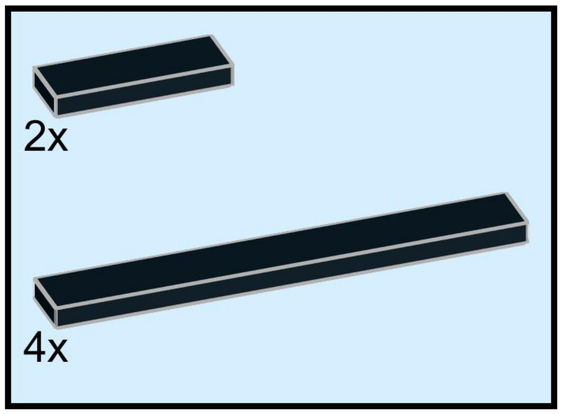

164

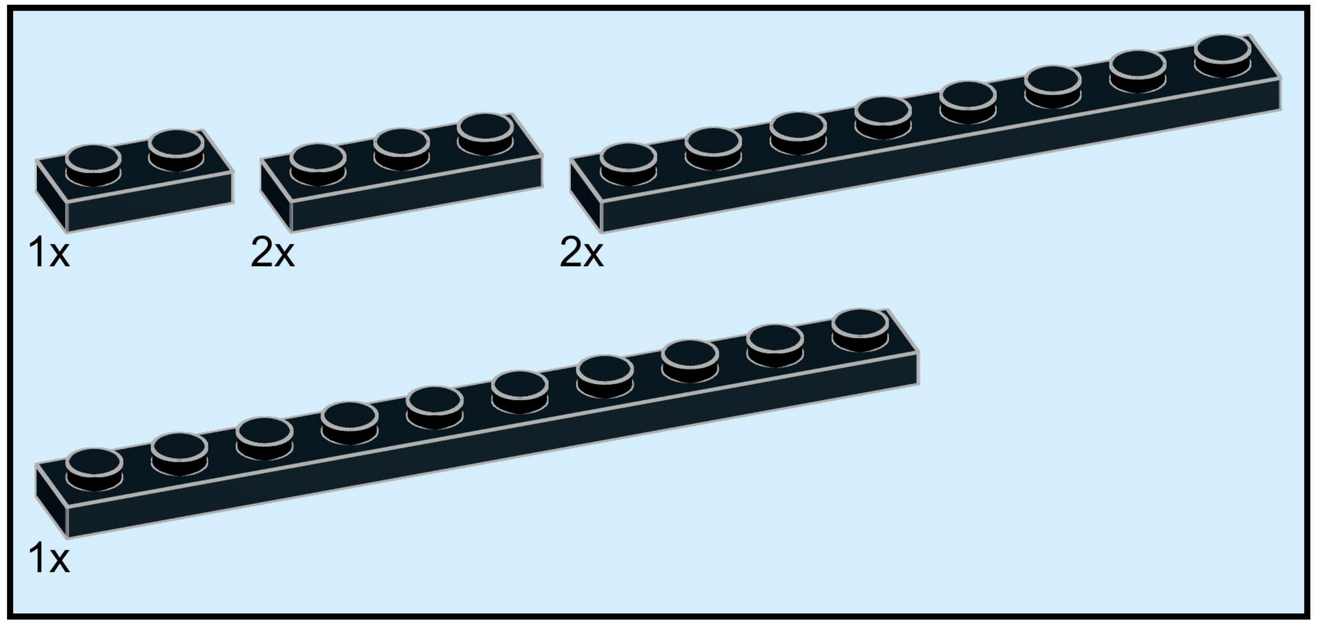

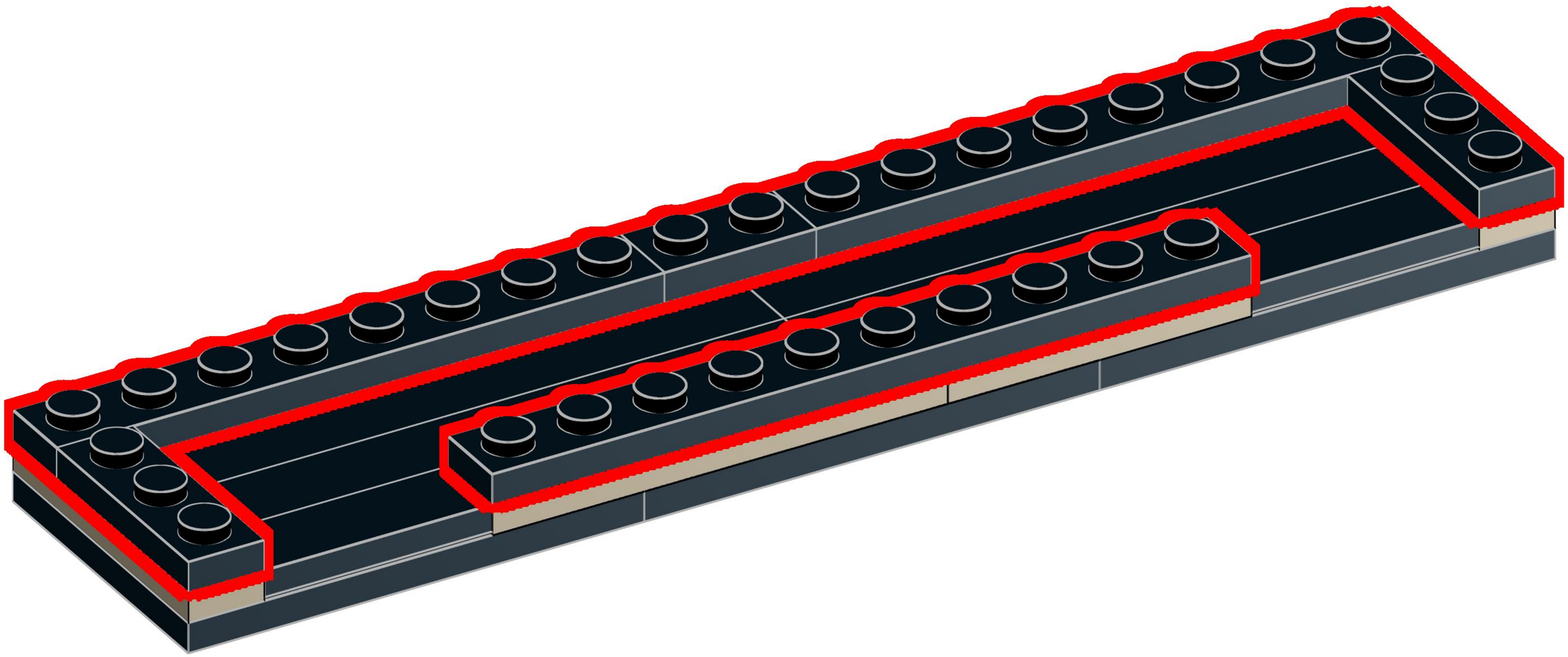

165

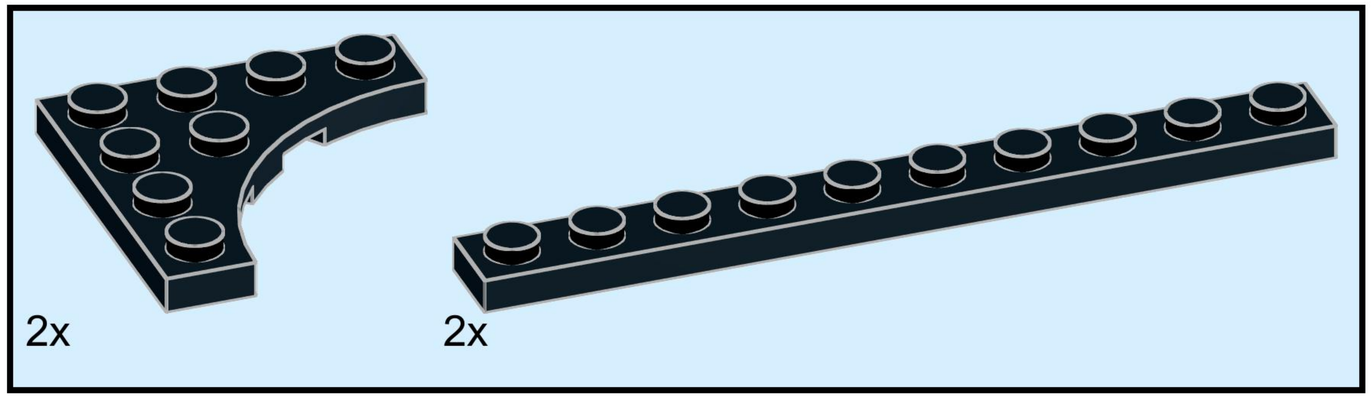

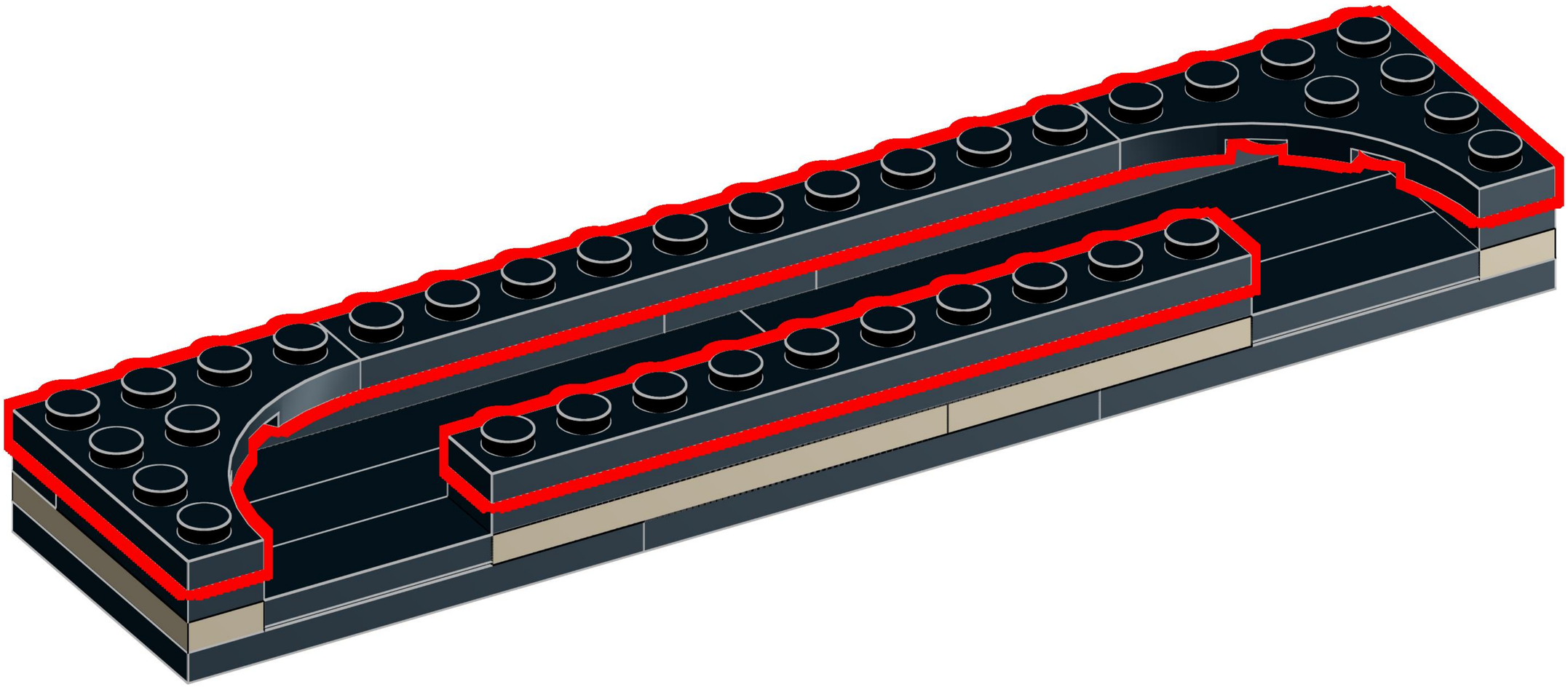

166

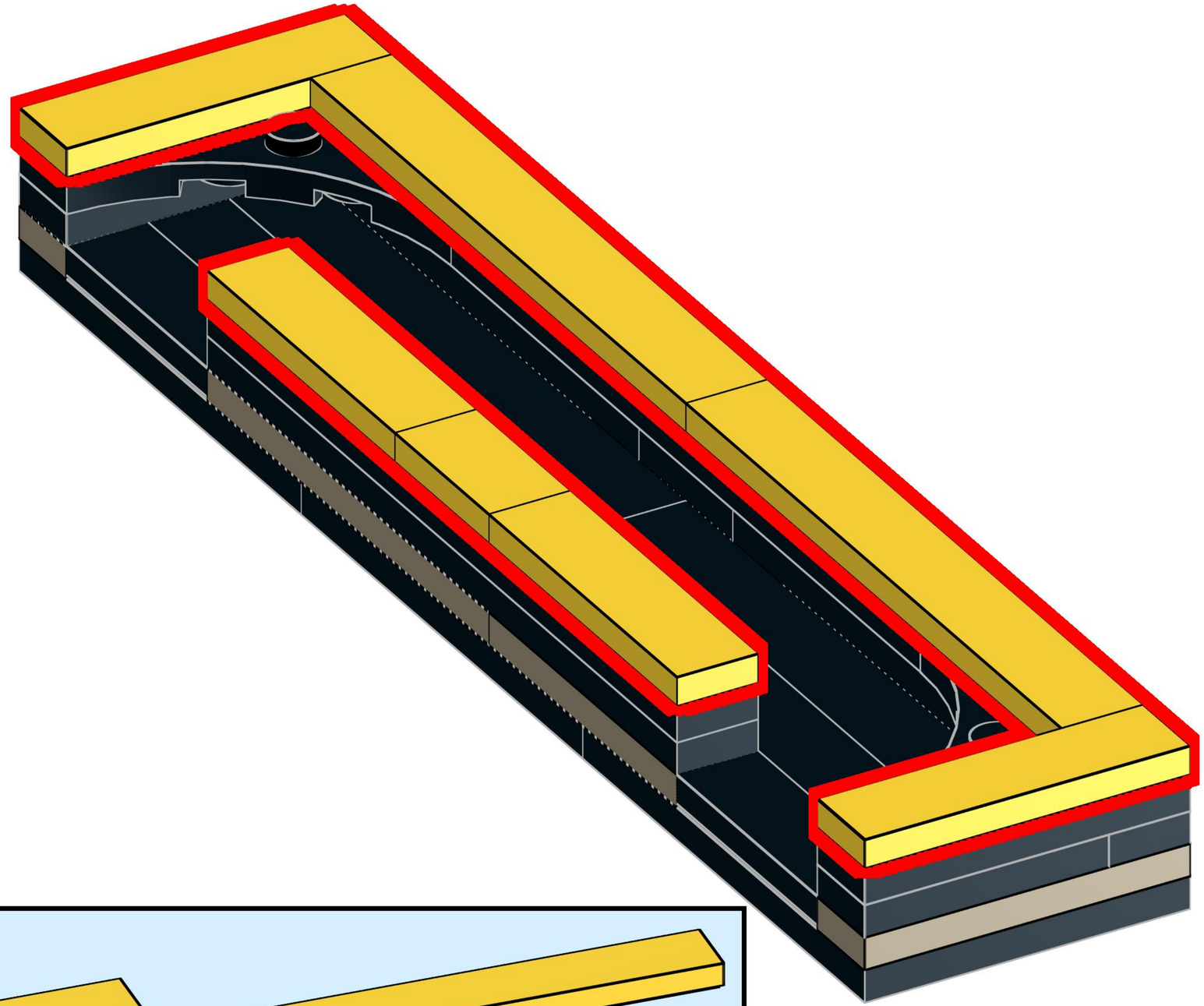

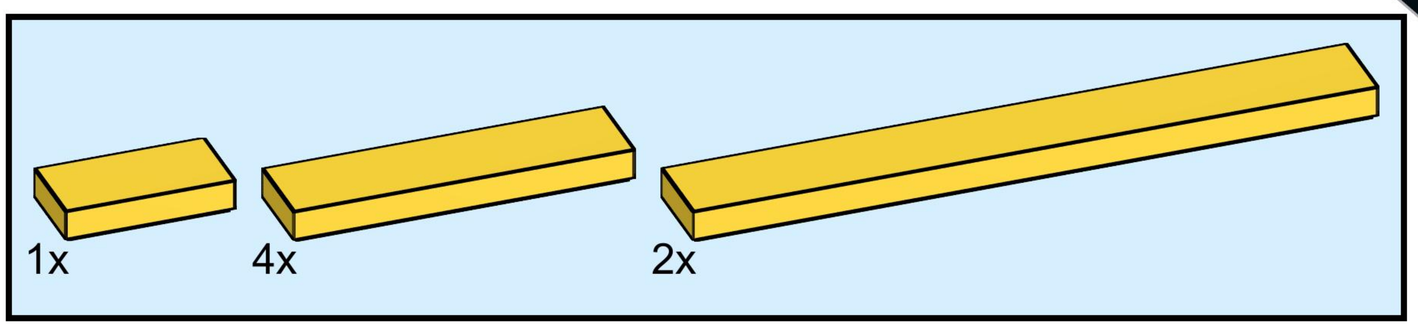

167

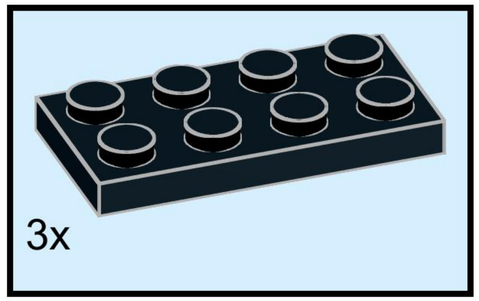

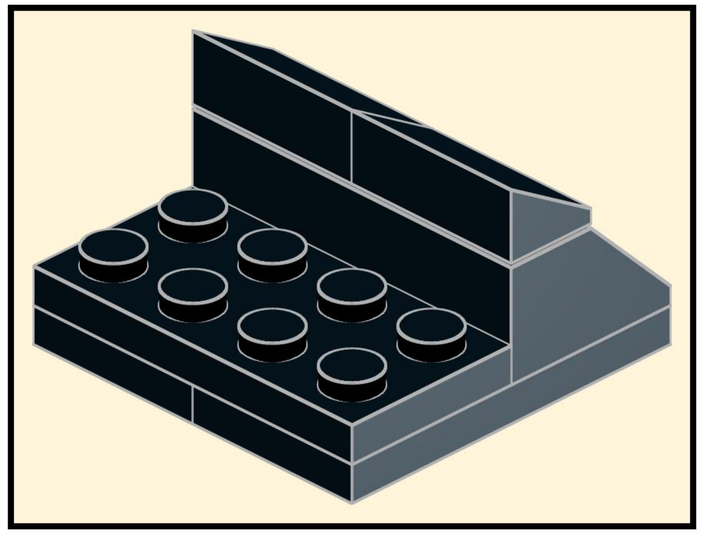

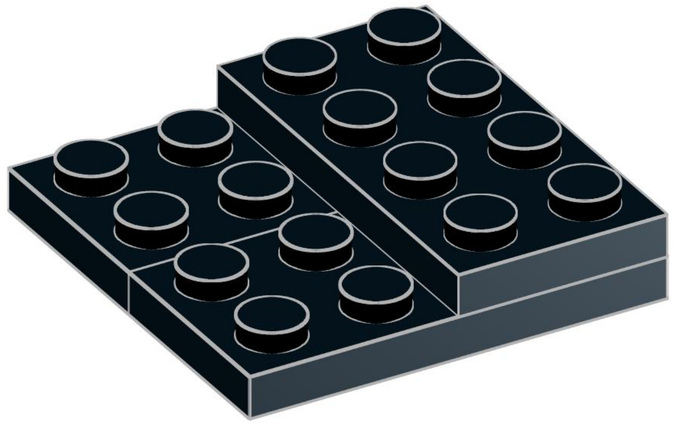

168

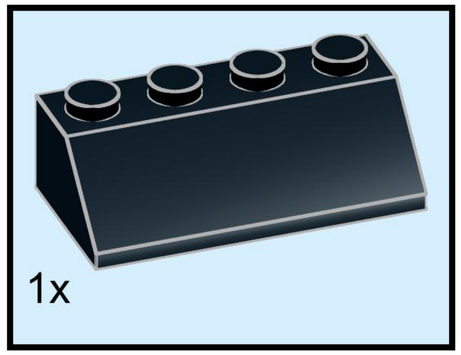

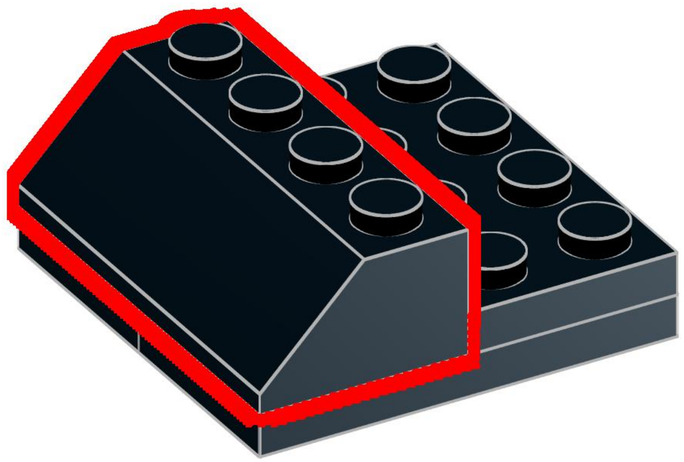

169

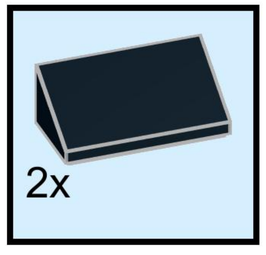

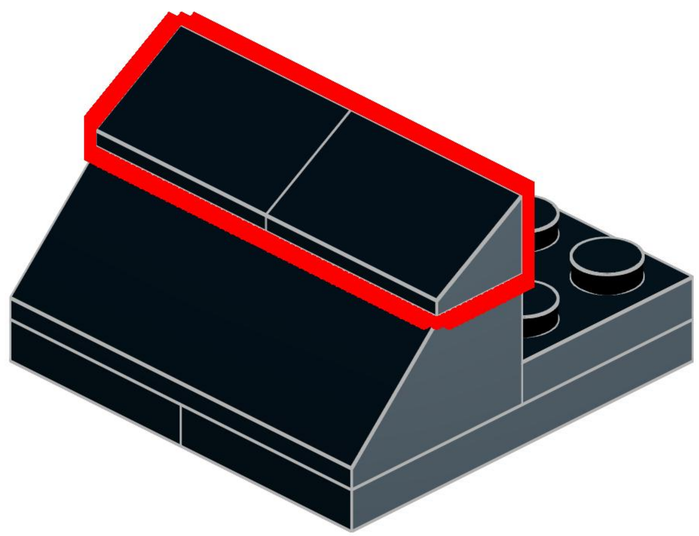

170

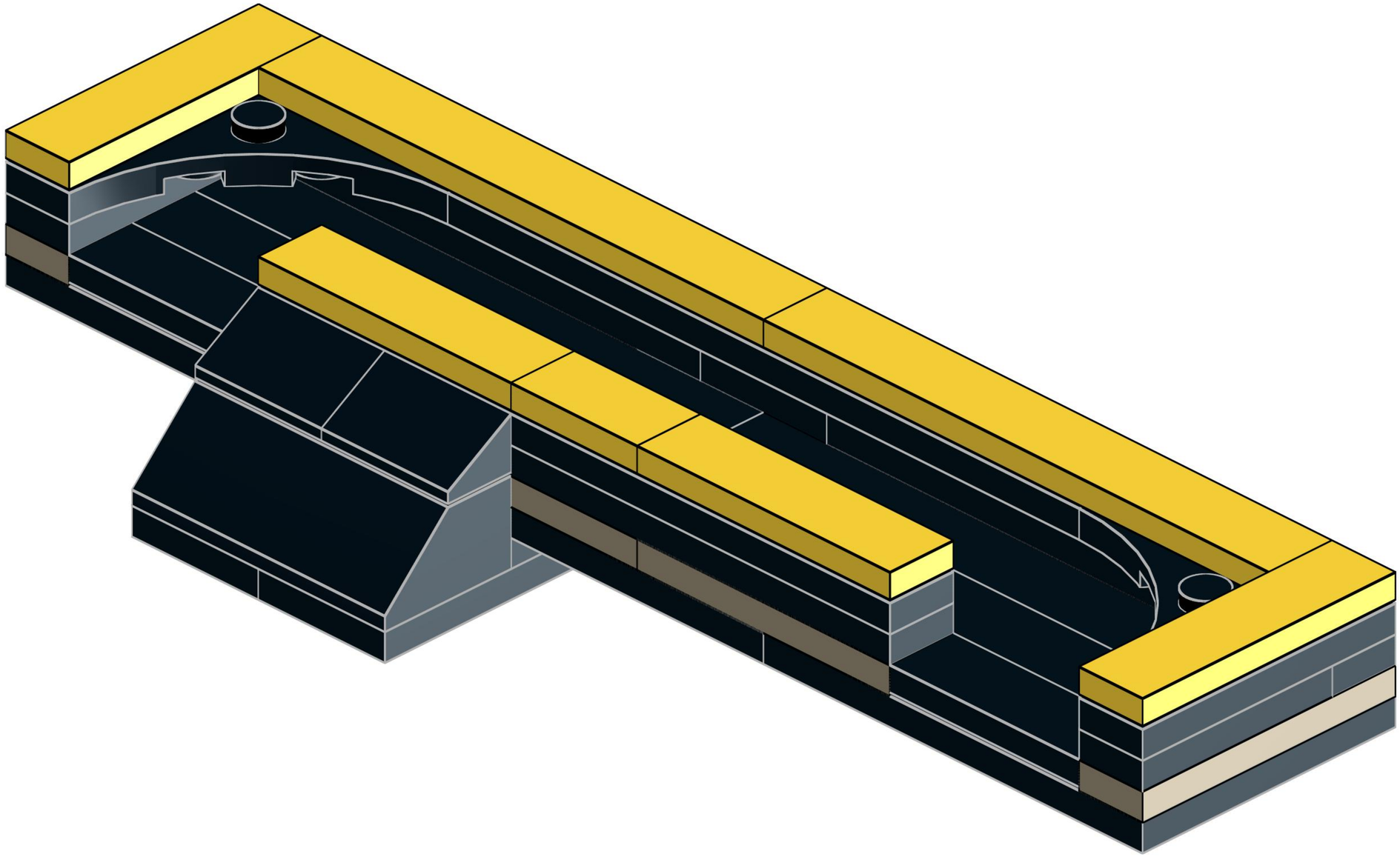

171

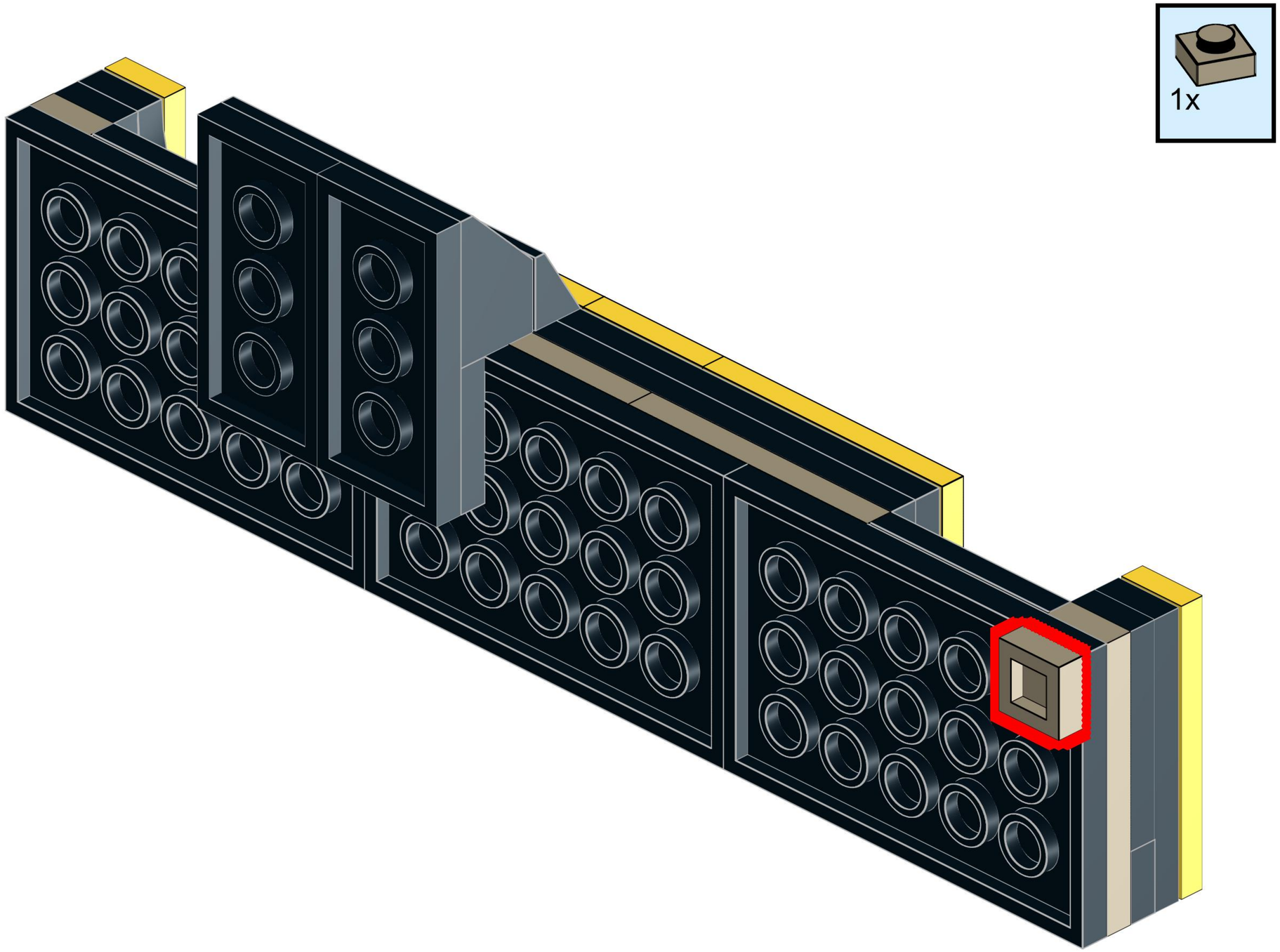

172

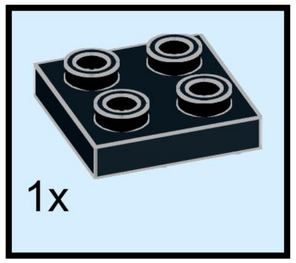

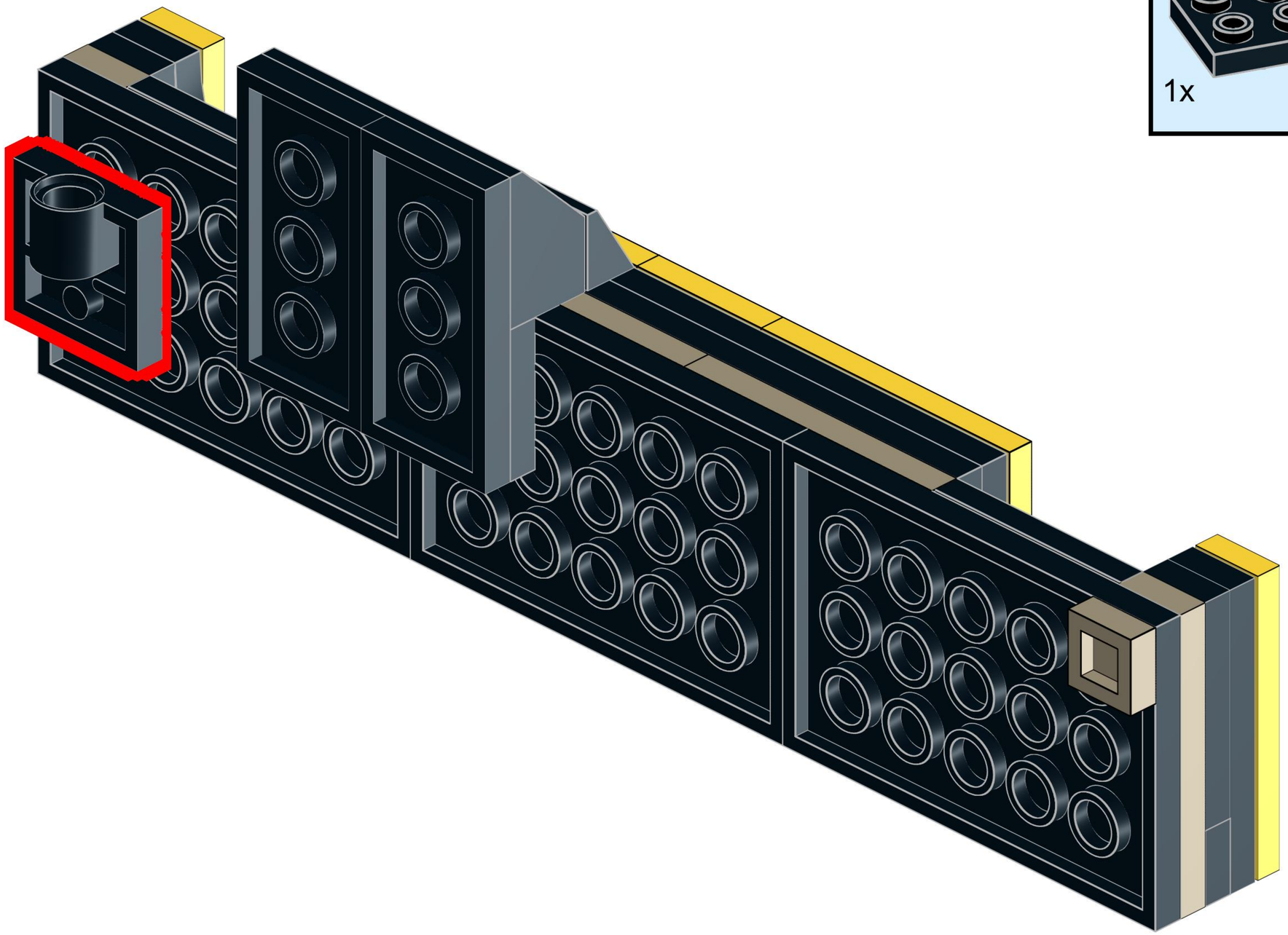

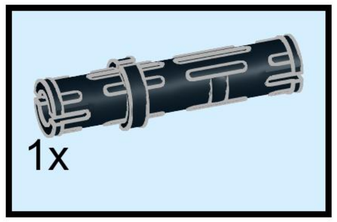

173

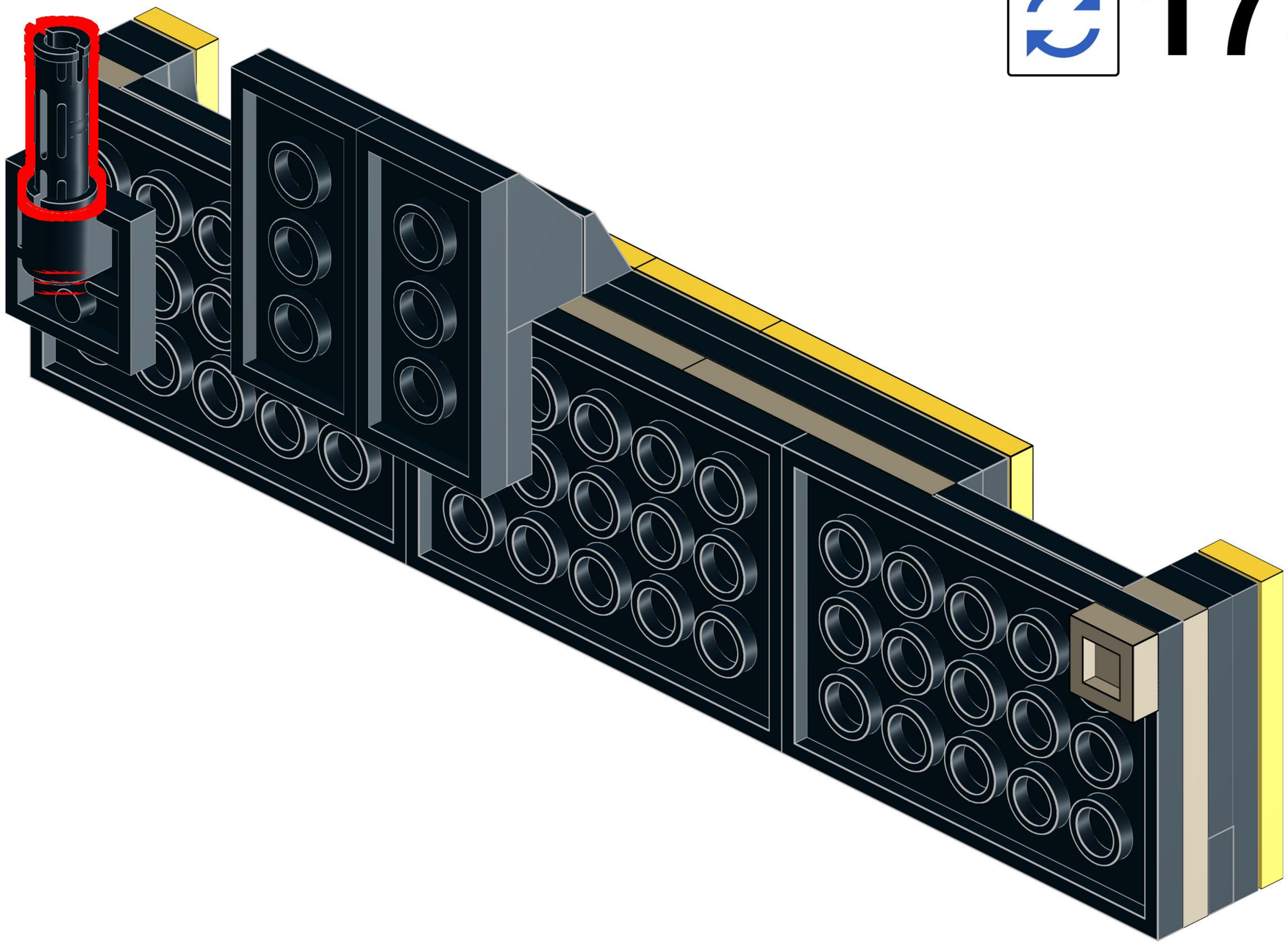

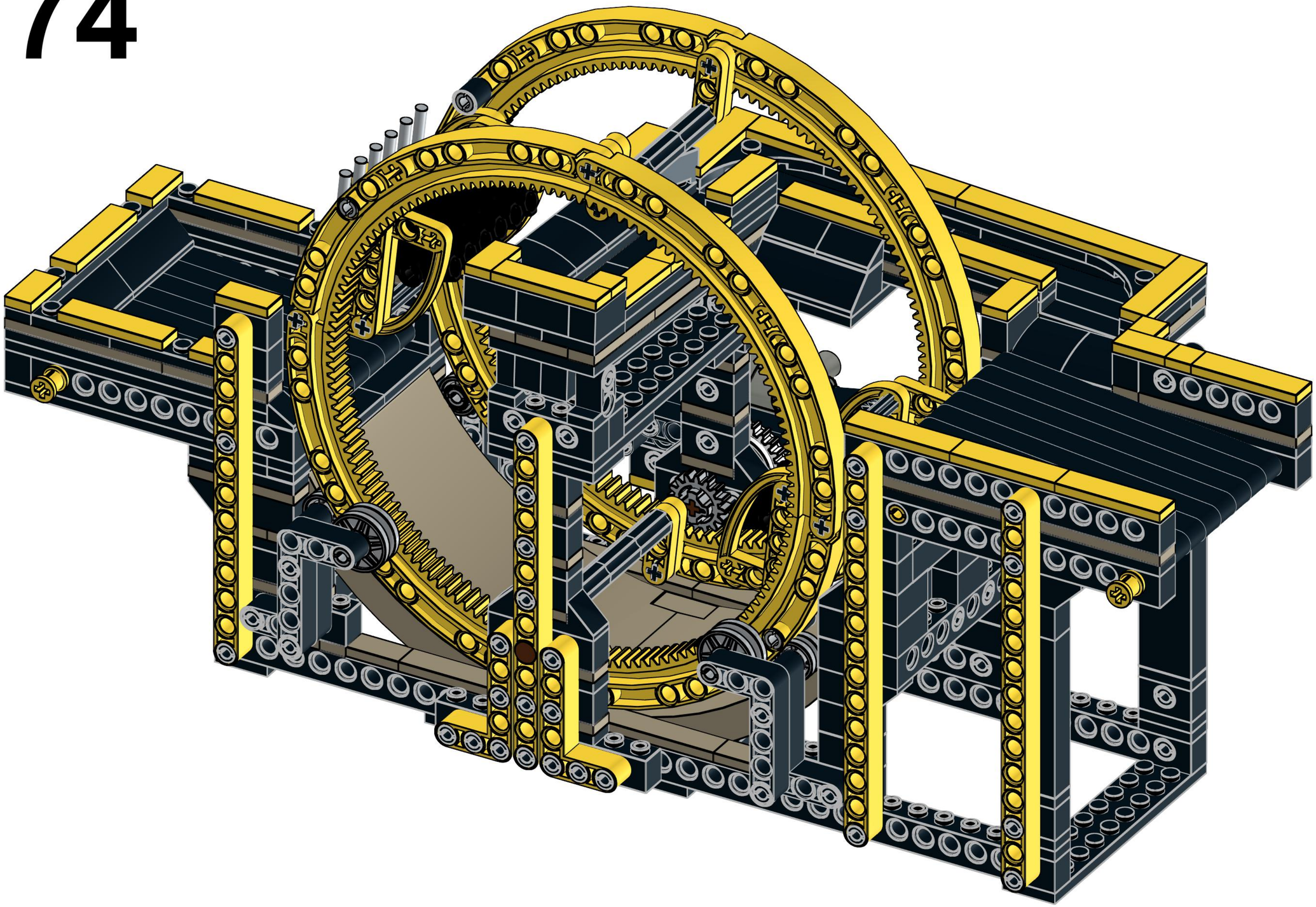

12x
32039, -1

4x
6558, -1

12x
32016, -1

3x
3024, 11

2x
54200, 11

5x
18654, 11

8x
3005, 11

13x
32062, 11

70x
2780, 11

1x
3069b, 11

13x
3023, 11

2x
85984, 11

6x
6538c, 11

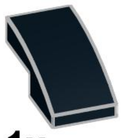
1x
11477, 11

4x
92946, 11

24x
3004, 11

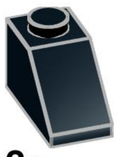
2x
3040, 11

1x
32270, 11

6x
3665, 11

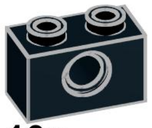
10x
3700, 11

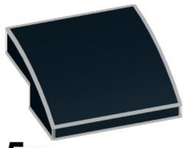
5x
15068, 11

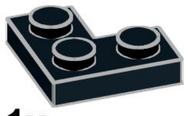
1x
2420, 11

2x
32530, 11

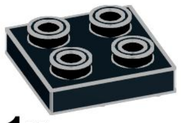
1x
2444, 11

2x
63864, 11

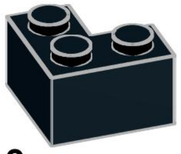
3x
2357, 11

2x
32054, 11

11x
3623, 11

37x
6558, 11

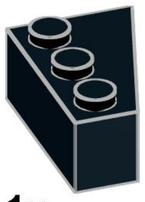
1x
6565, 11

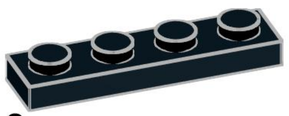
8x
3710, 11

3x
2431, 11

1x
87408, 11

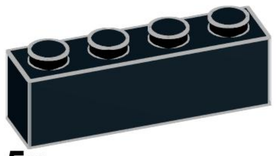
5x
3010, 11

14x
3701, 11

7x
32140, 11

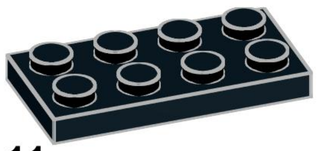
11x
3020, 11

7x
3037, 11

2x
35044, 11

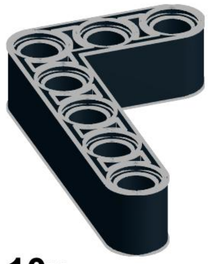
10x
32526, 11

3x
6636, 11

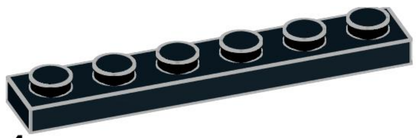
4x
3666, 11

2x
3894, 11

1x
3795, 11

2x
2454, 11

1x
32524, 11

3x
3032, 11

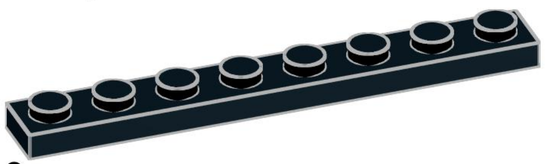

3x
3460, 11

2x
3707, 11

4x
4162, 11

3x
3702, 11

2x
3007, 11

9x
40490, 11

1x
3035, 11

12x
4477, 11

2x
3737, 11

6x
2730, 11

3x
3832, 11

2x
3030, 11

9x
32525, 11

1x
60479, 11

3x
3895, 11

1x
3029, 11

3x
41239, 11

2x
32278, 11

5x
3703, 11

1x
32002, 85

2x
10928, 85

2x
3713, 86

4x
42610, 86

12x
3673, 86

4x
56902, 86

3x
4519, 86

2x
94925, 86

12x
30374, 86

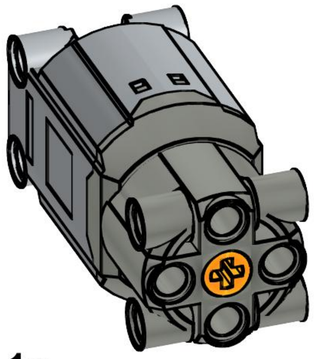

1x
99499c01, 86

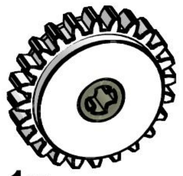

1x
60c01, 1

12x
32062, 5

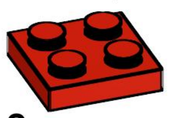

2x
3022, 5

2x
24316, 88

1x
15462, 88

5x
3024, 69

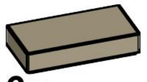

6x
3069b, 69

11x
3023, 69

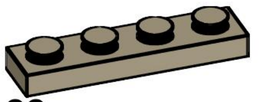

22x
3710, 69

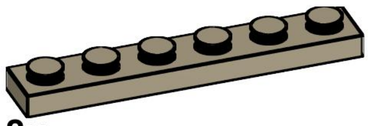

8x
3666, 69

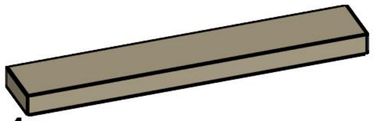

4x
6636, 69

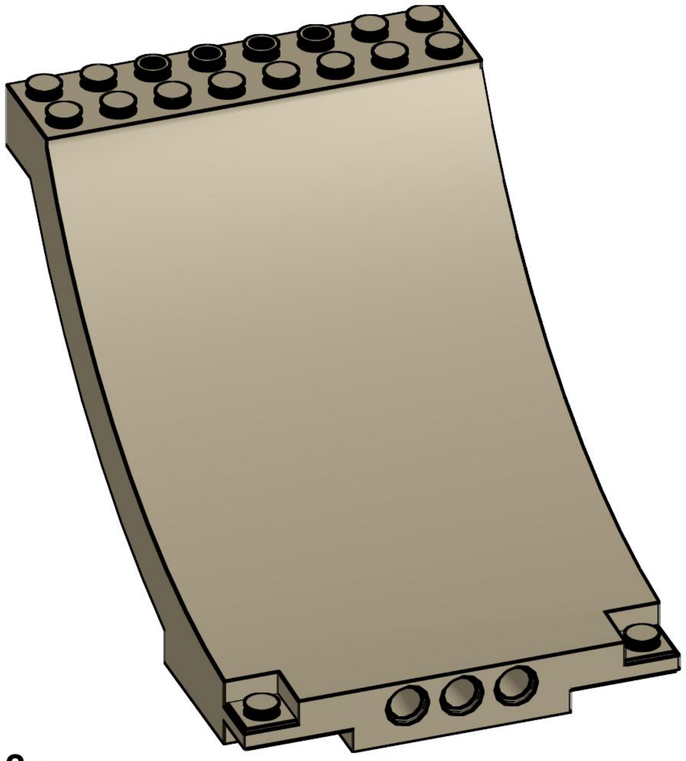

2x
43085, 69

1x
6589, 2

4x
4265c, 3

5x
3070b, 3

8x
3069b, 3

1x
32013, 3

12x
32039, 3

8x
6632, 3

3x
63864, 3

5x
32054, 3

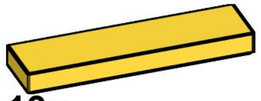

13x
2431, 3

8x
32250, 3

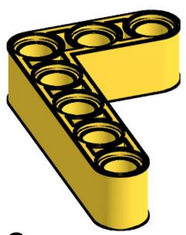

2x
32526, 3

1x
44294, 3

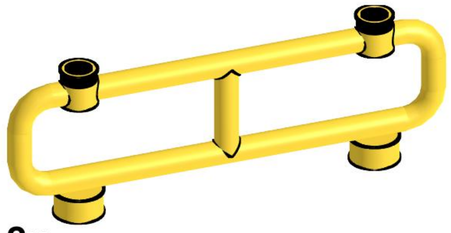

2x
2486, 3

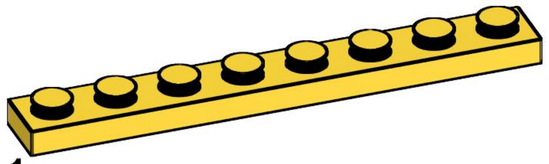

1x
3460, 3

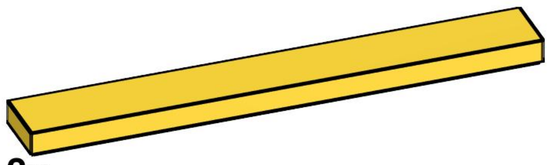

2x
4162, 3

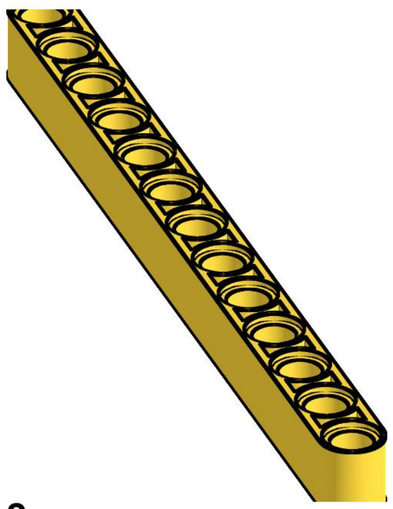

2x
41239, 3

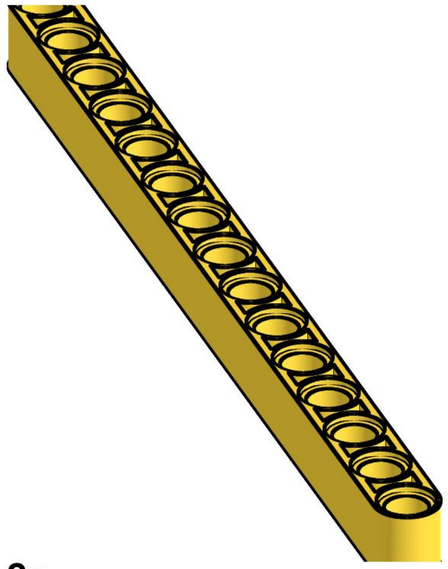

2x
32278, 3

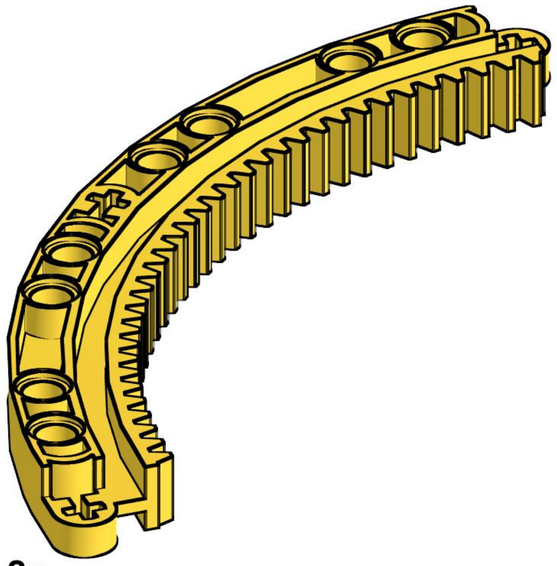

8x
24121, 3

6x
43093, 7

5x
6558, 7

Module Revision Notes

Version 1.0 - Initial Release

Version 1.1 - Replaced 2 of 8L axles used to brace the non-basket sides of the rotating wheel with 3 of 2L axle connectors, to stiffen the bracing of the wheel to remove the ability to "squish" the sides of the wheel if it is picked up by the wheel accidentally, instead of picked up by the frame.
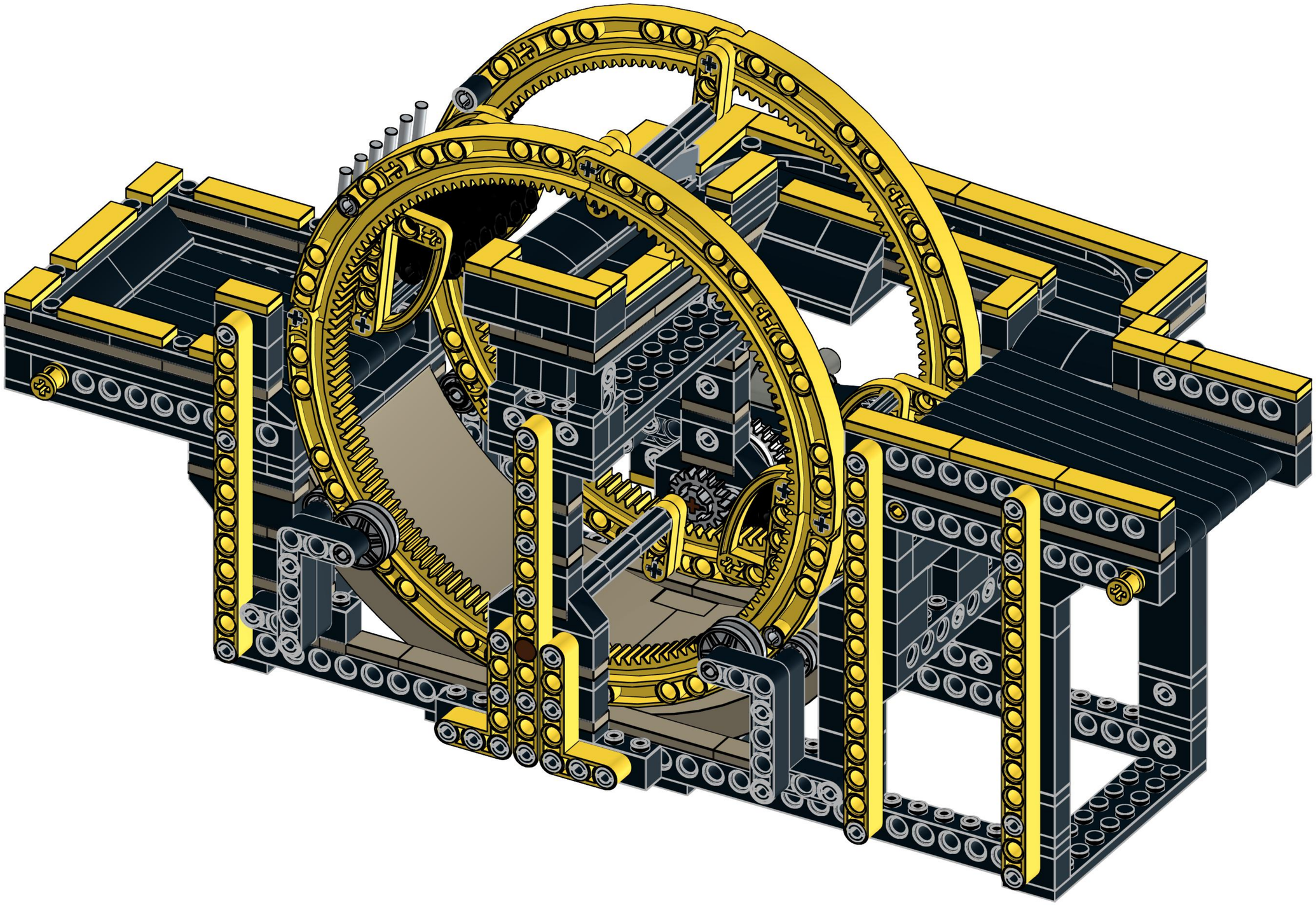
Version 1.2 - Moved Tan bevel gear to opposite side of the motor driven gear, resulting in the tumble wheel rotating in the correct direction when a train controller is turned clockwise, as is the preferred use at collaborative GBC displays. No Partlist changes. -- 02-Jan-19