BAT WHEEL

ROBIN EDITION

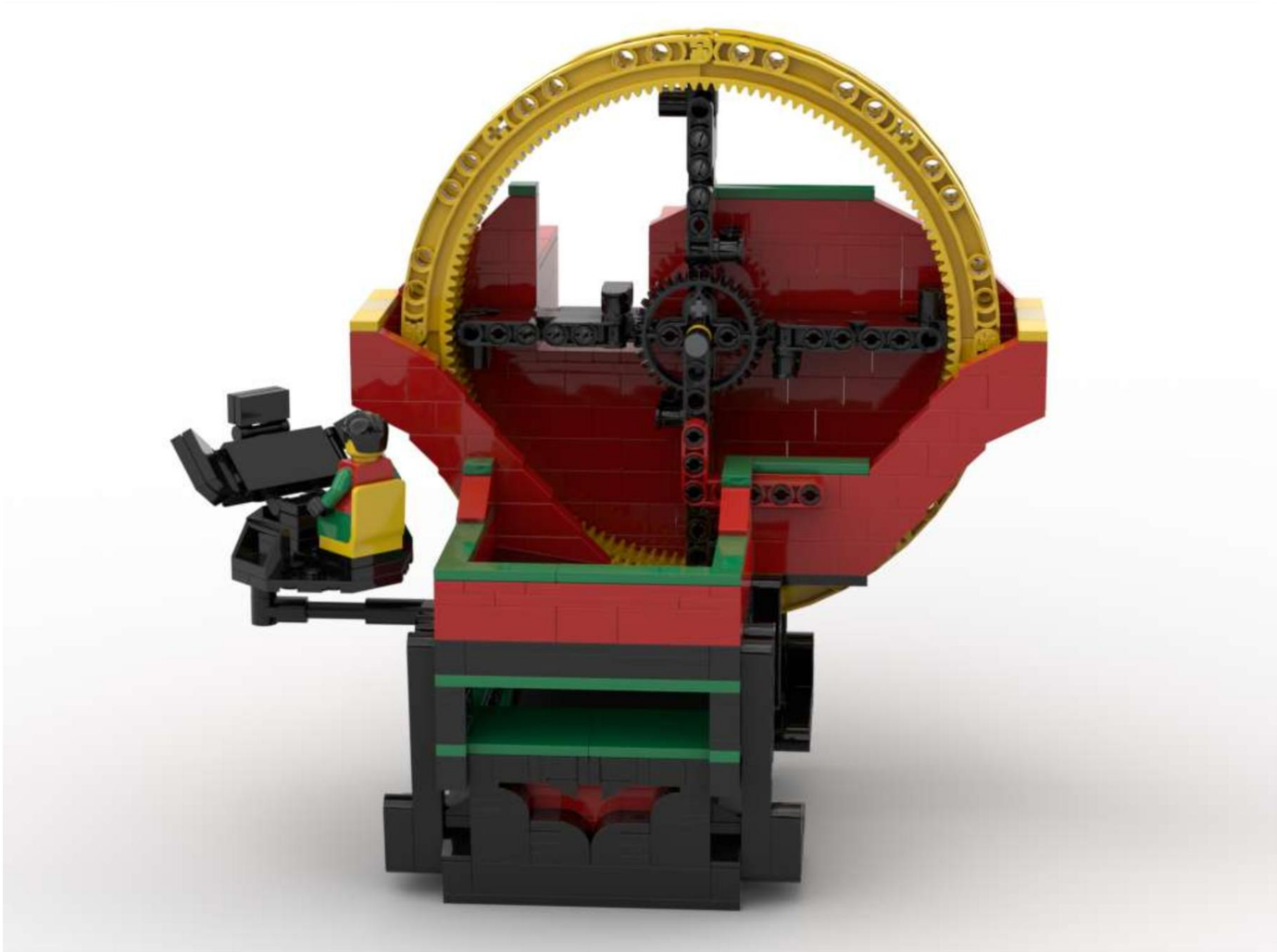

Designed by
Ryk Field
2019

REF05
Version 1.0

Choose Your Superhero

The Bat Wheel is available in four editions. Be sure to download the correct instructions and parts list to suit your preferred Superhero.

1

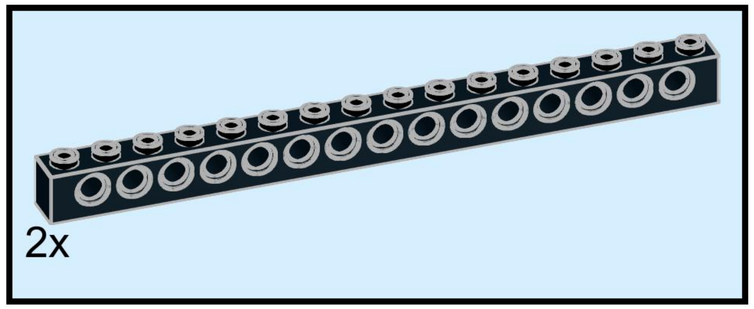

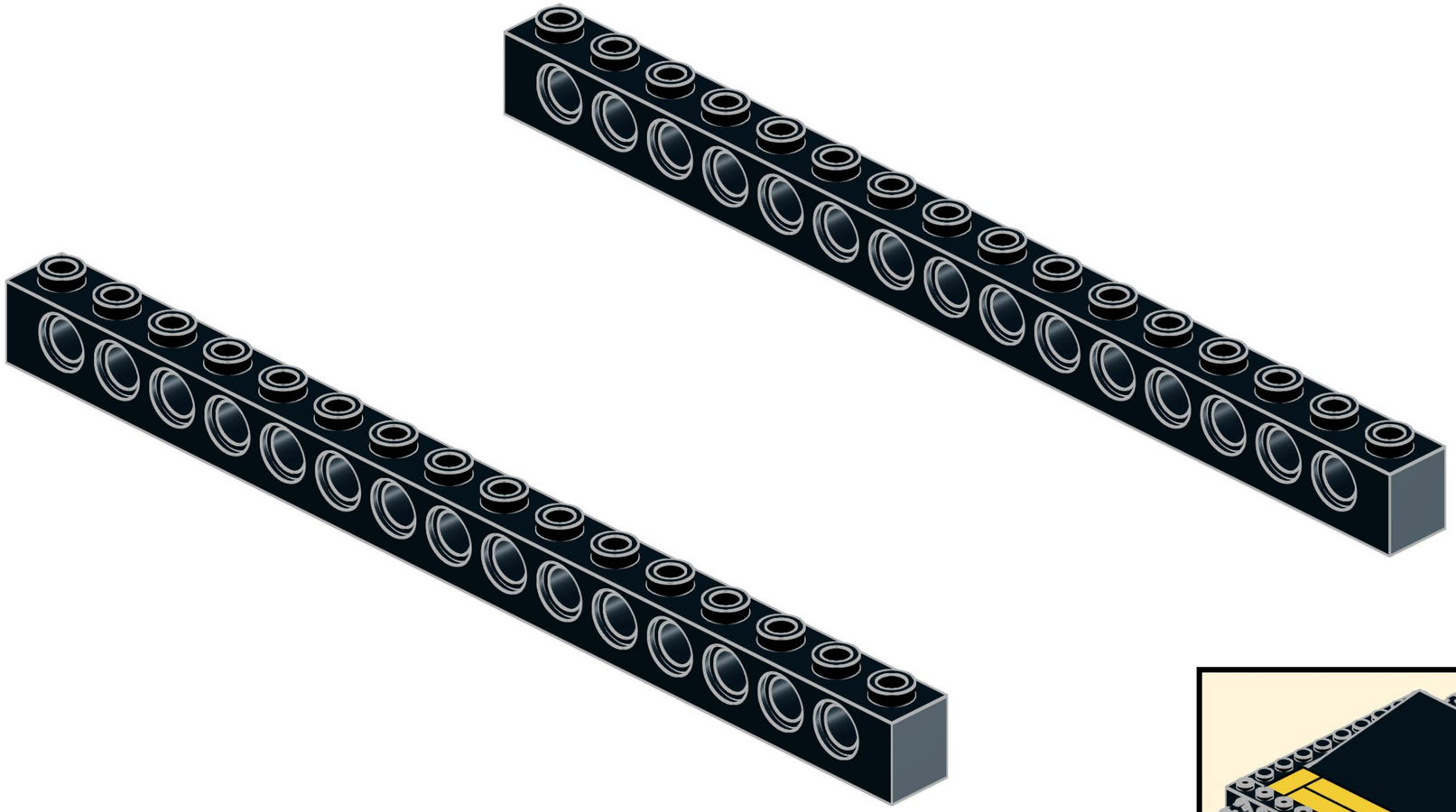

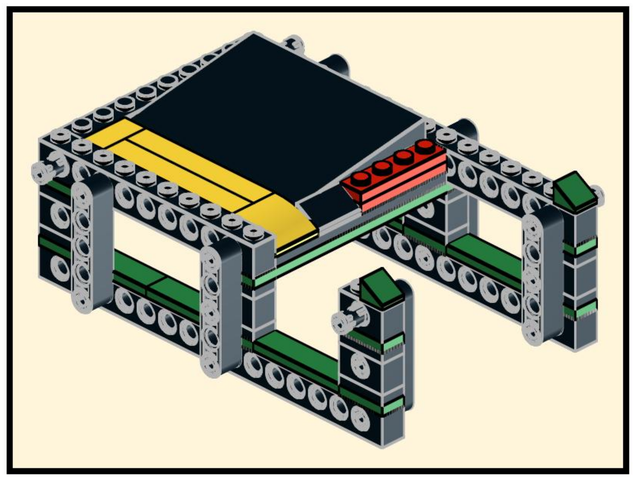

2

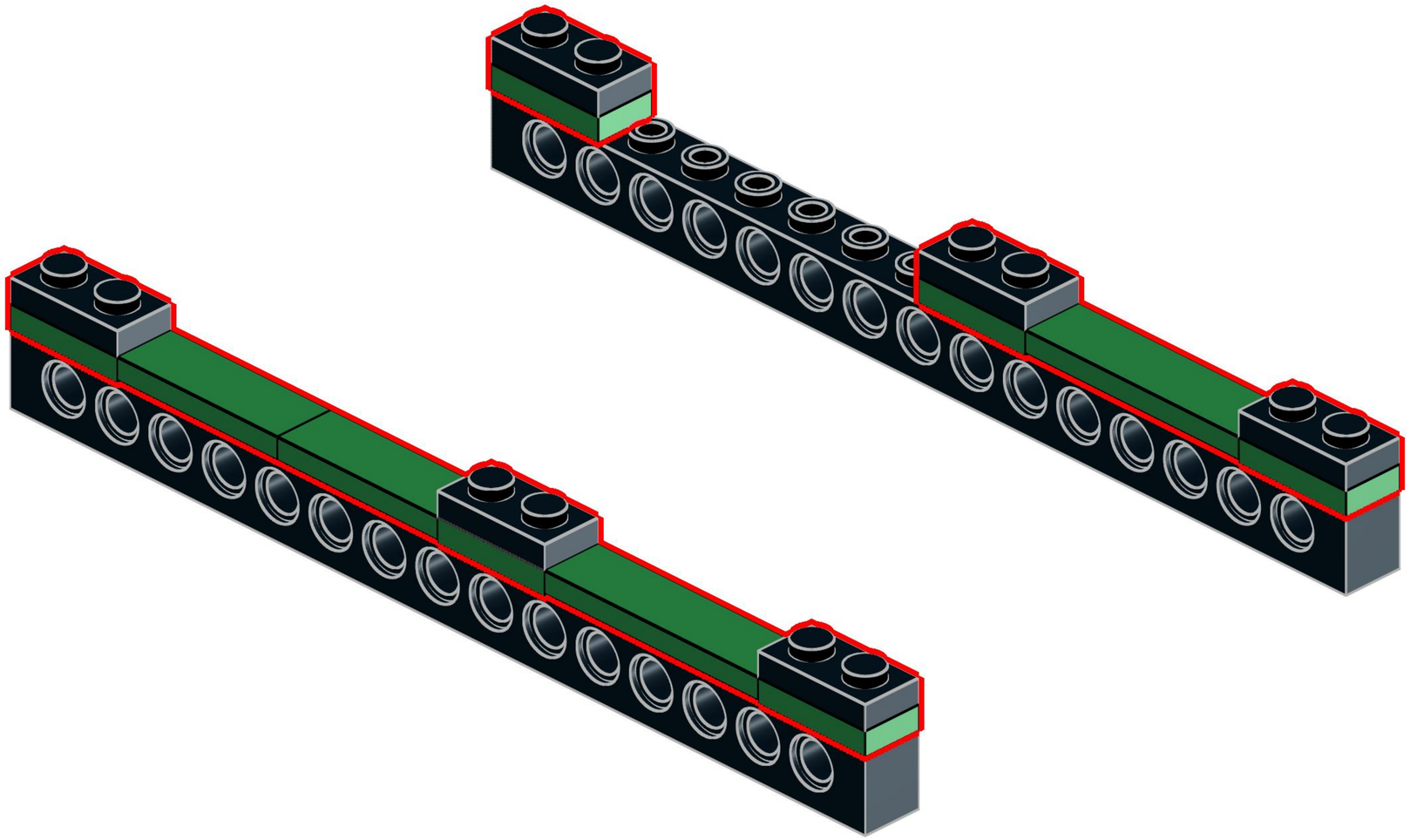

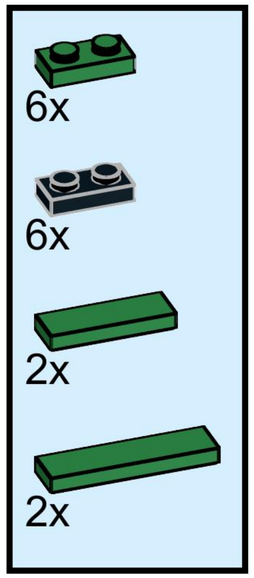

3

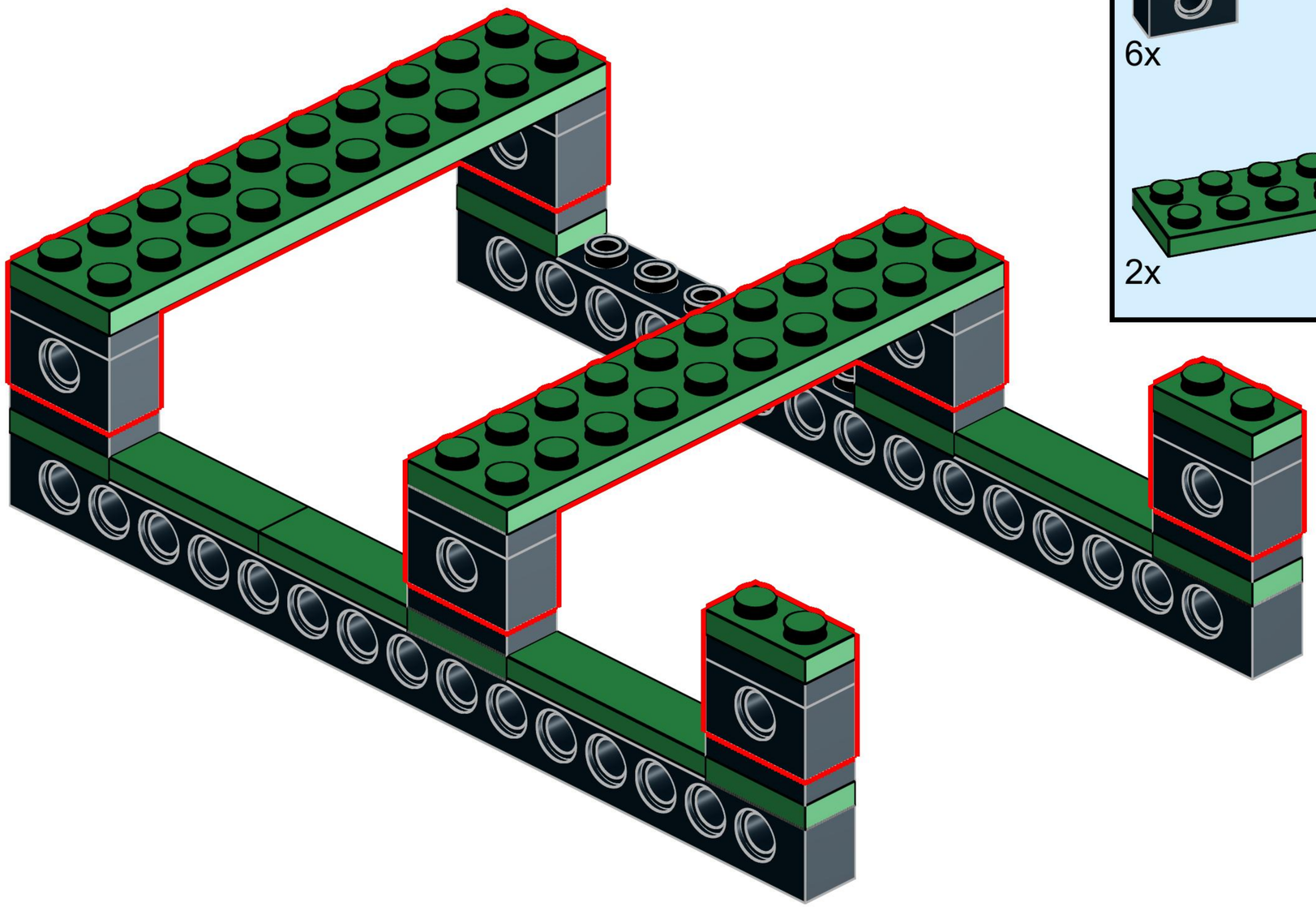

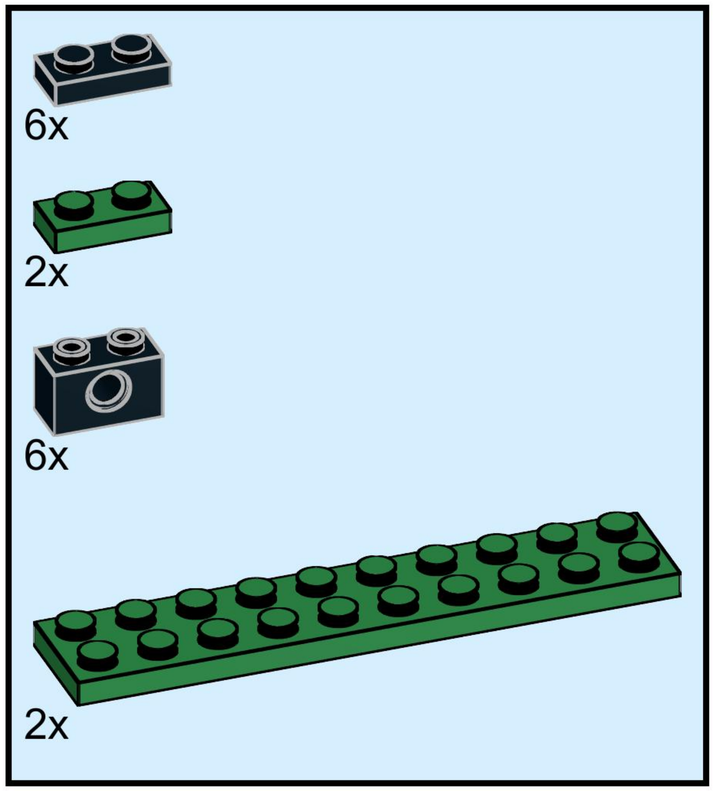

4

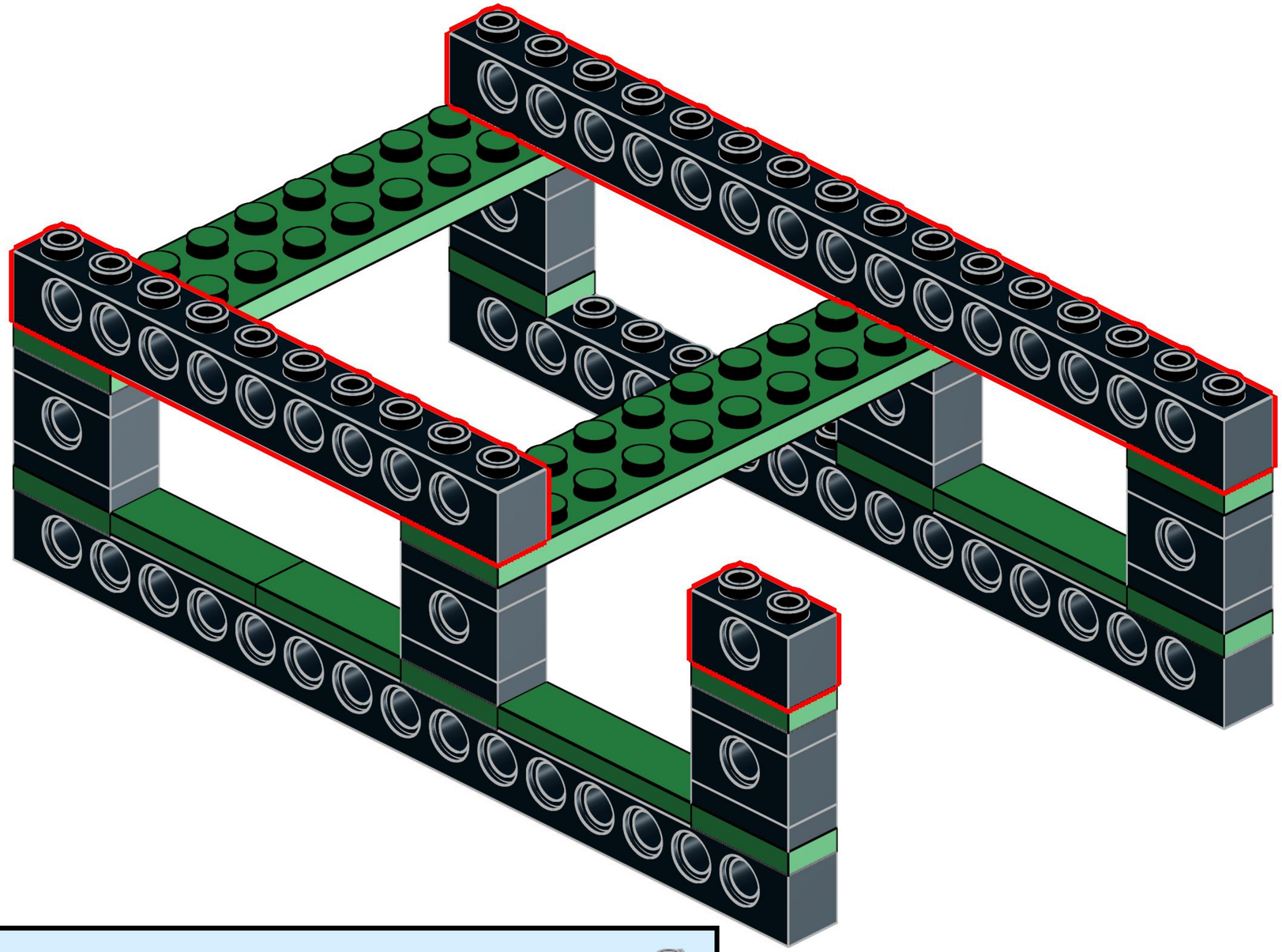

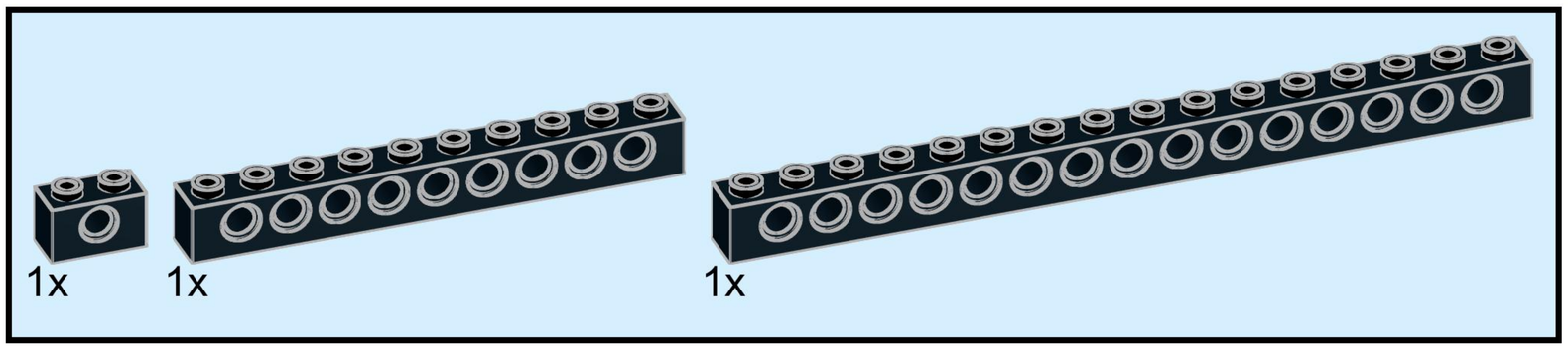

5

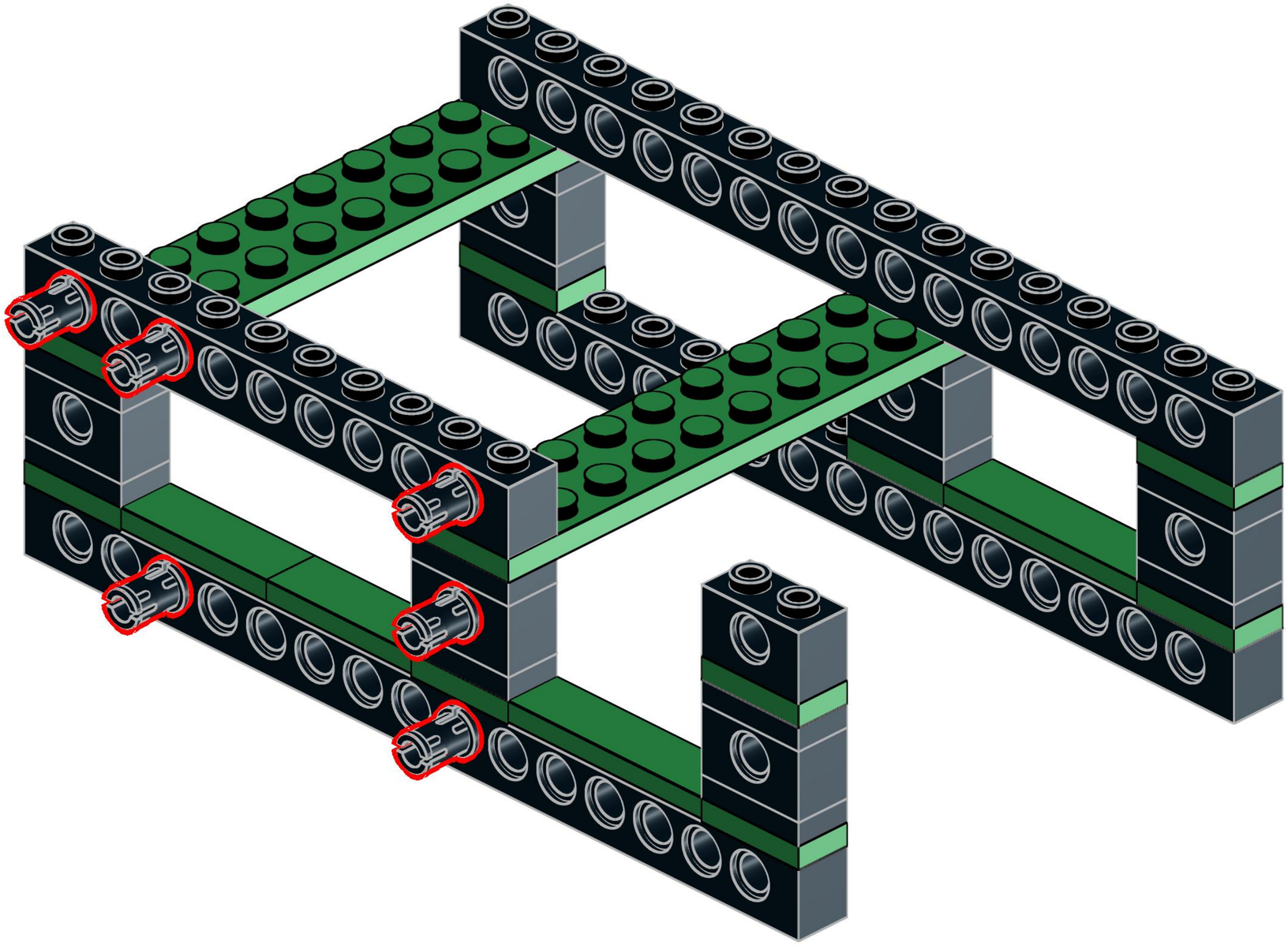

6

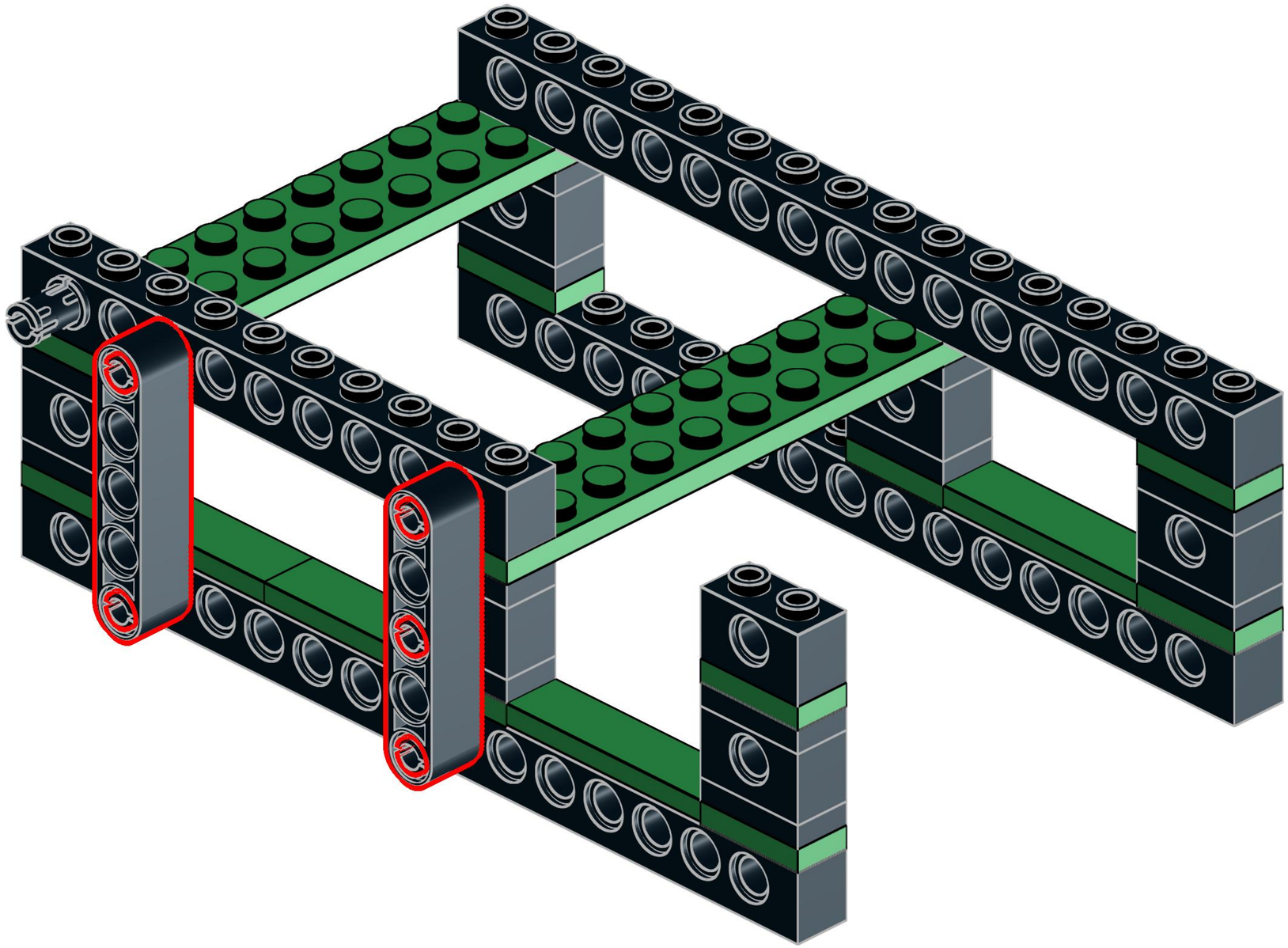

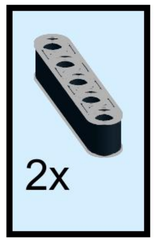

7

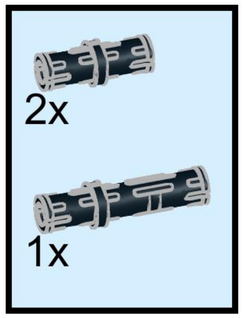

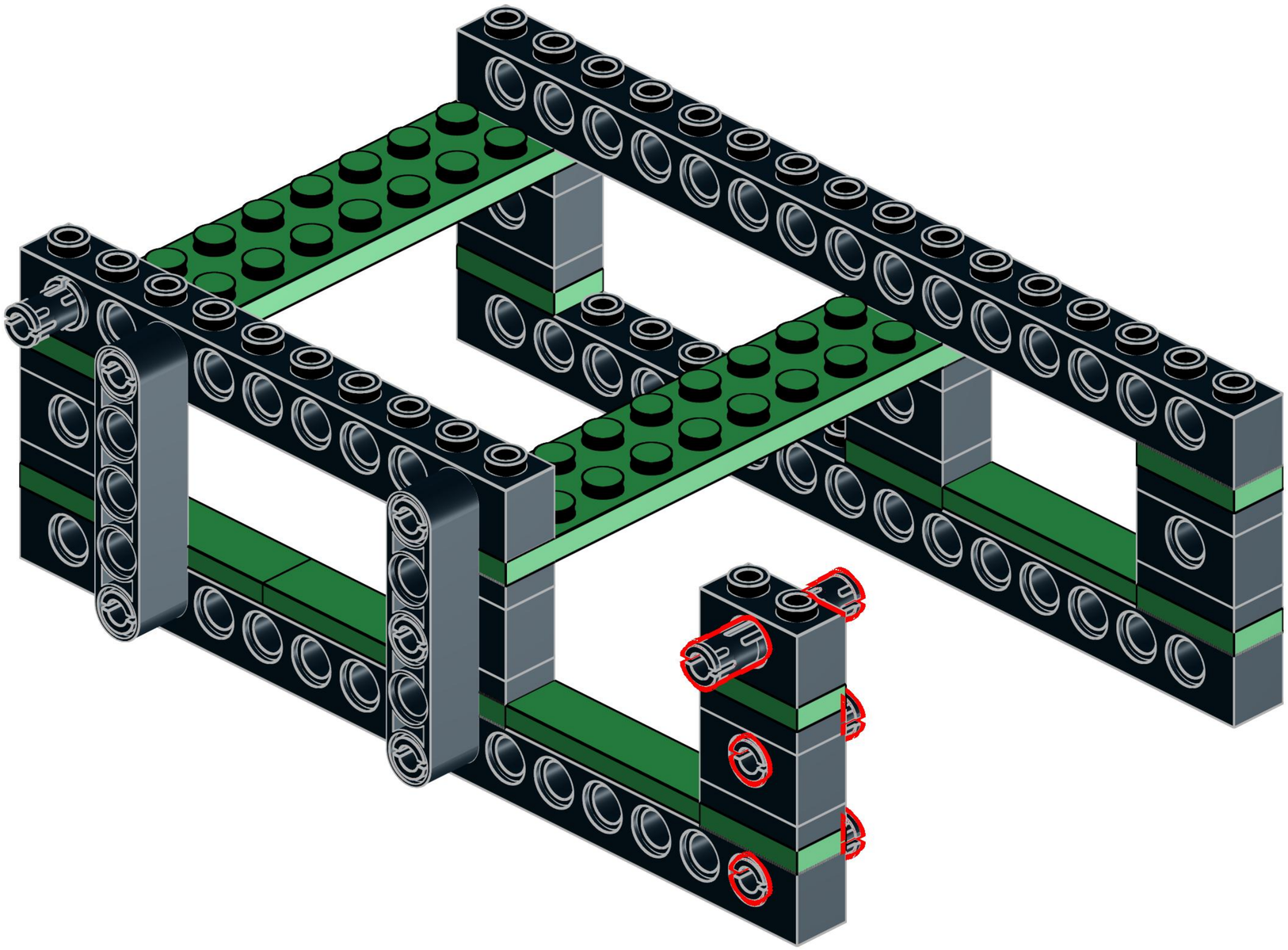

8

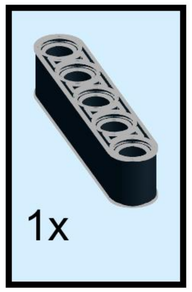

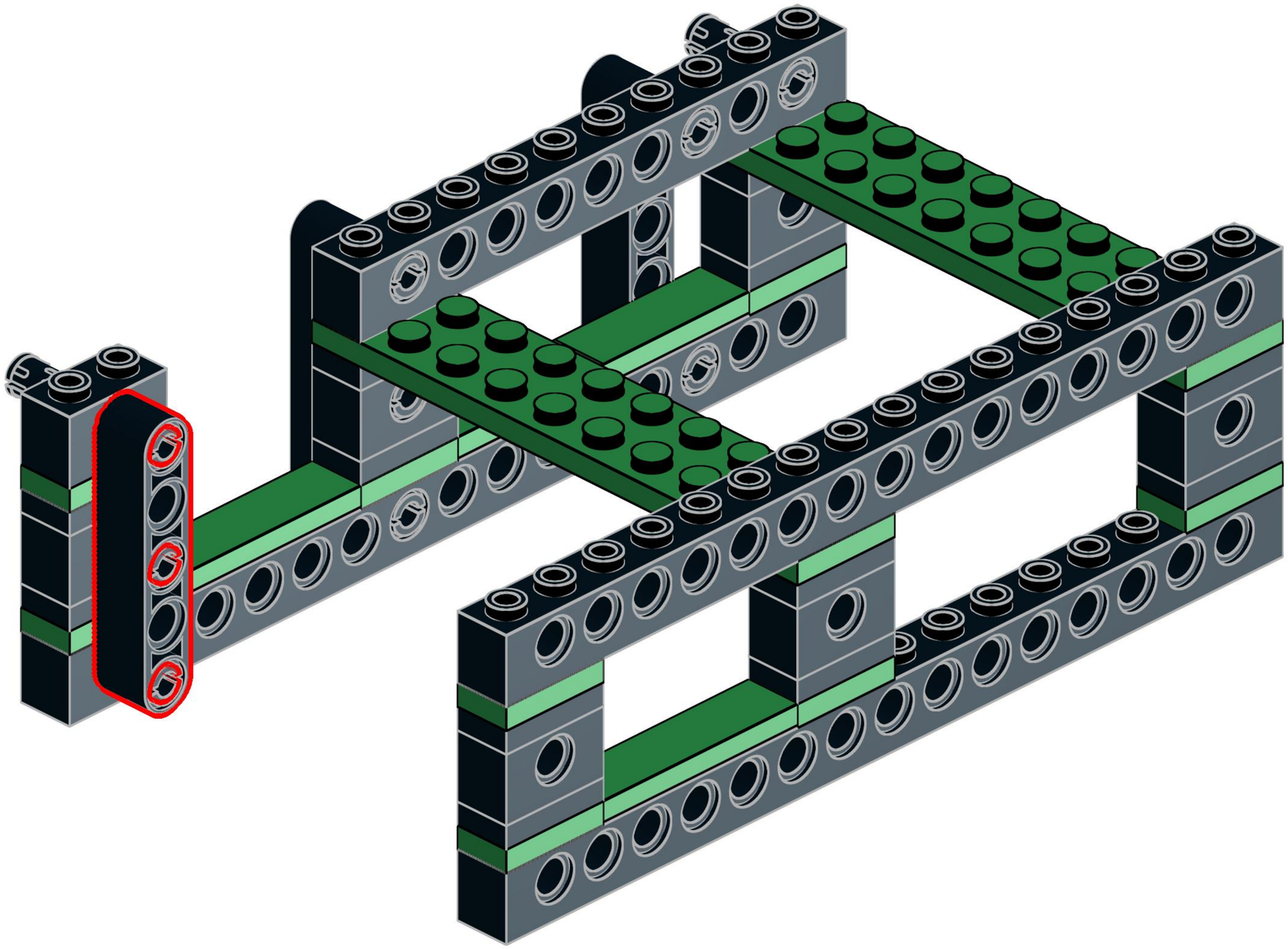

9

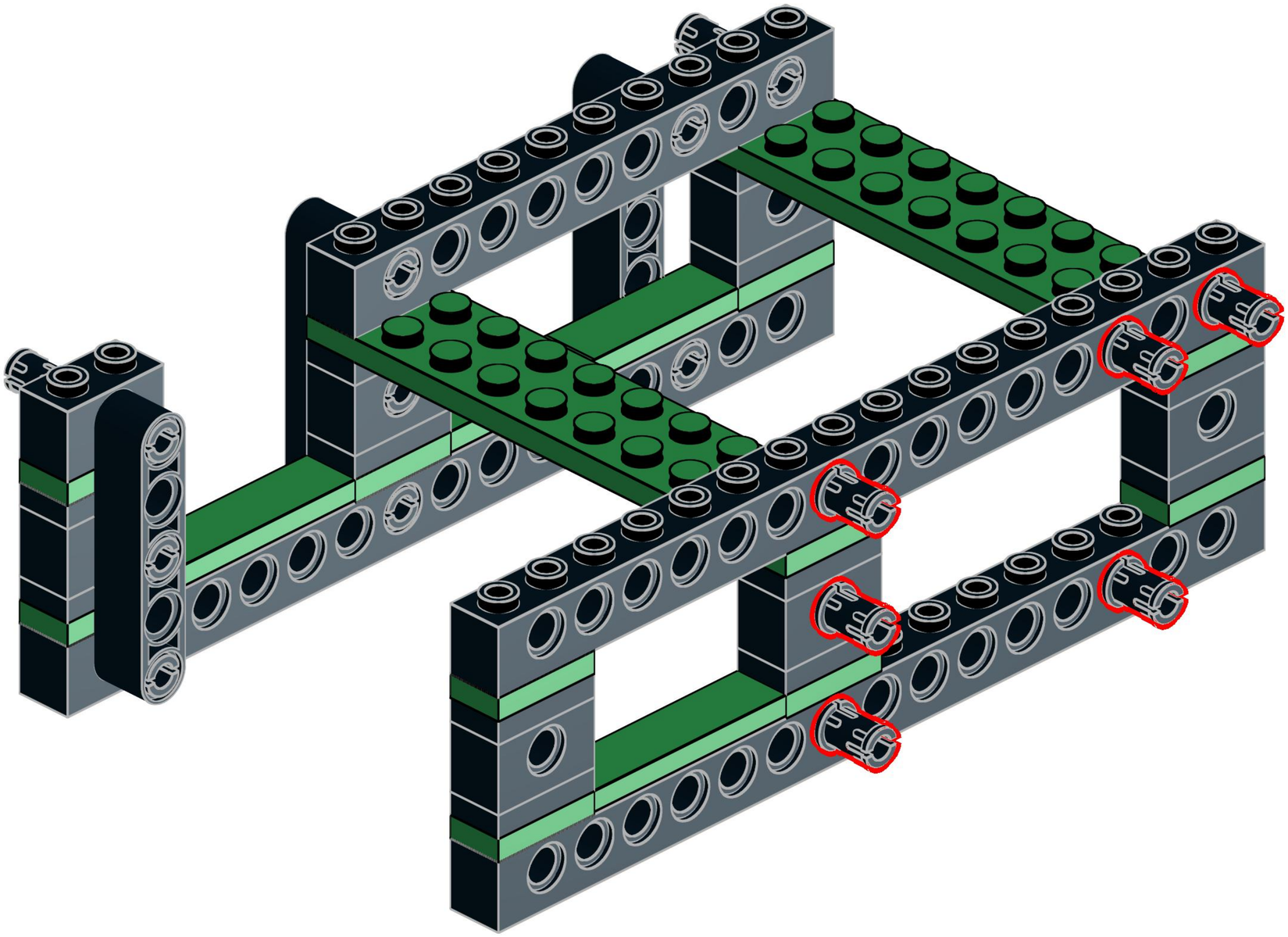

10

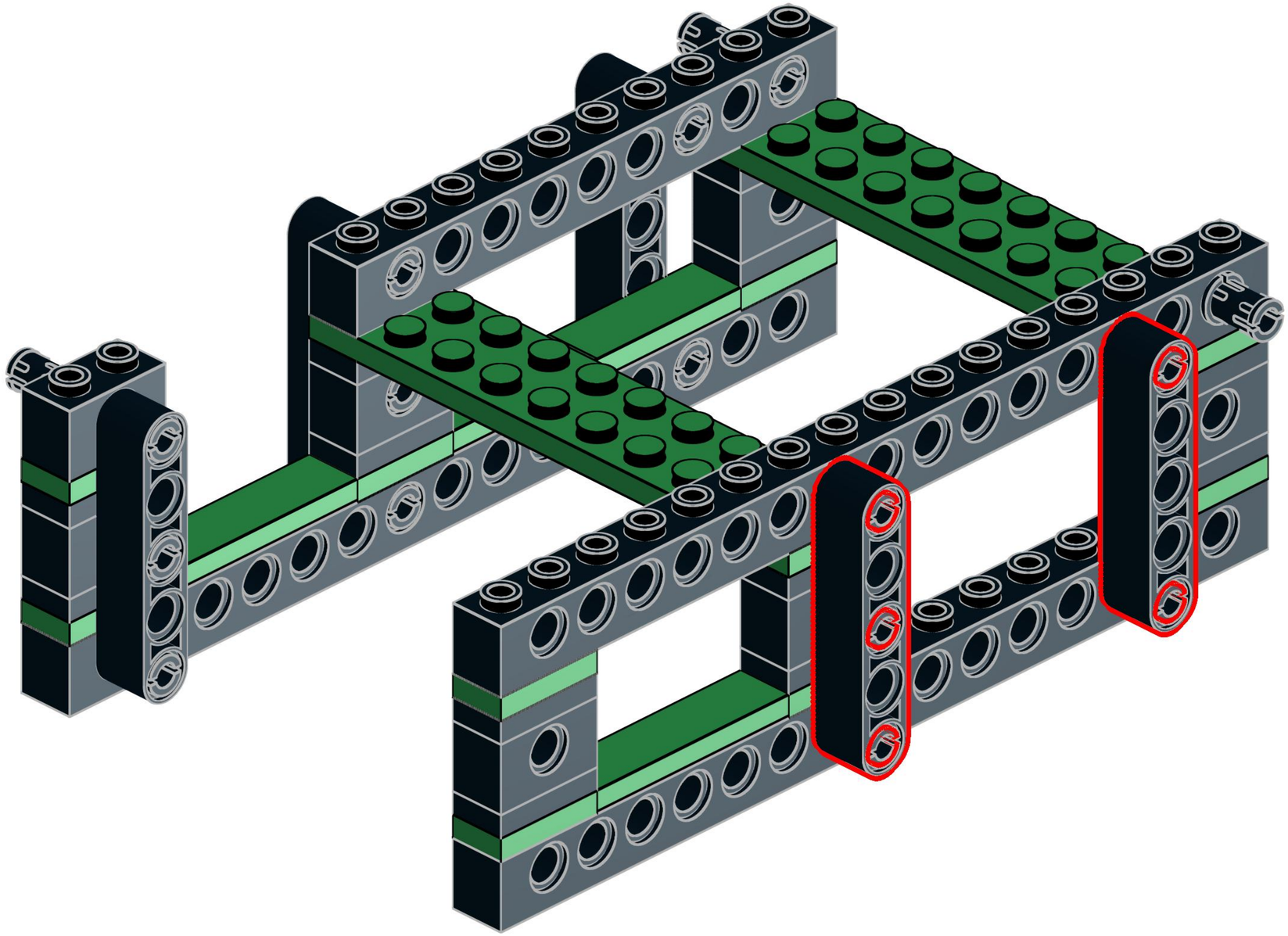

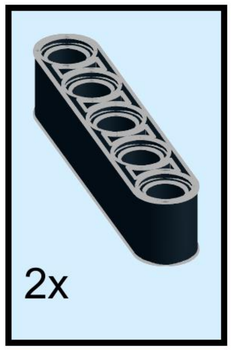

11

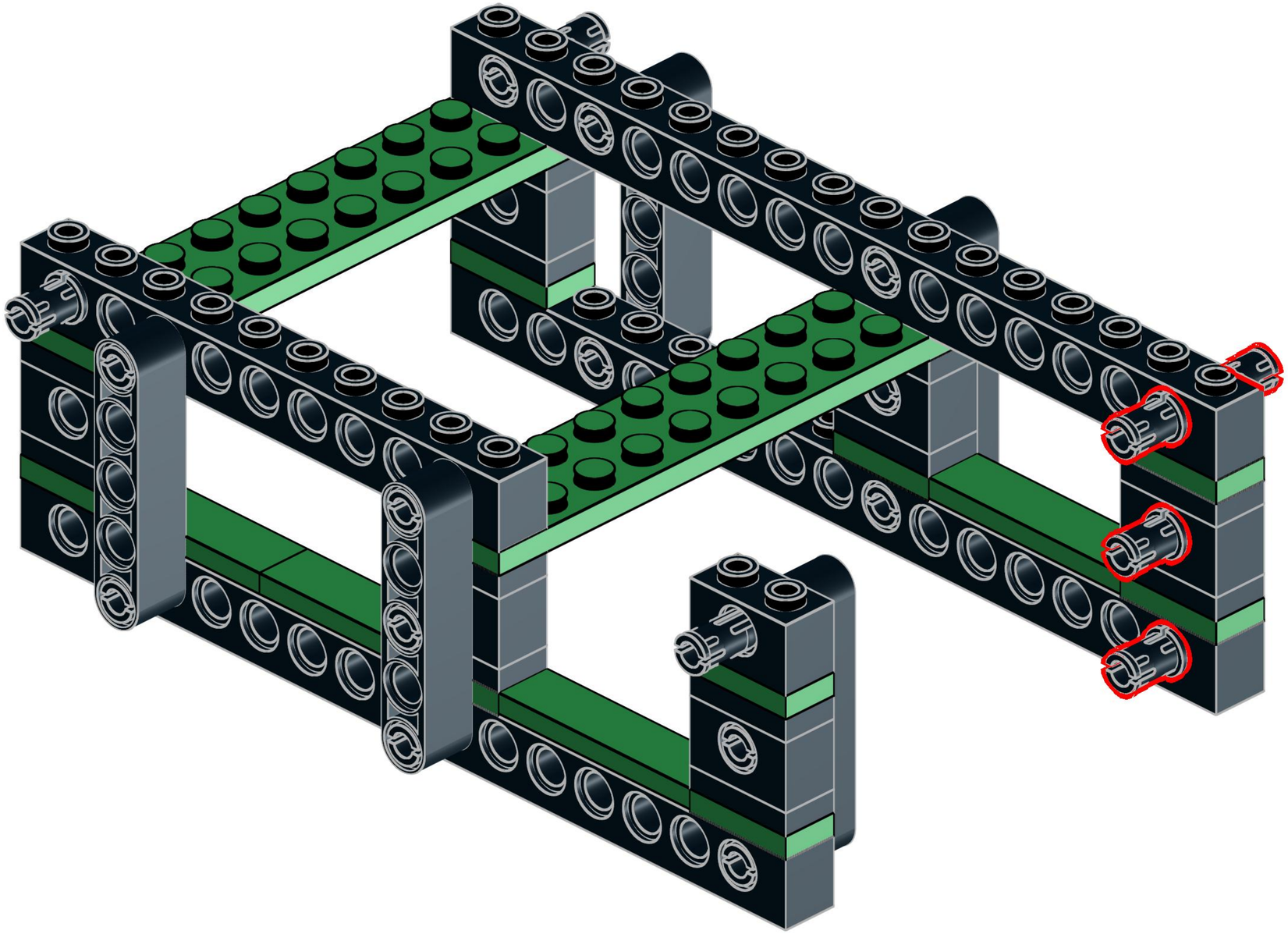

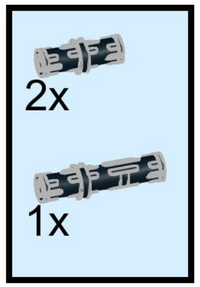

12

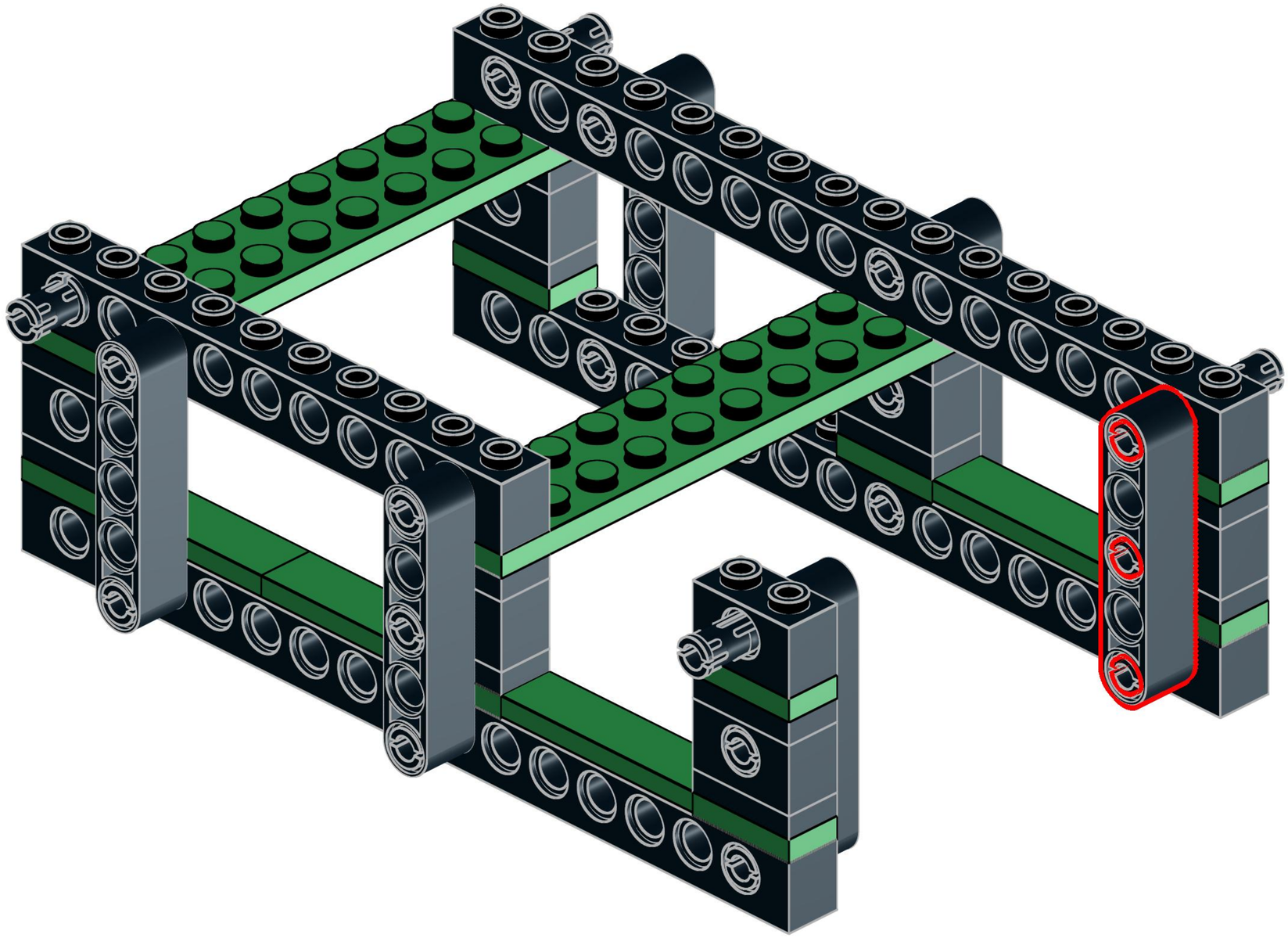

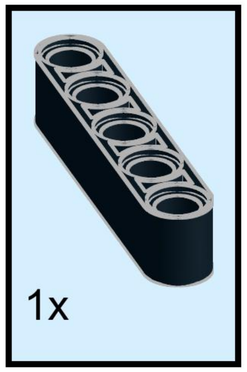

13

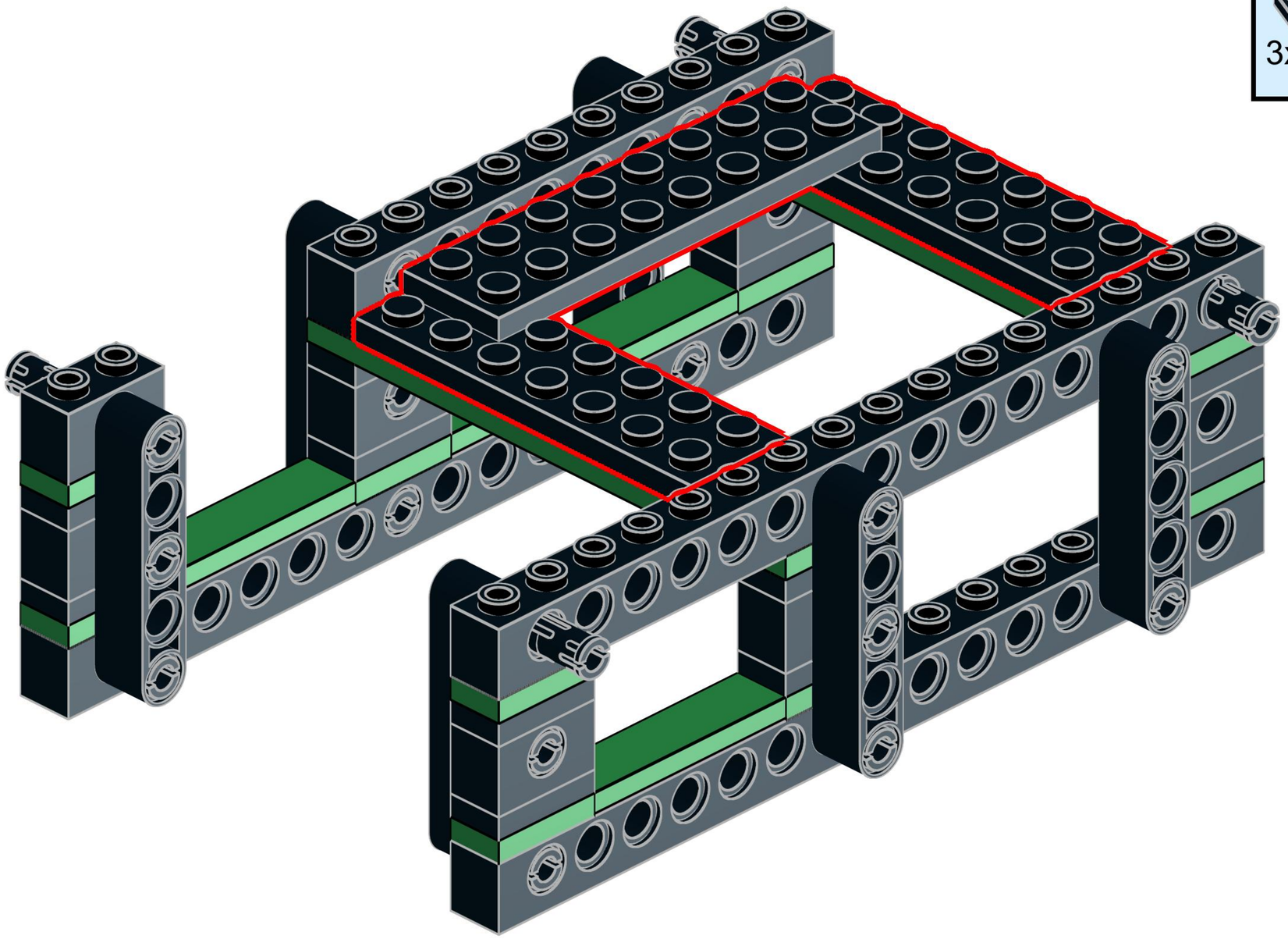

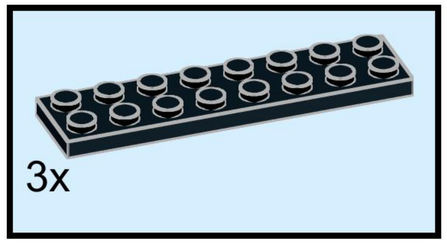

14

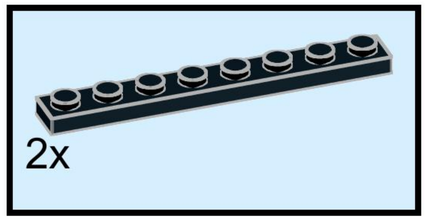

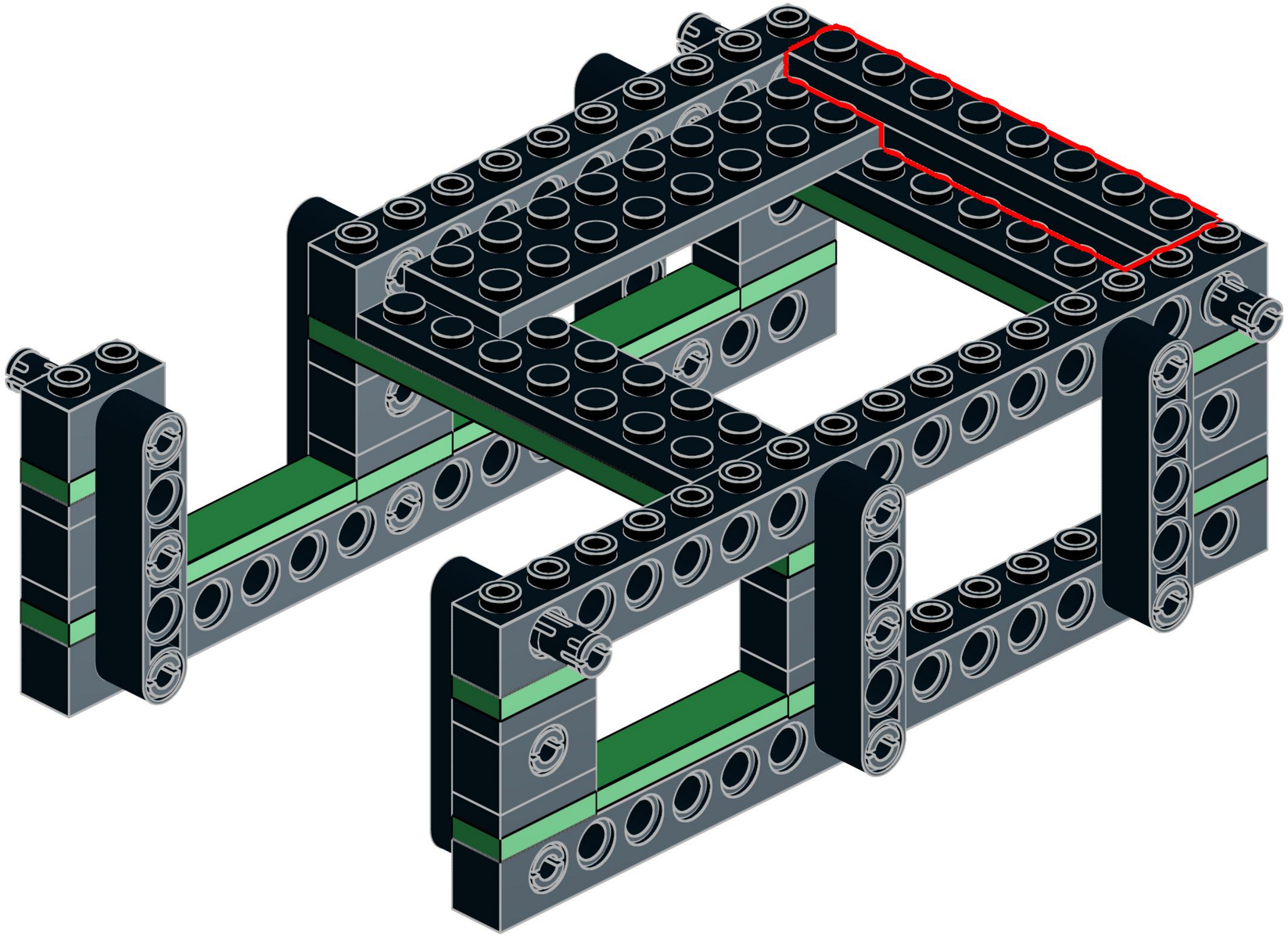

15

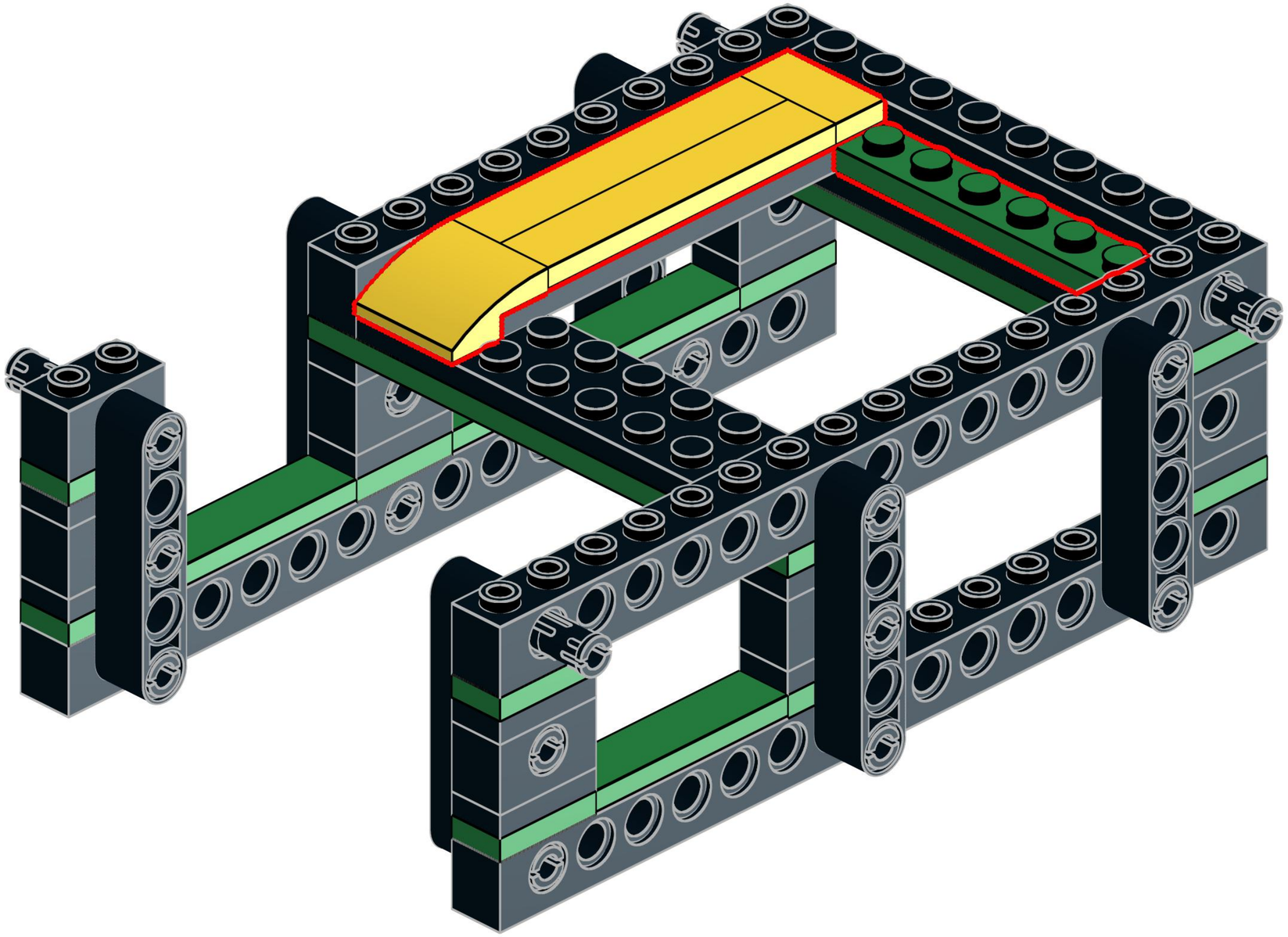

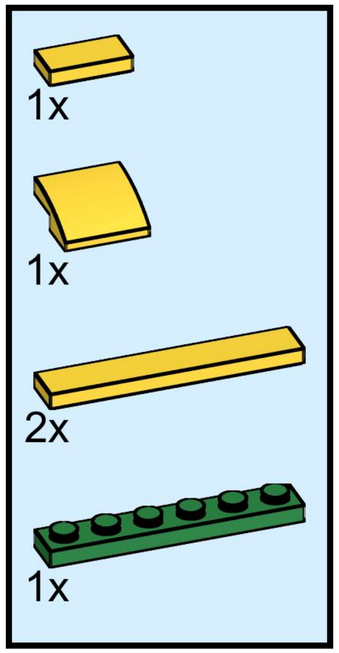

16

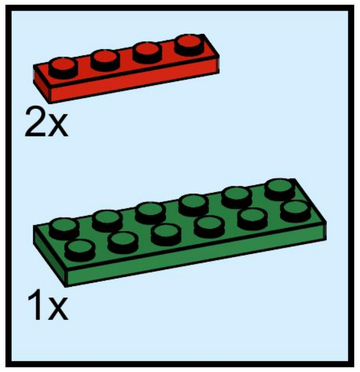

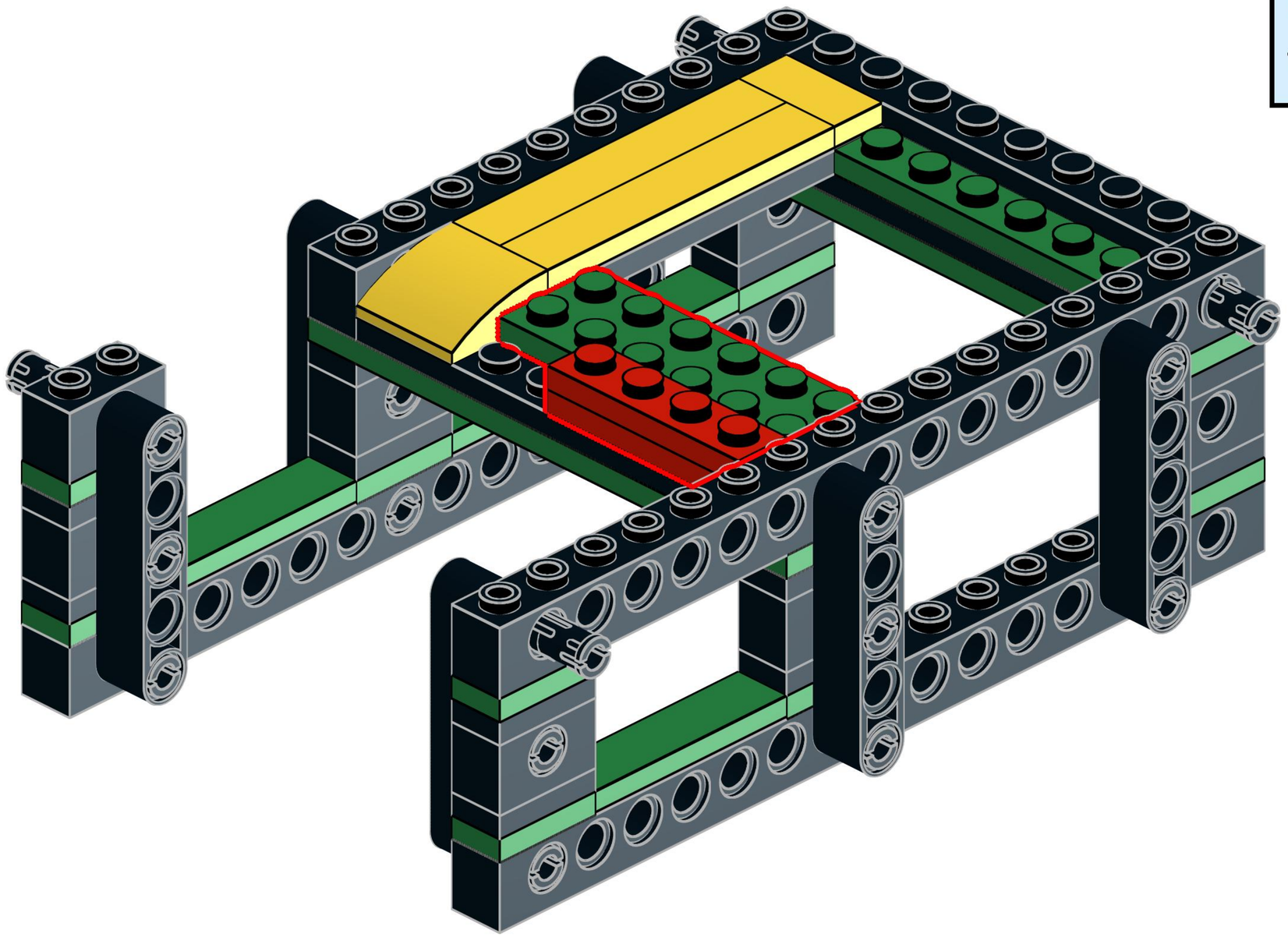

17

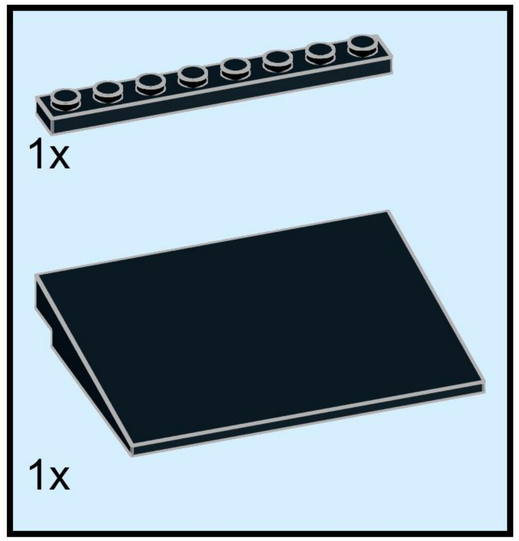

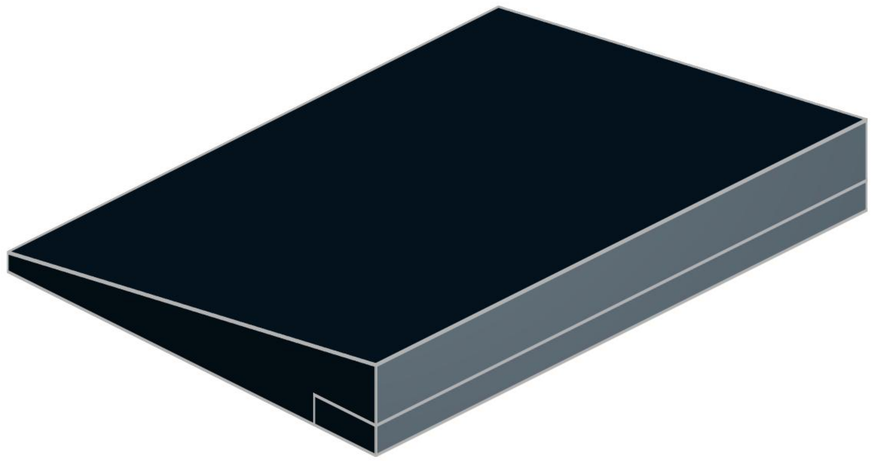

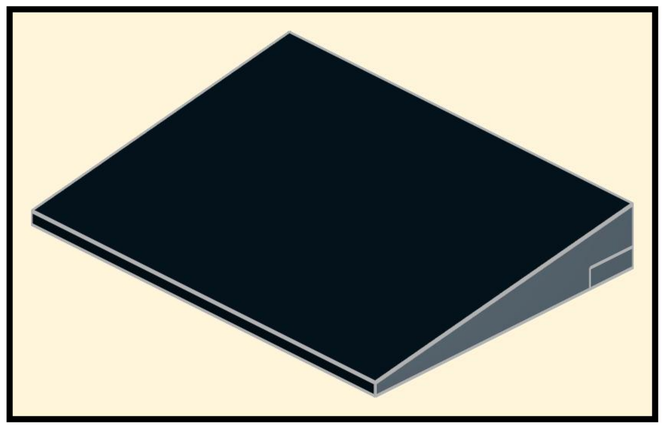

18

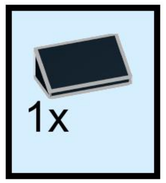

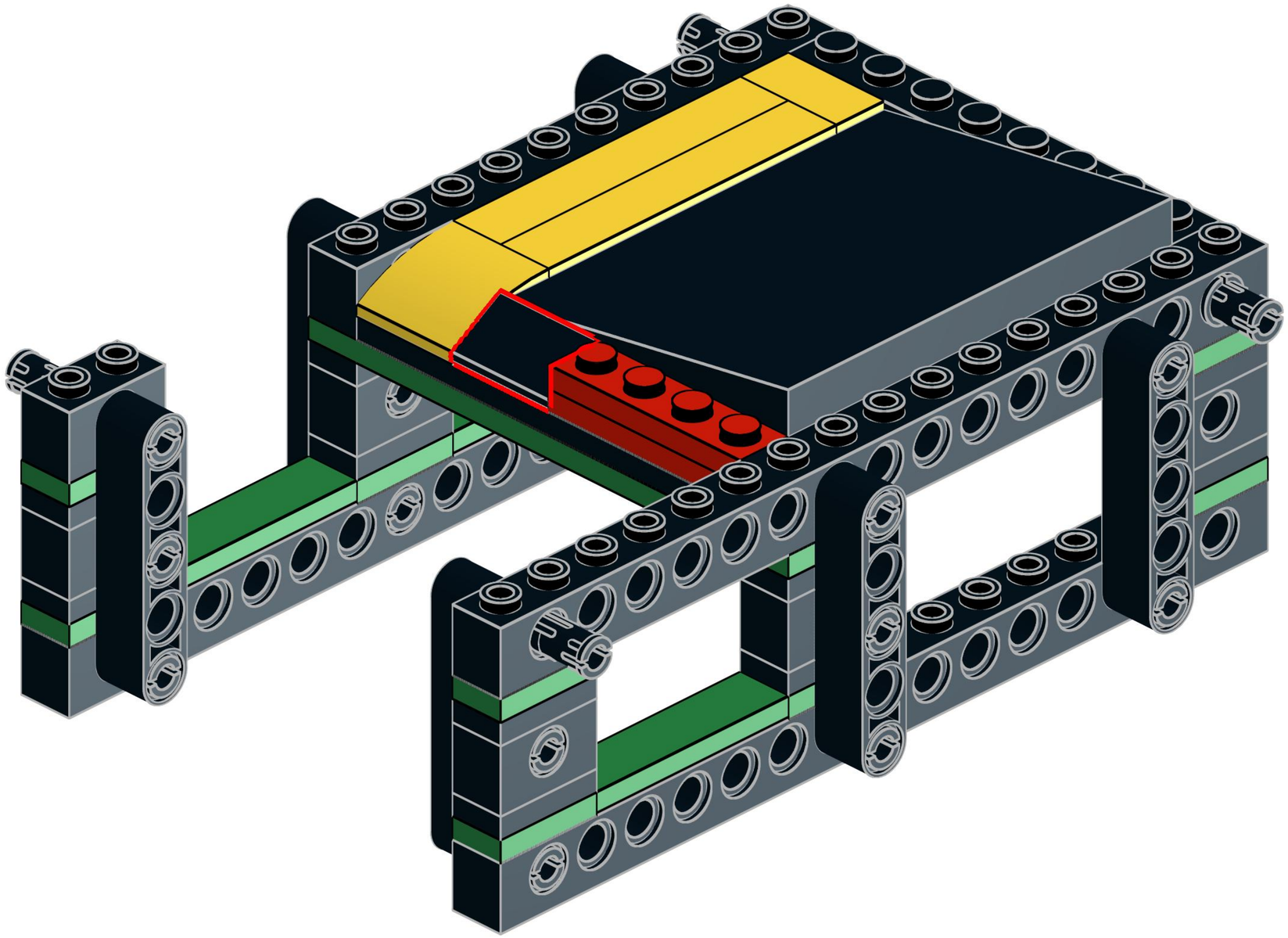

19

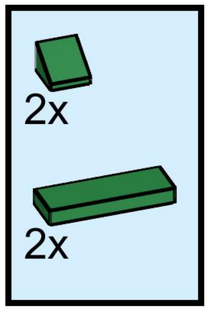

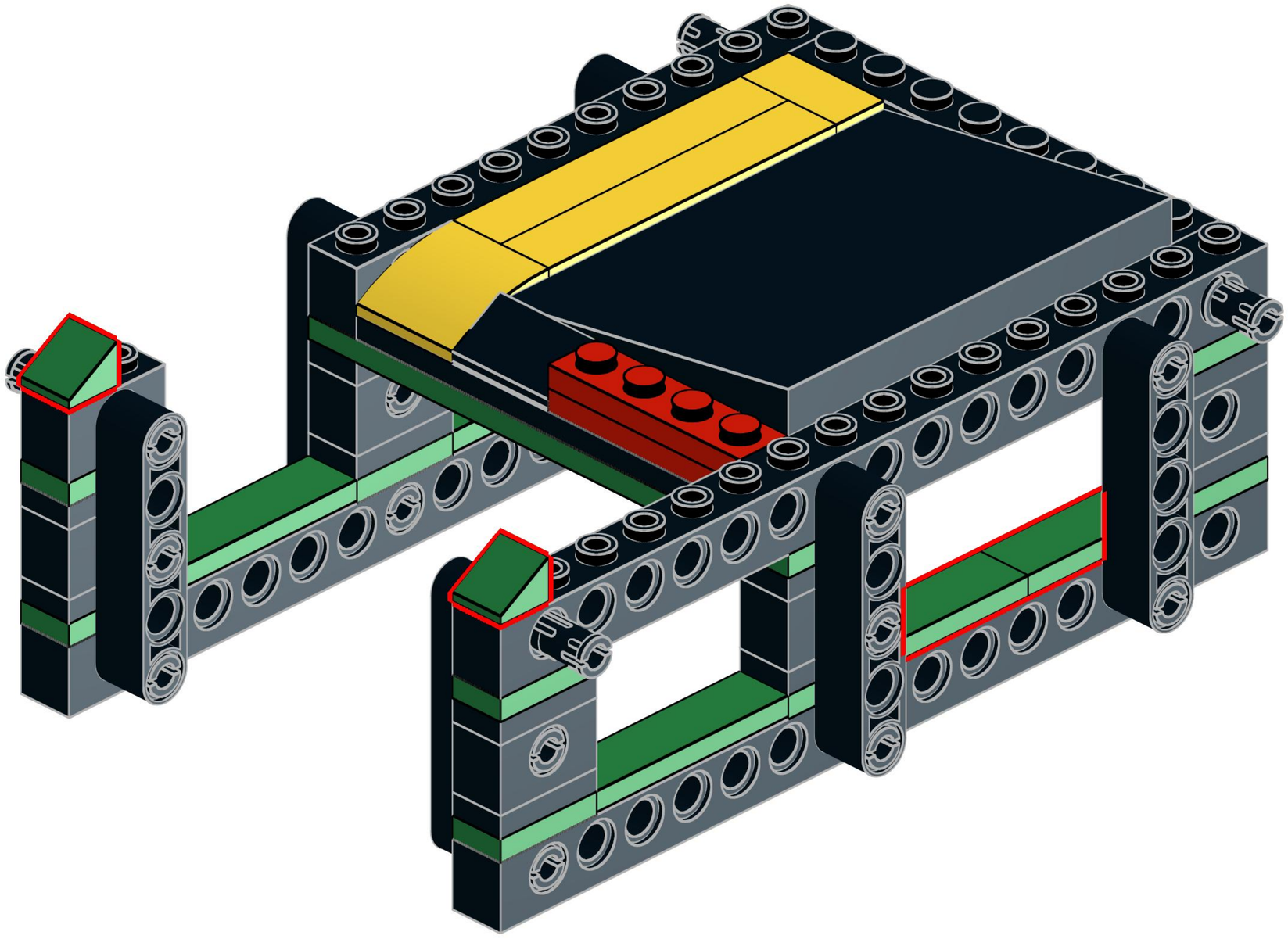

20

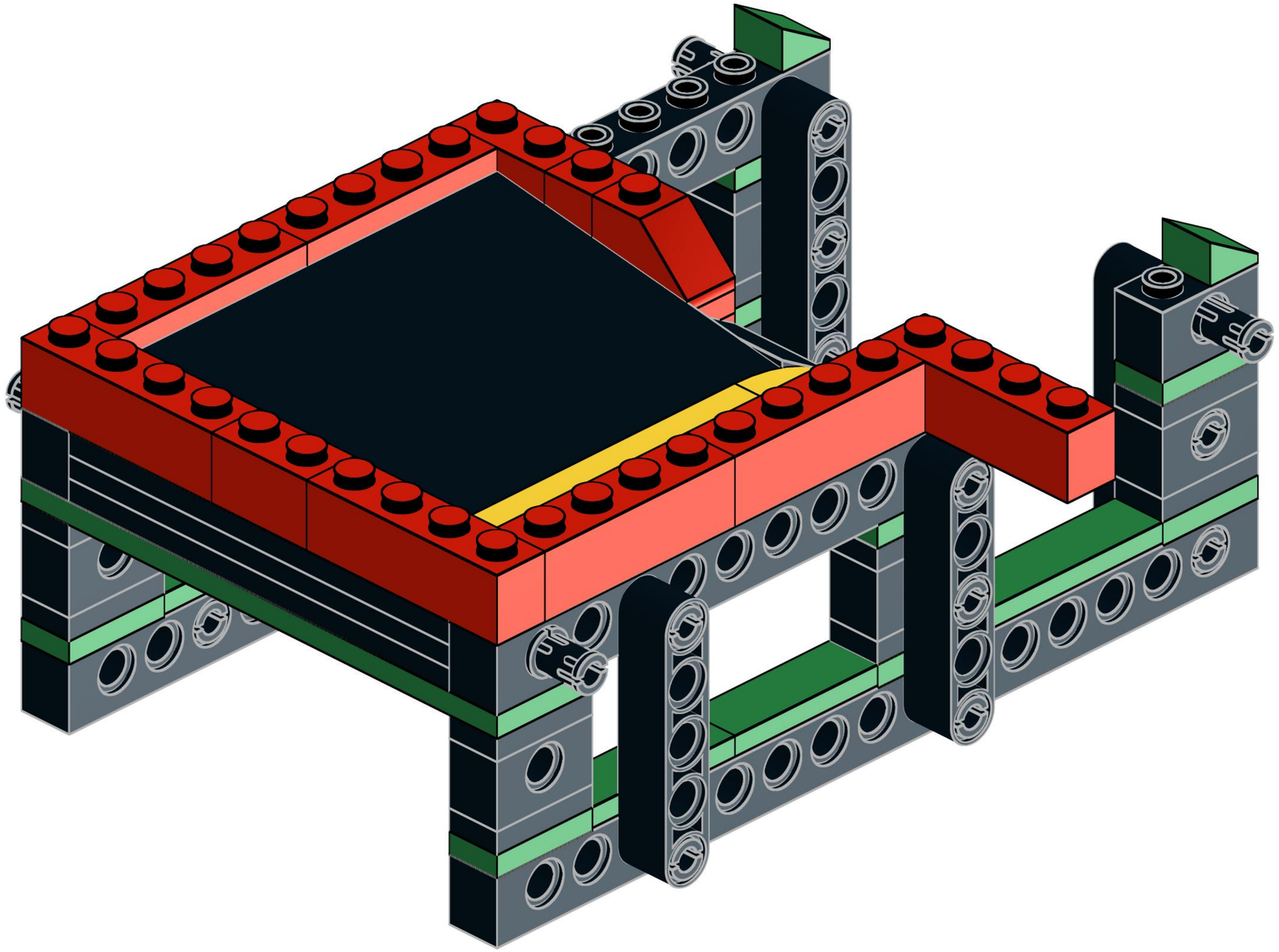

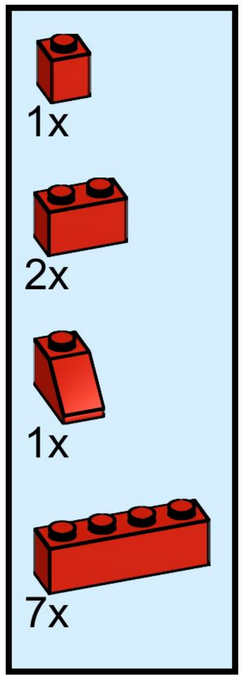

21

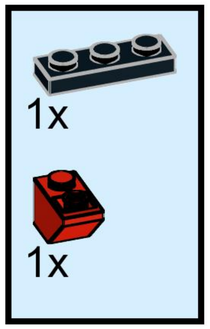

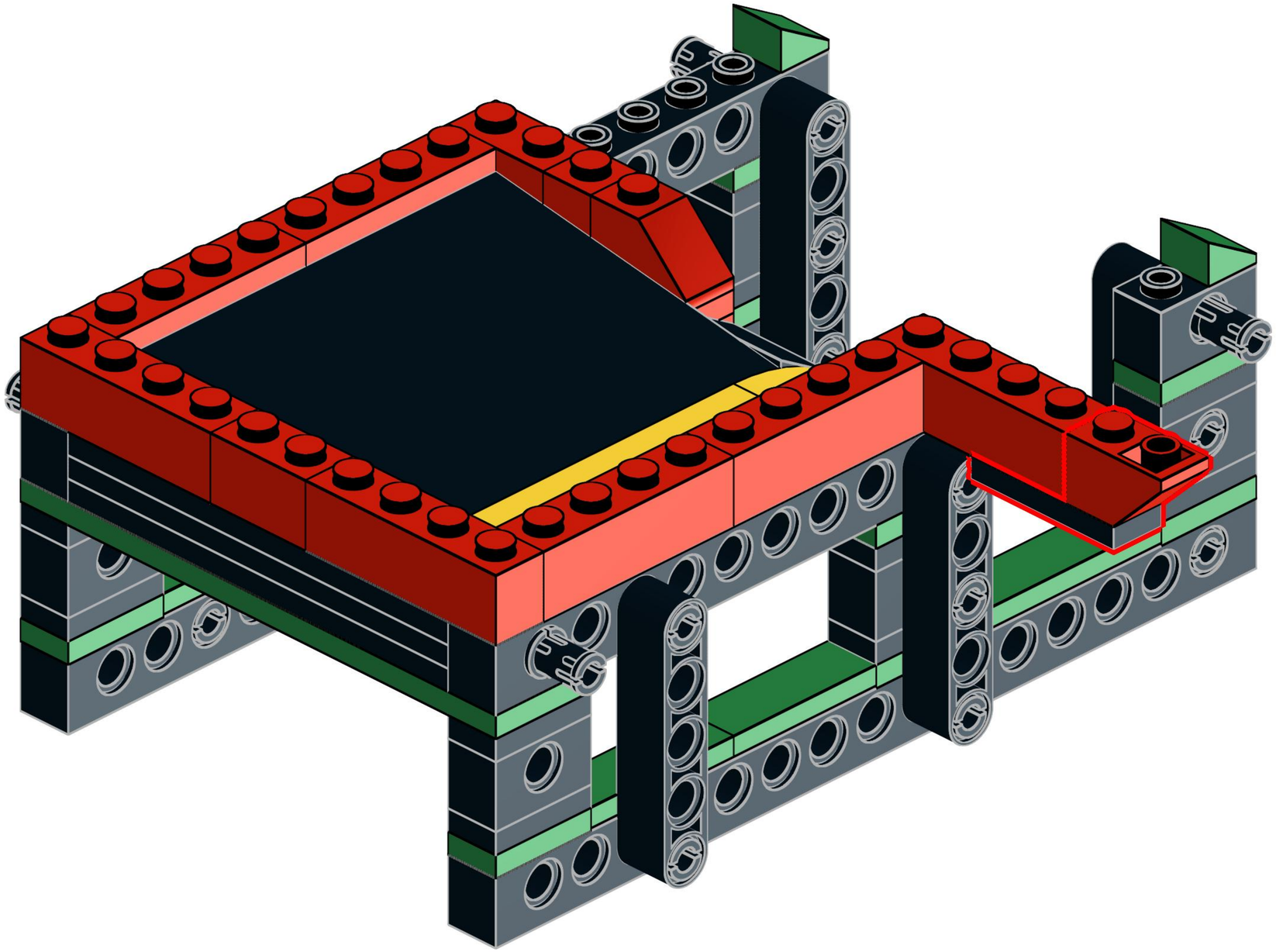

22

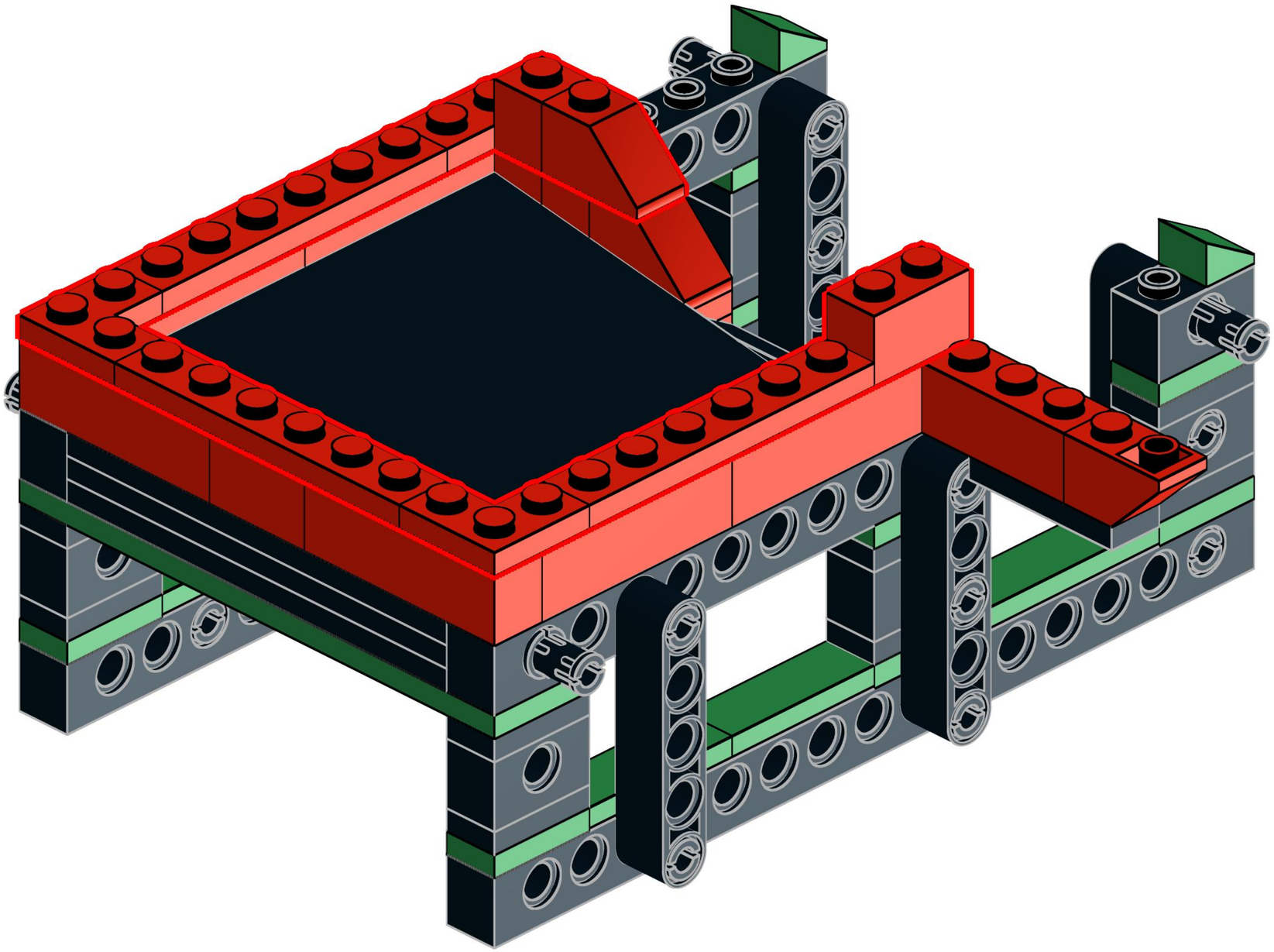

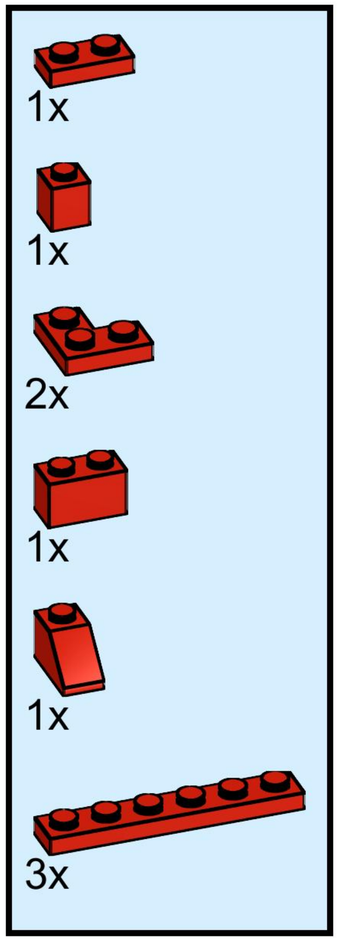

23

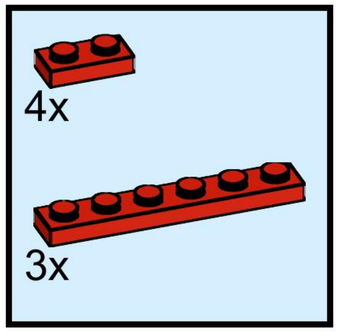

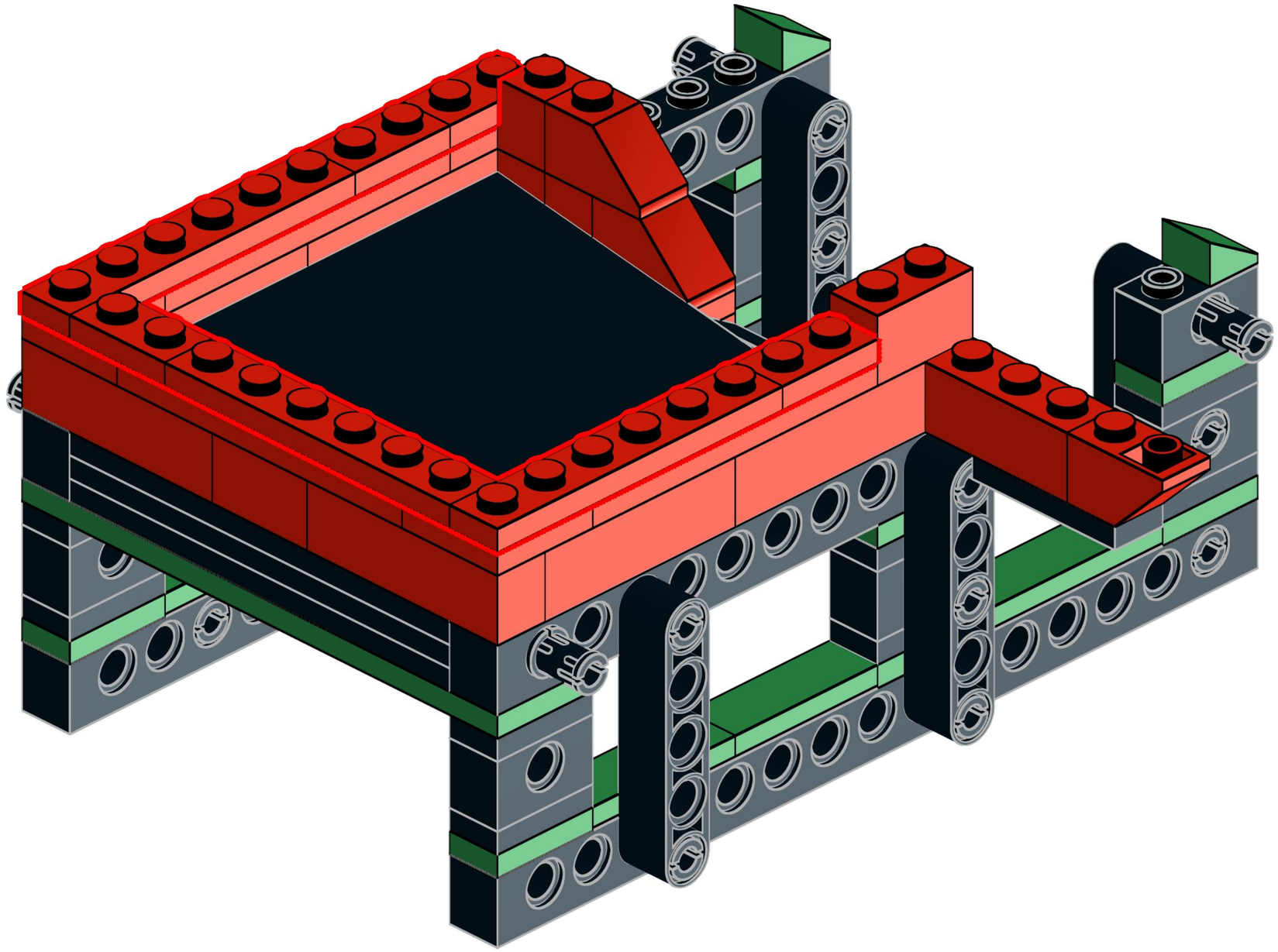

24

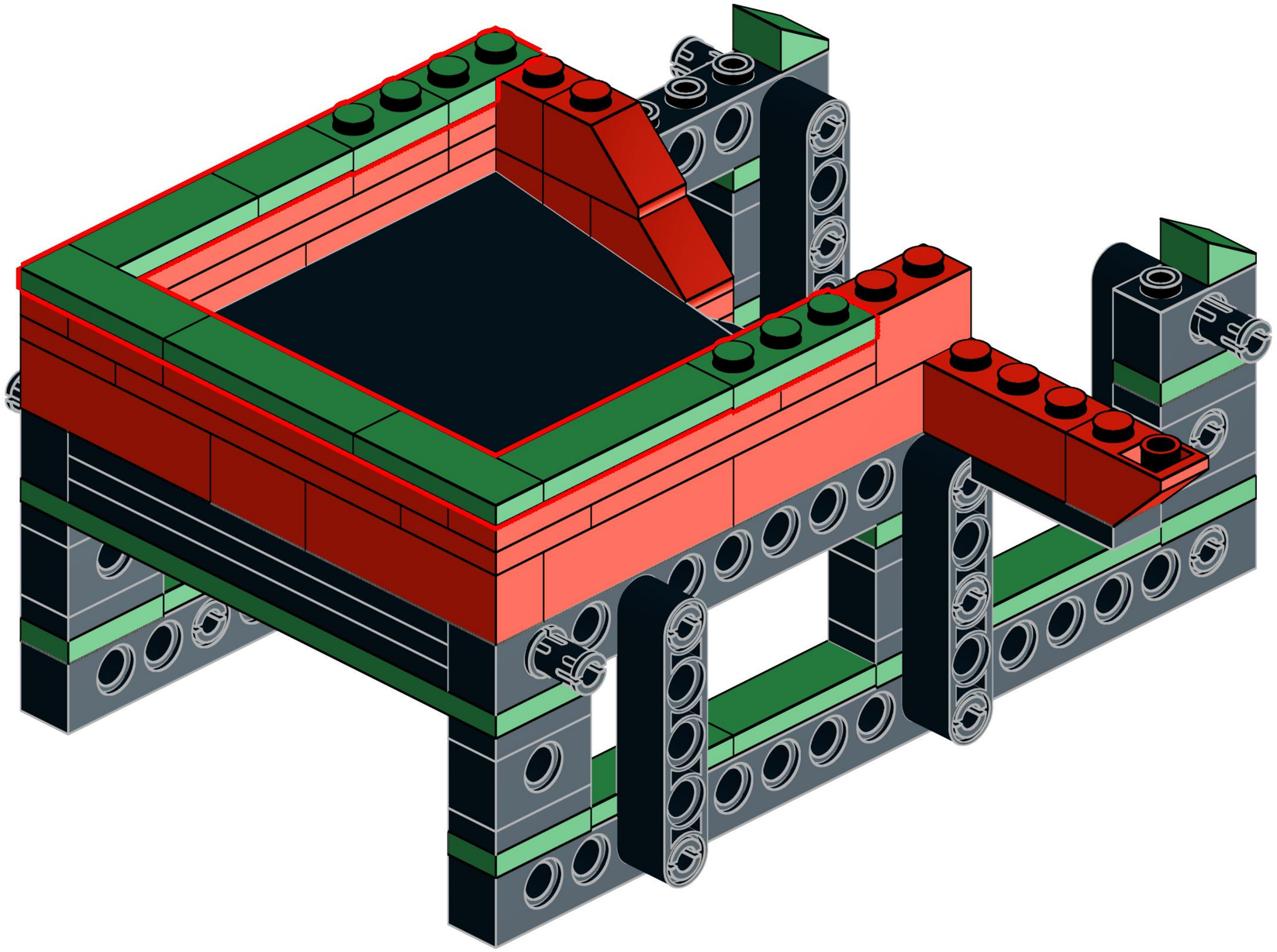

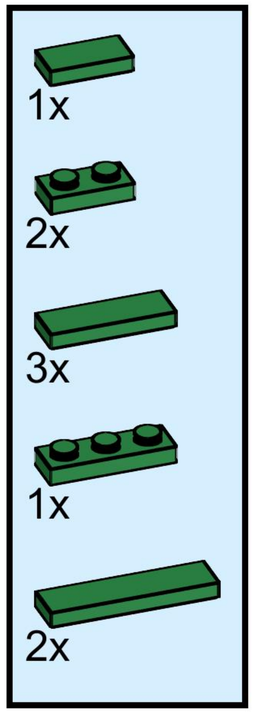

25

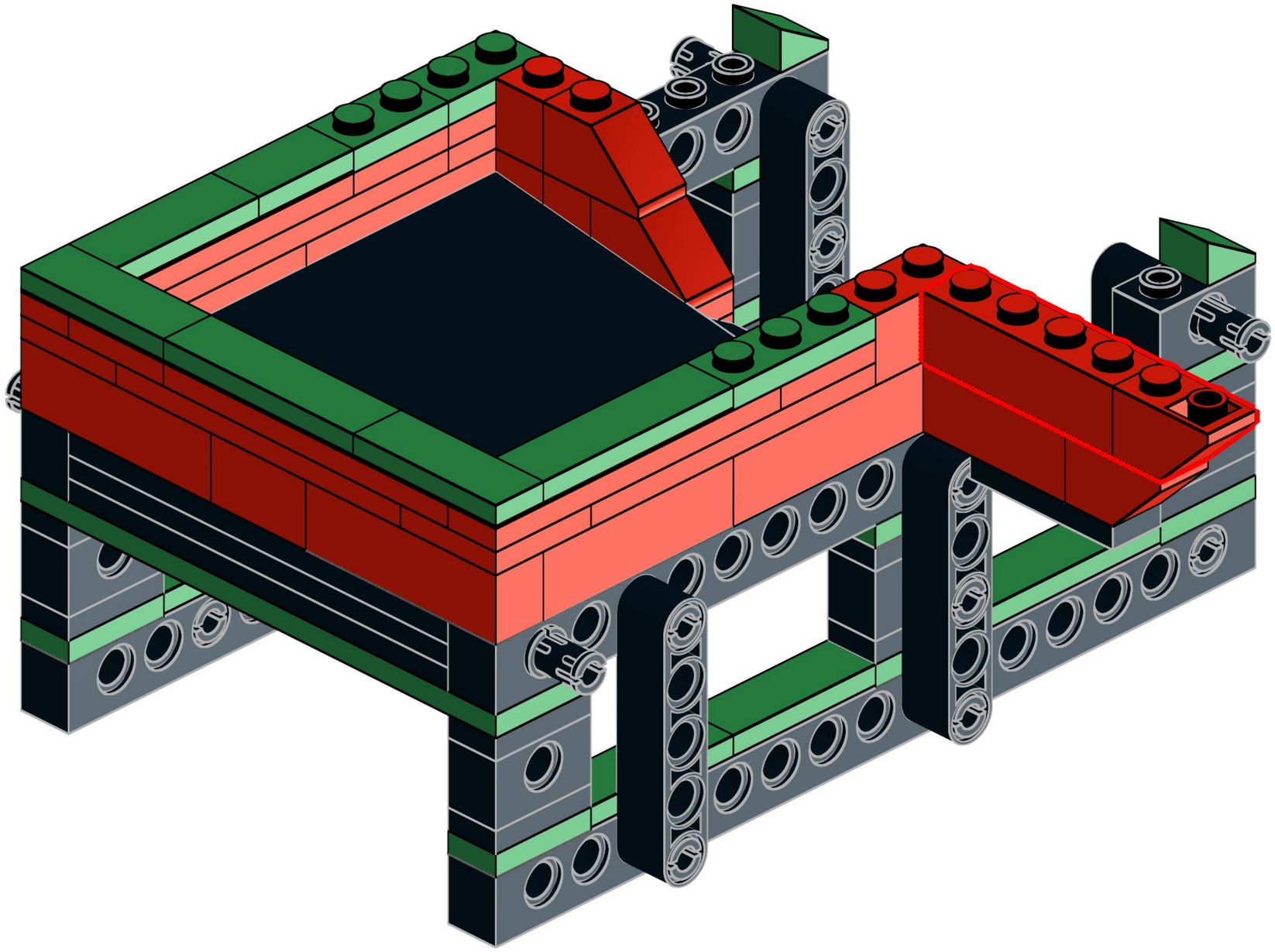

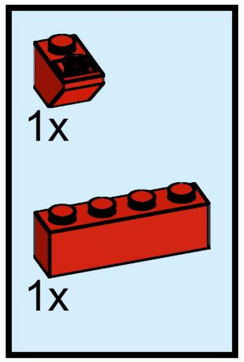

26

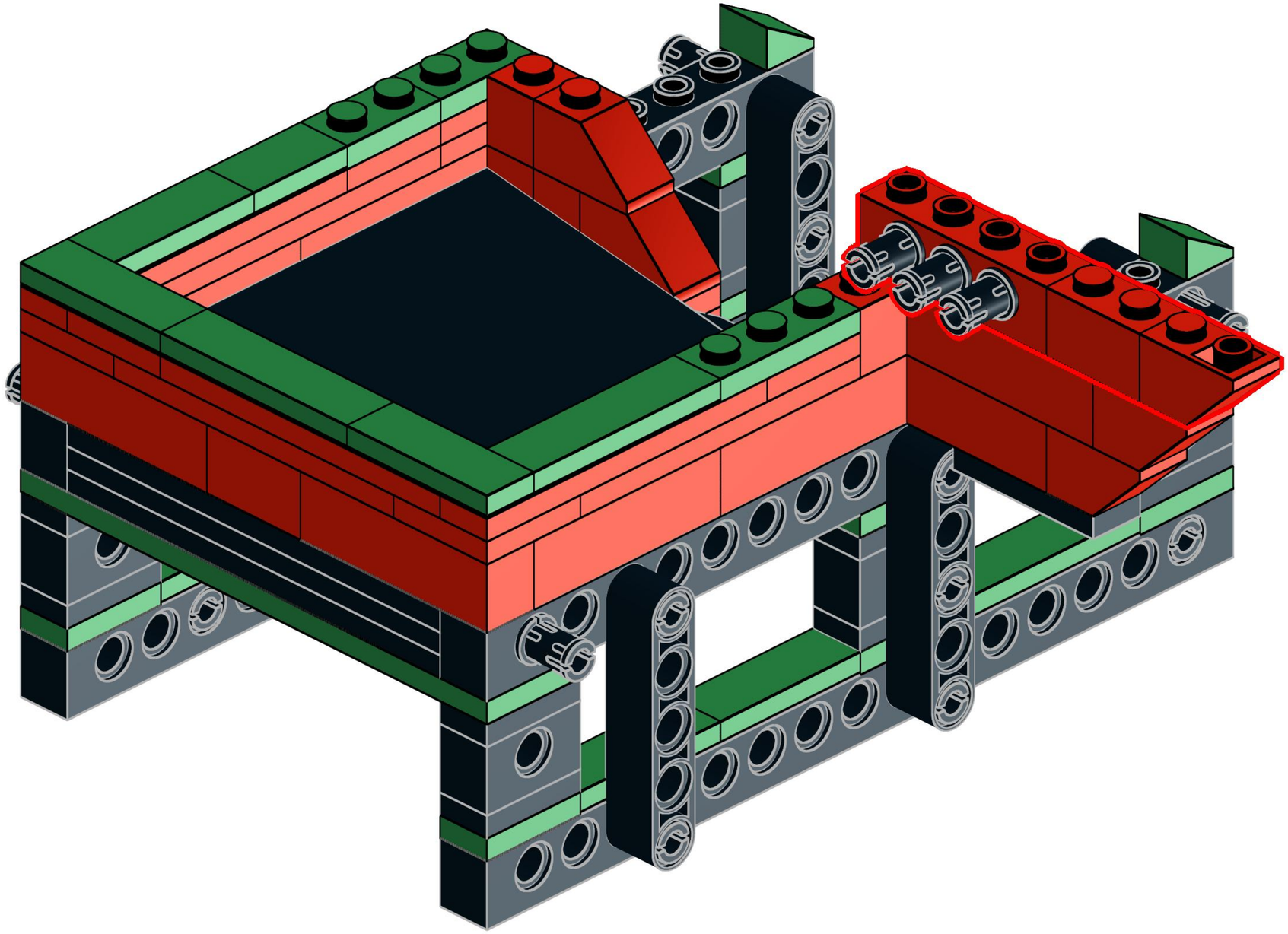

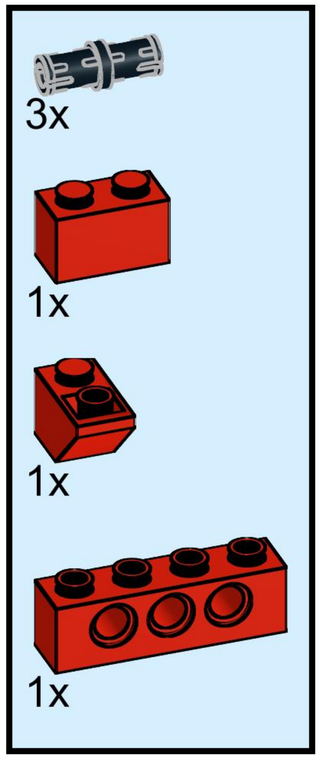

27

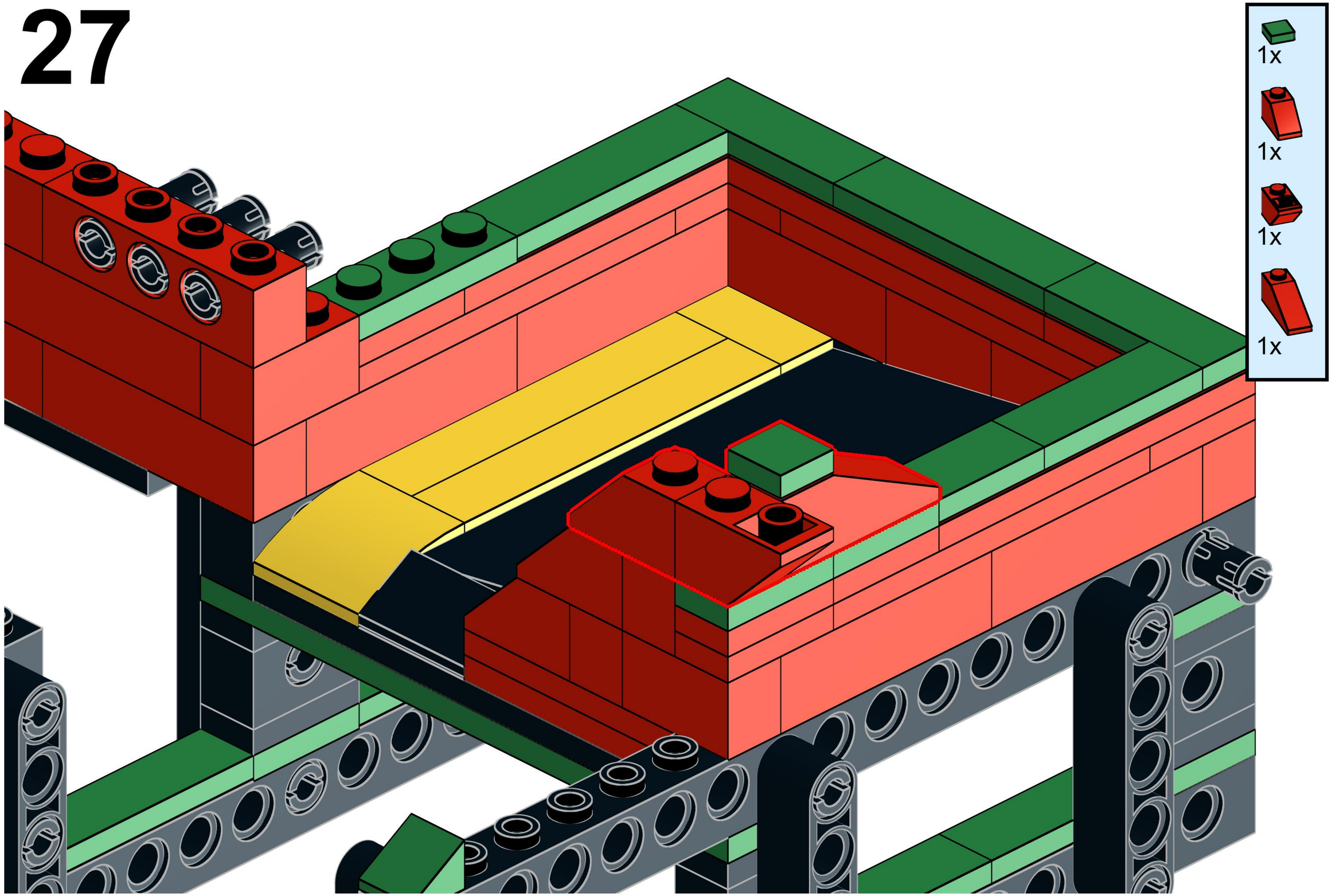

28

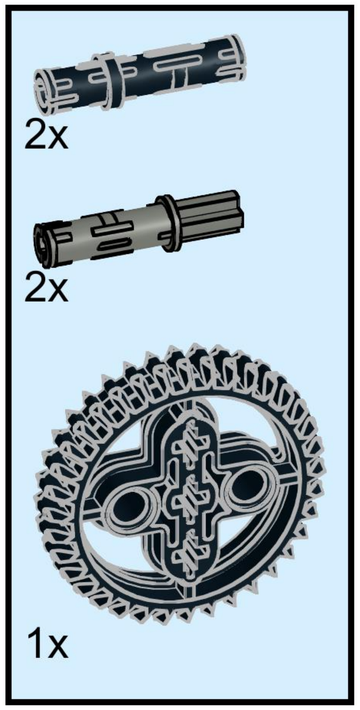

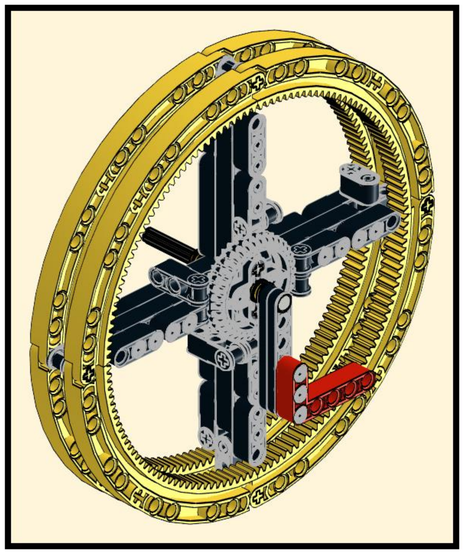

29

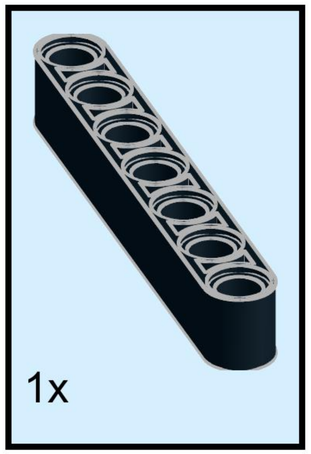

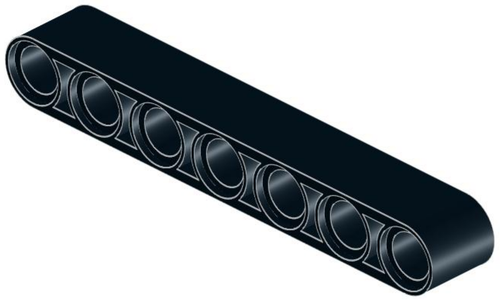

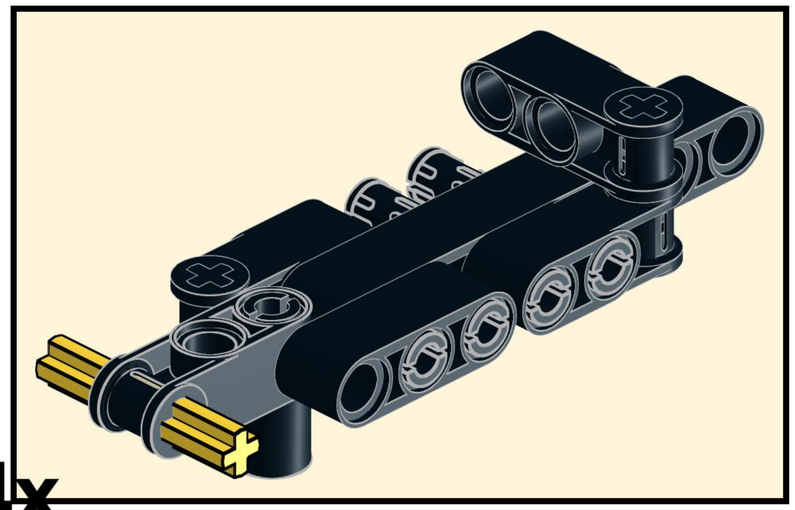

30

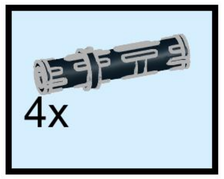

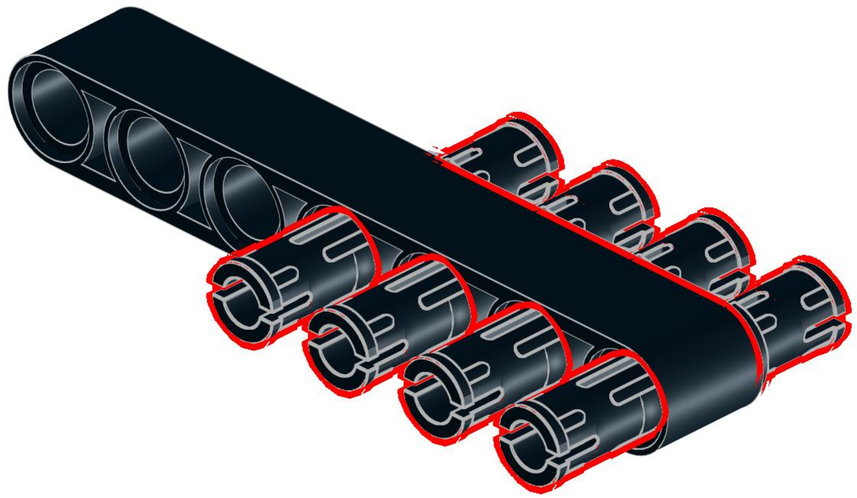

31

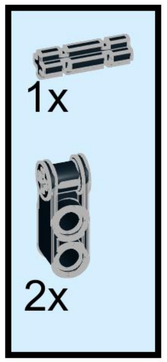

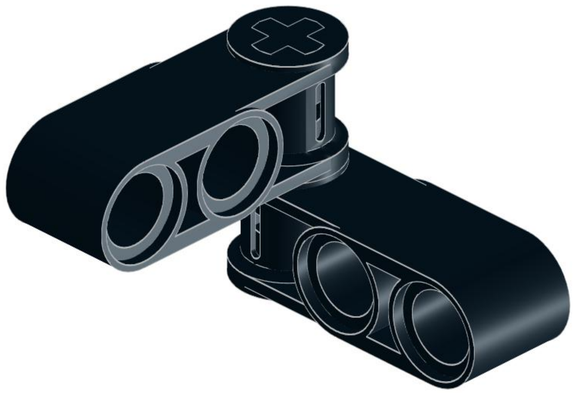

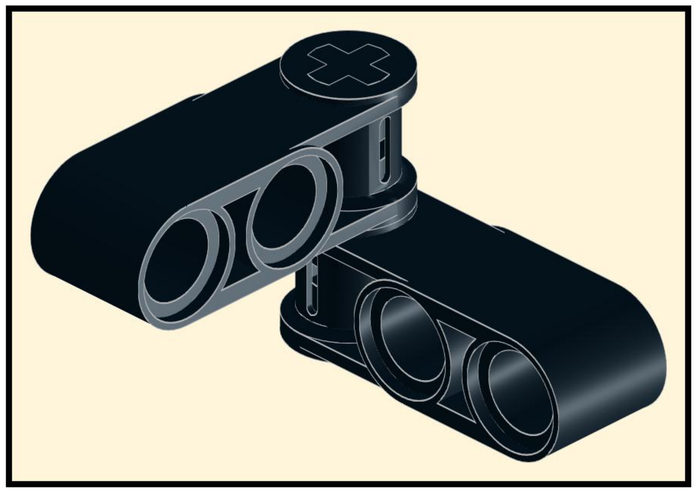

32

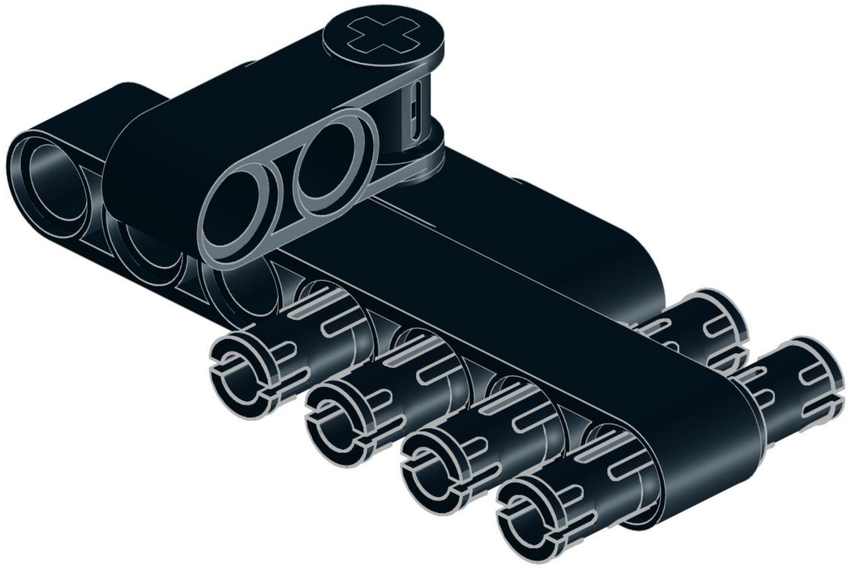

33

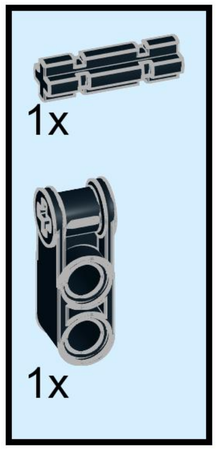

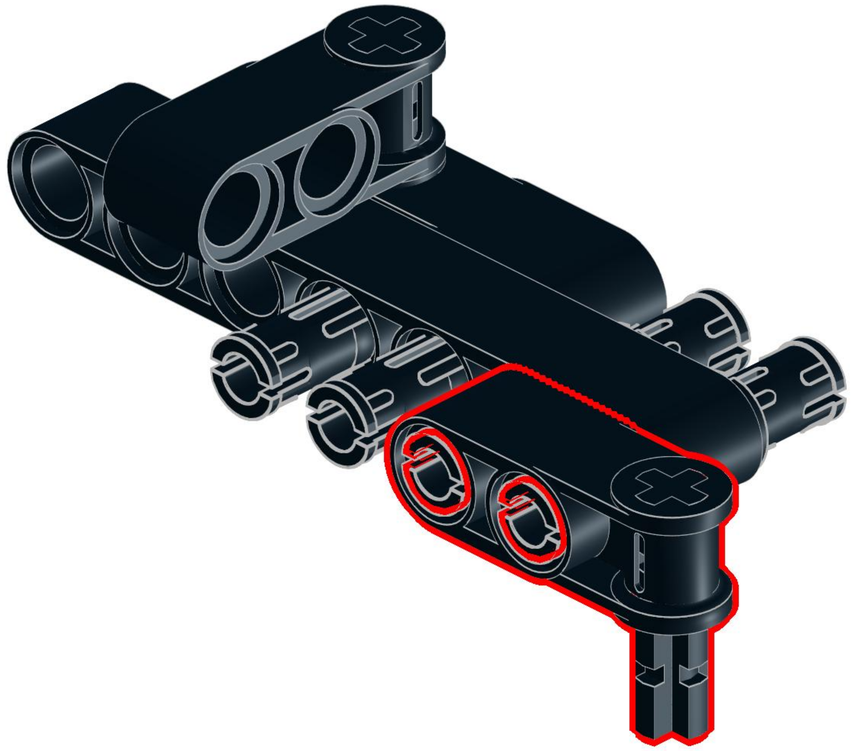

34

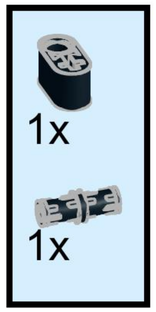

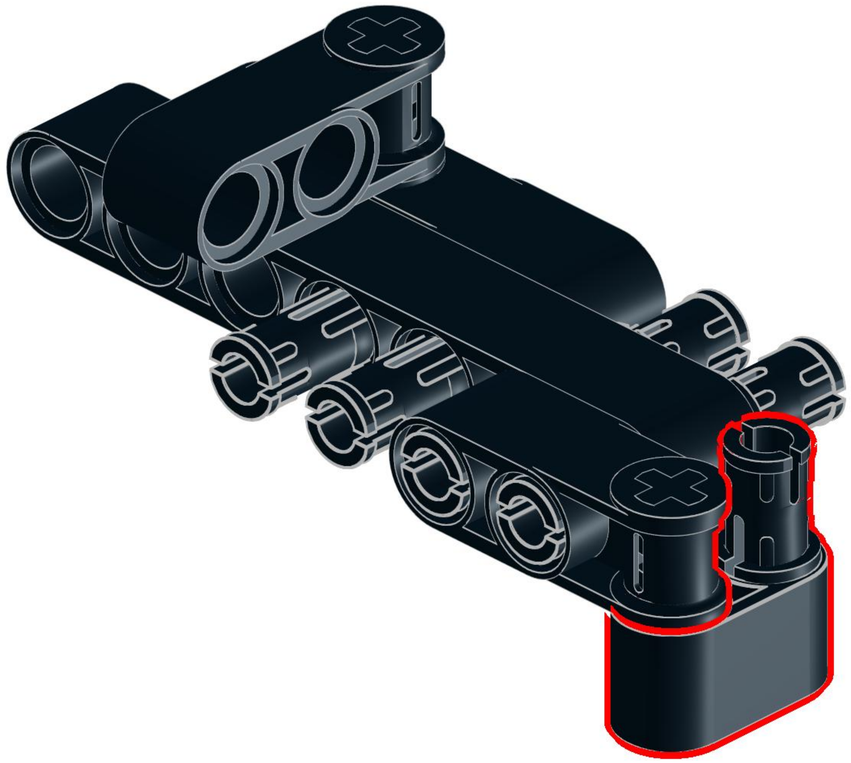

35

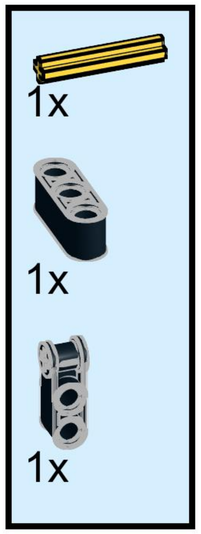

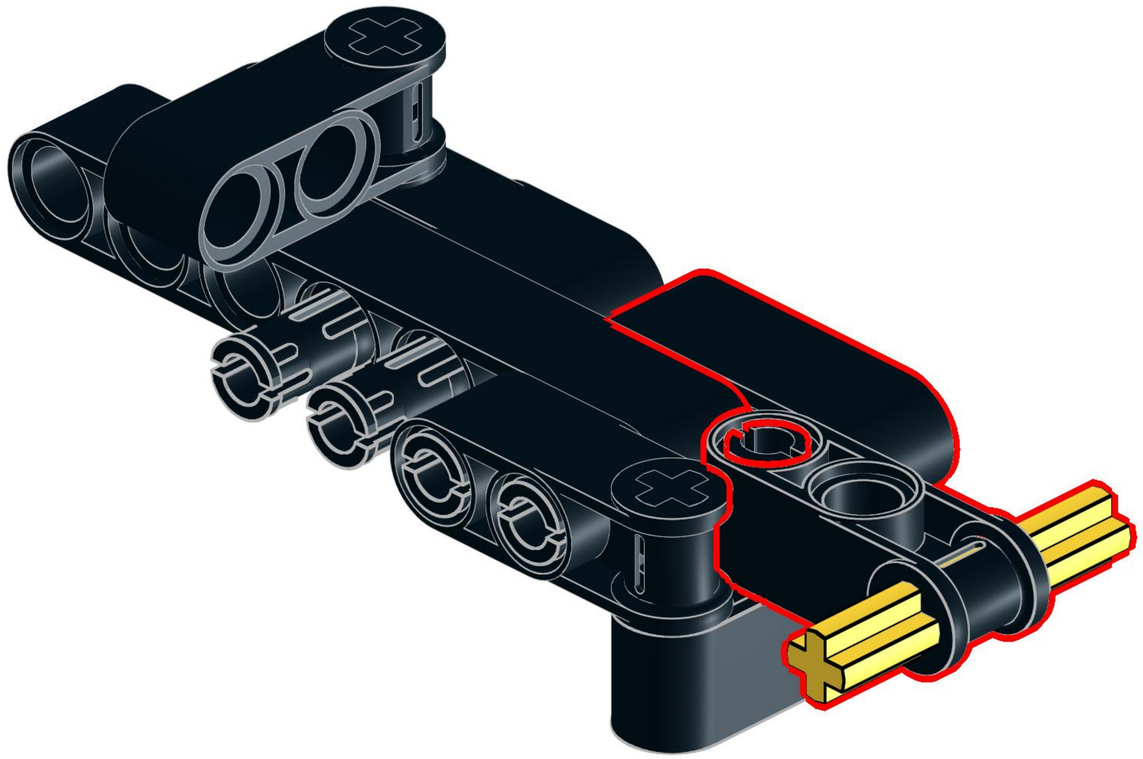

36

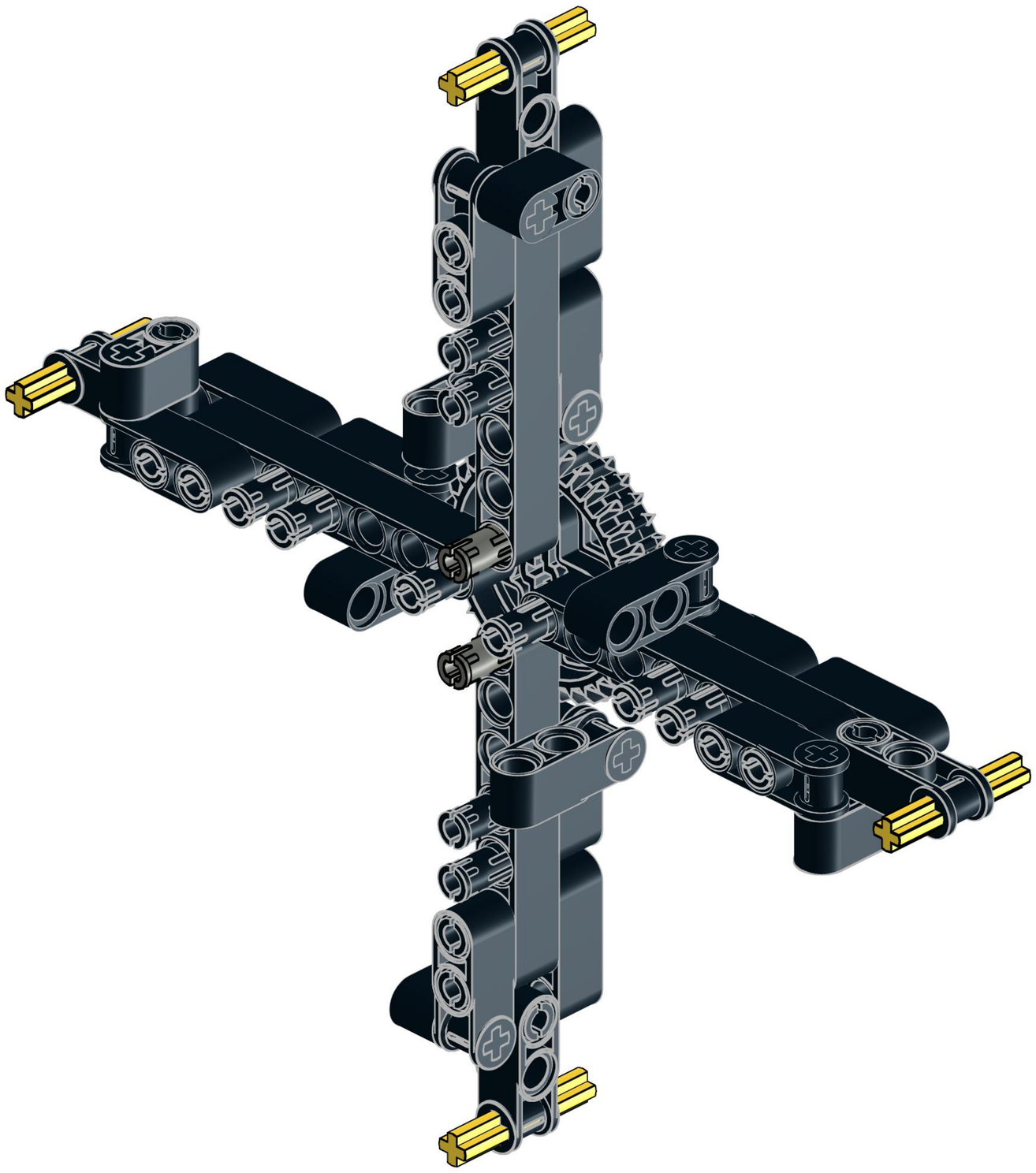

37

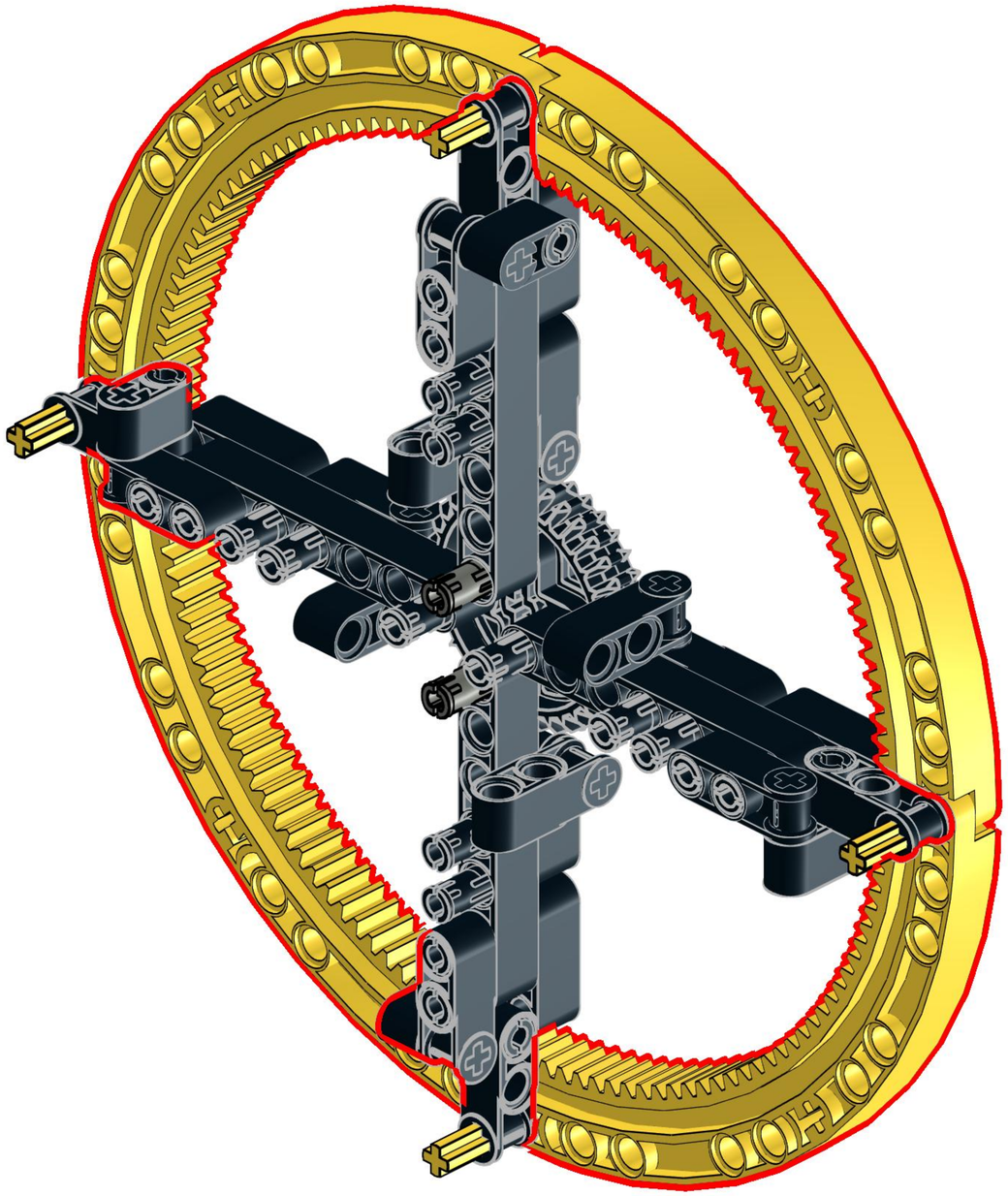

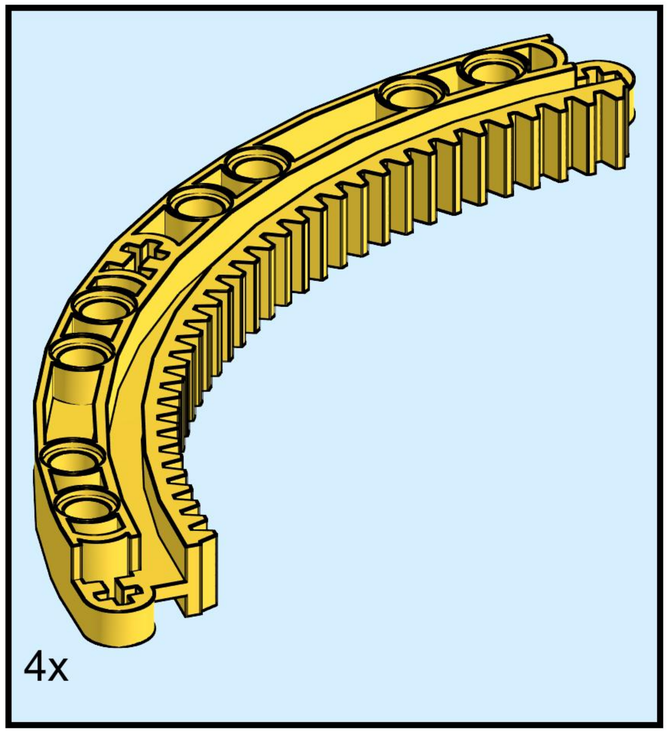

38

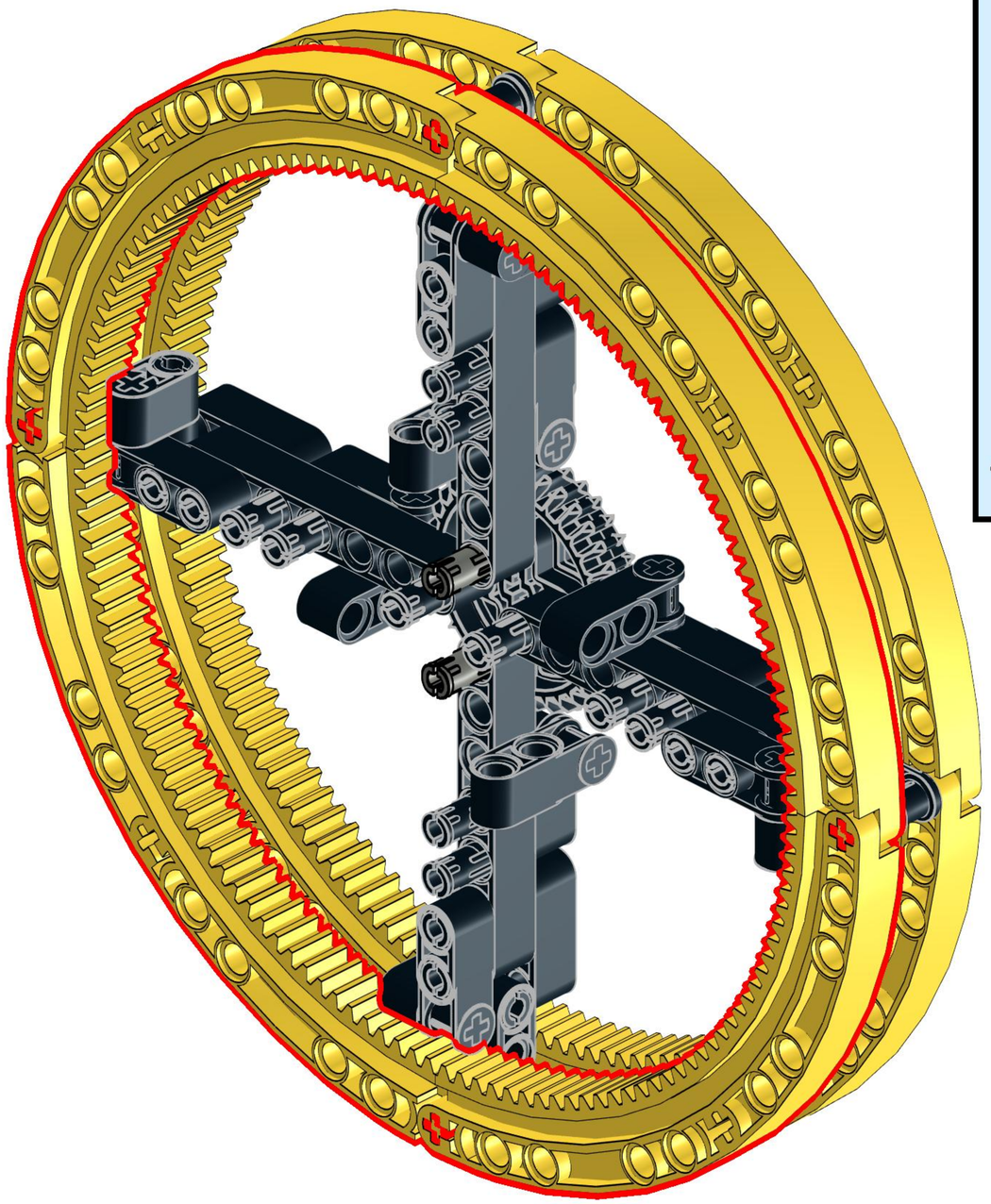

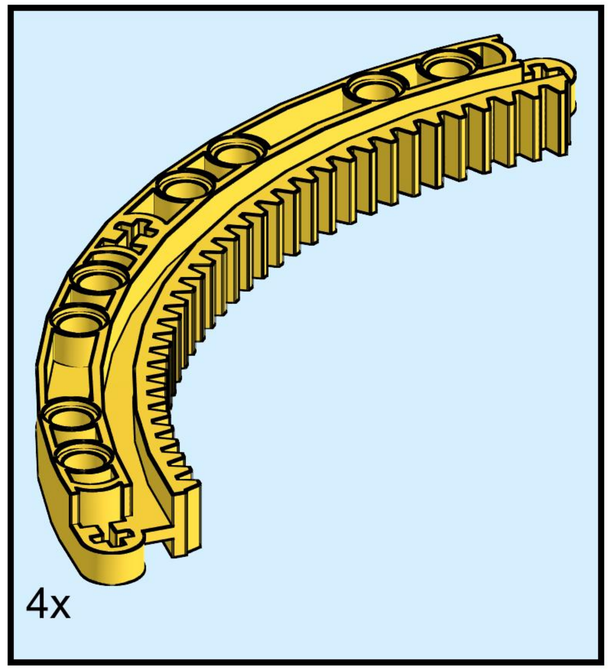

39

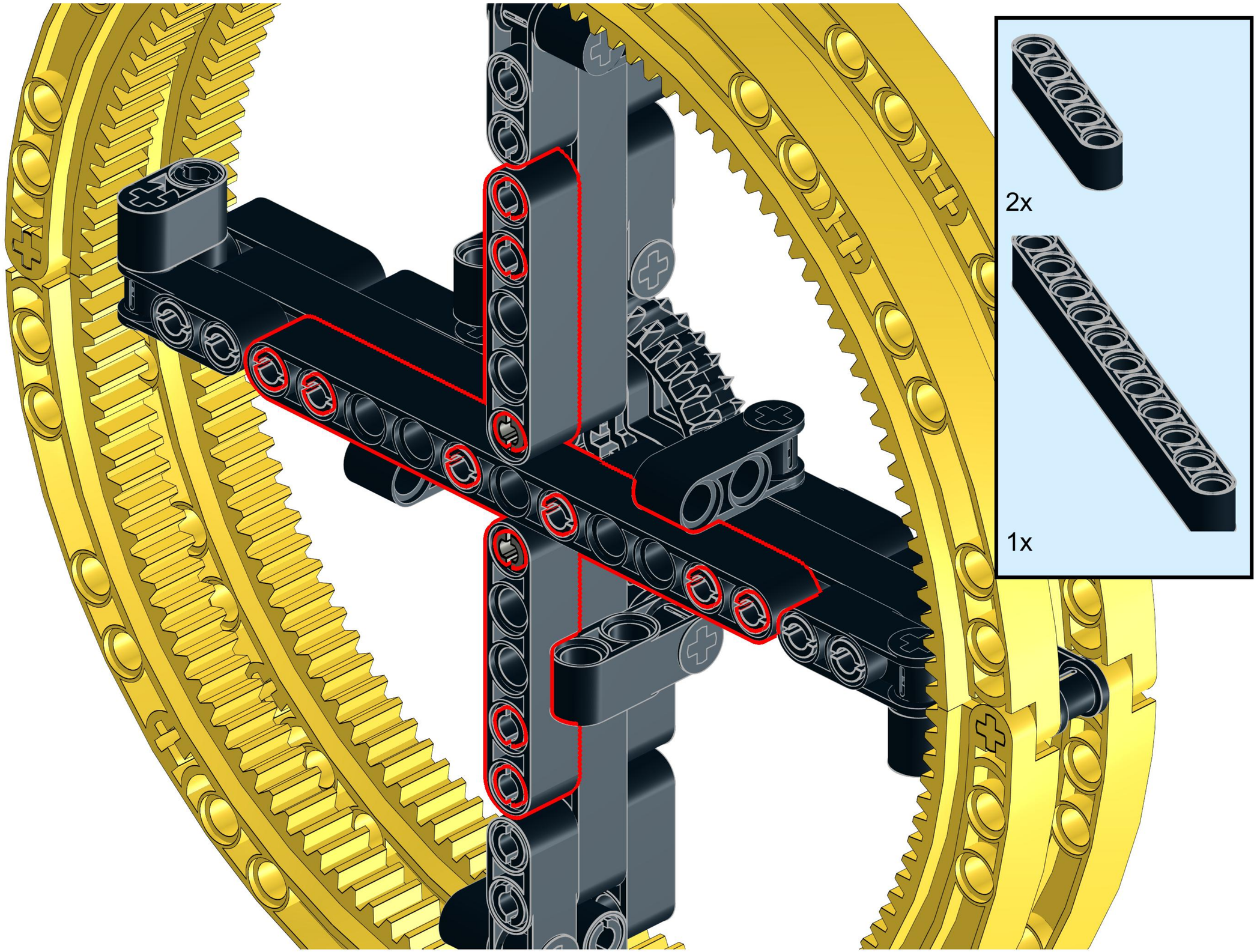

40

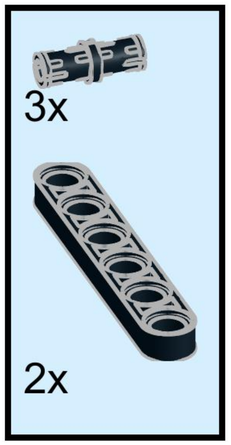

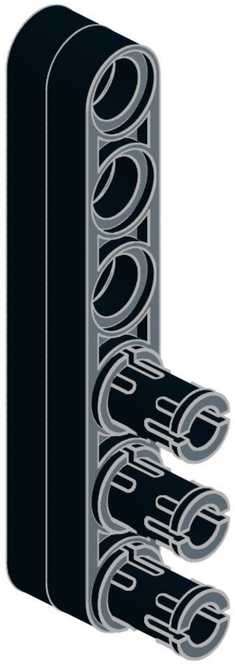

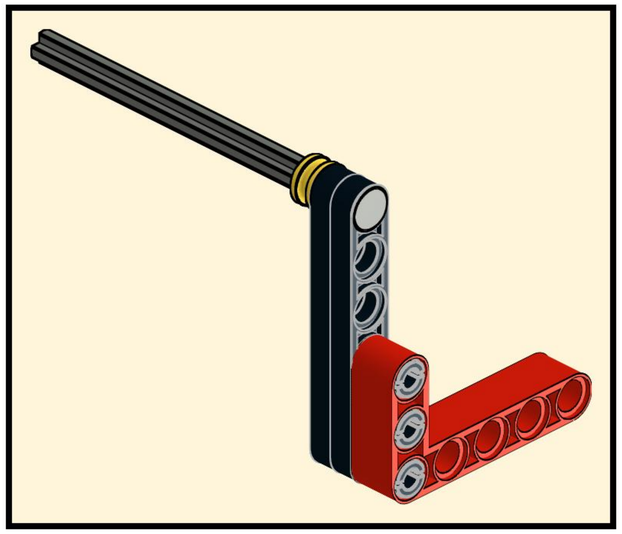

41

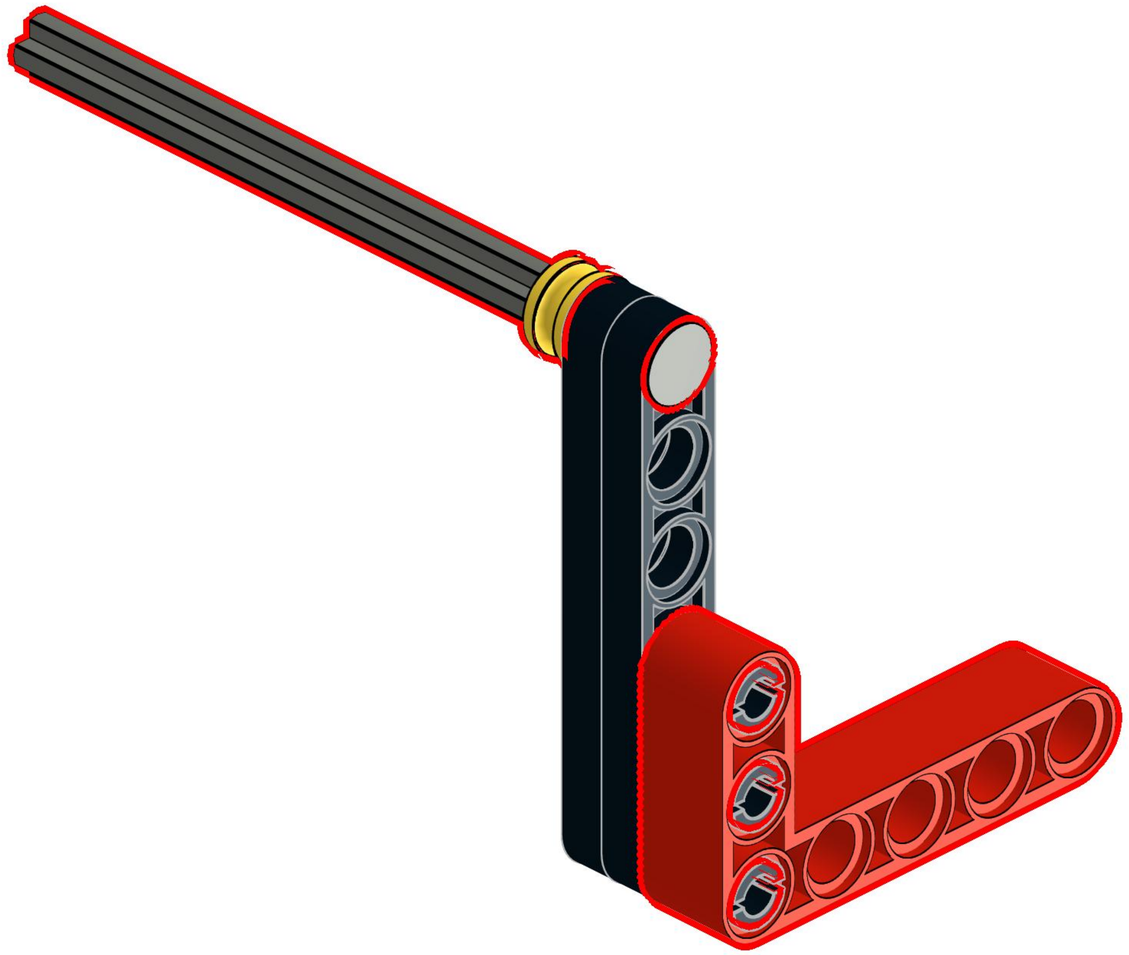

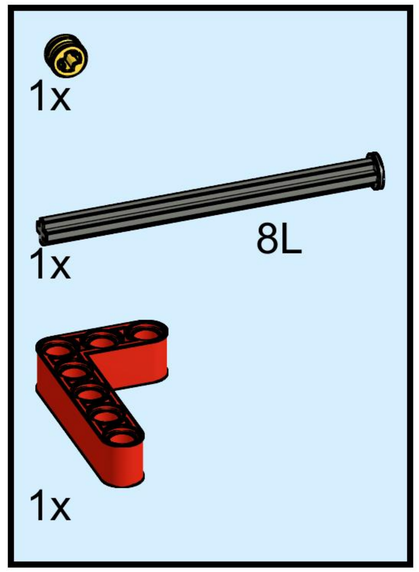

42

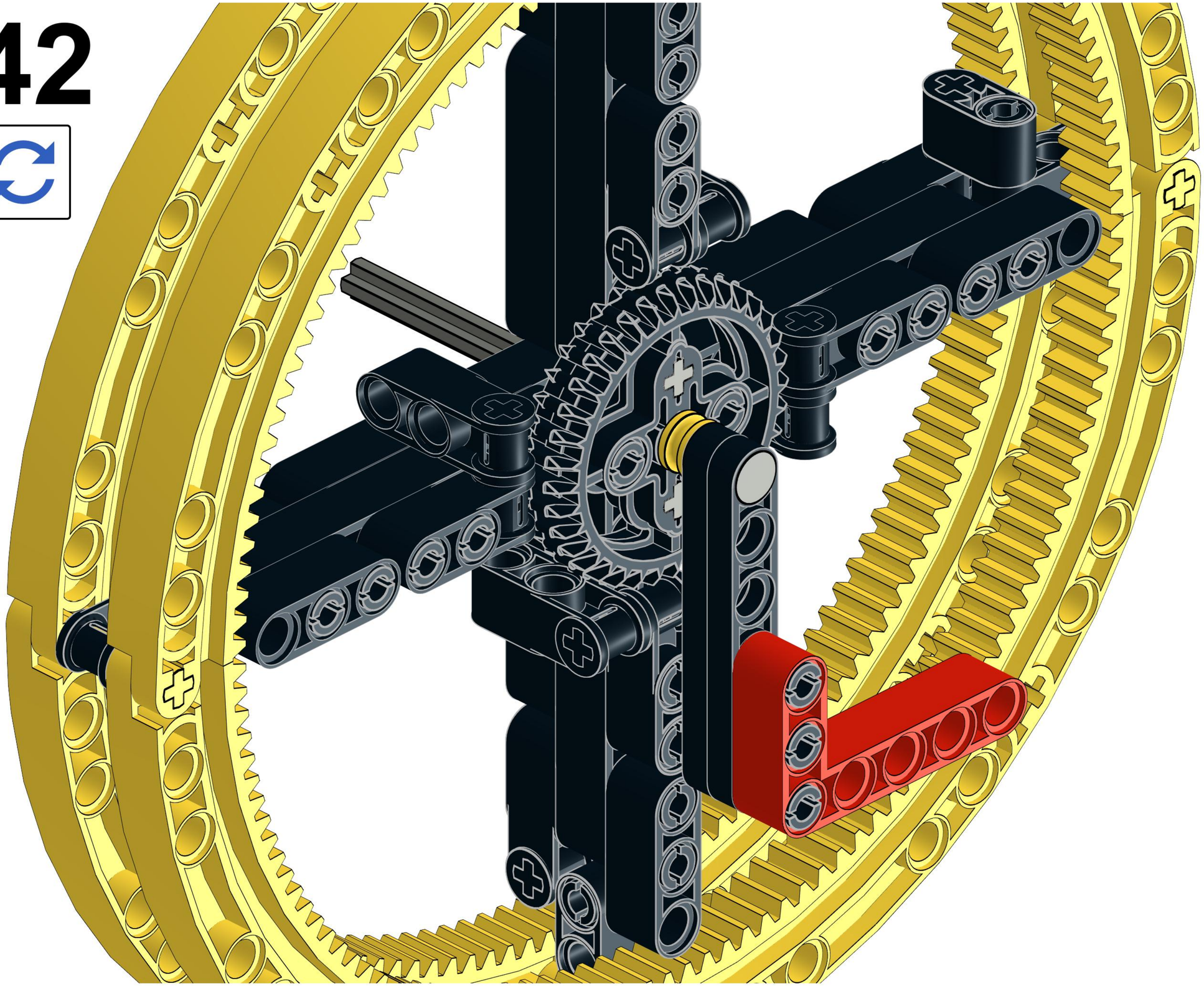

43

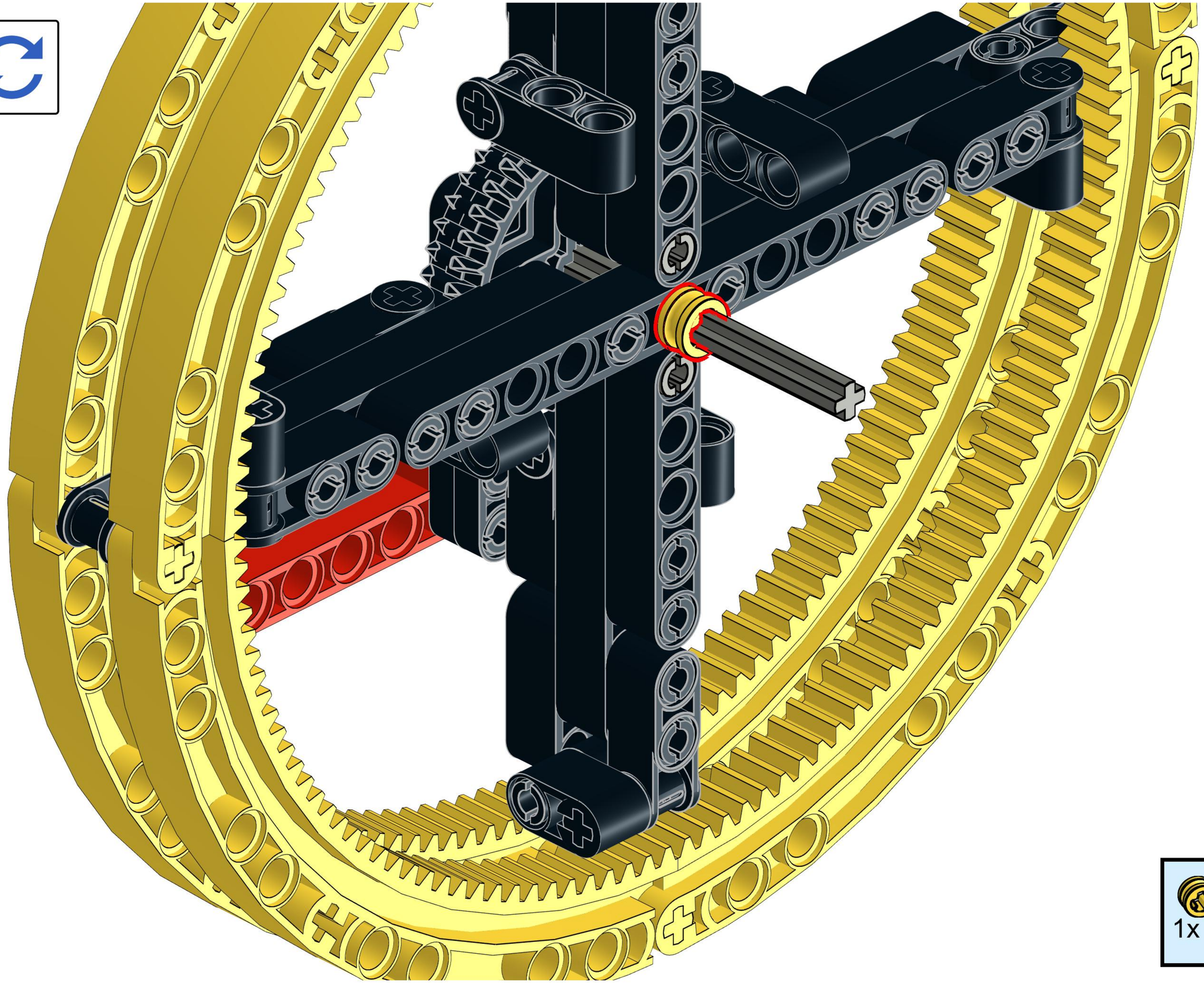

44

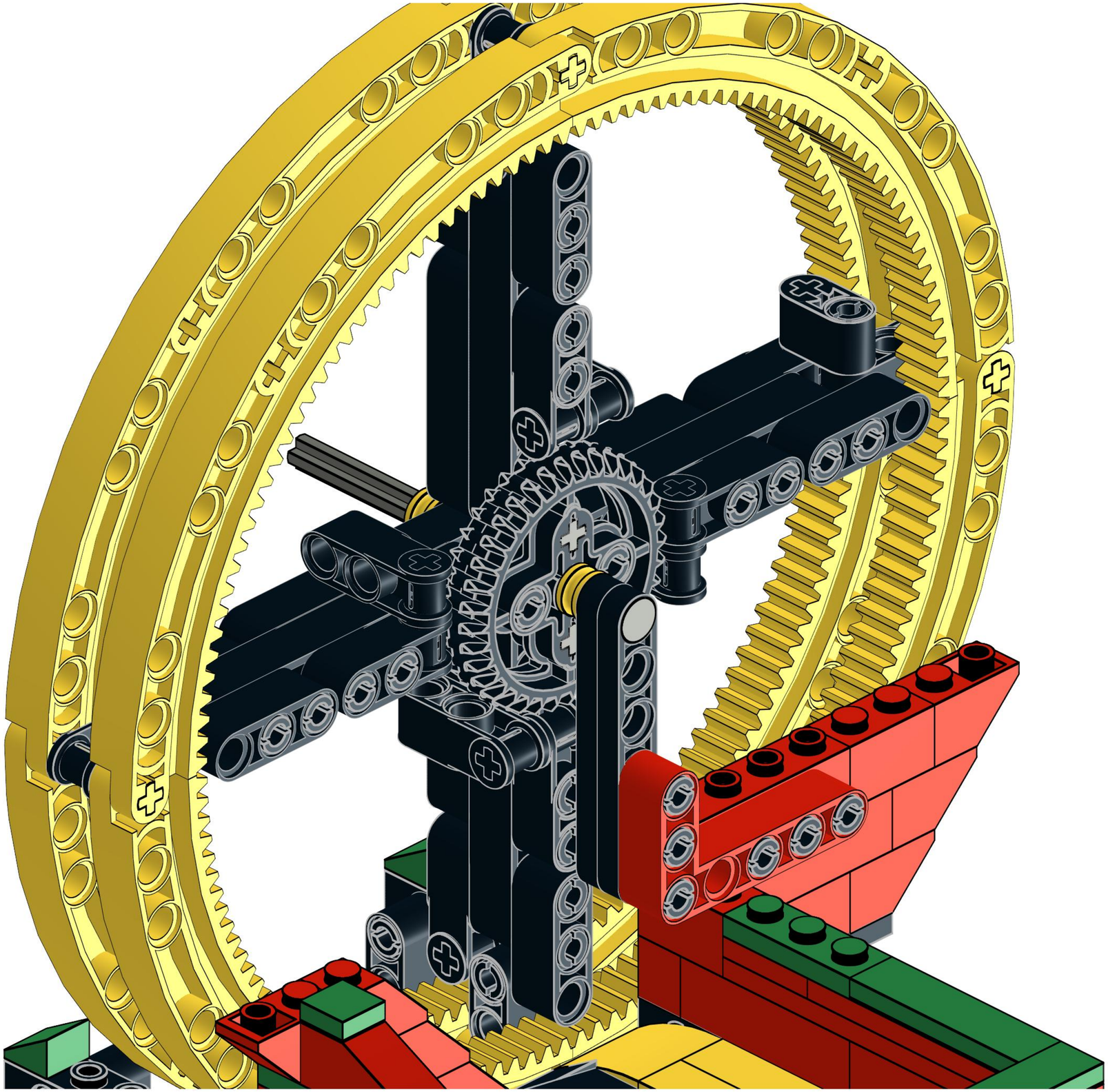

45

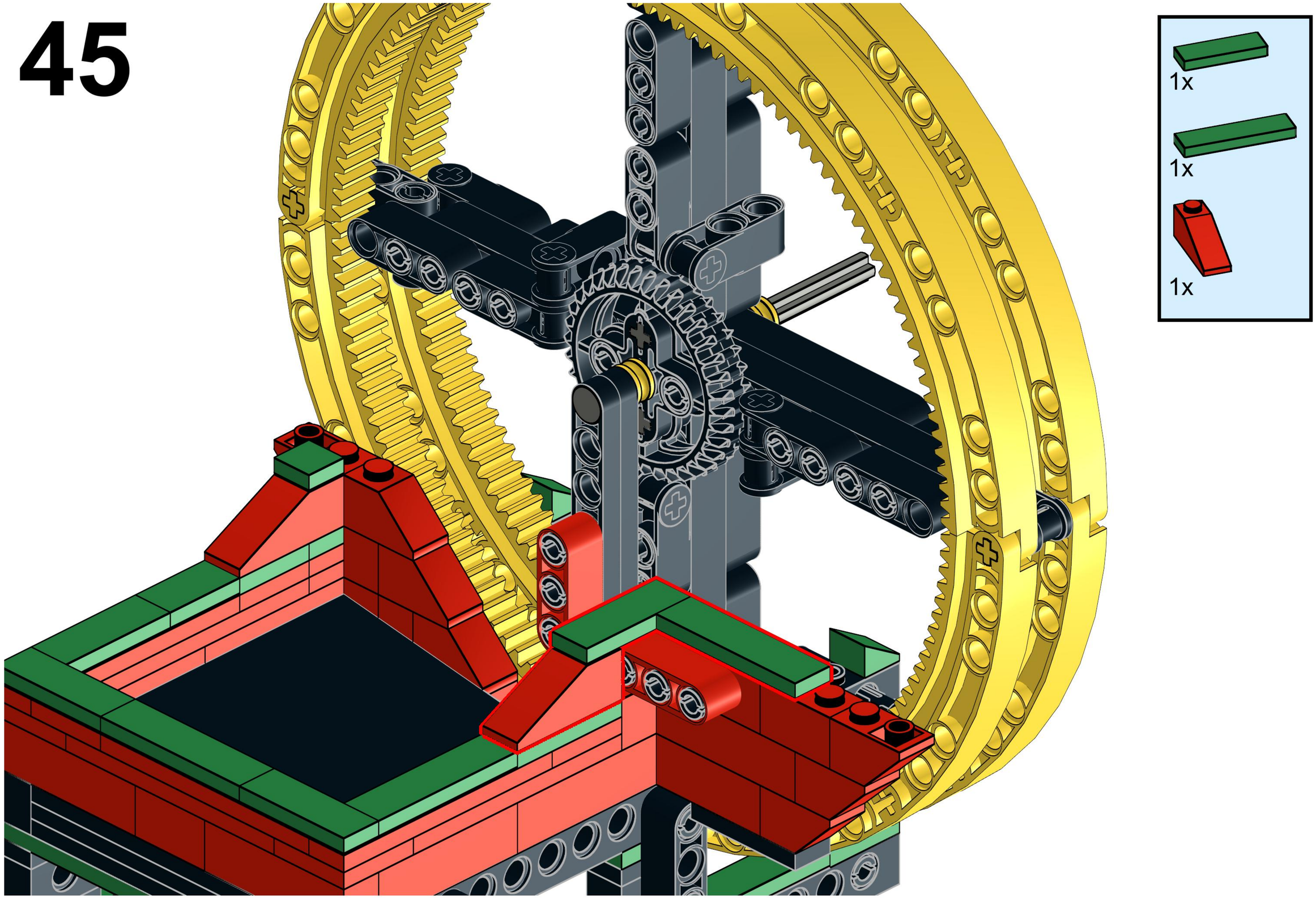

46

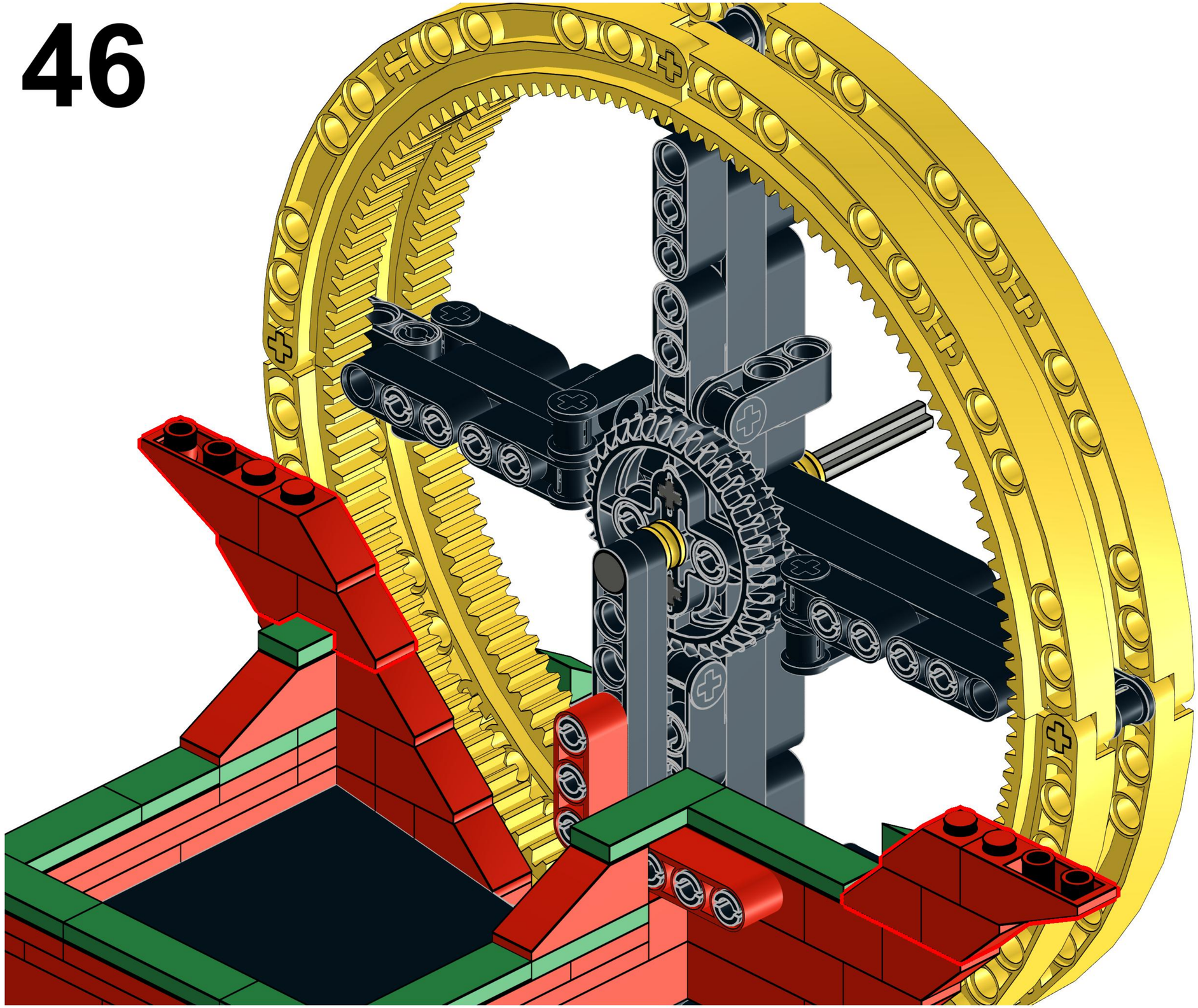

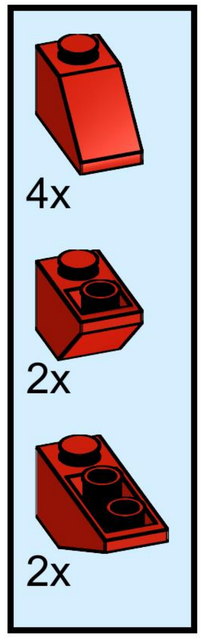

47

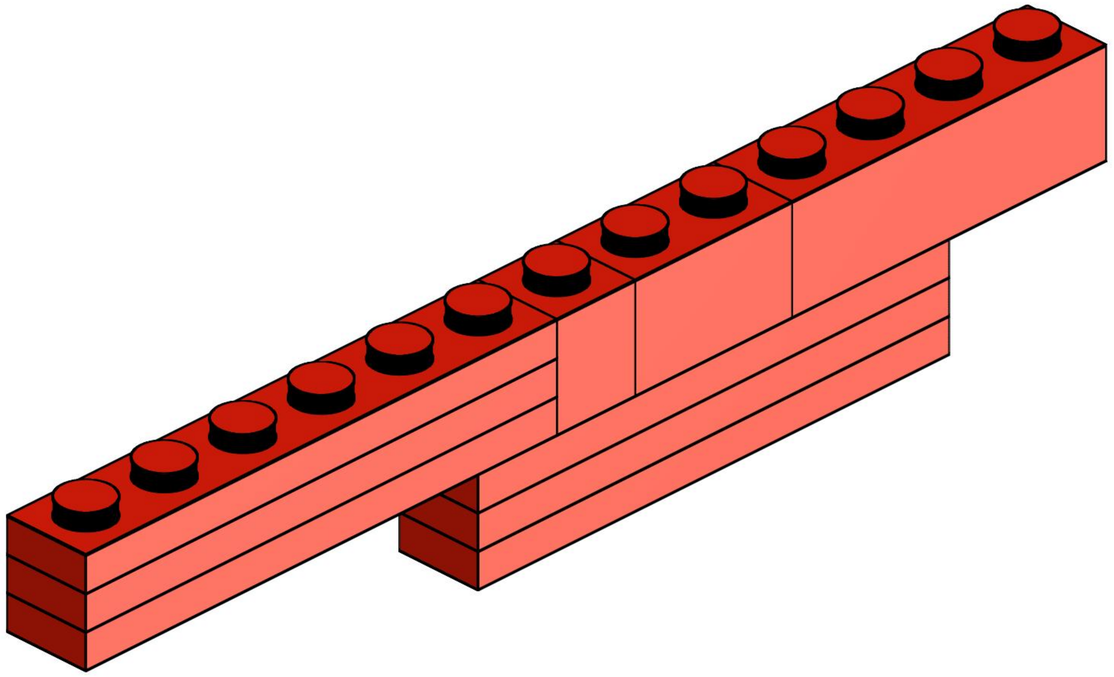

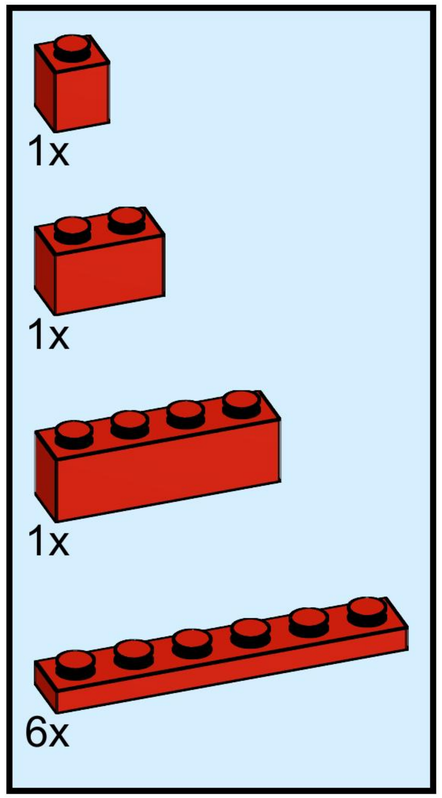

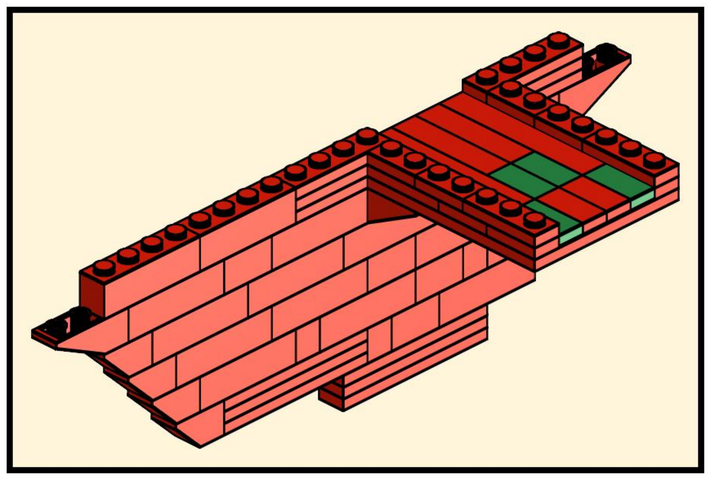

48

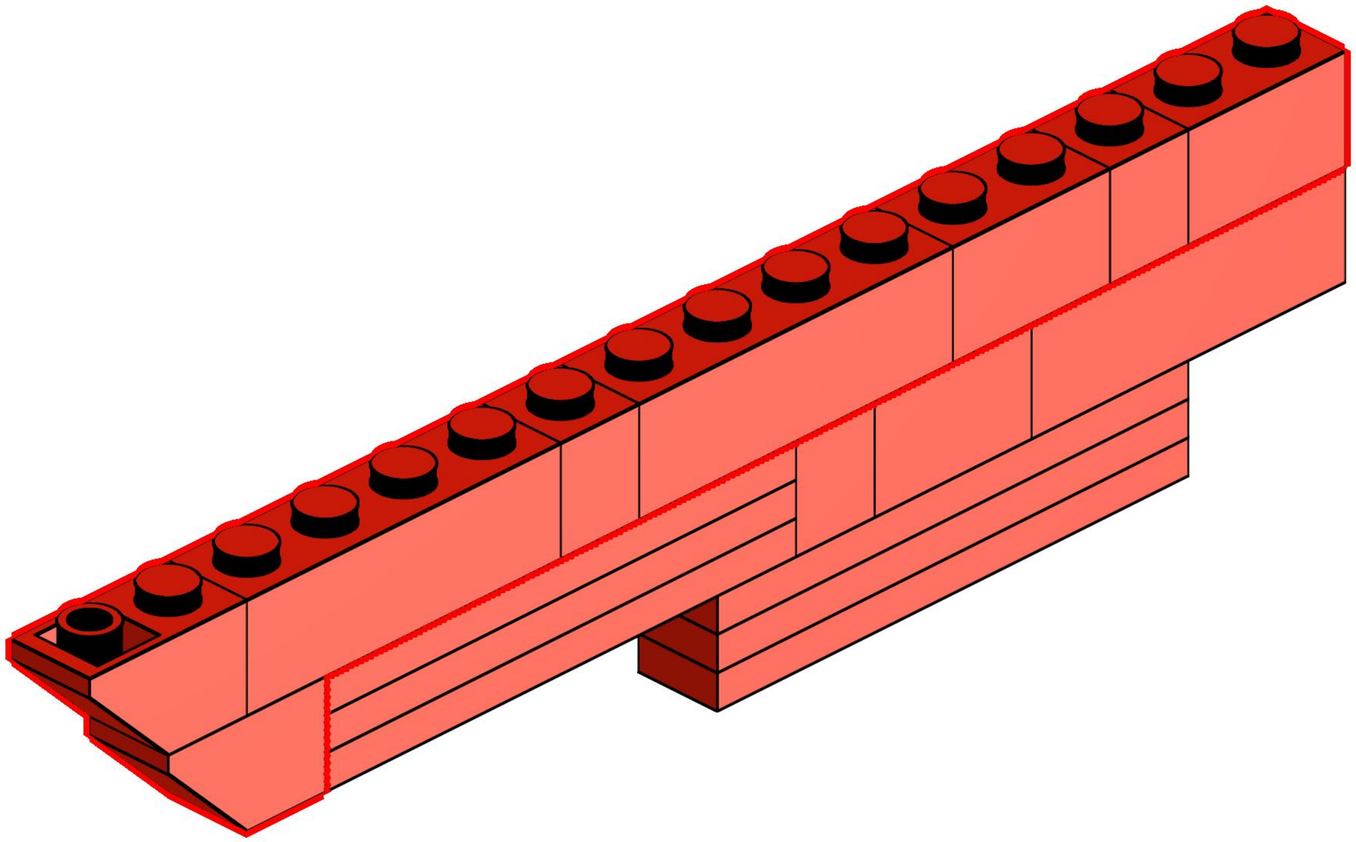

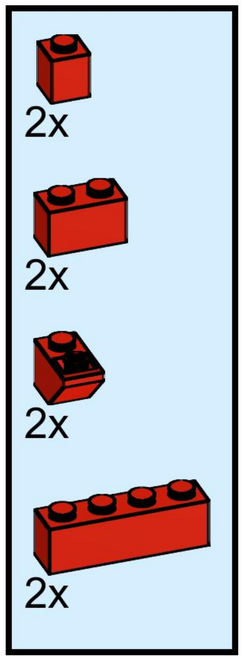

49

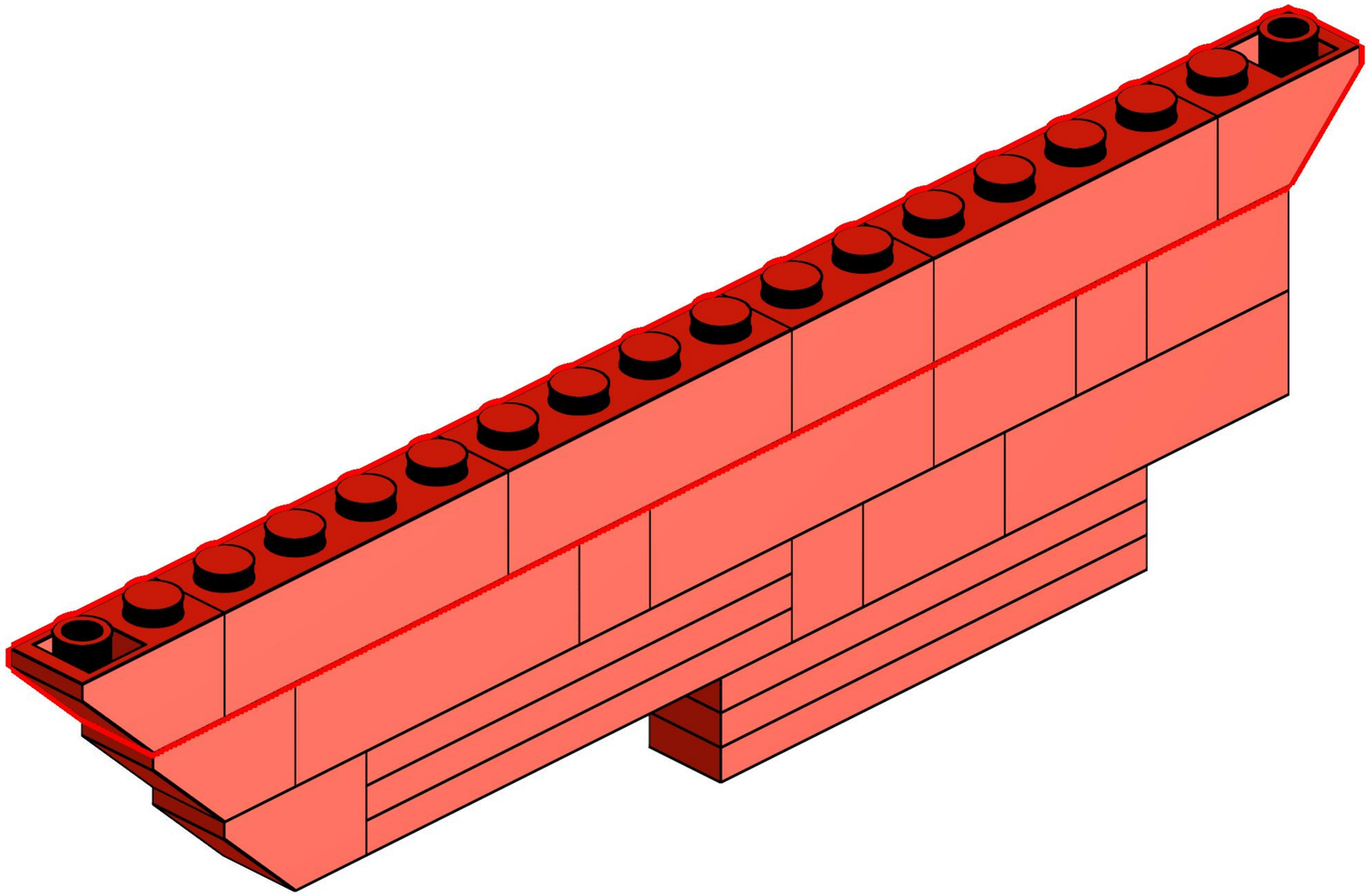

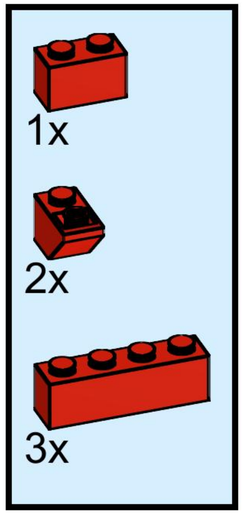

50

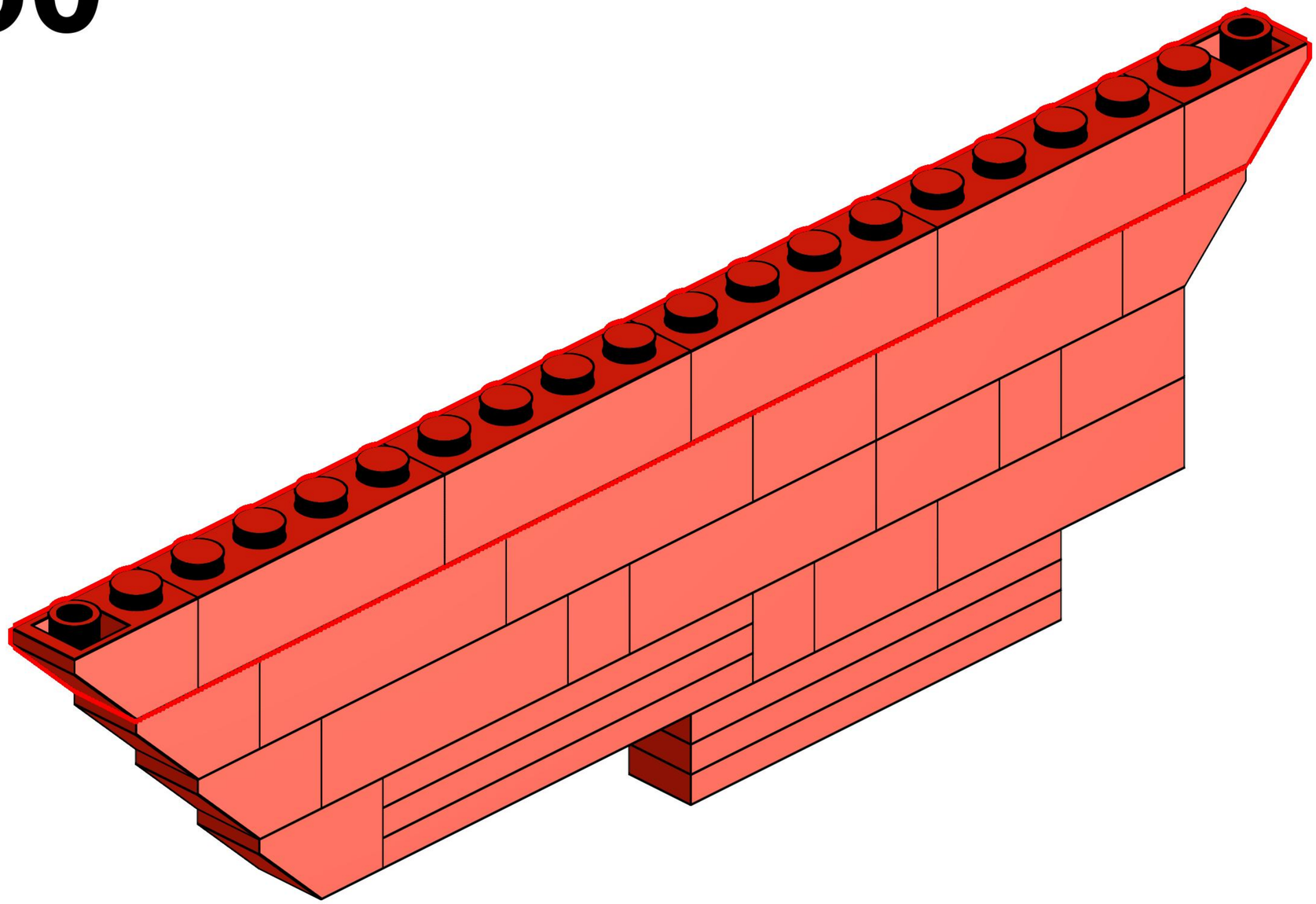

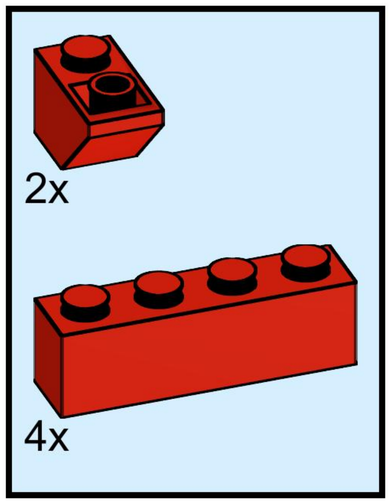

51

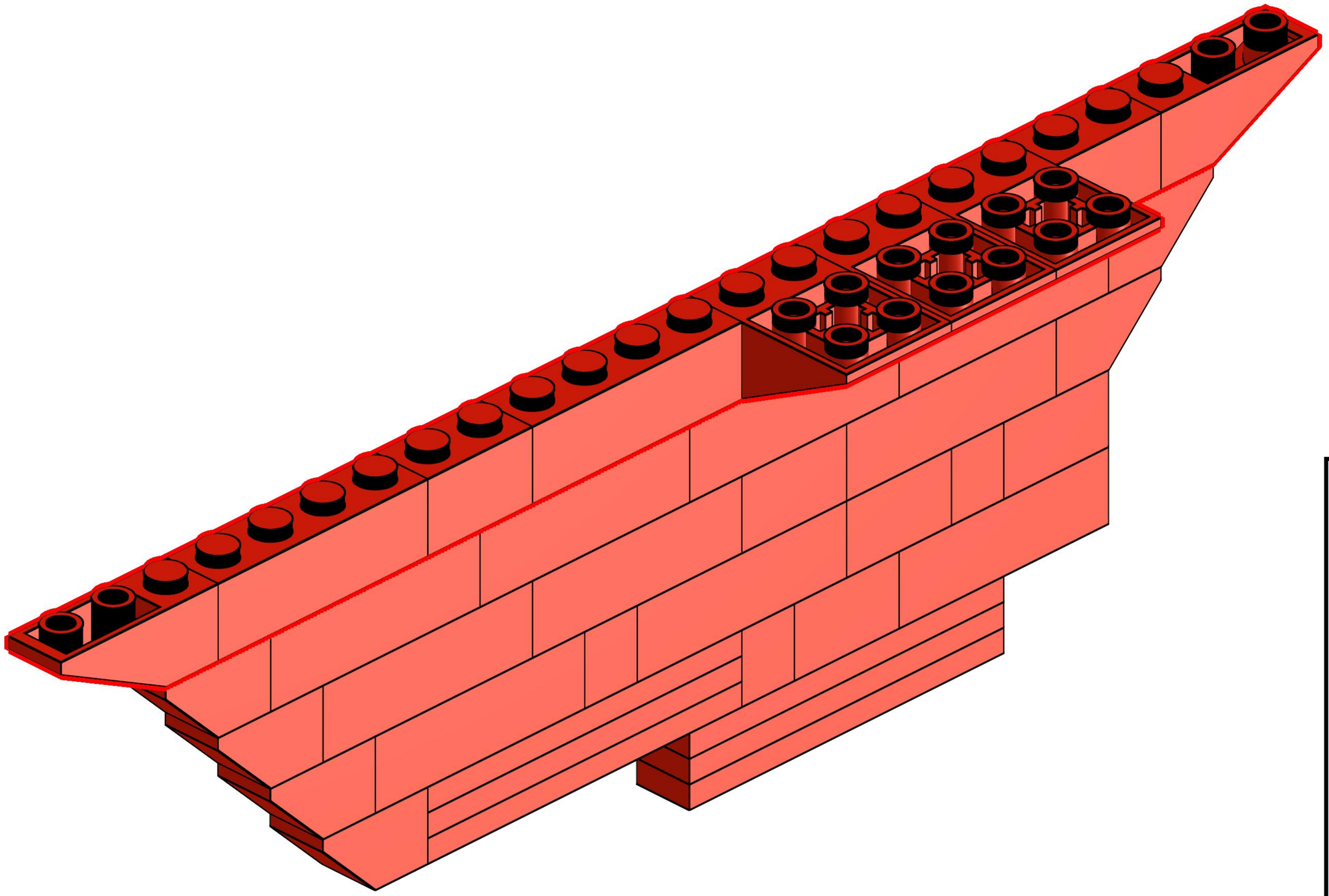

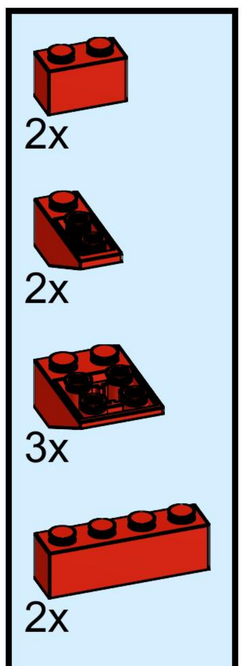

52

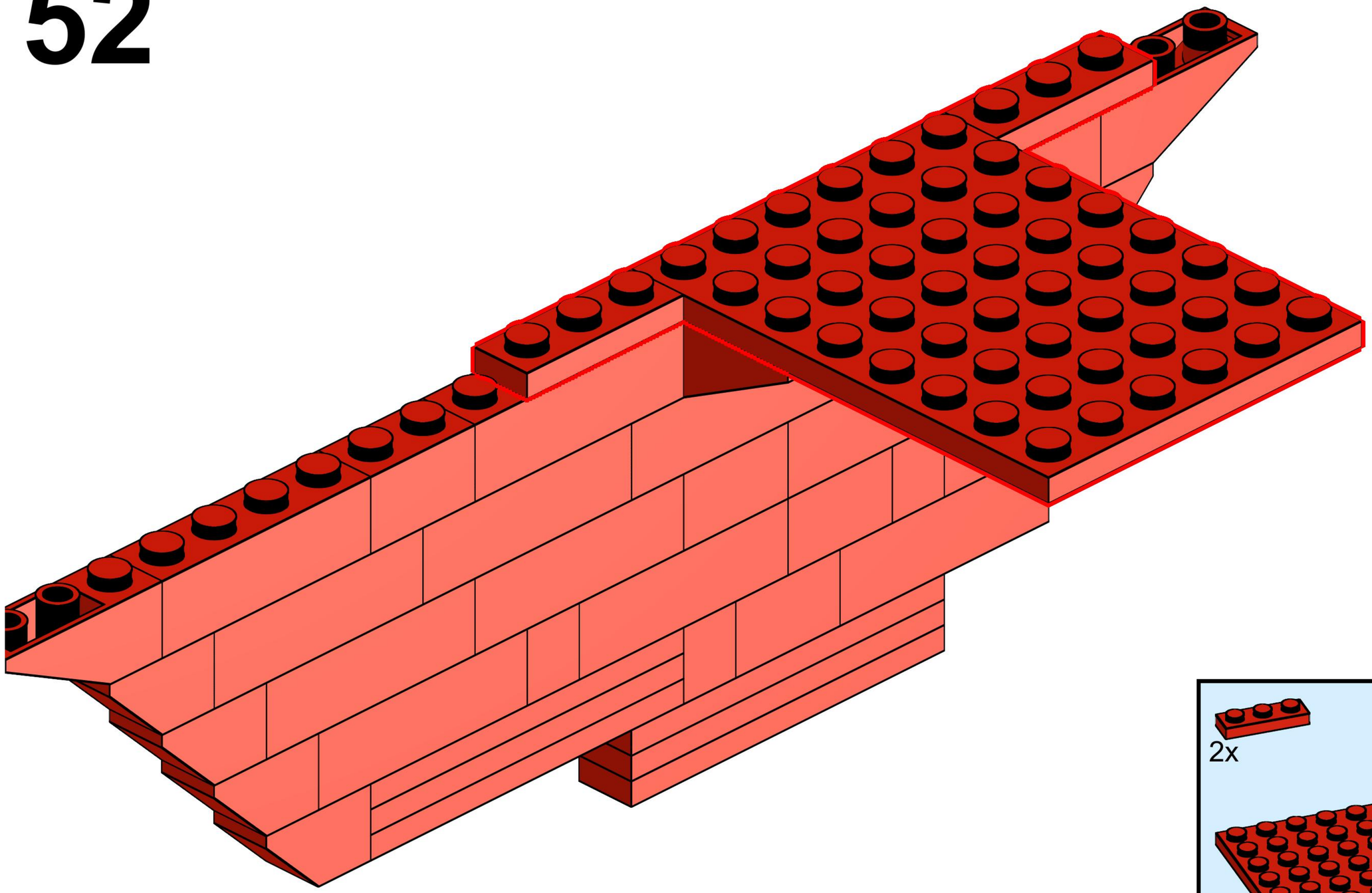

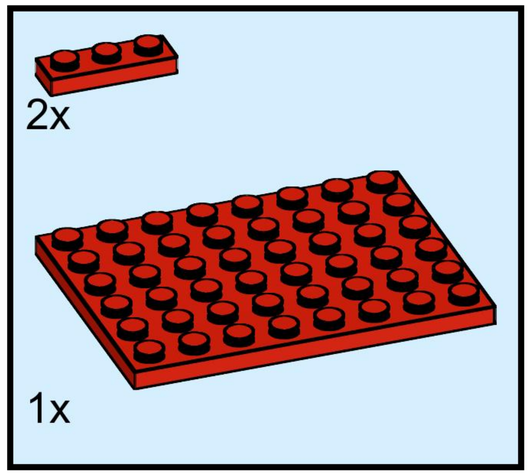

53

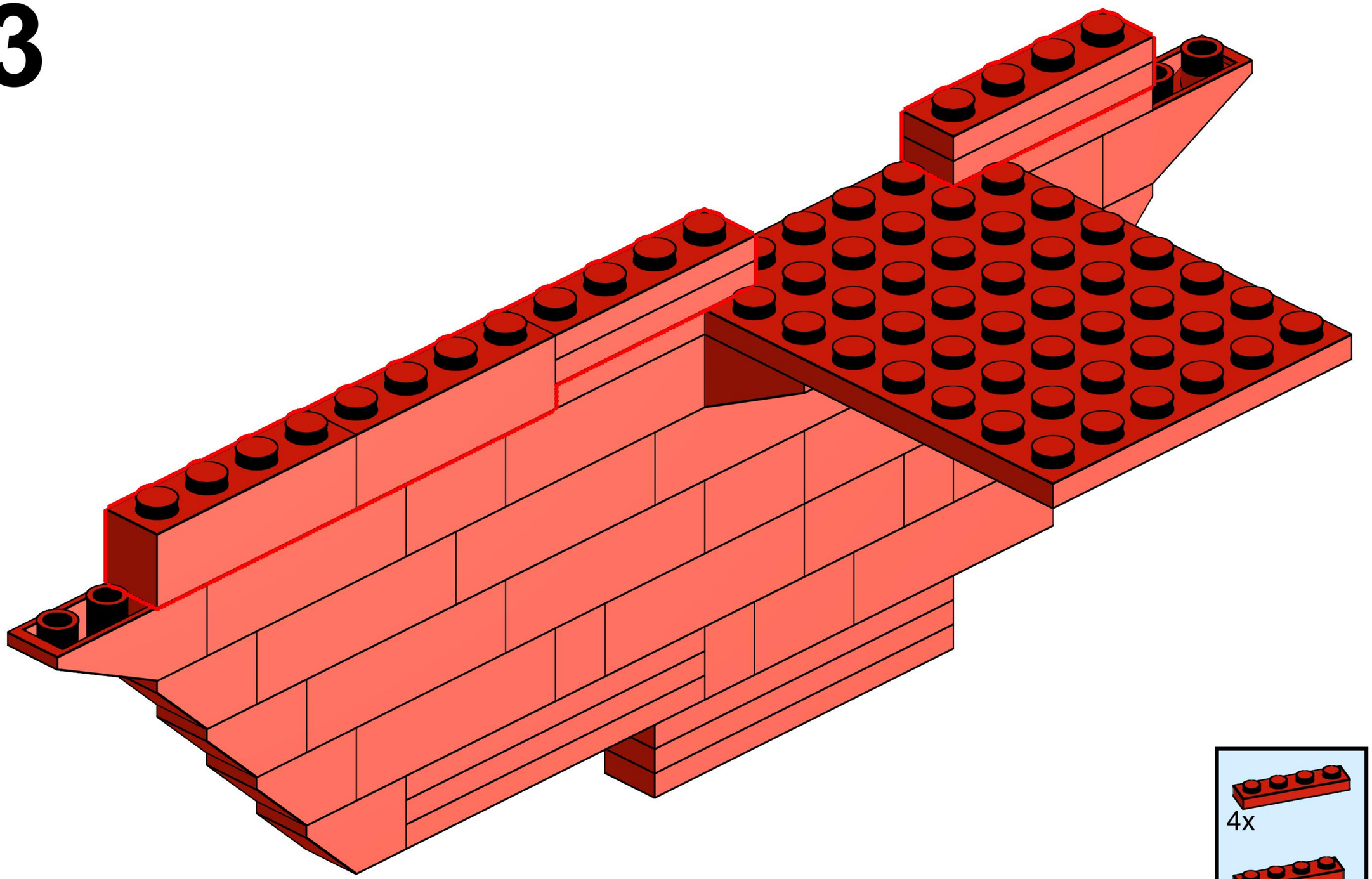

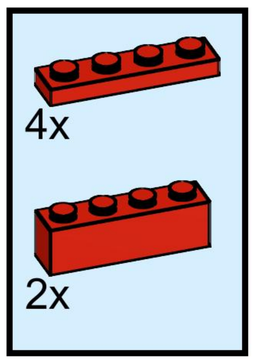

54

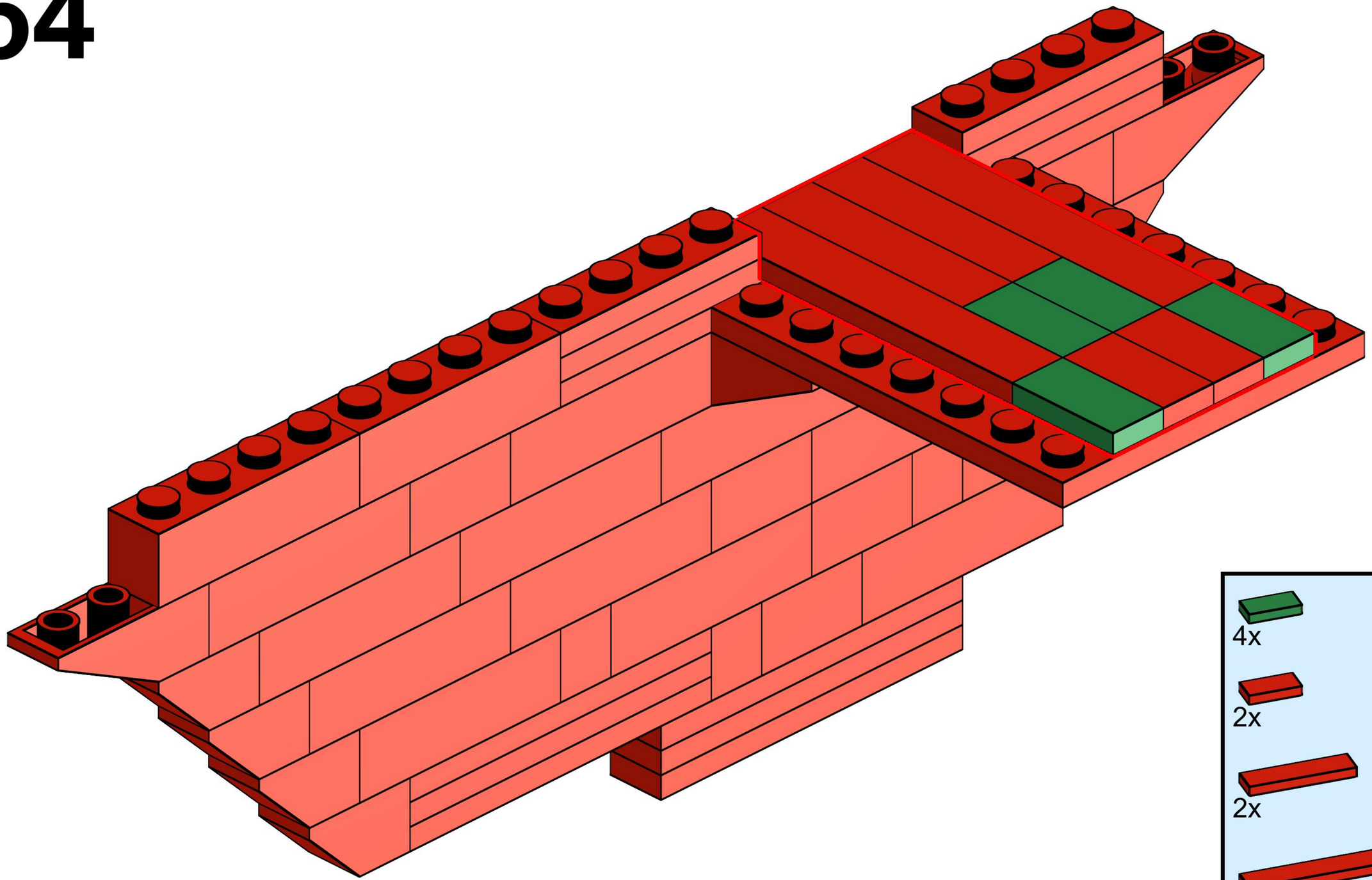

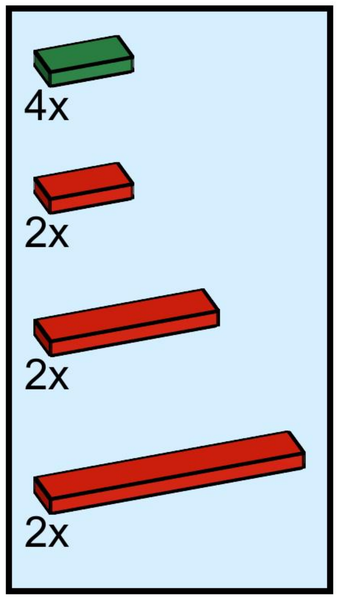

55

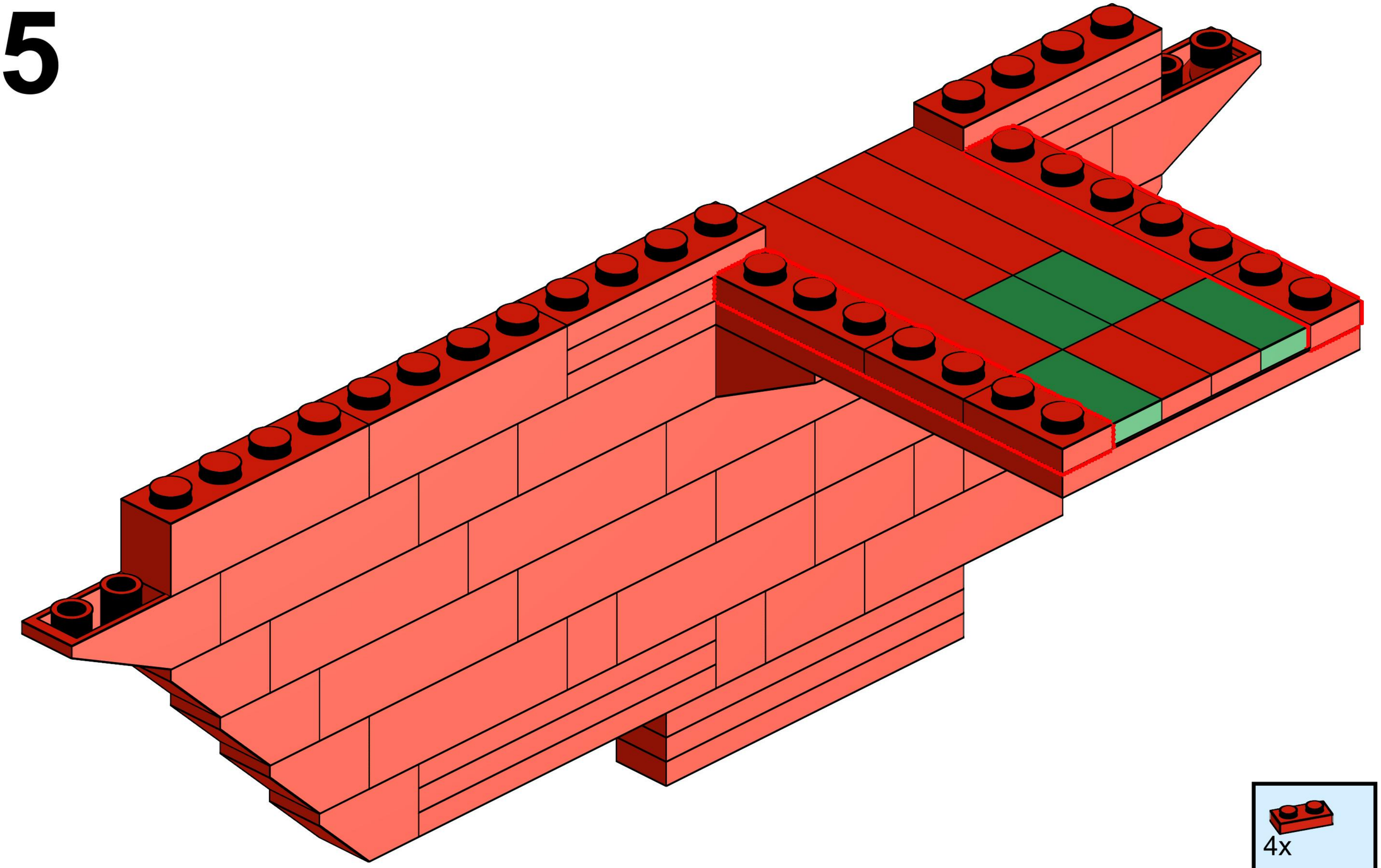

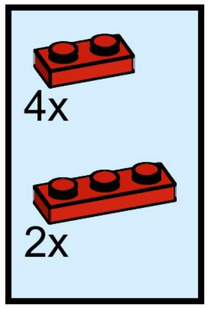

56

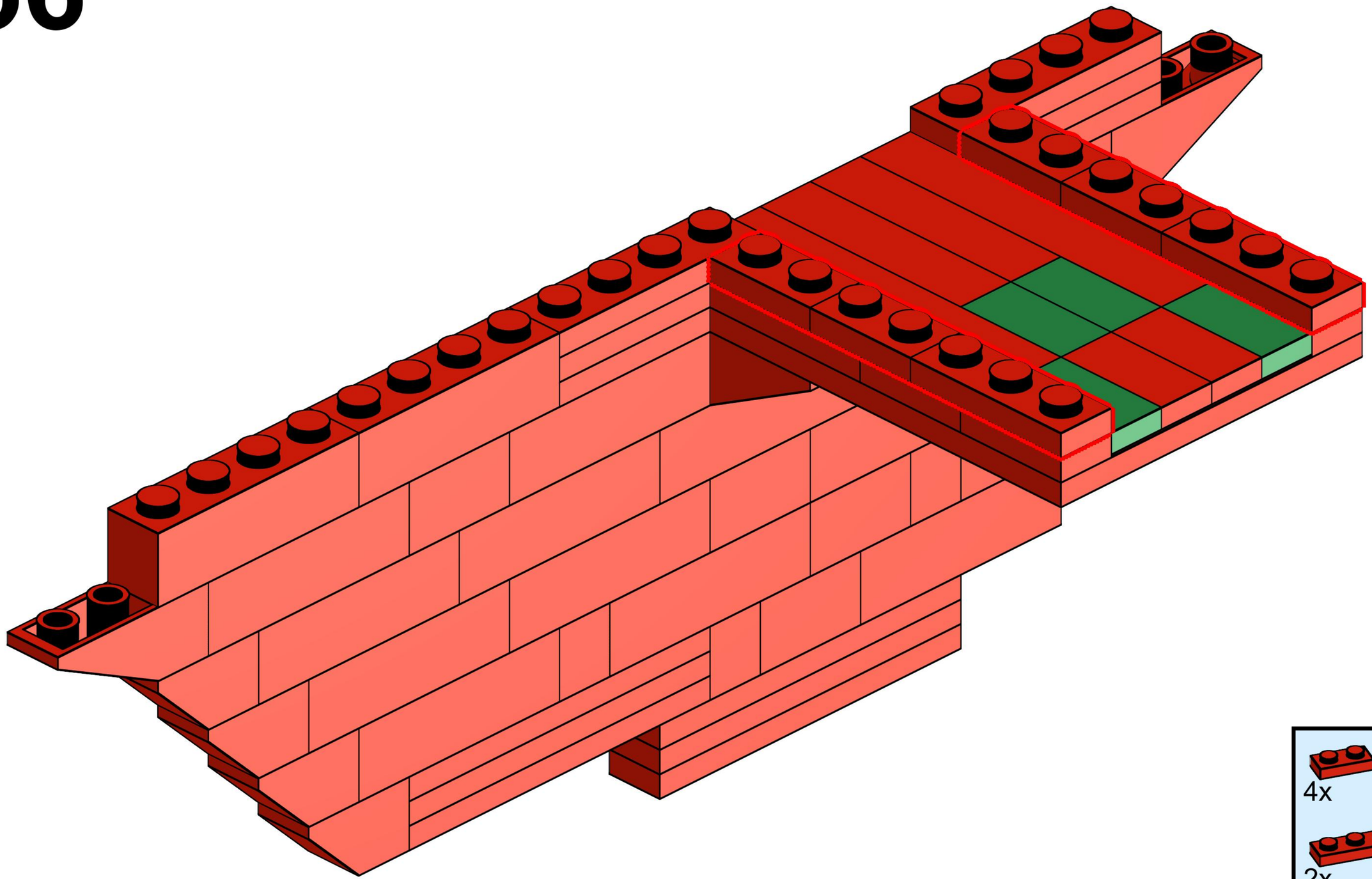

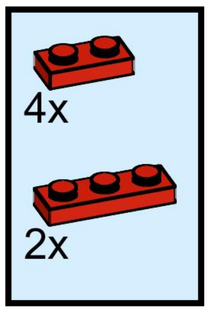

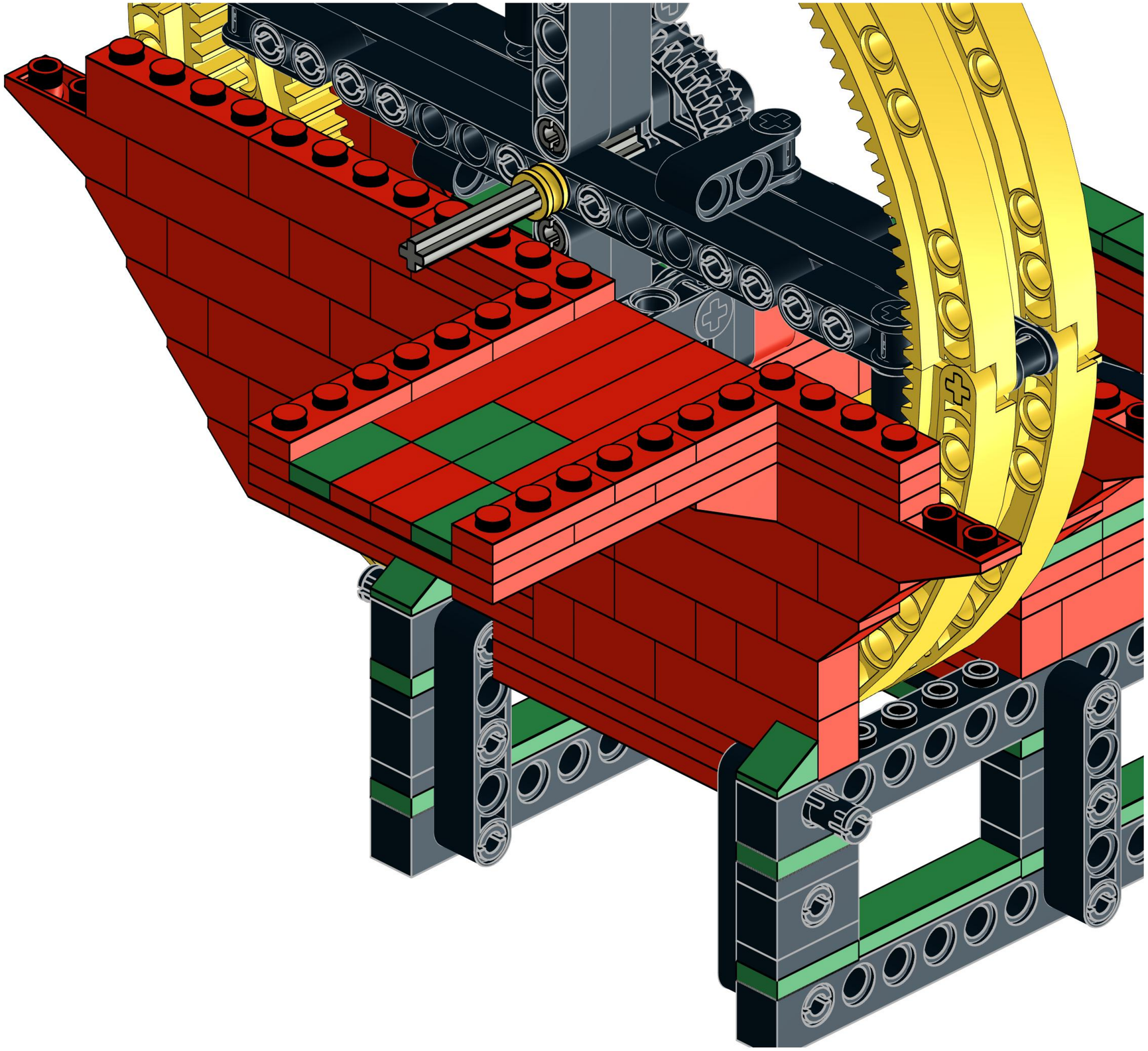

58

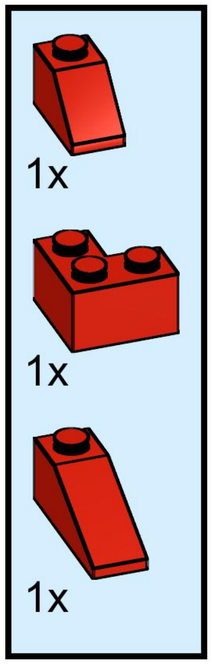

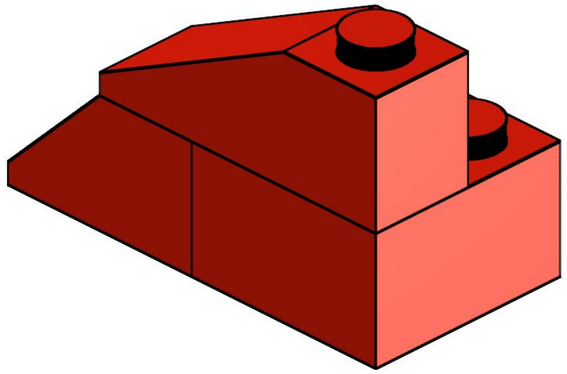

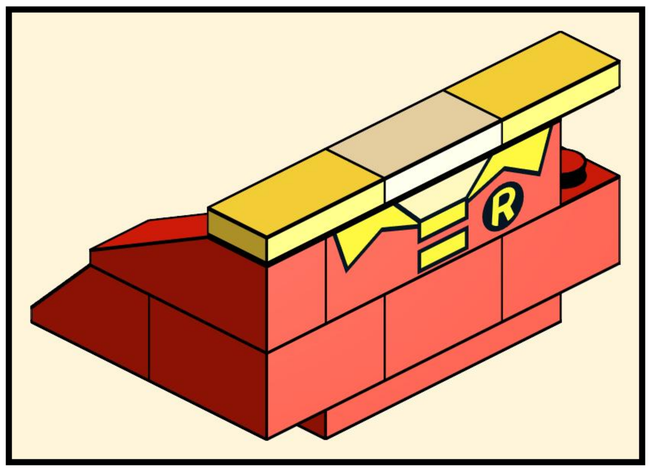

59

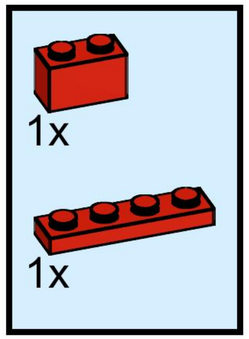

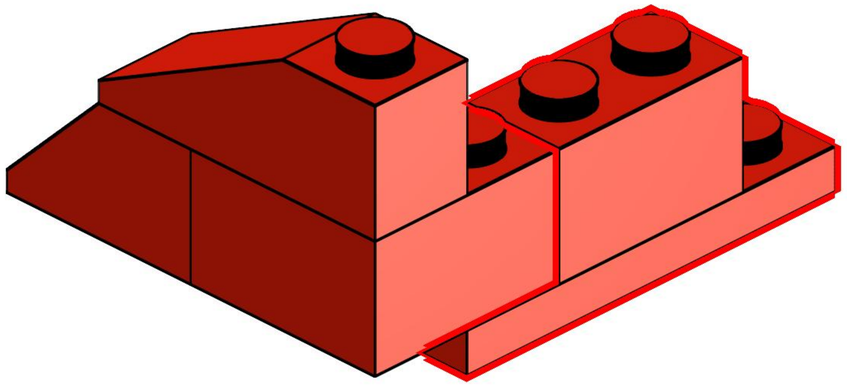

60

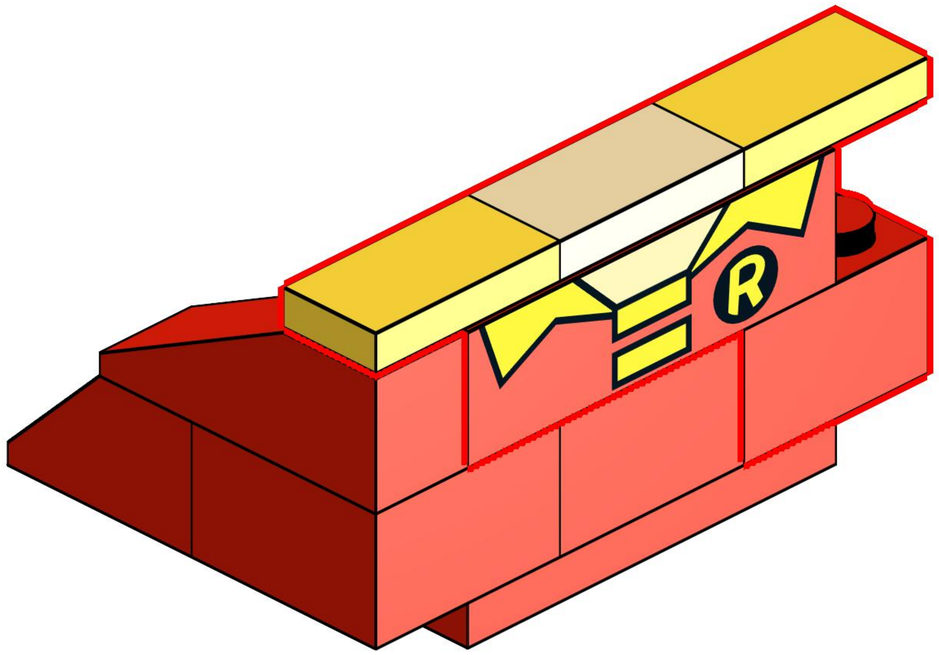

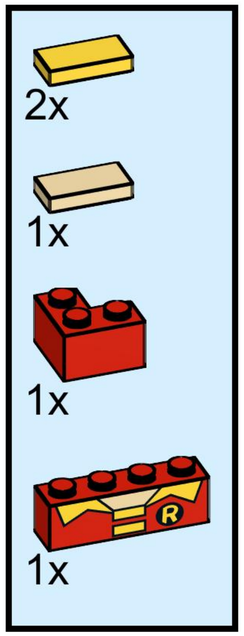

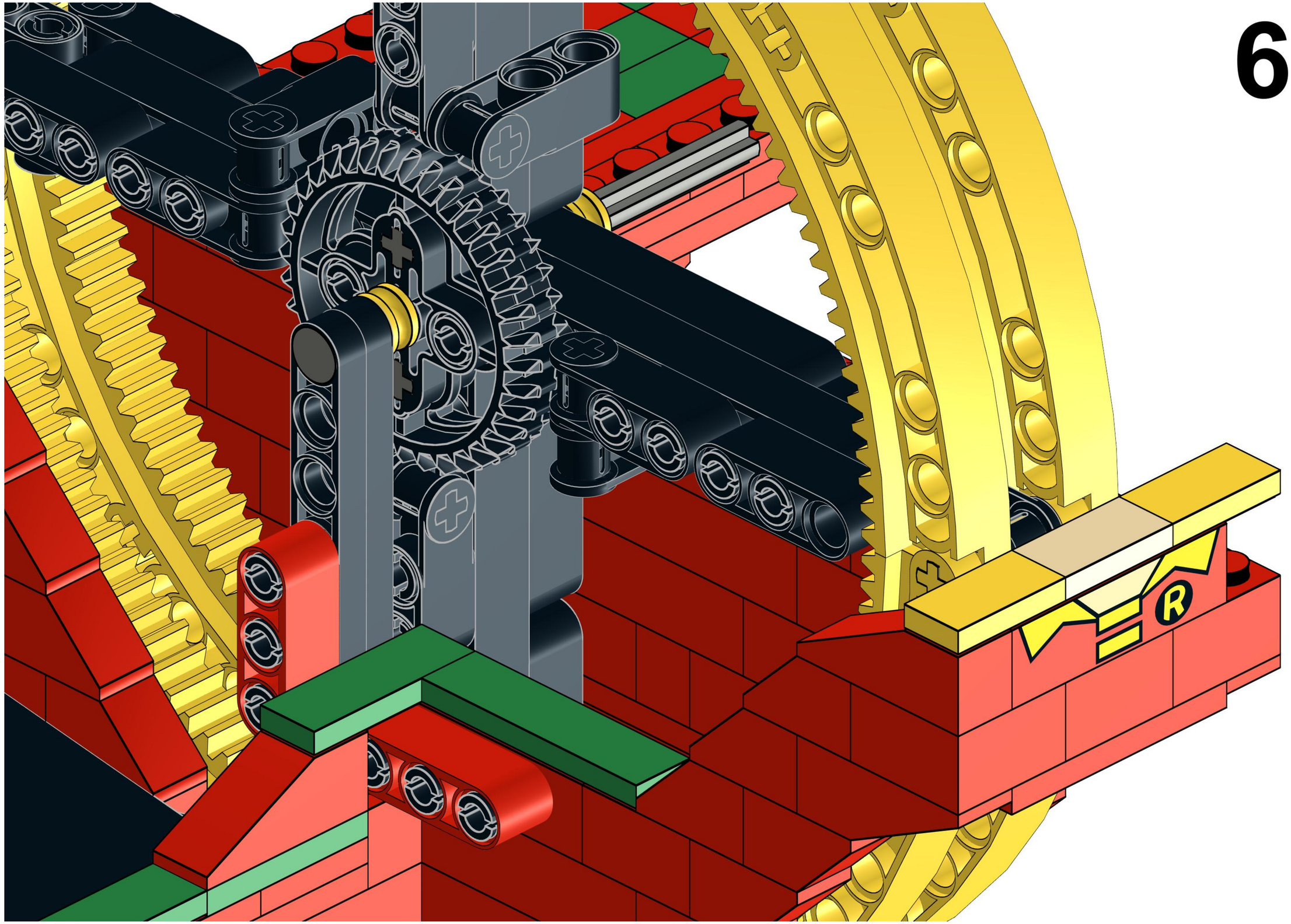
R

62

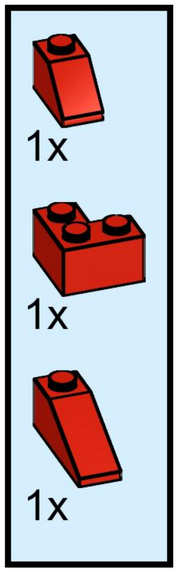

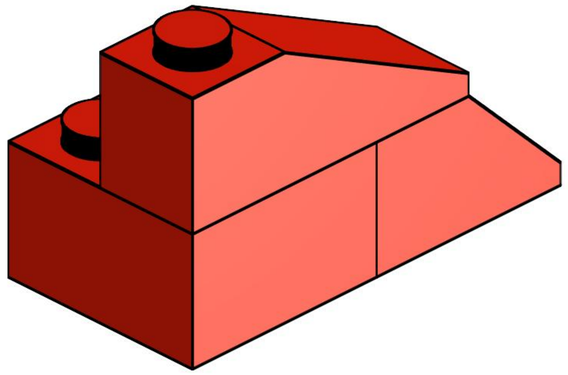

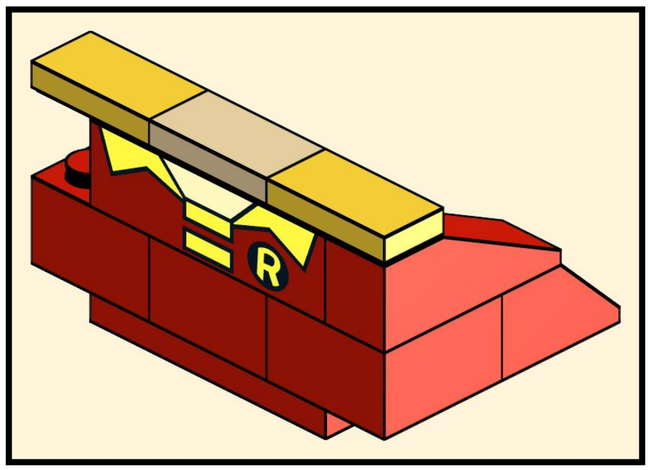

63

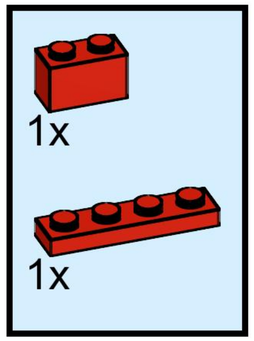

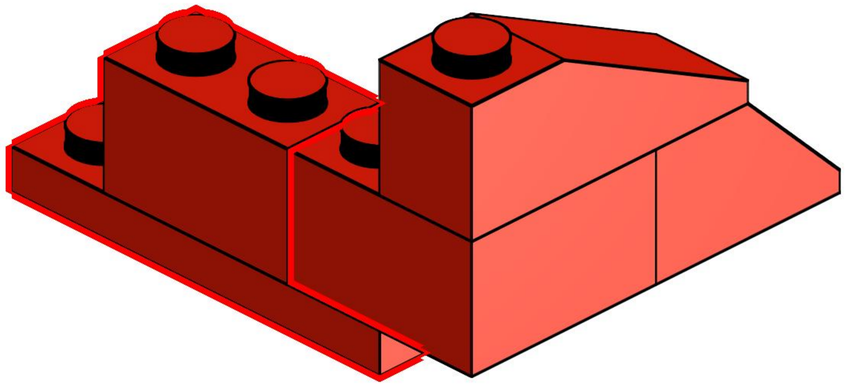

64

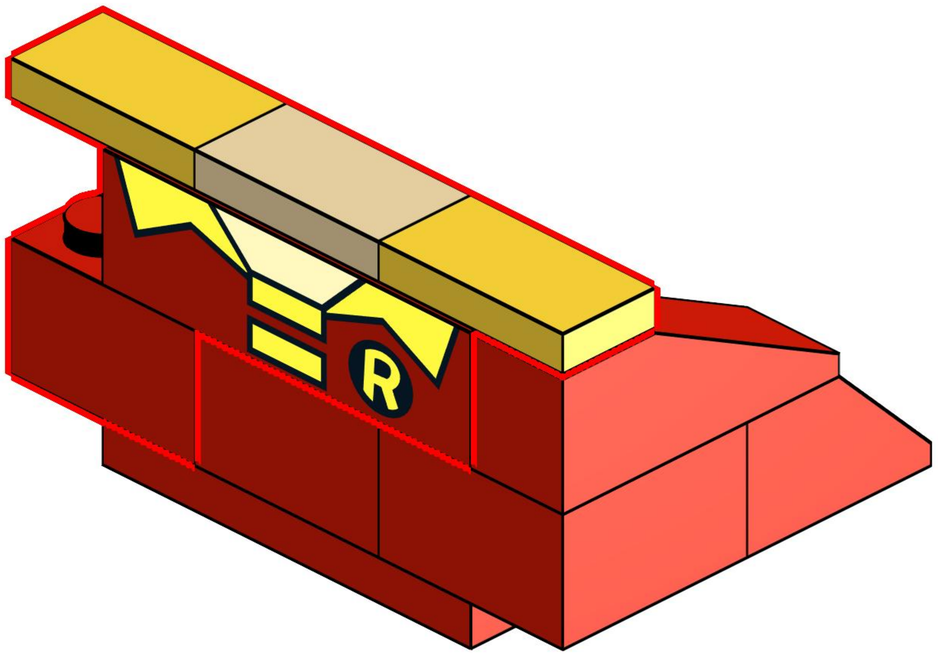

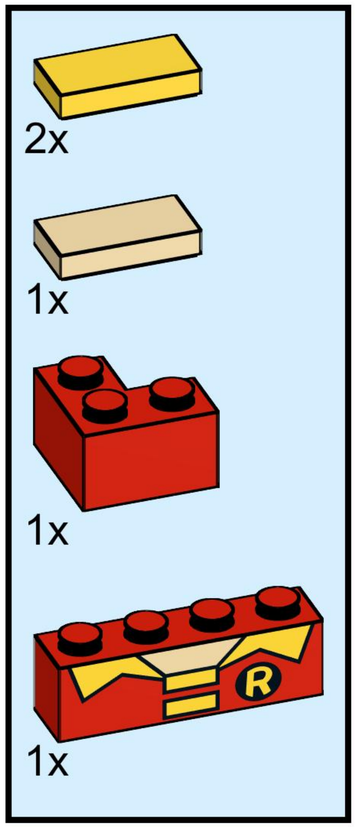

65

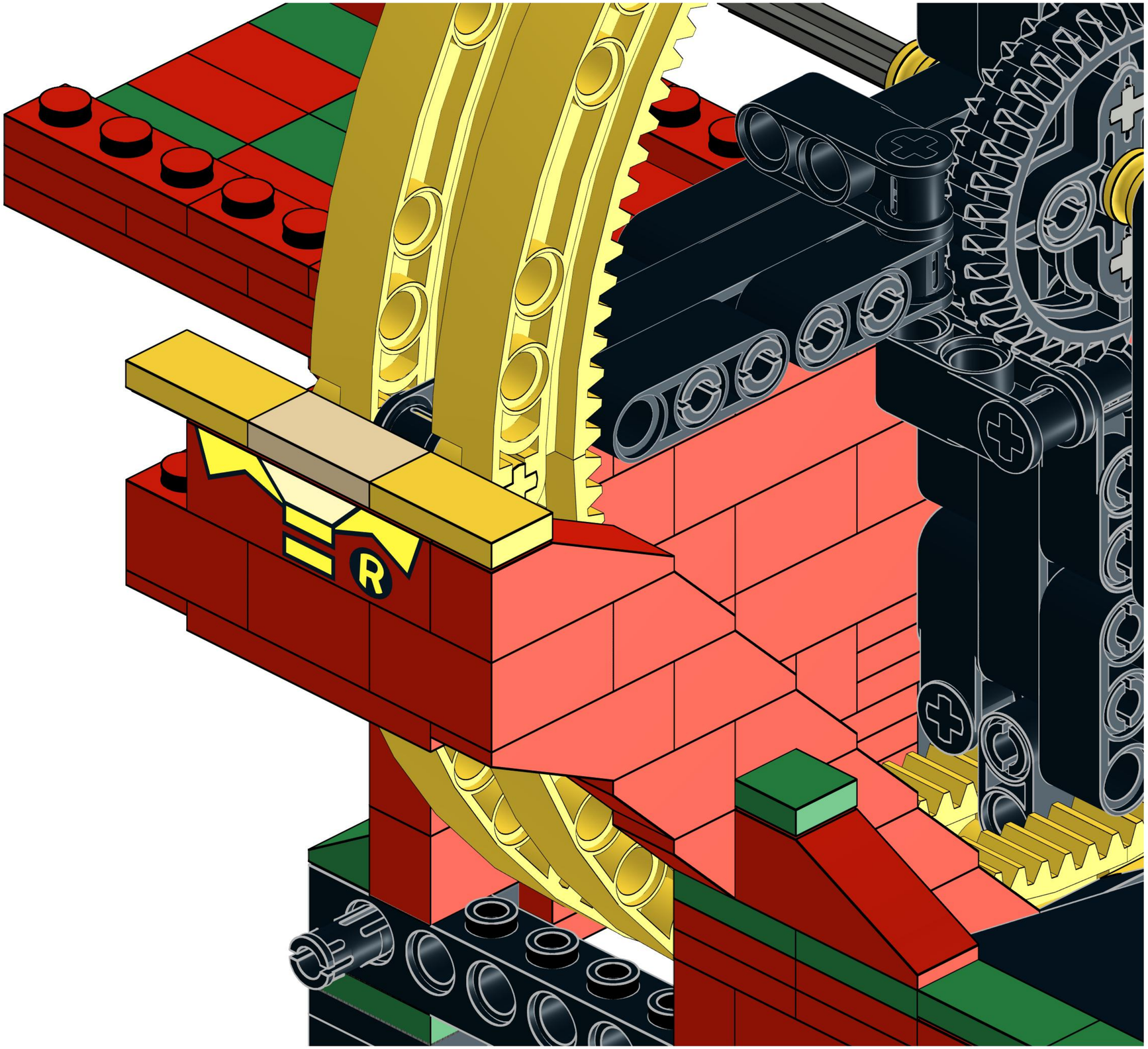

66

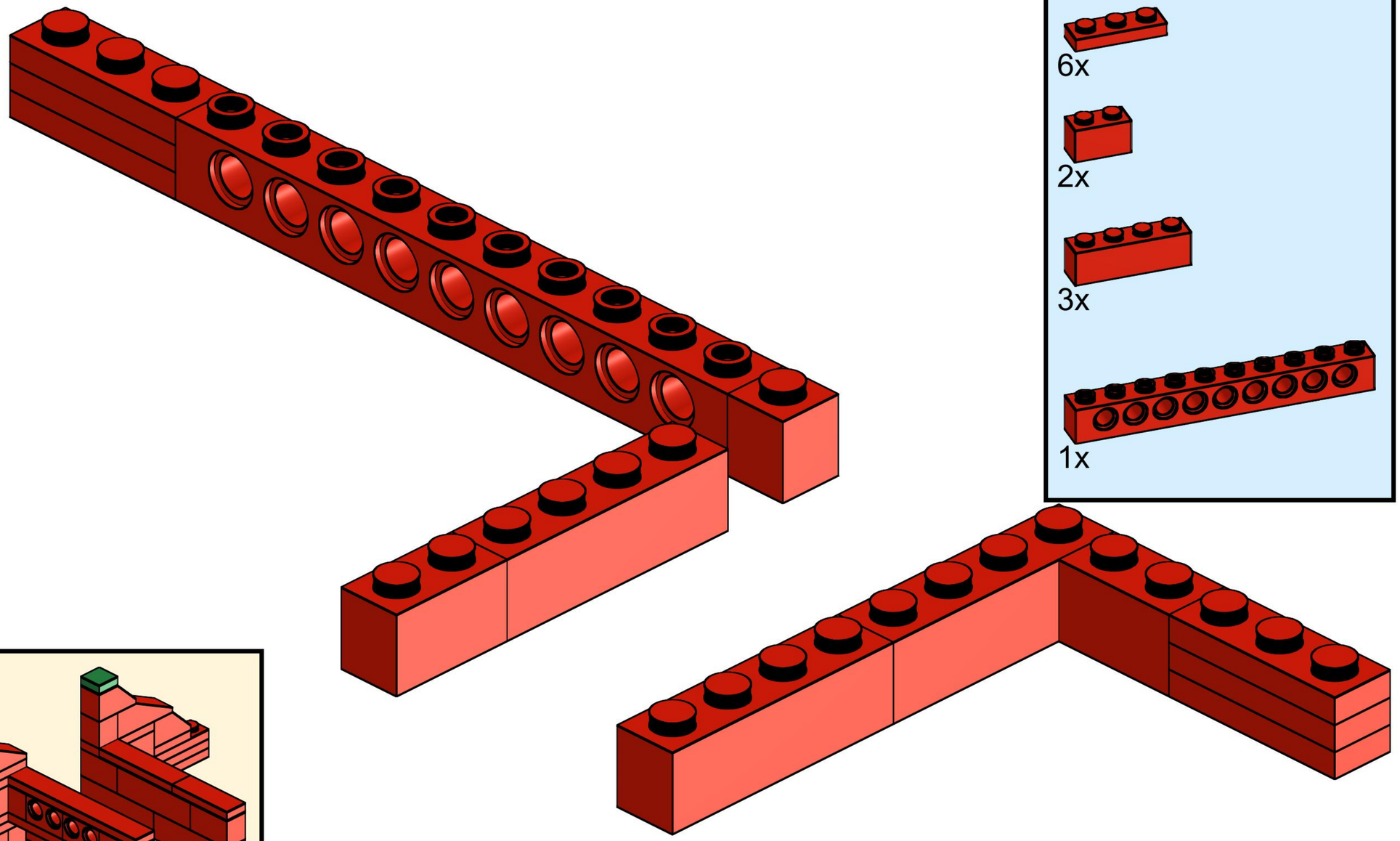

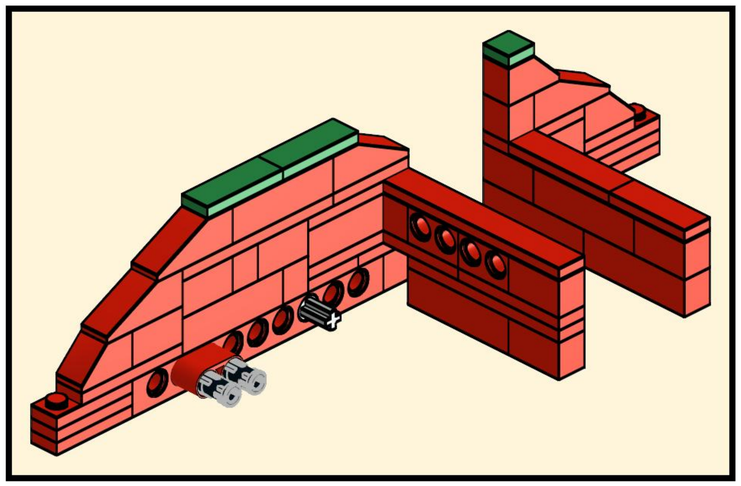

These parts should be built directly on top of the just-built lower rear wall. The entire model is not shown here as it is visually very "cluttered" and difficult to see new parts being placed.

** Review Step 76 and then come back and continue **

67

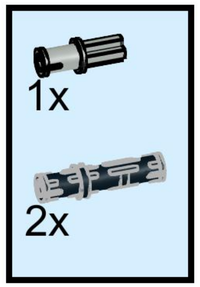

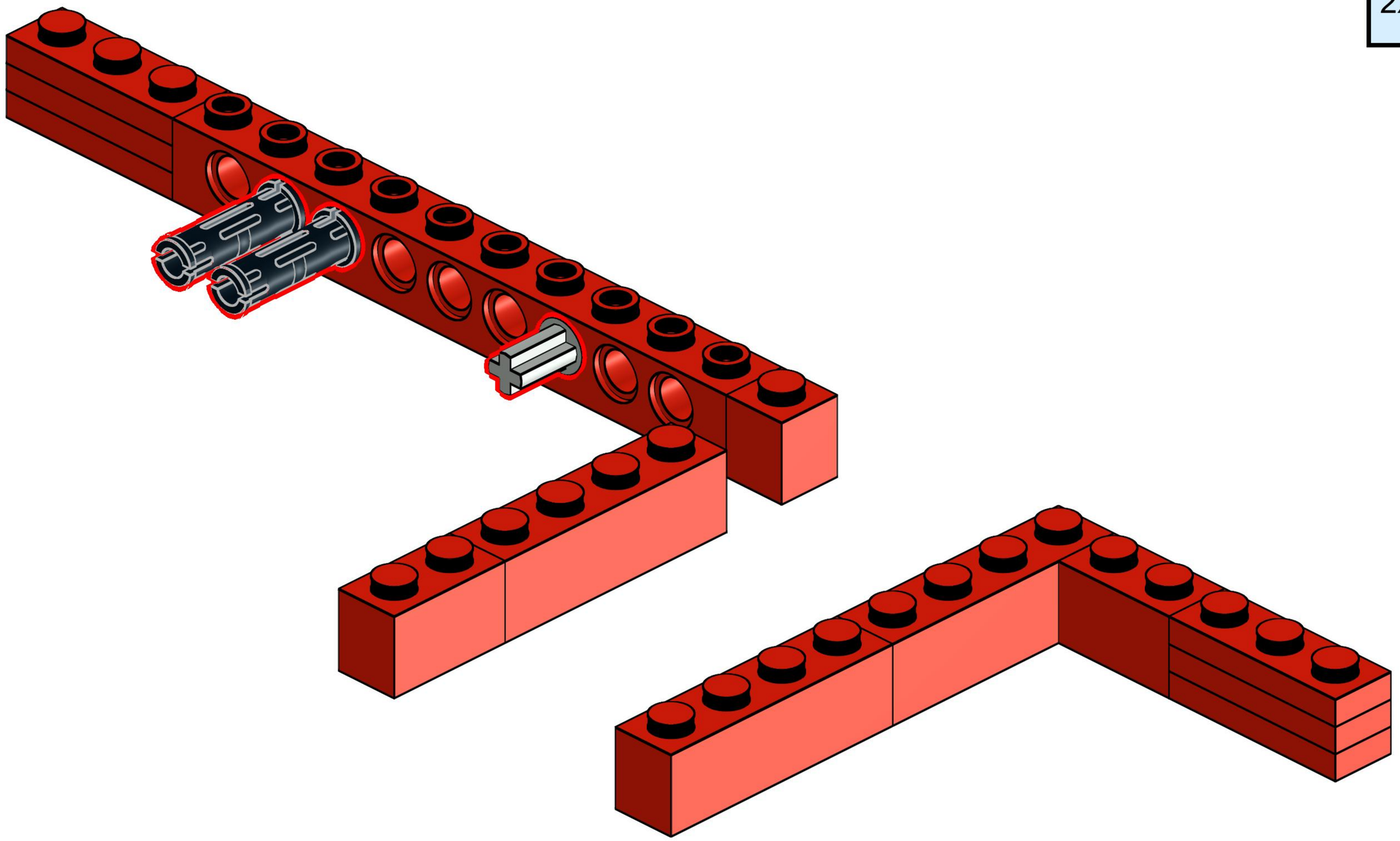

68

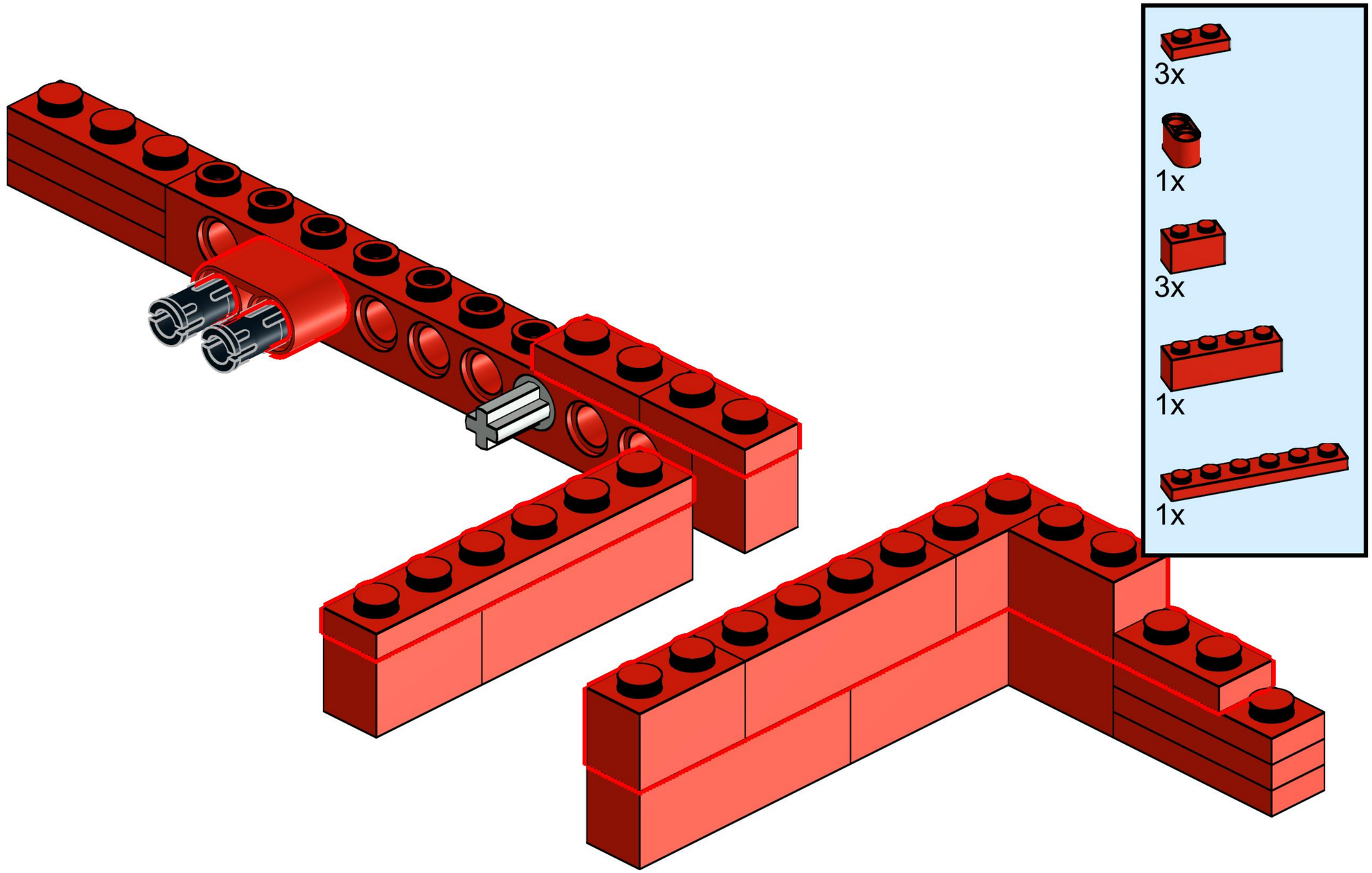

69

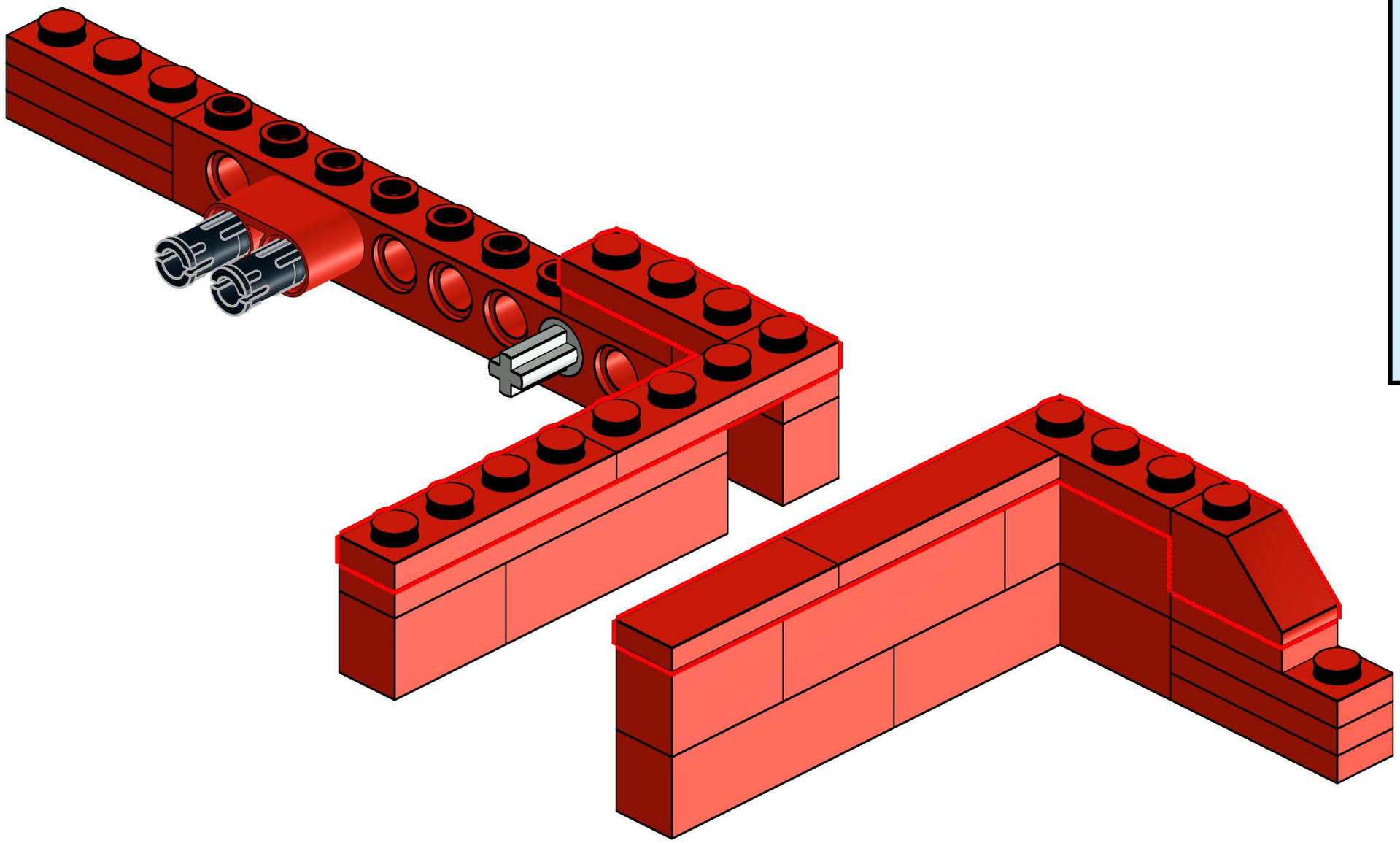

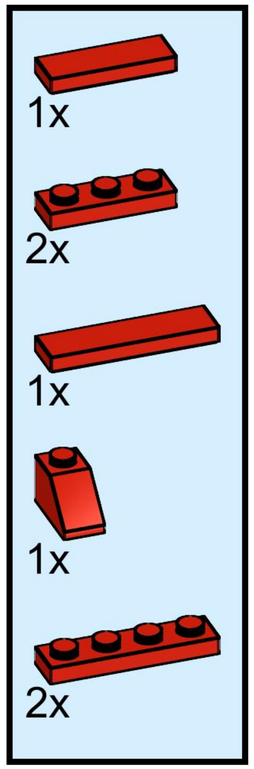

70

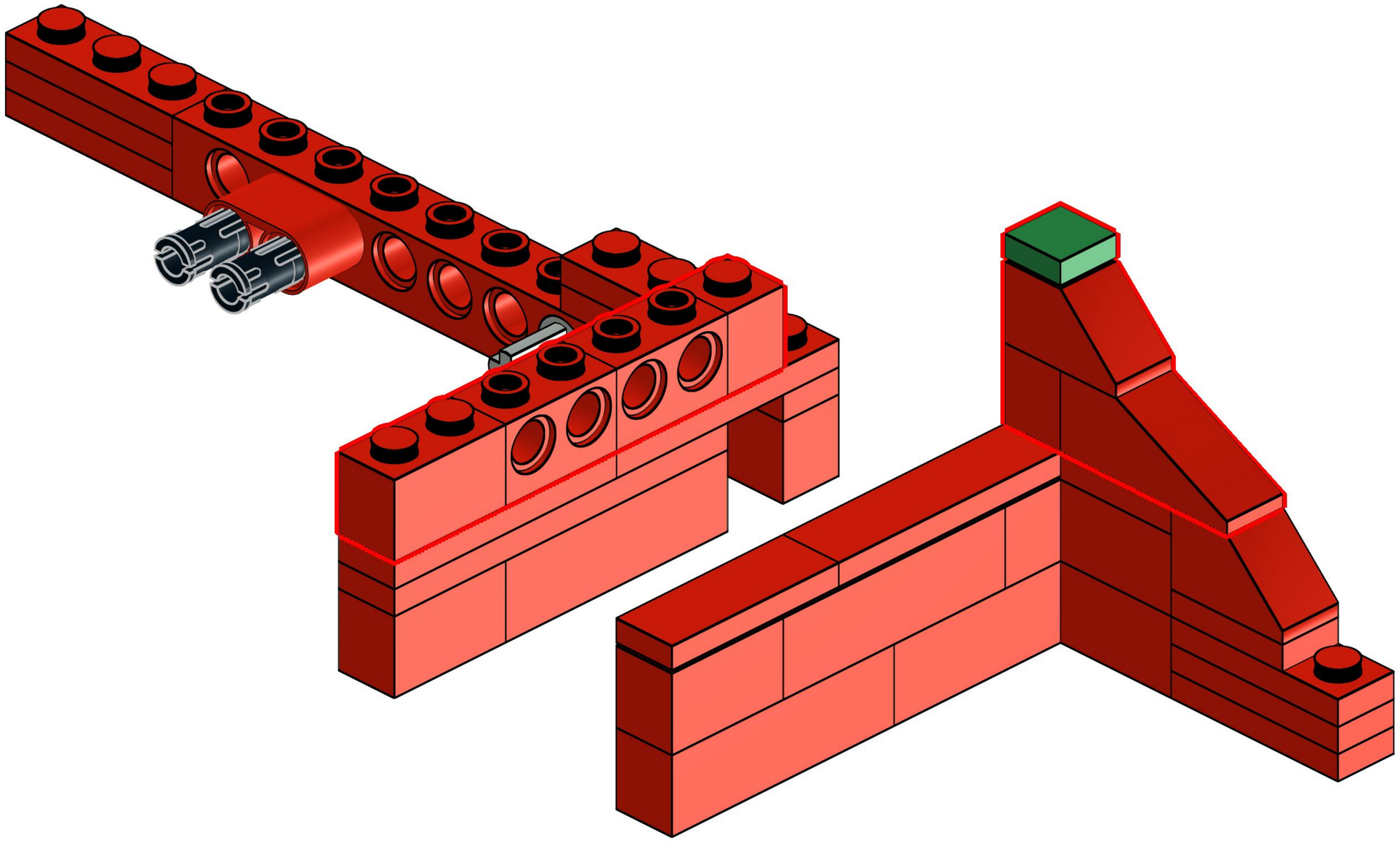

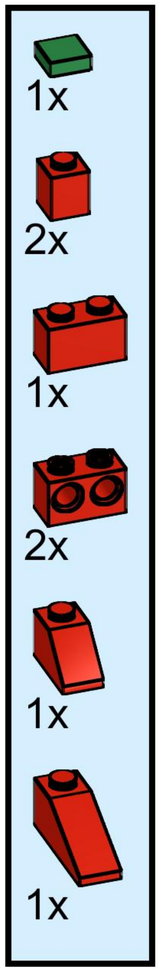

71

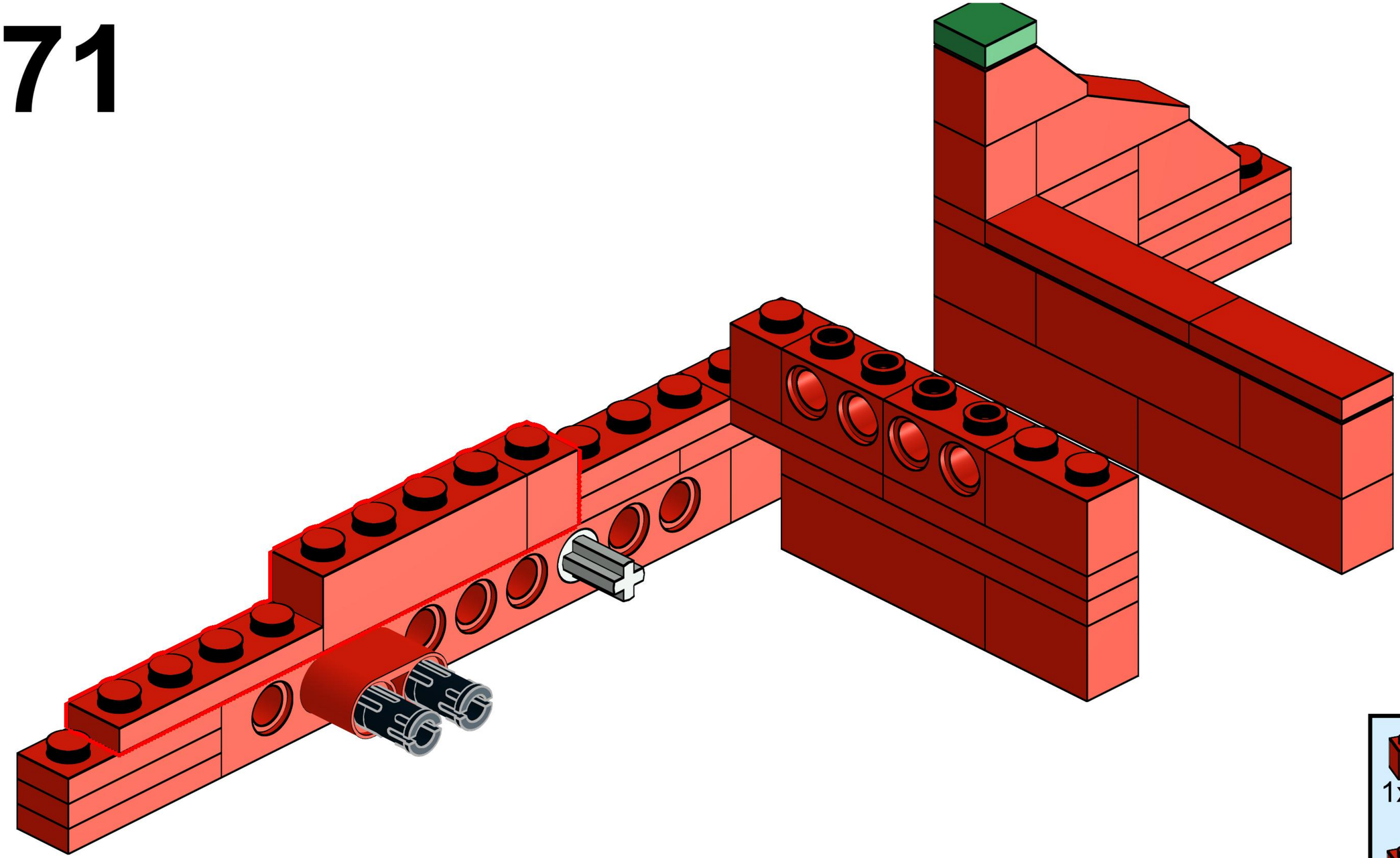

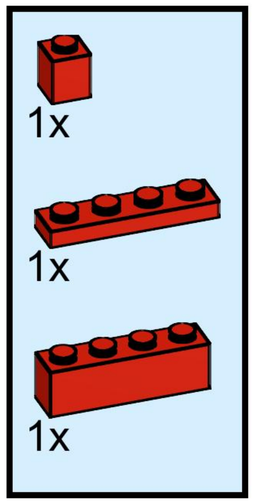

72

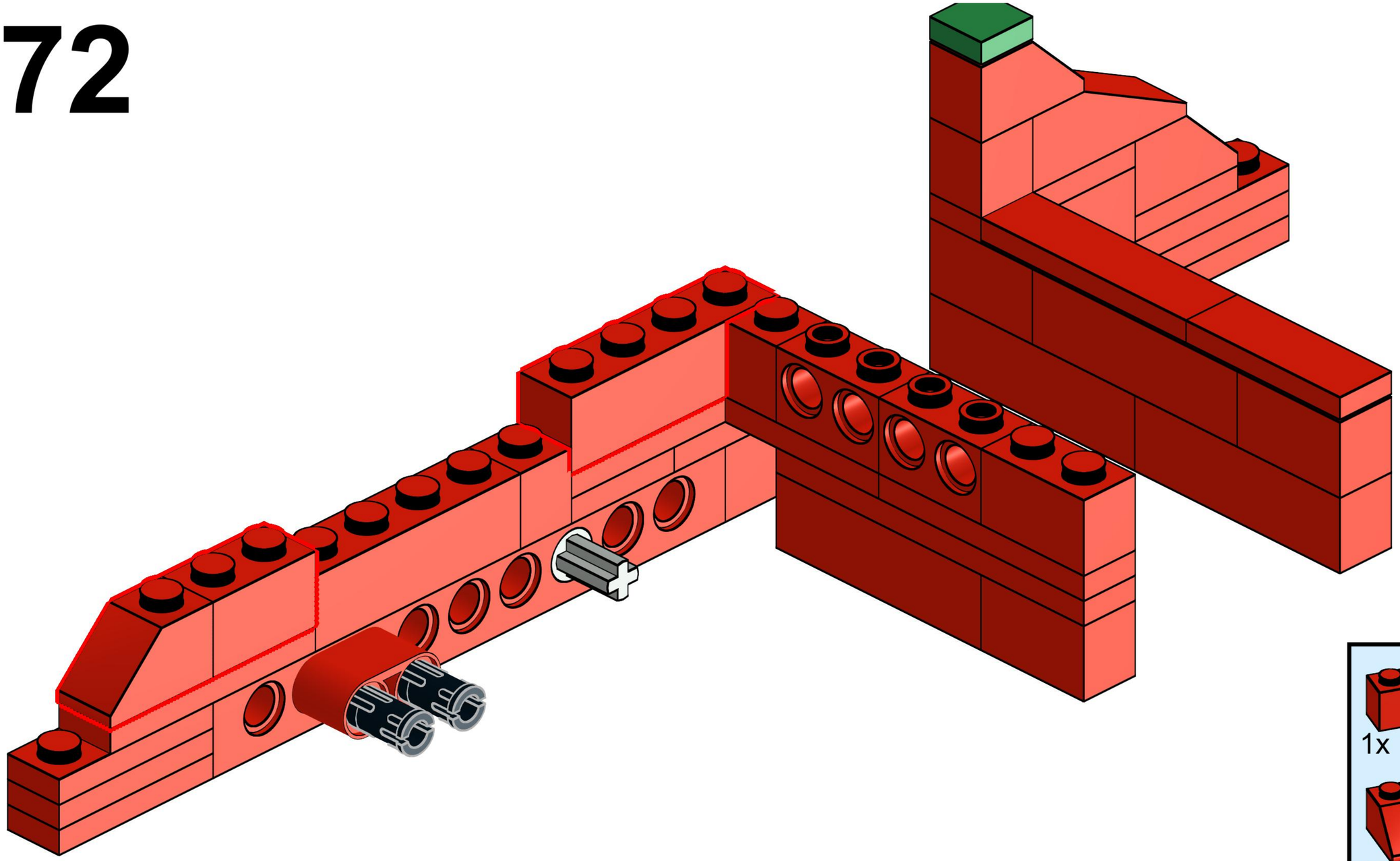

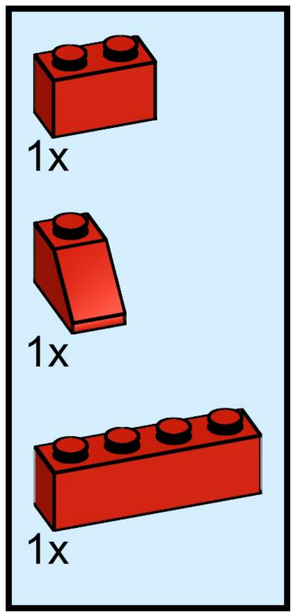

73

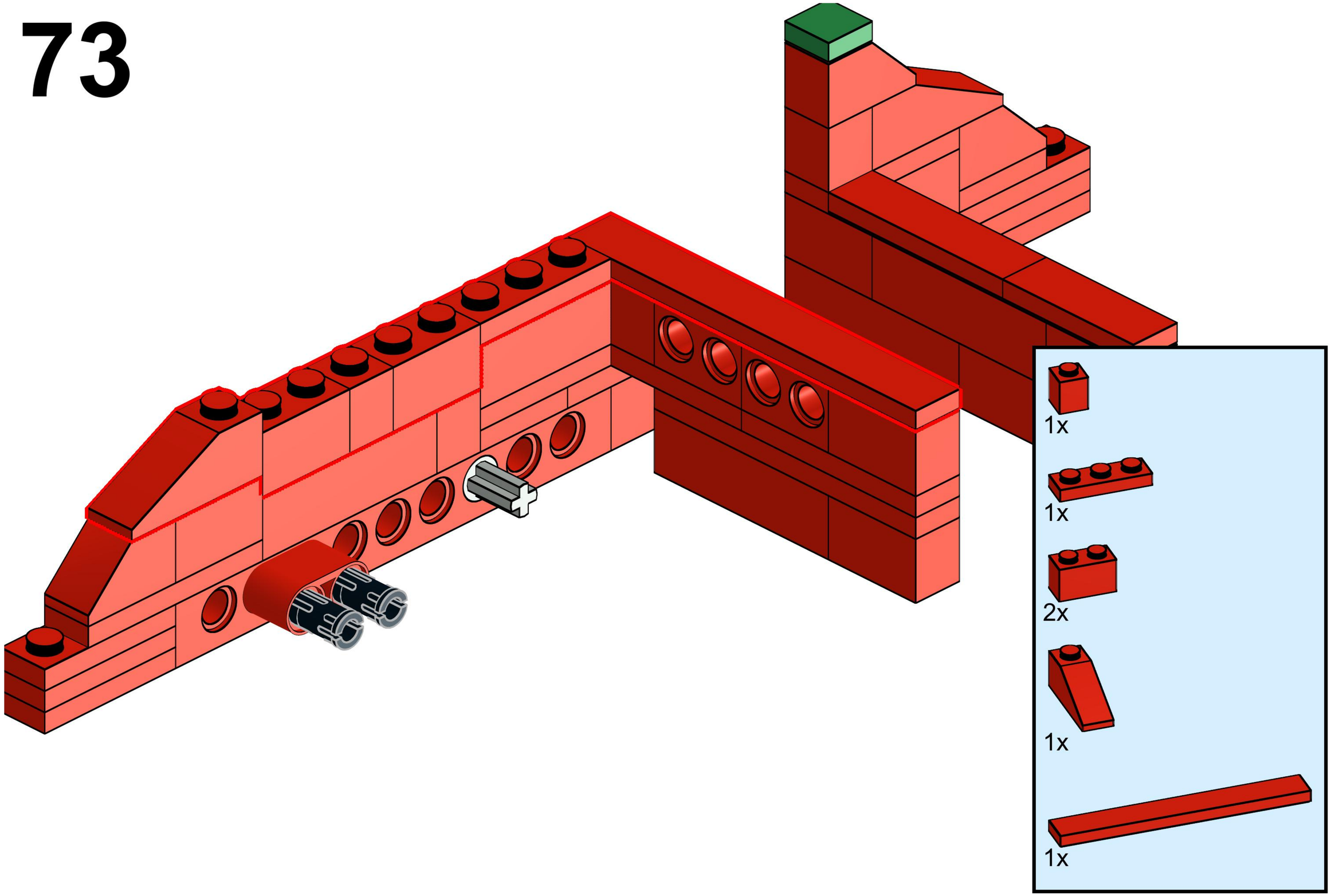

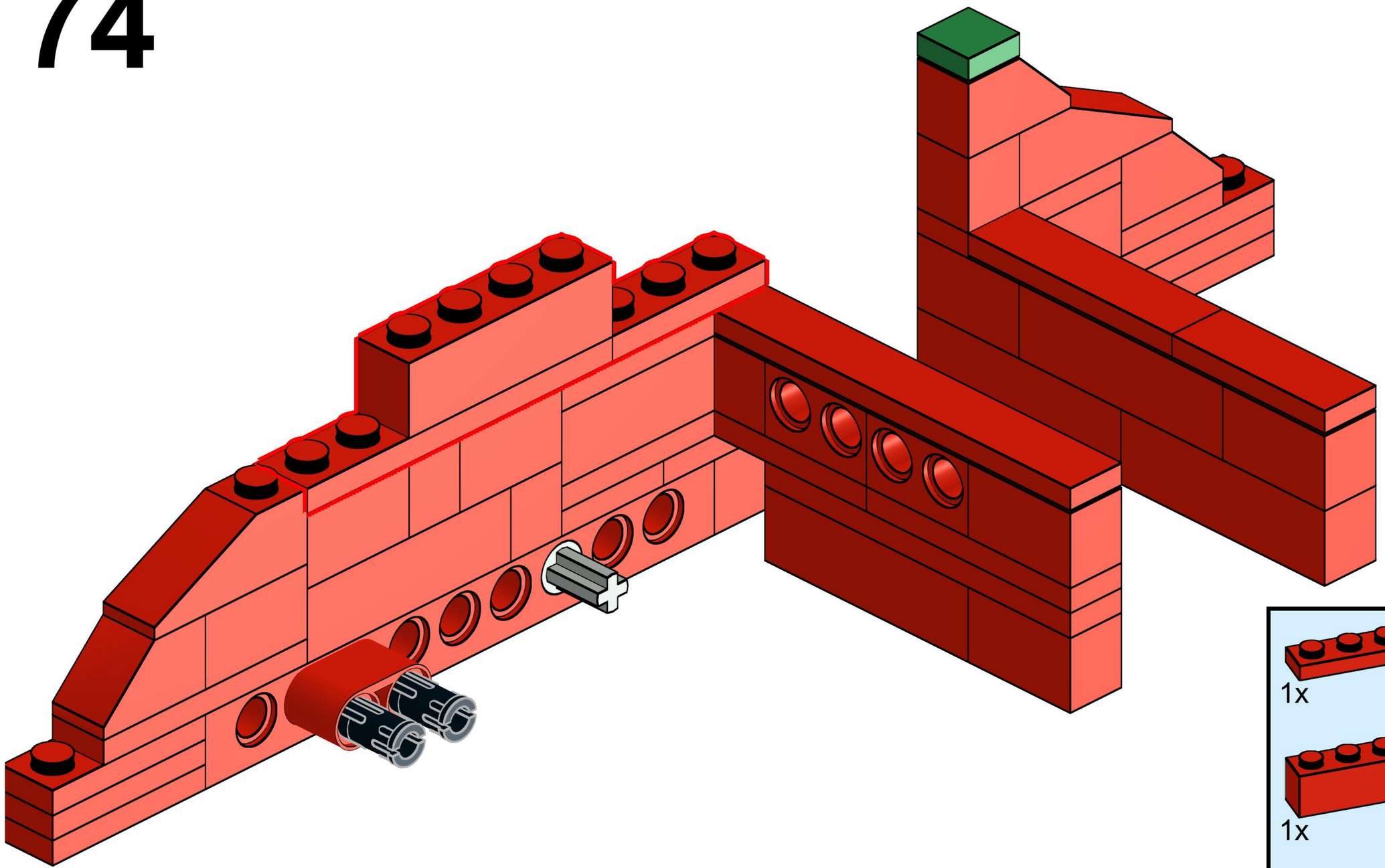

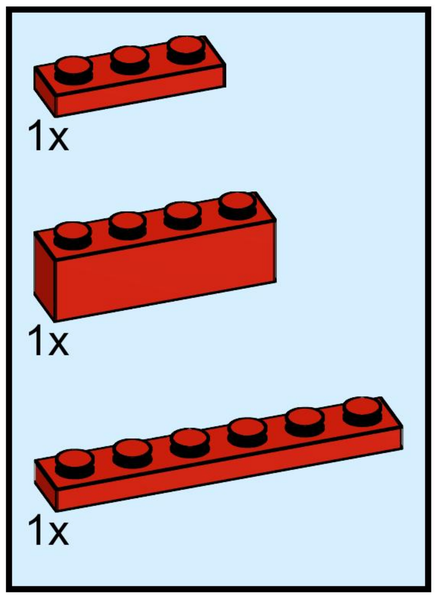
1x
1x
1x

75

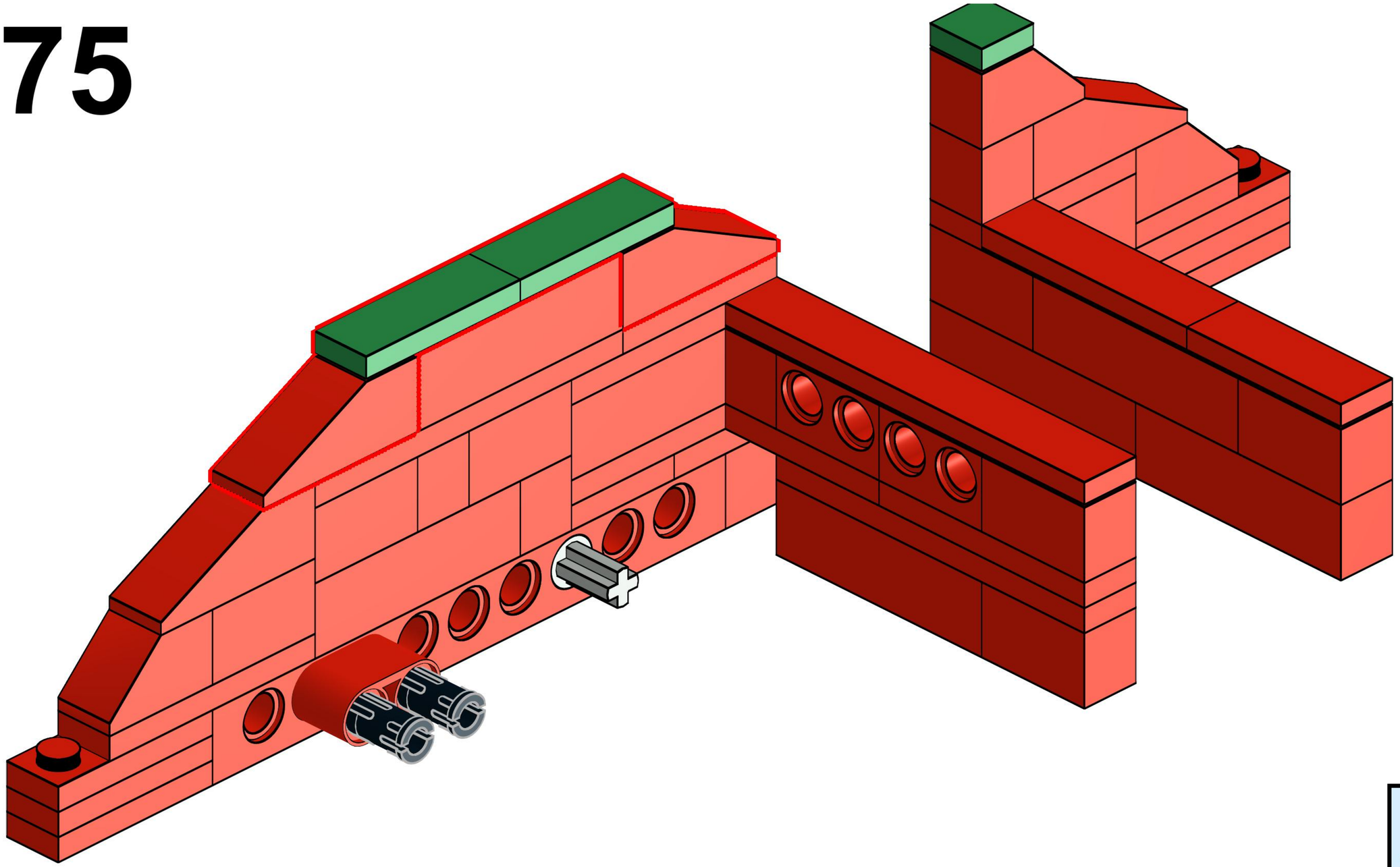

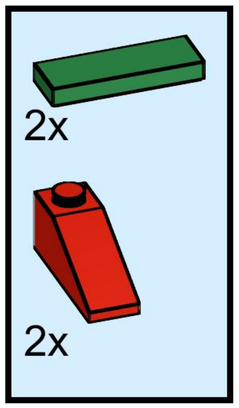

76

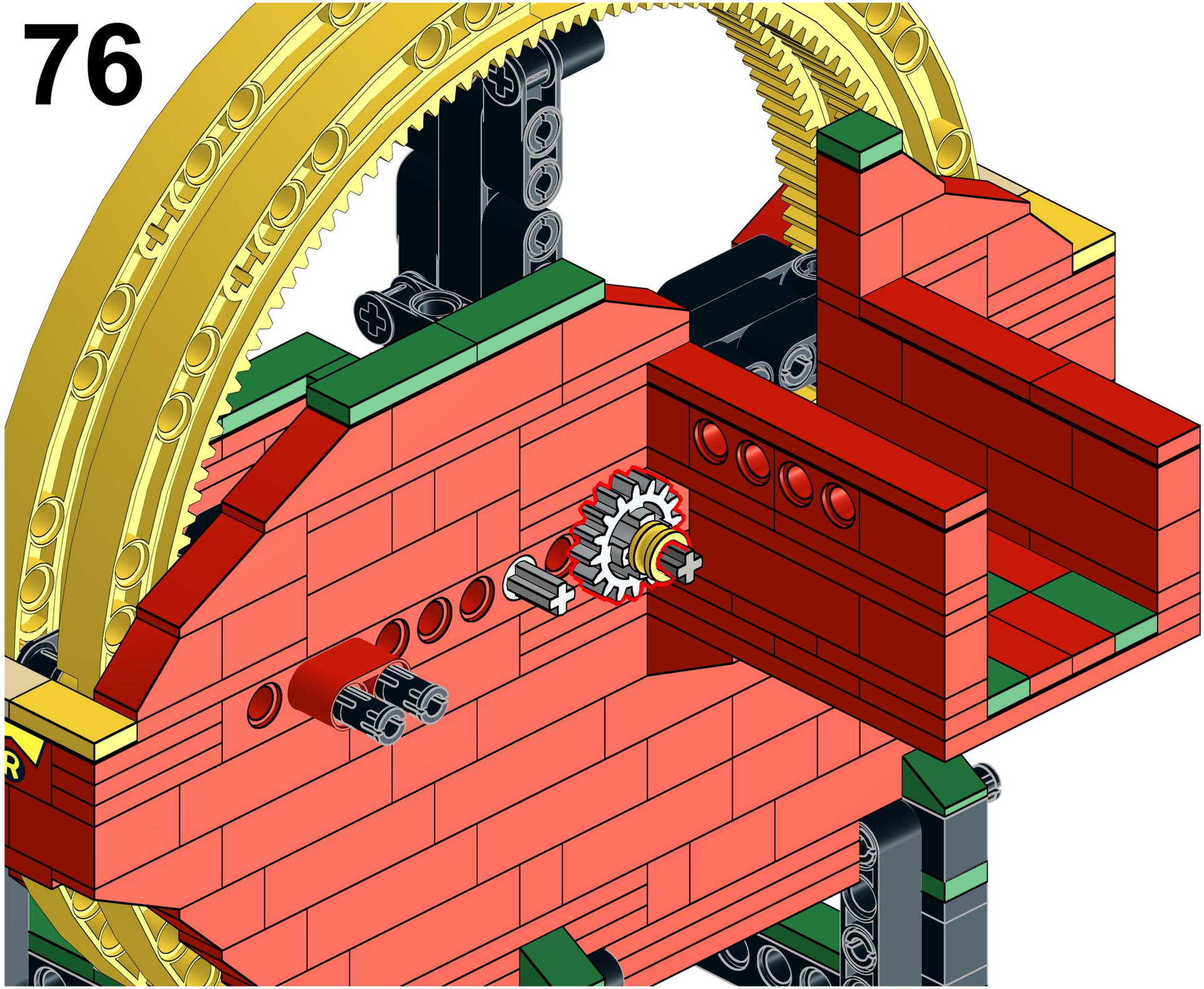

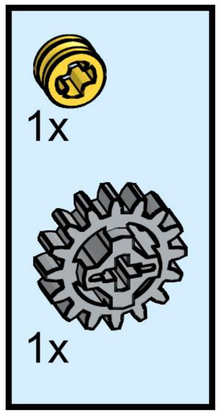

77

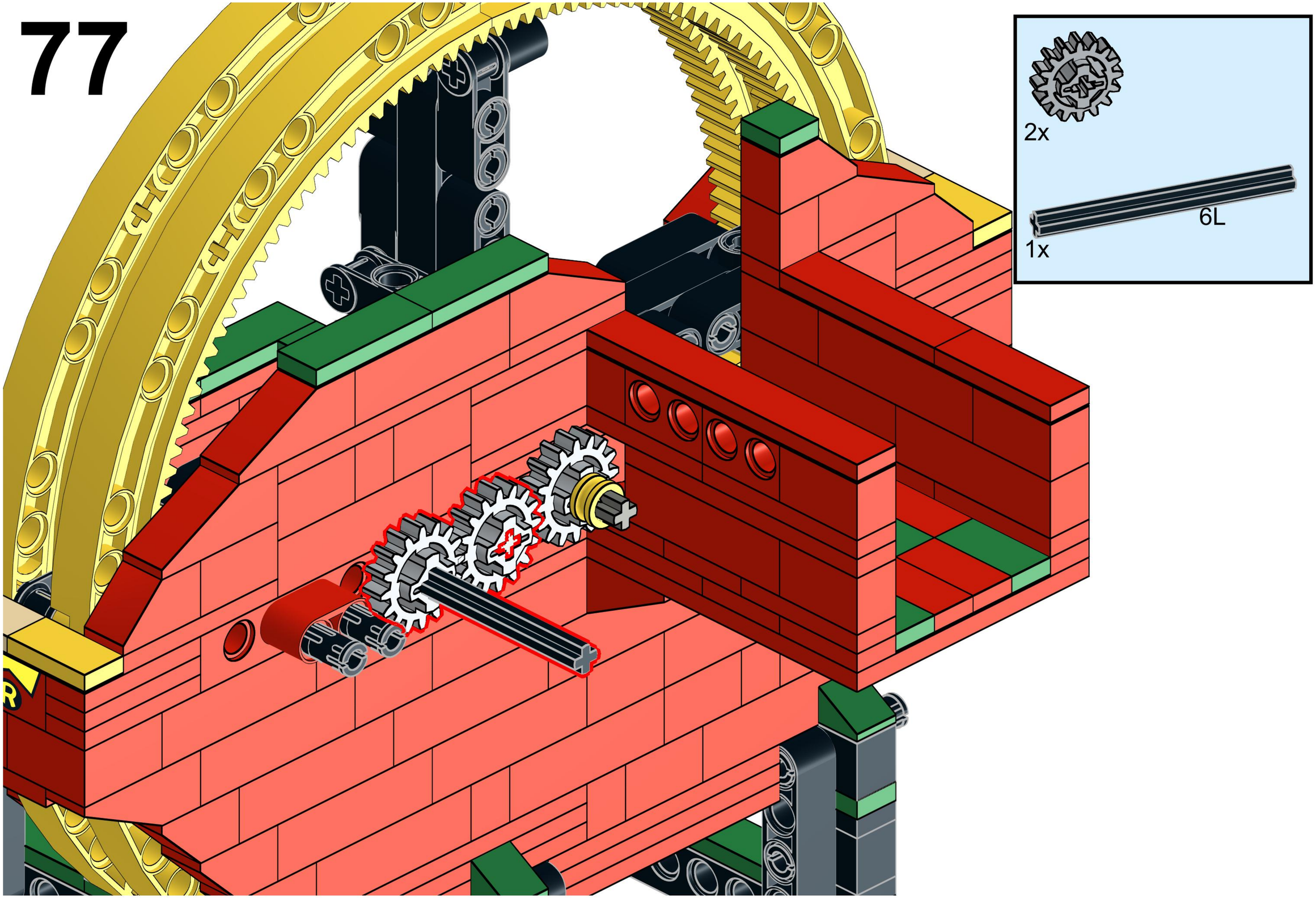

78

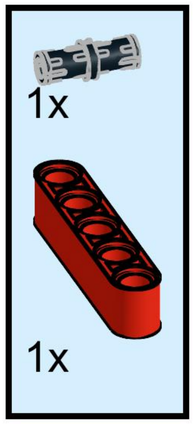

79

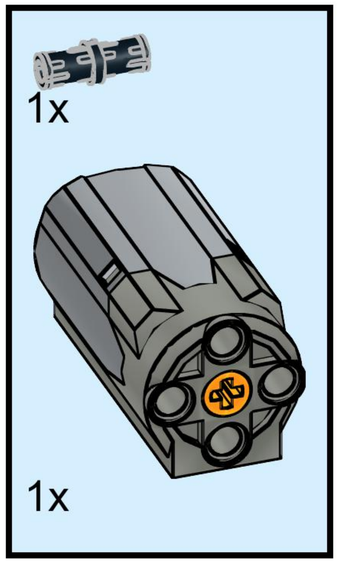

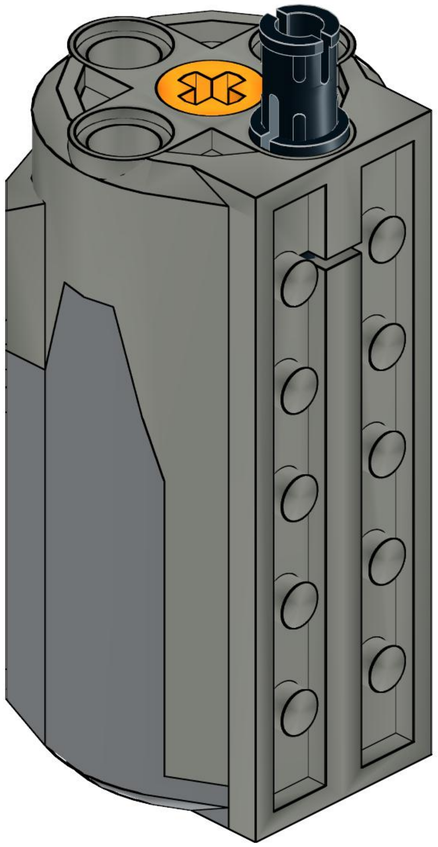

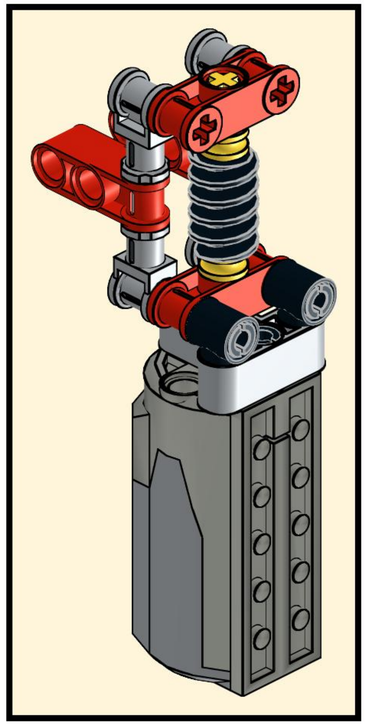

80

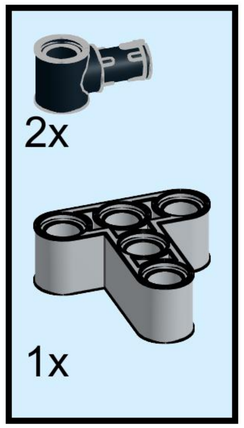

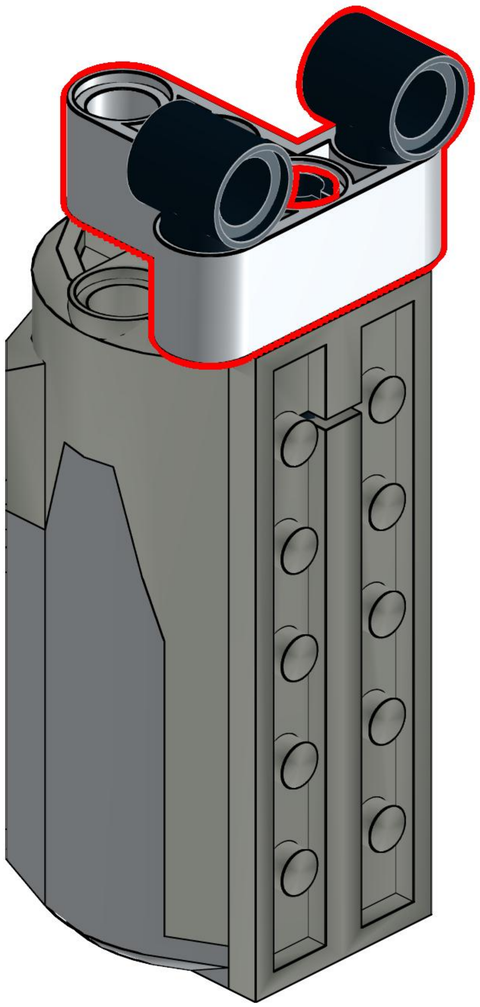

81

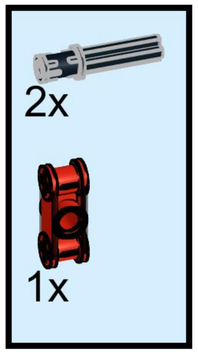

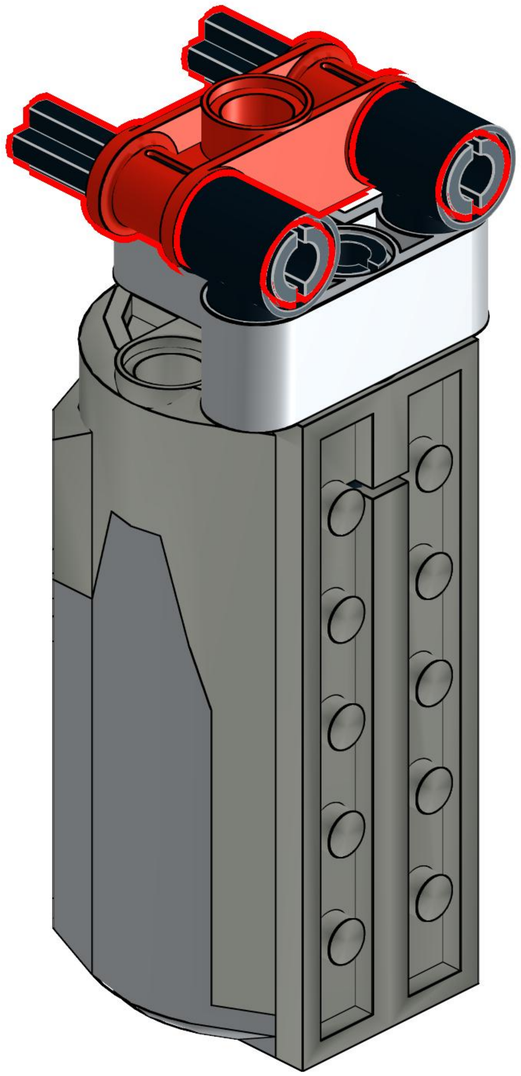

82

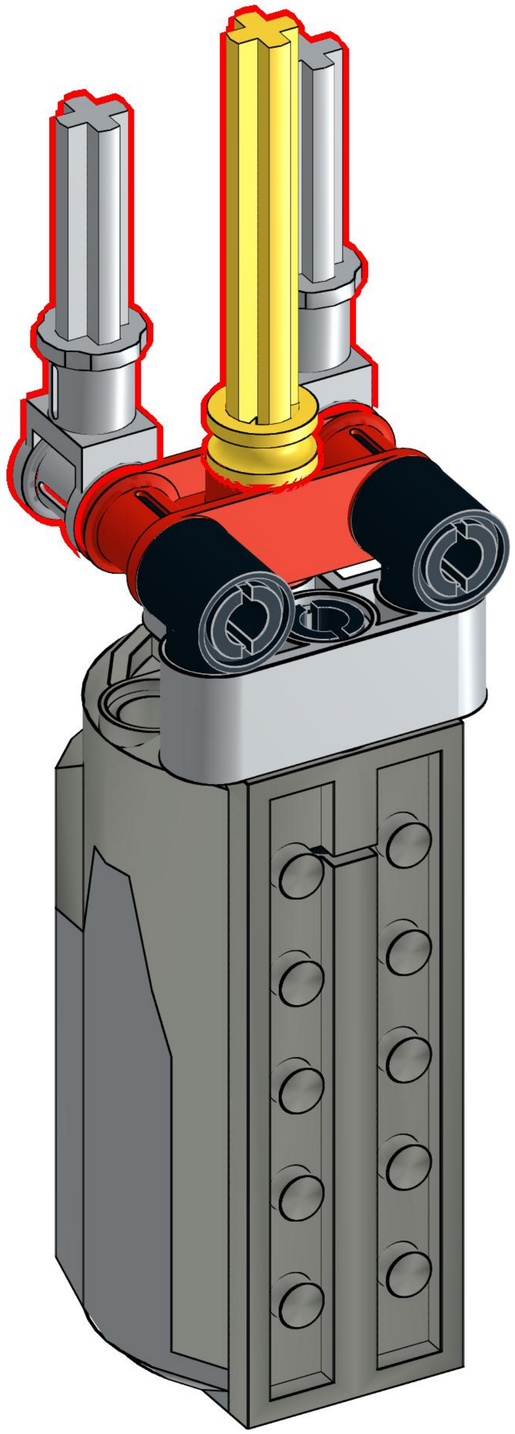

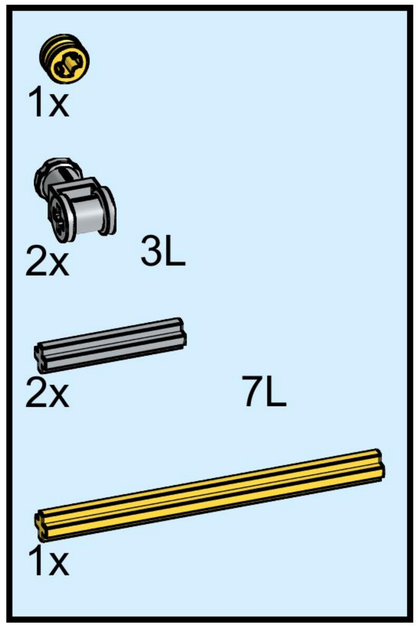

83

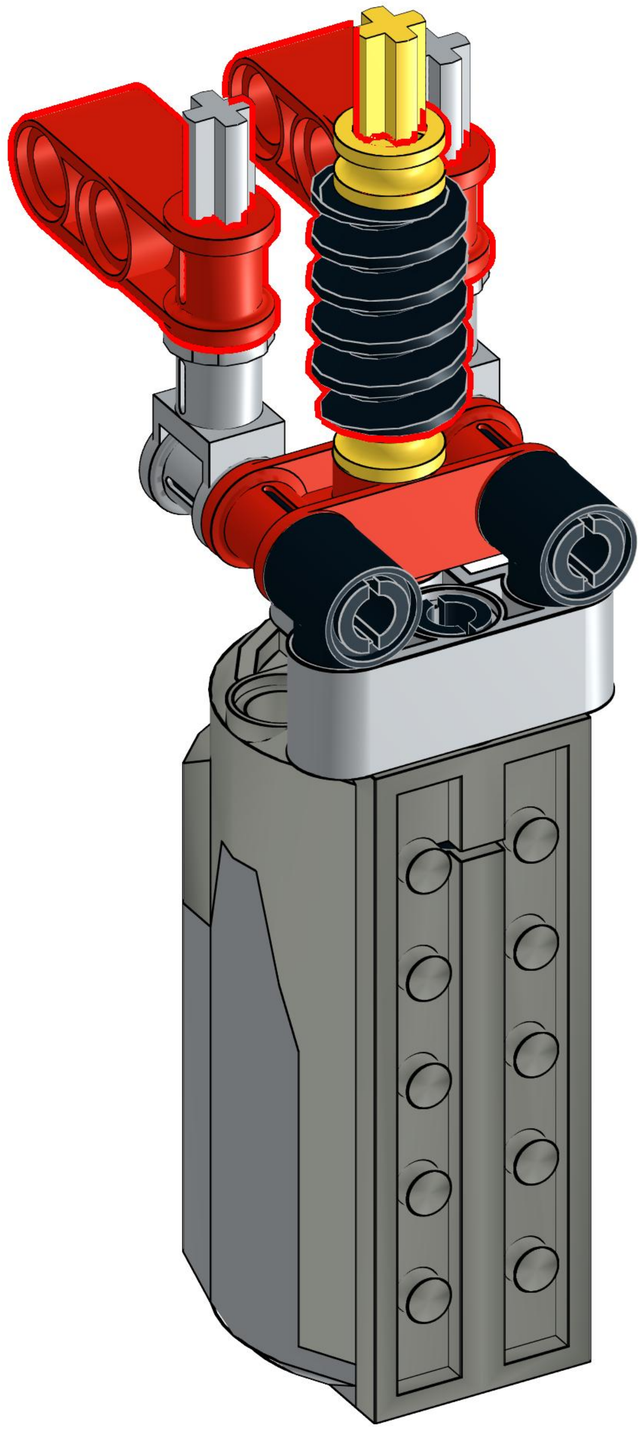

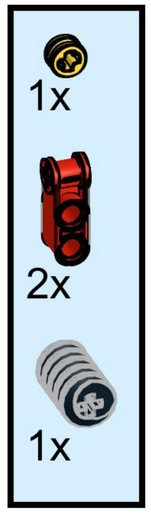

84

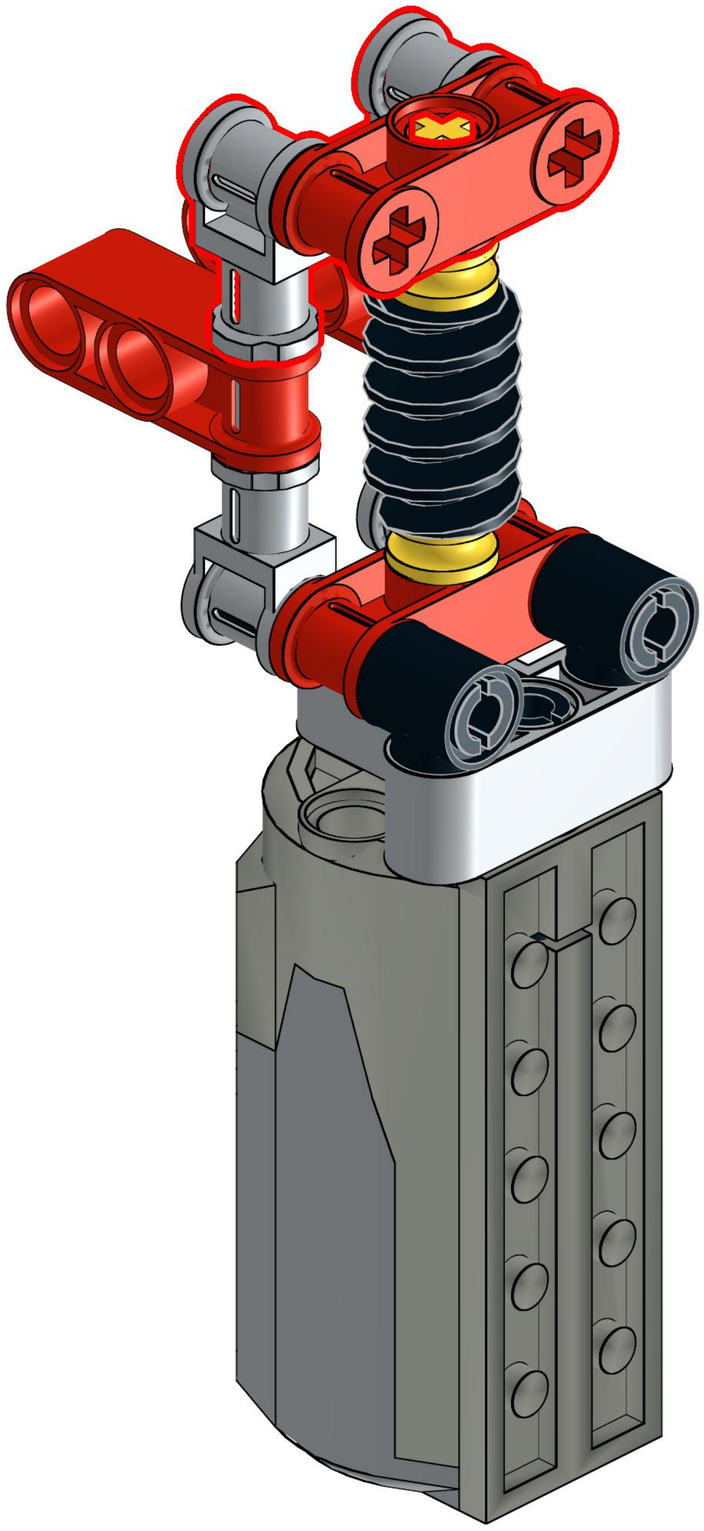

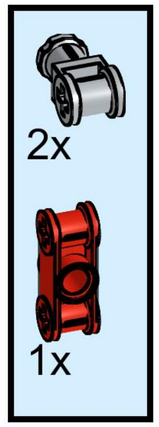

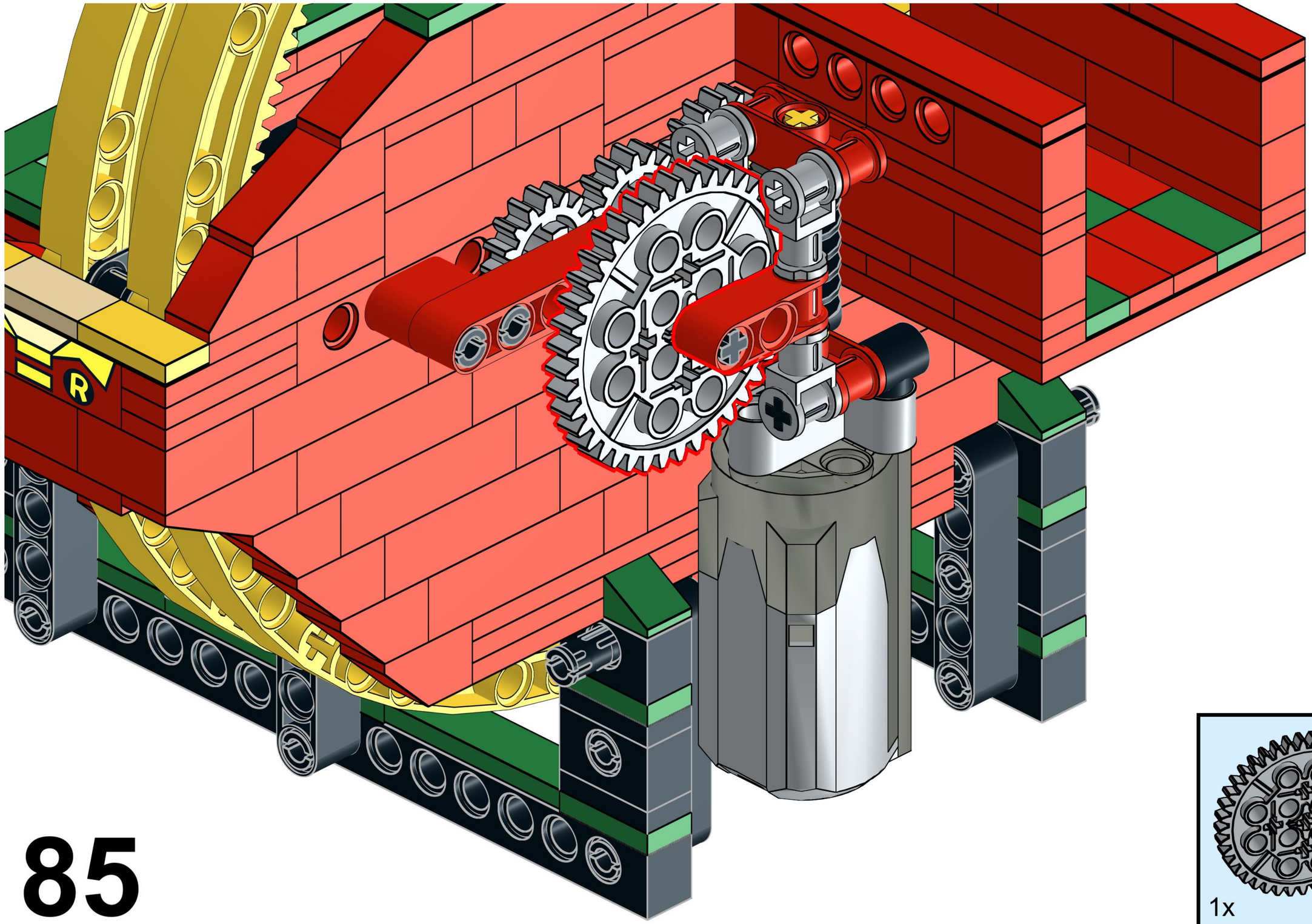
R

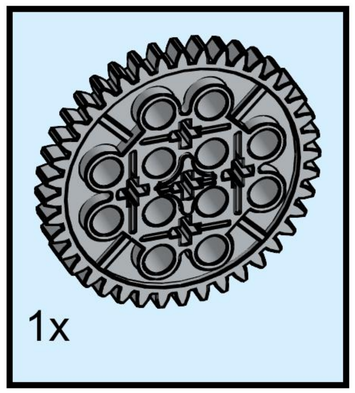
1x

86

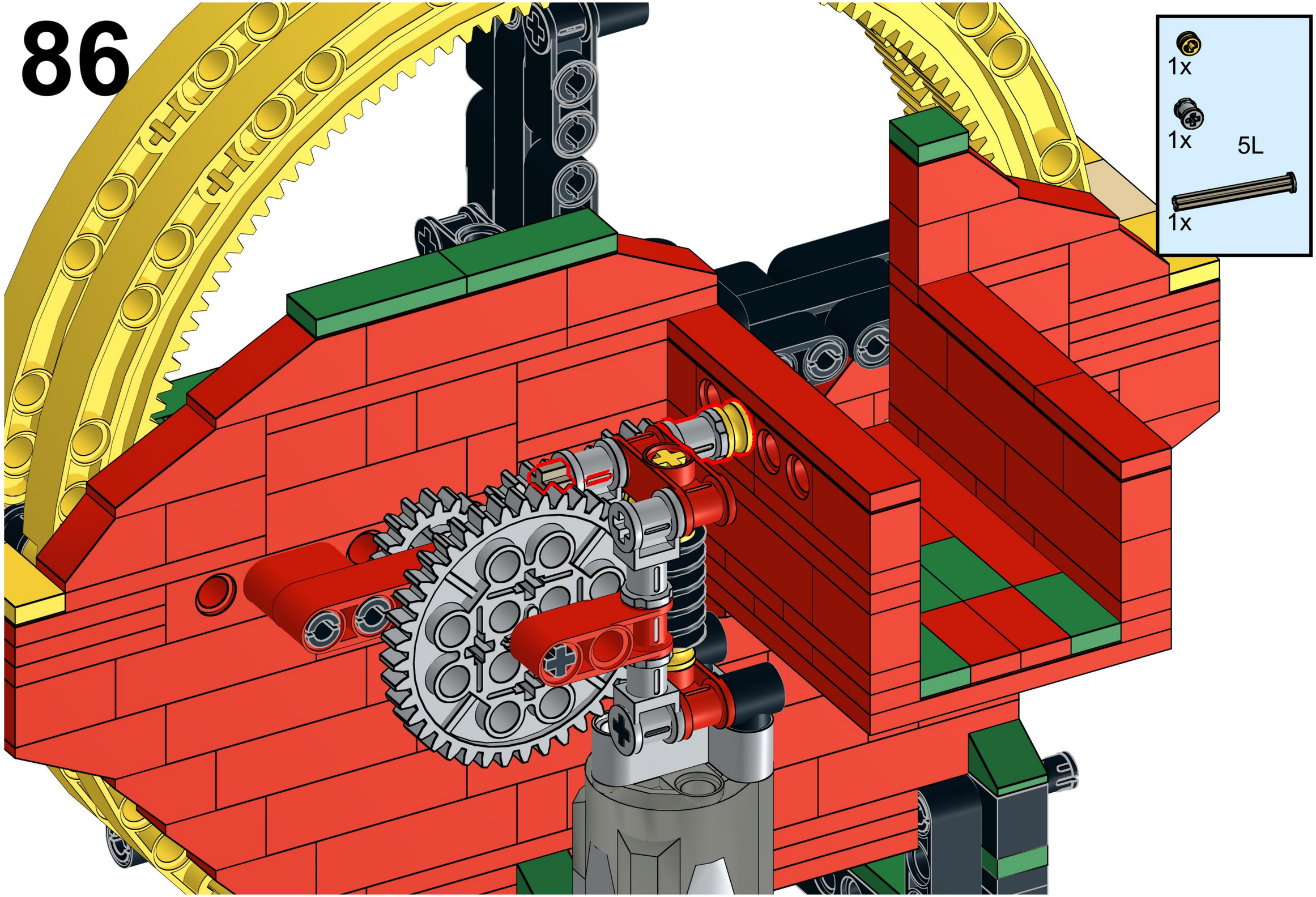

87

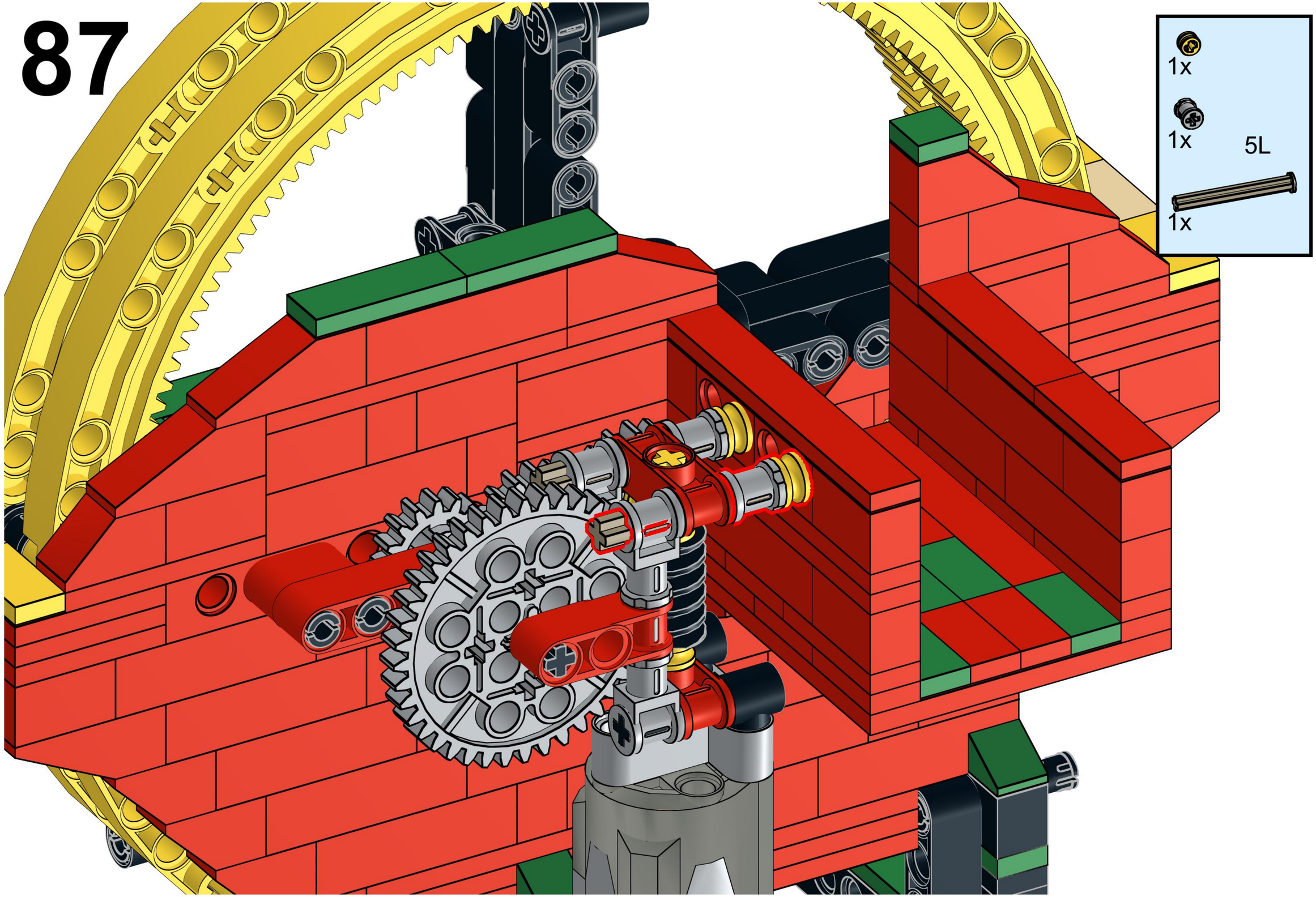

88

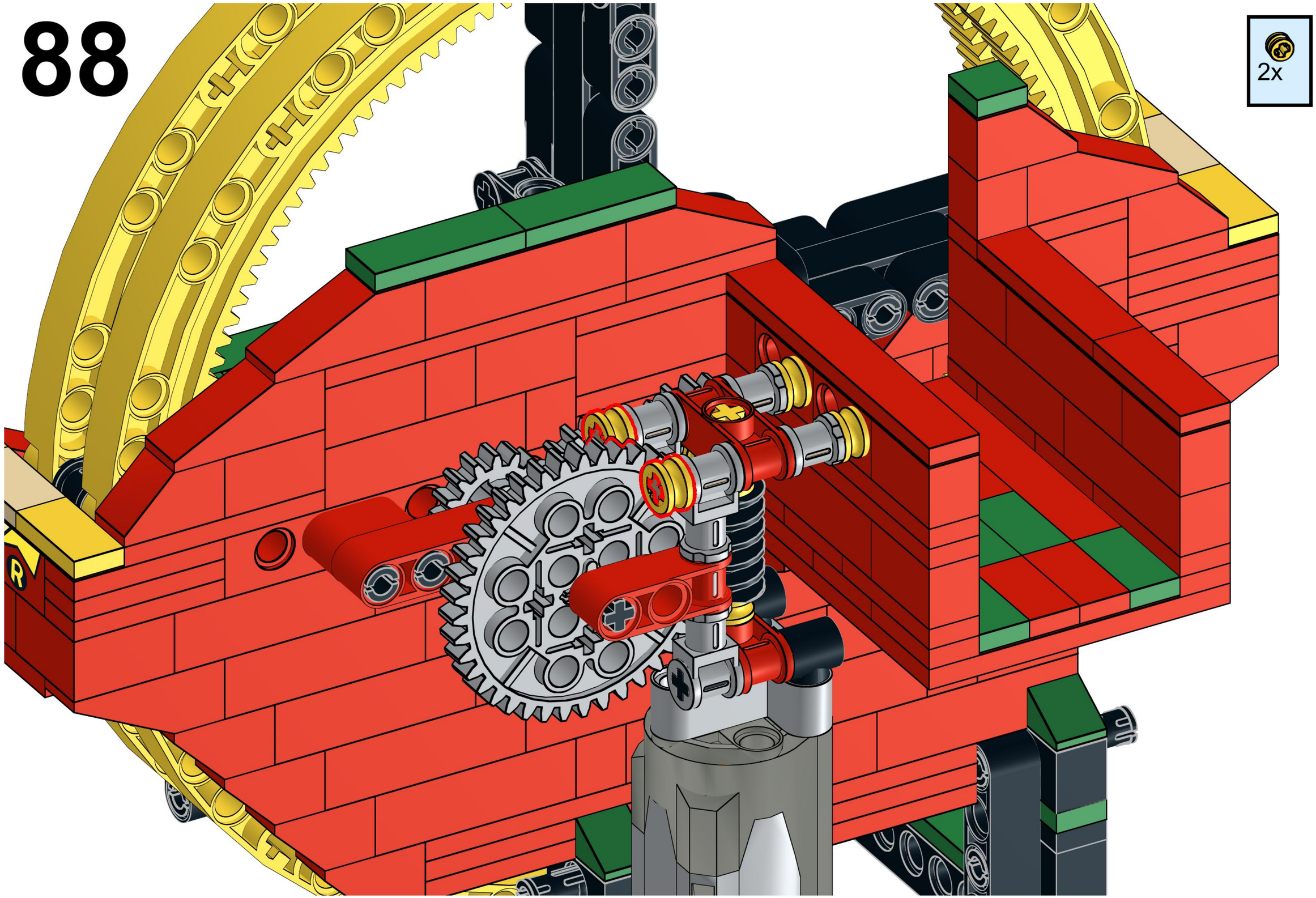

89

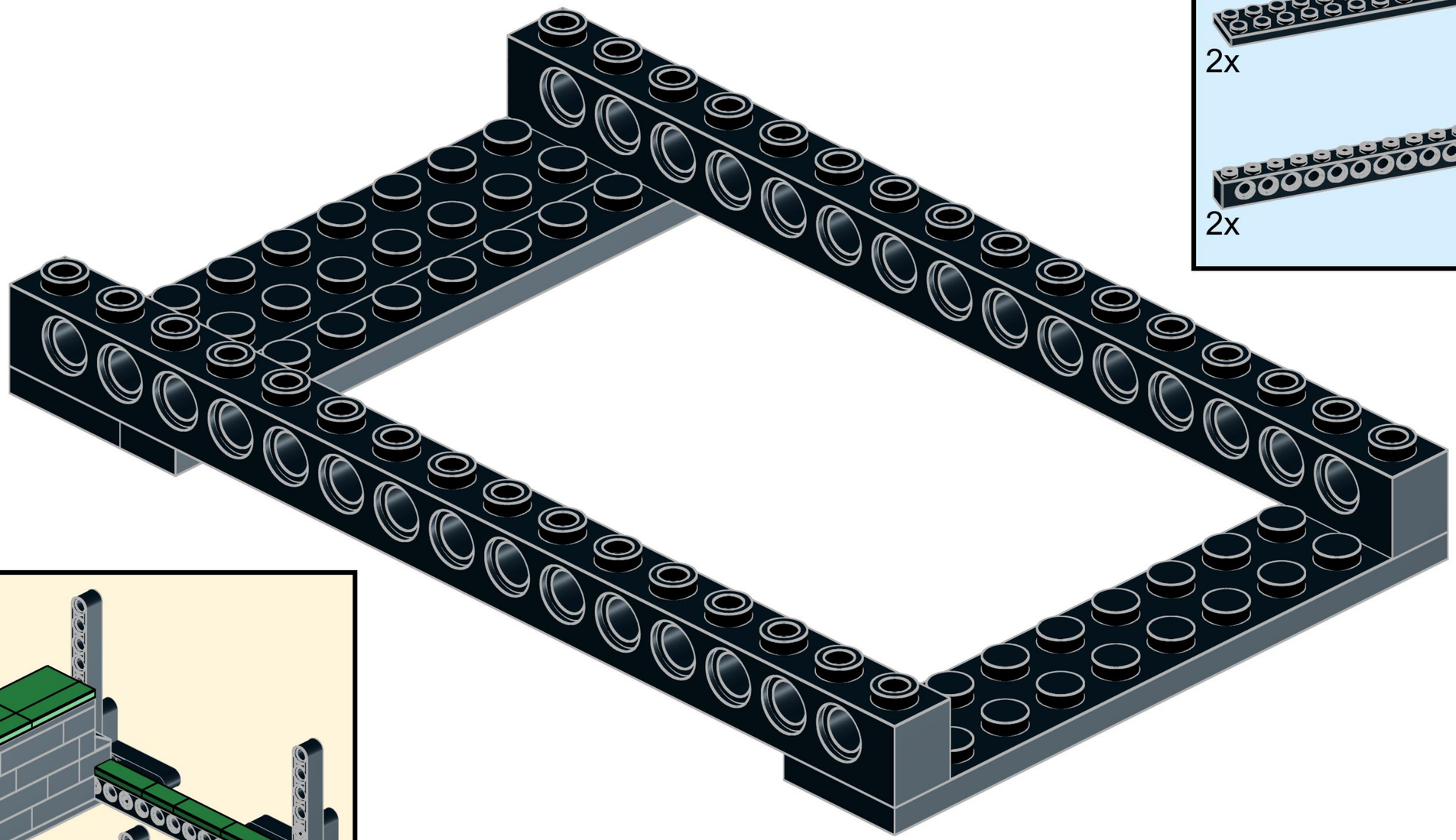

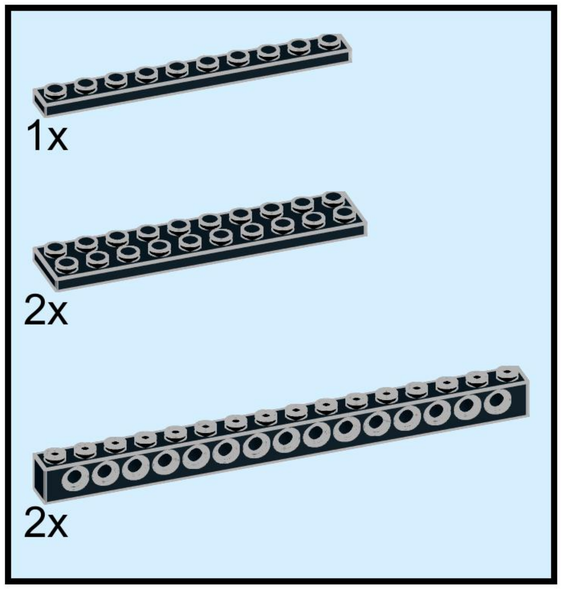

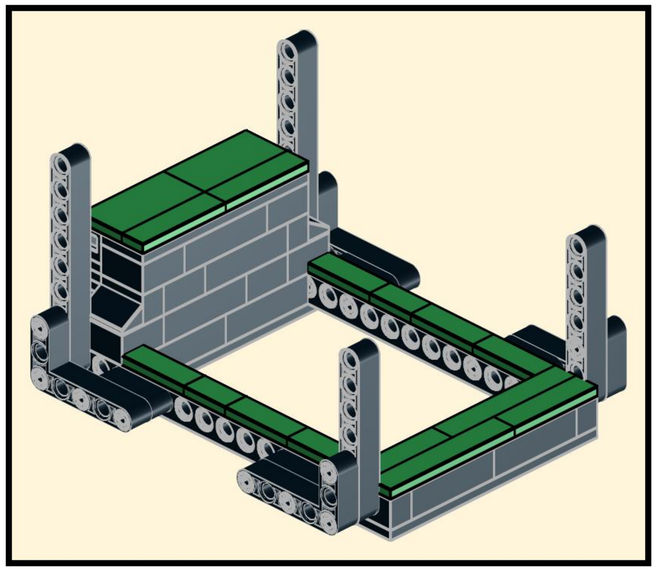

90

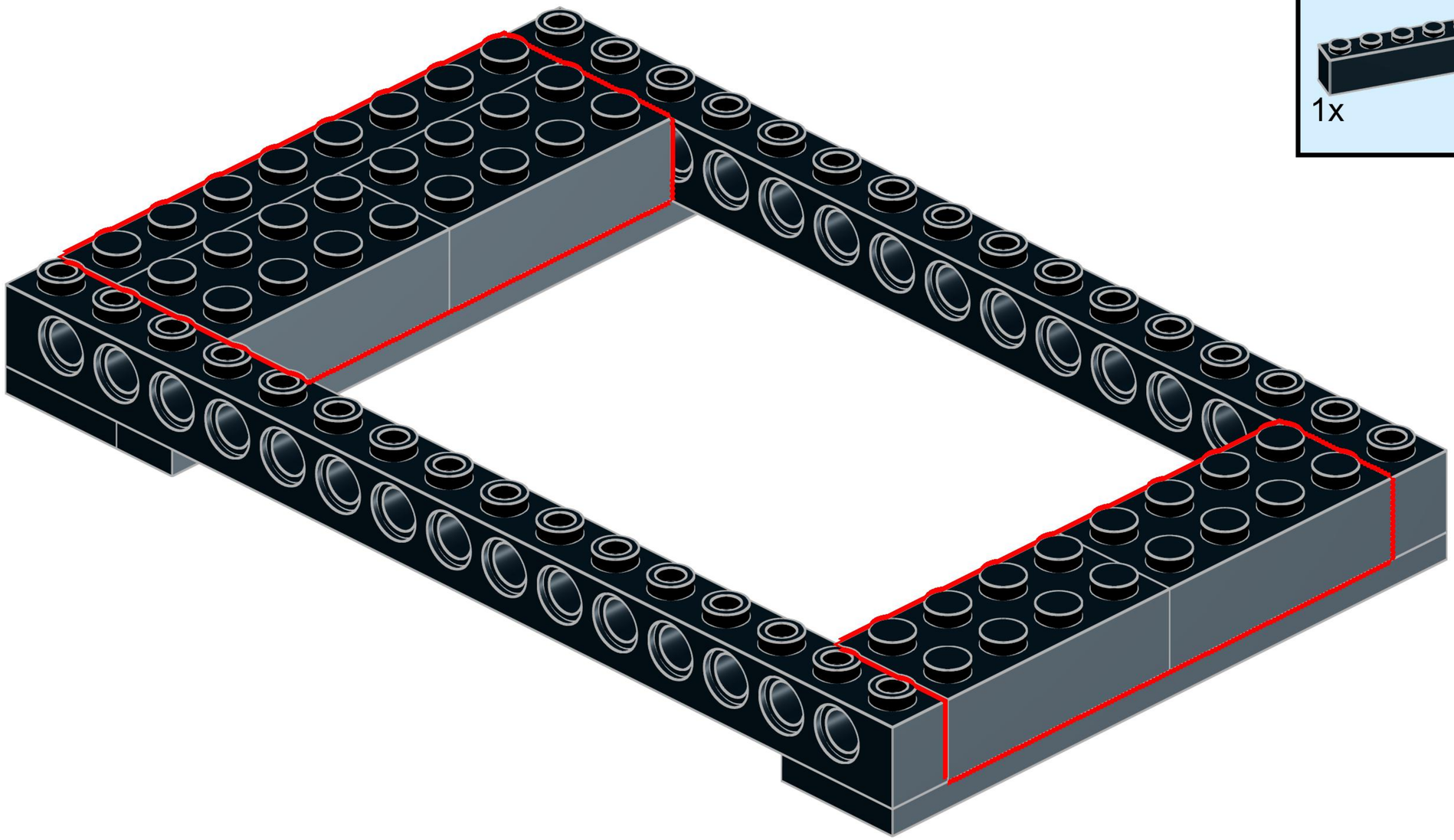

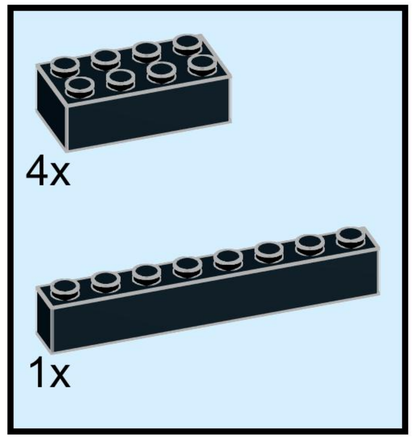

91

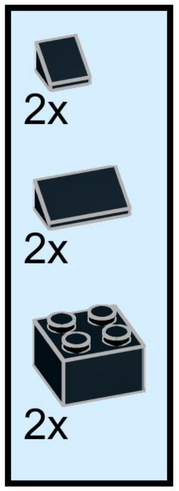

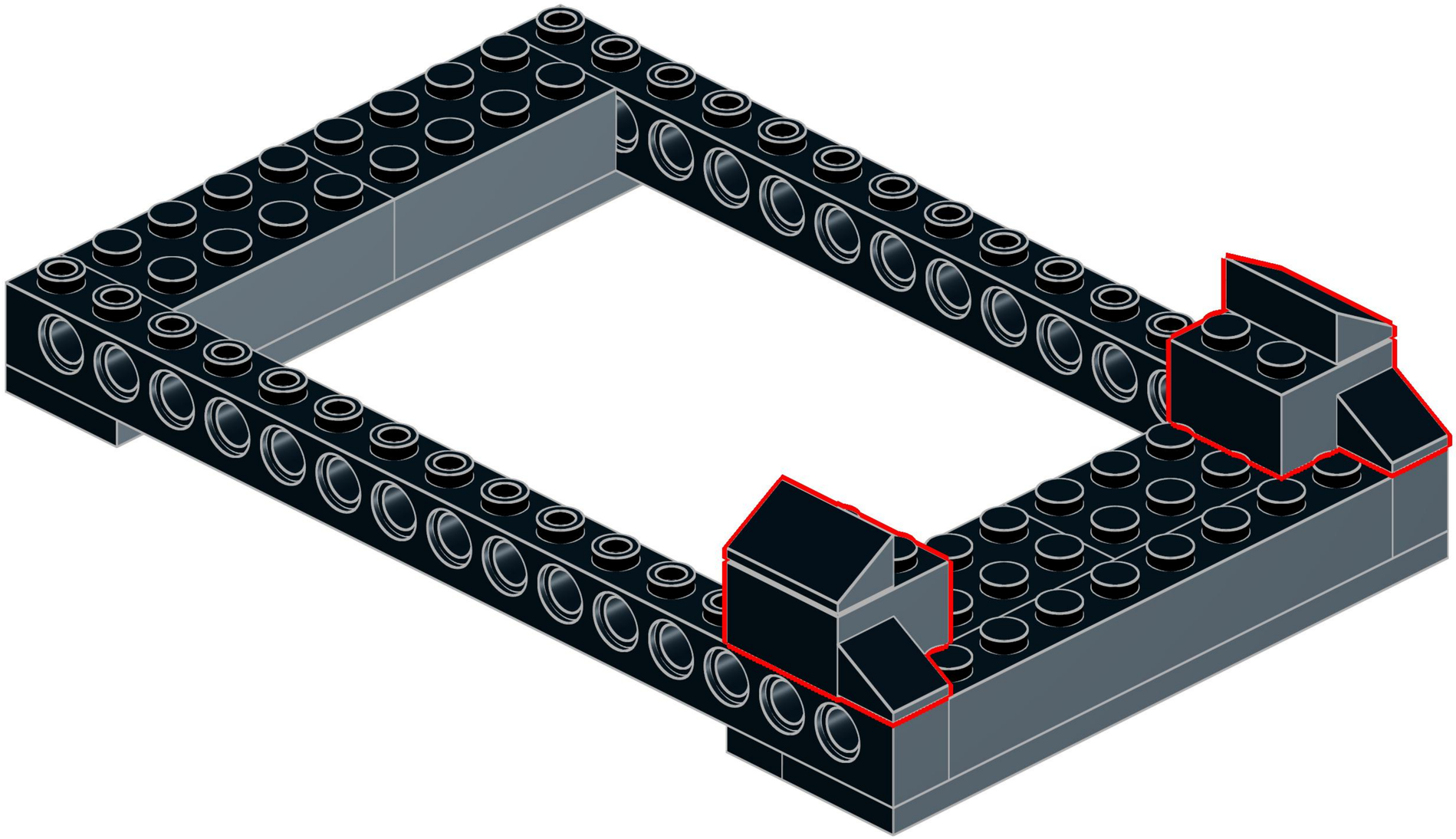

92

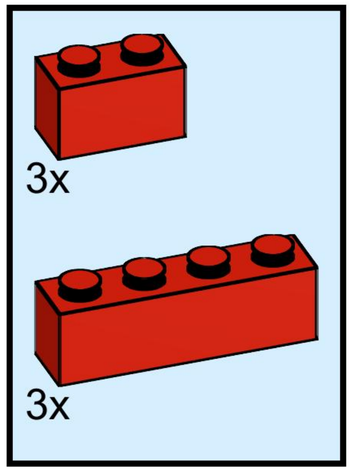

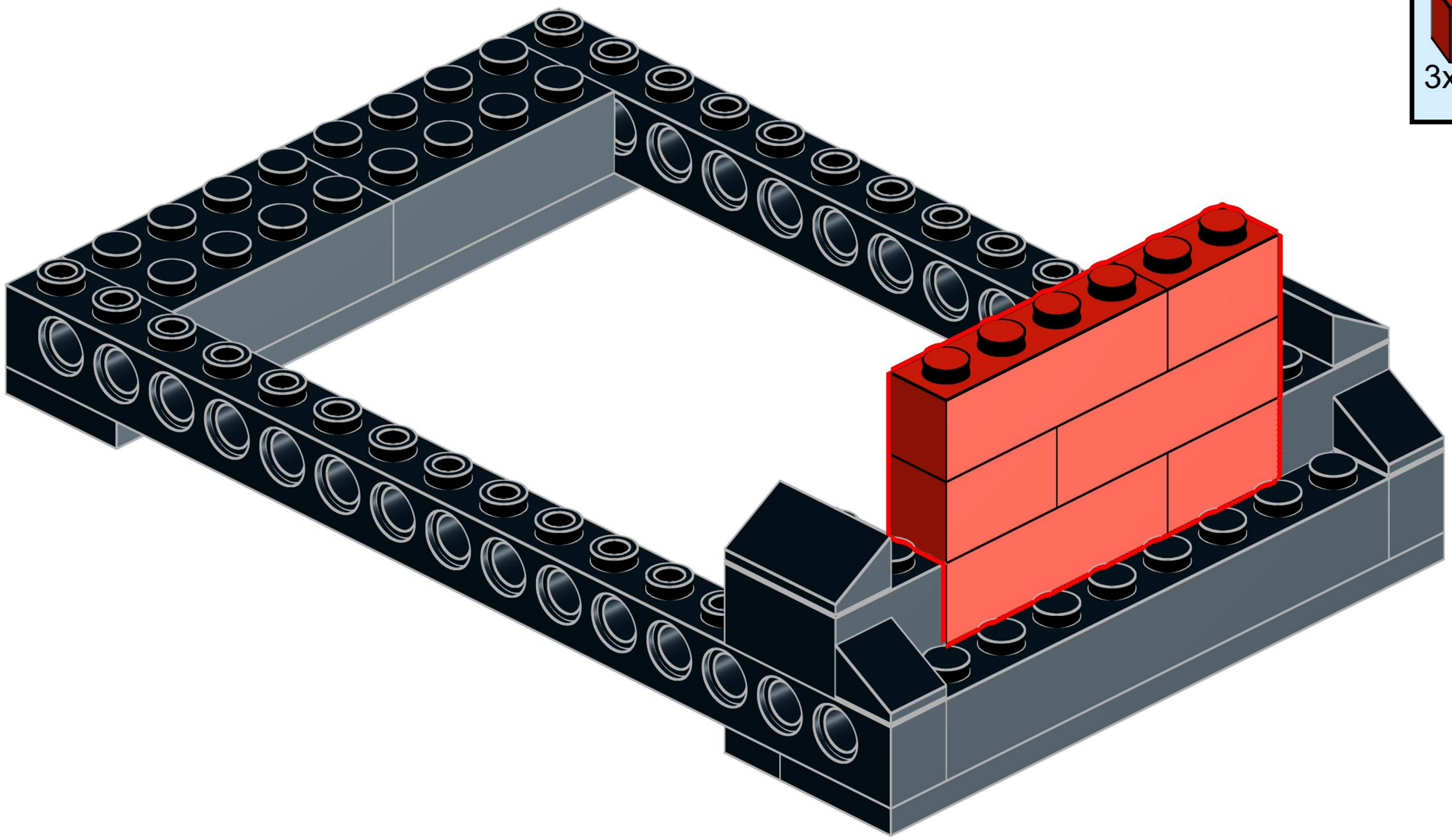

93

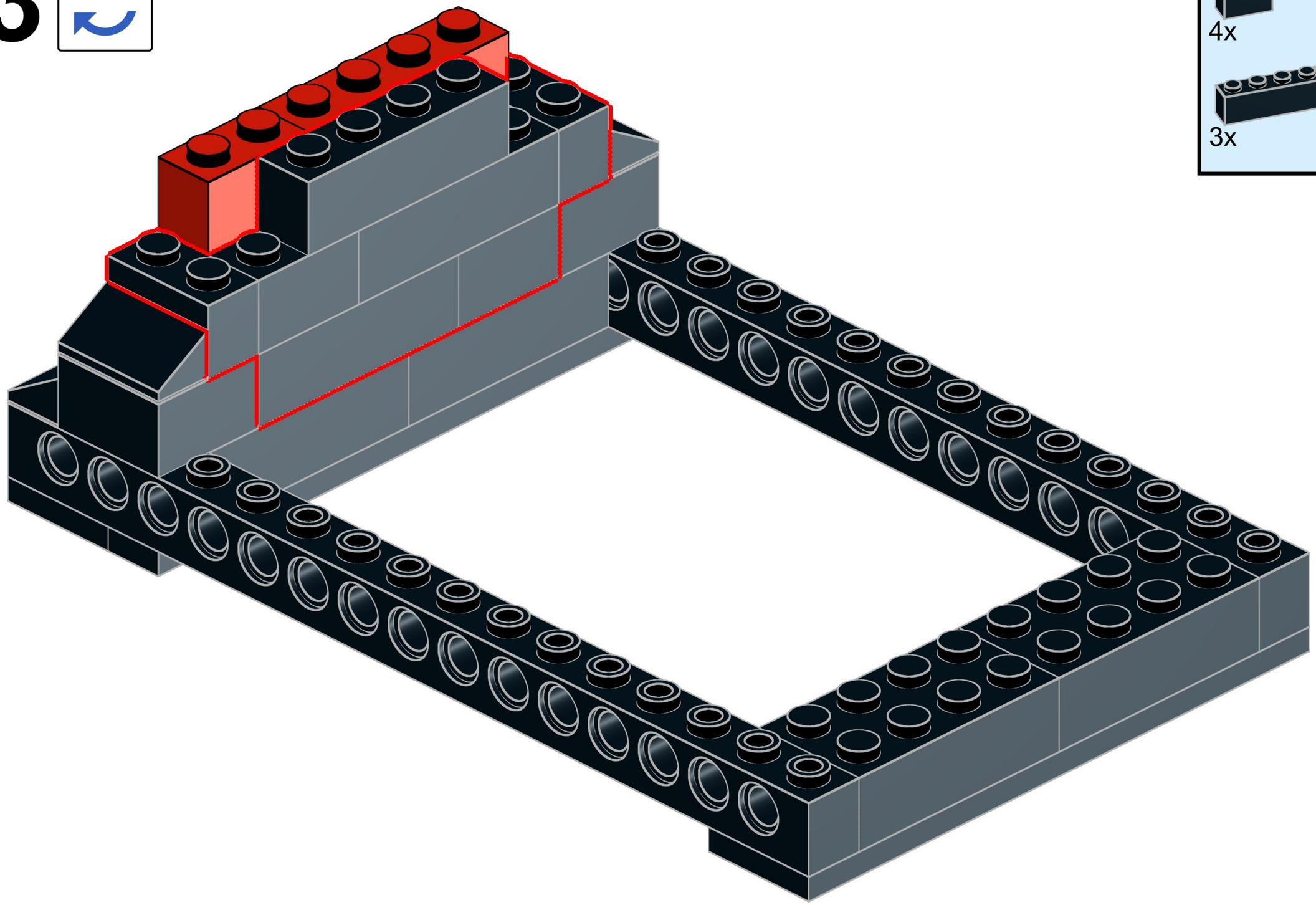

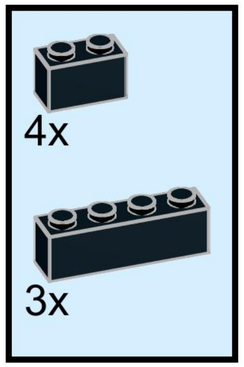

94

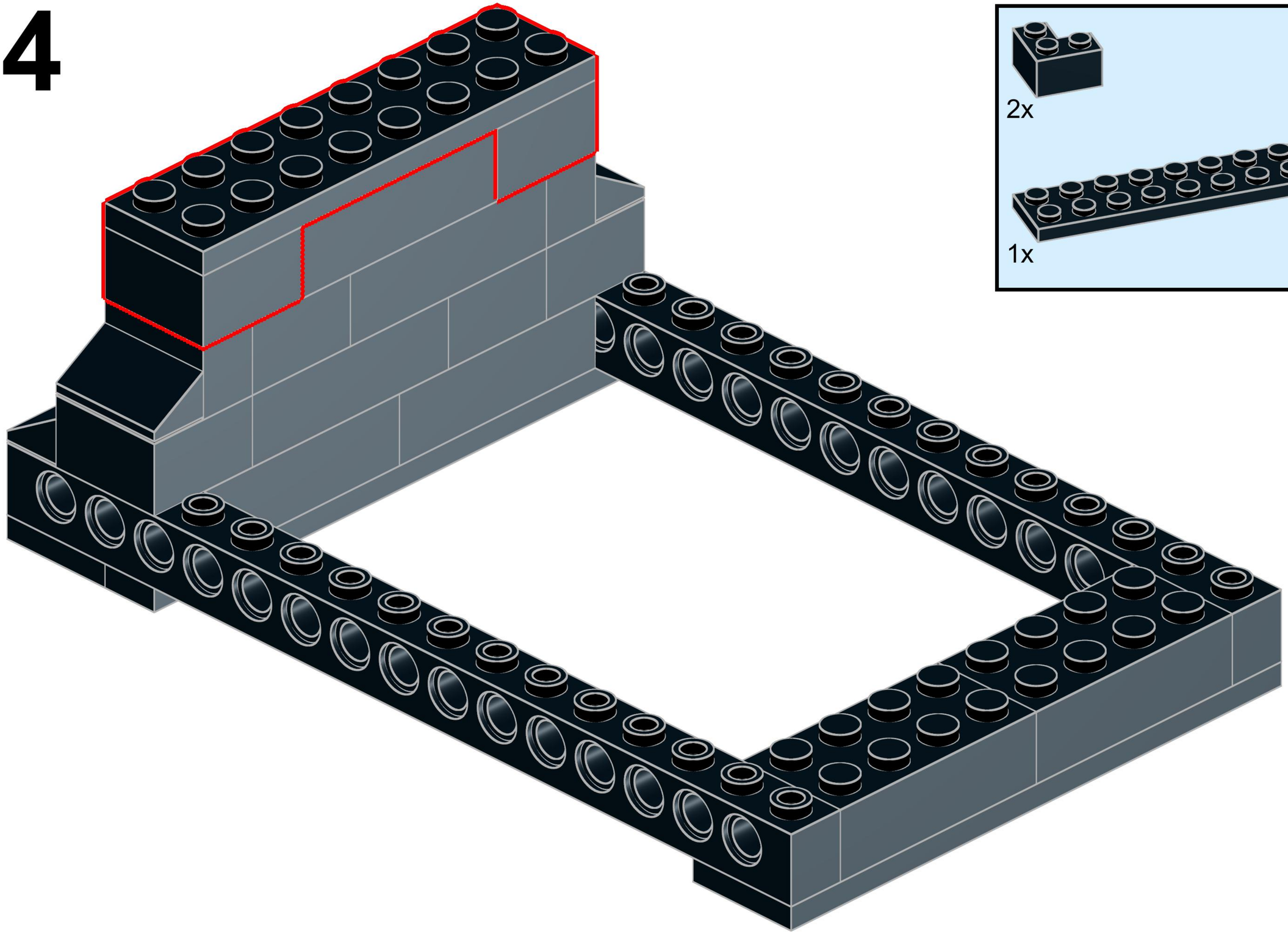

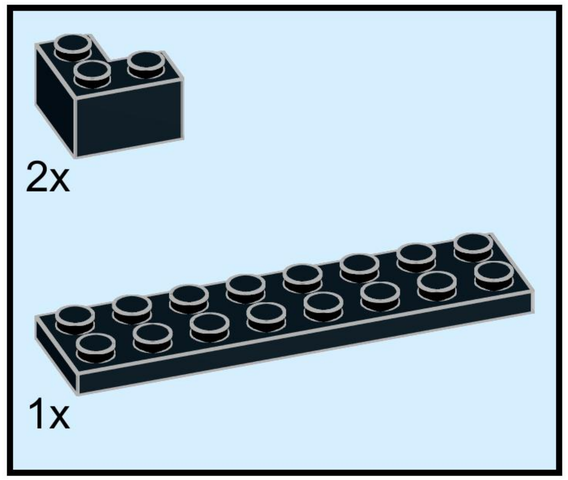

95

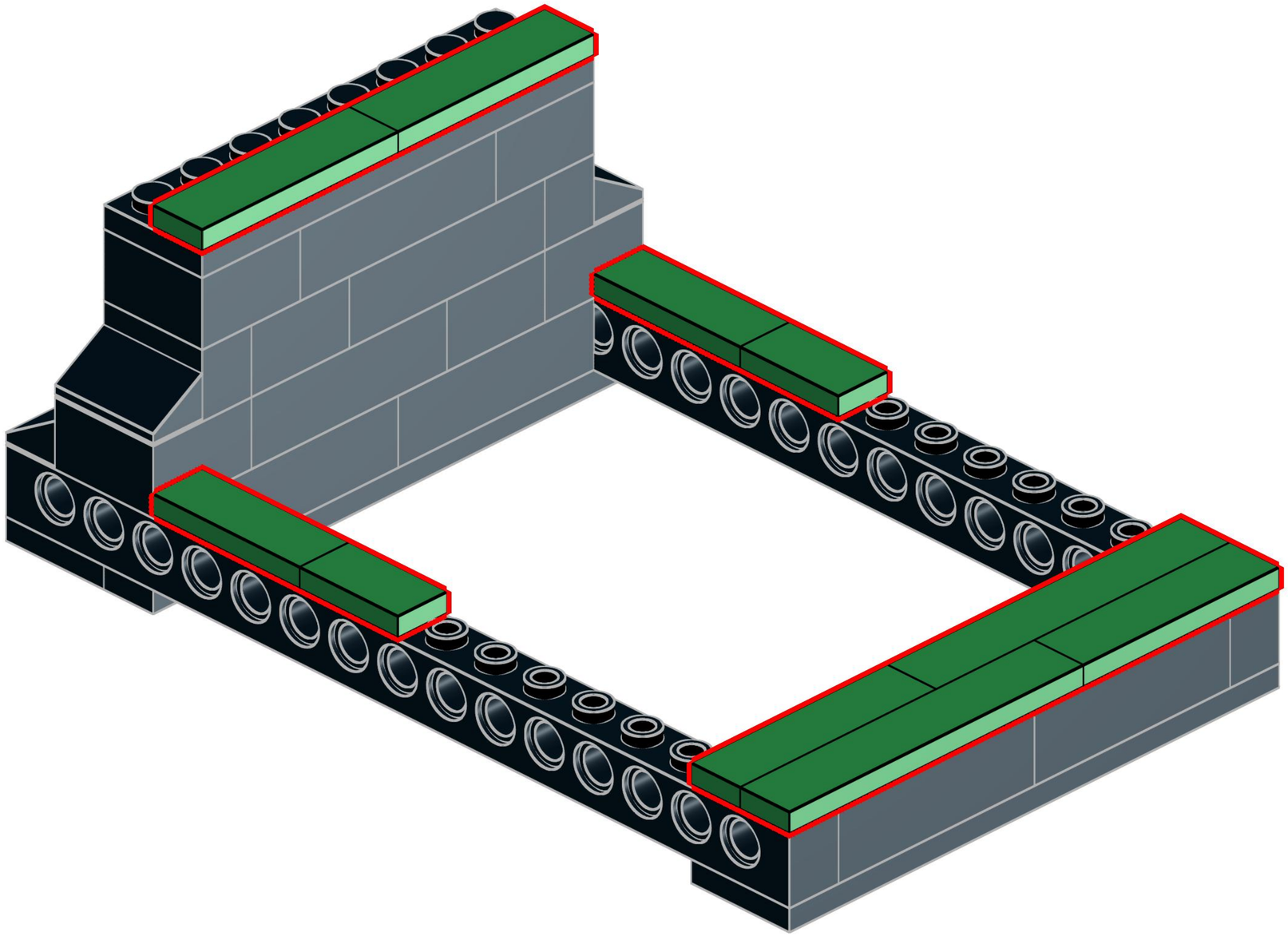

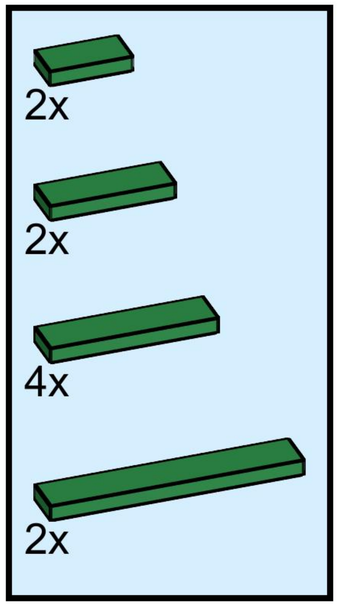

96

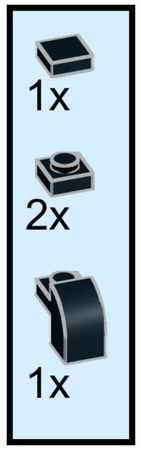

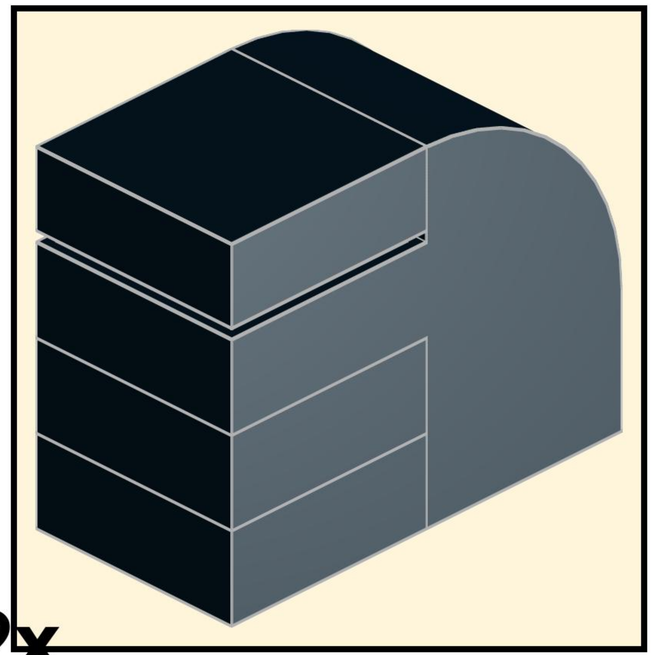

2x

97

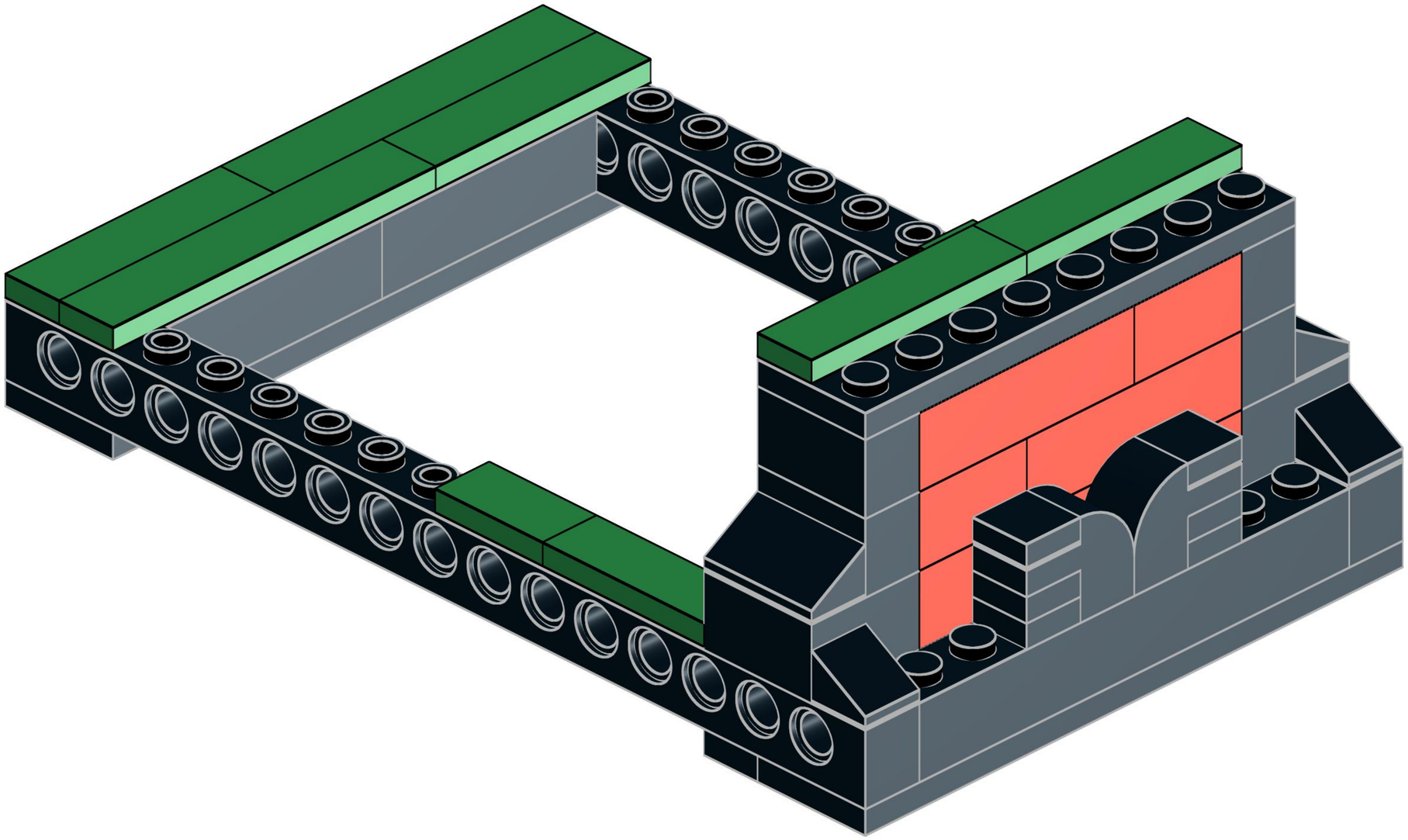

98

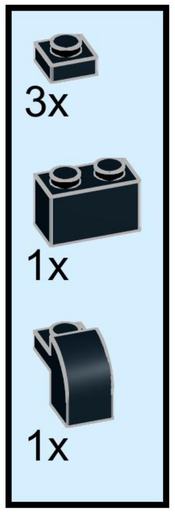

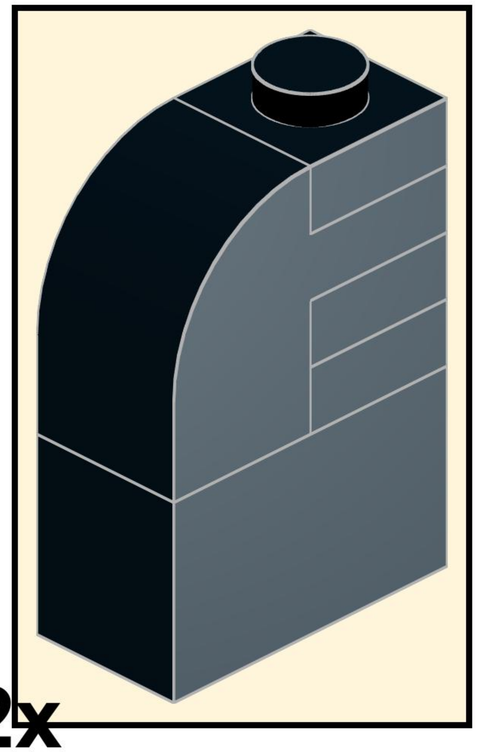

2x

99

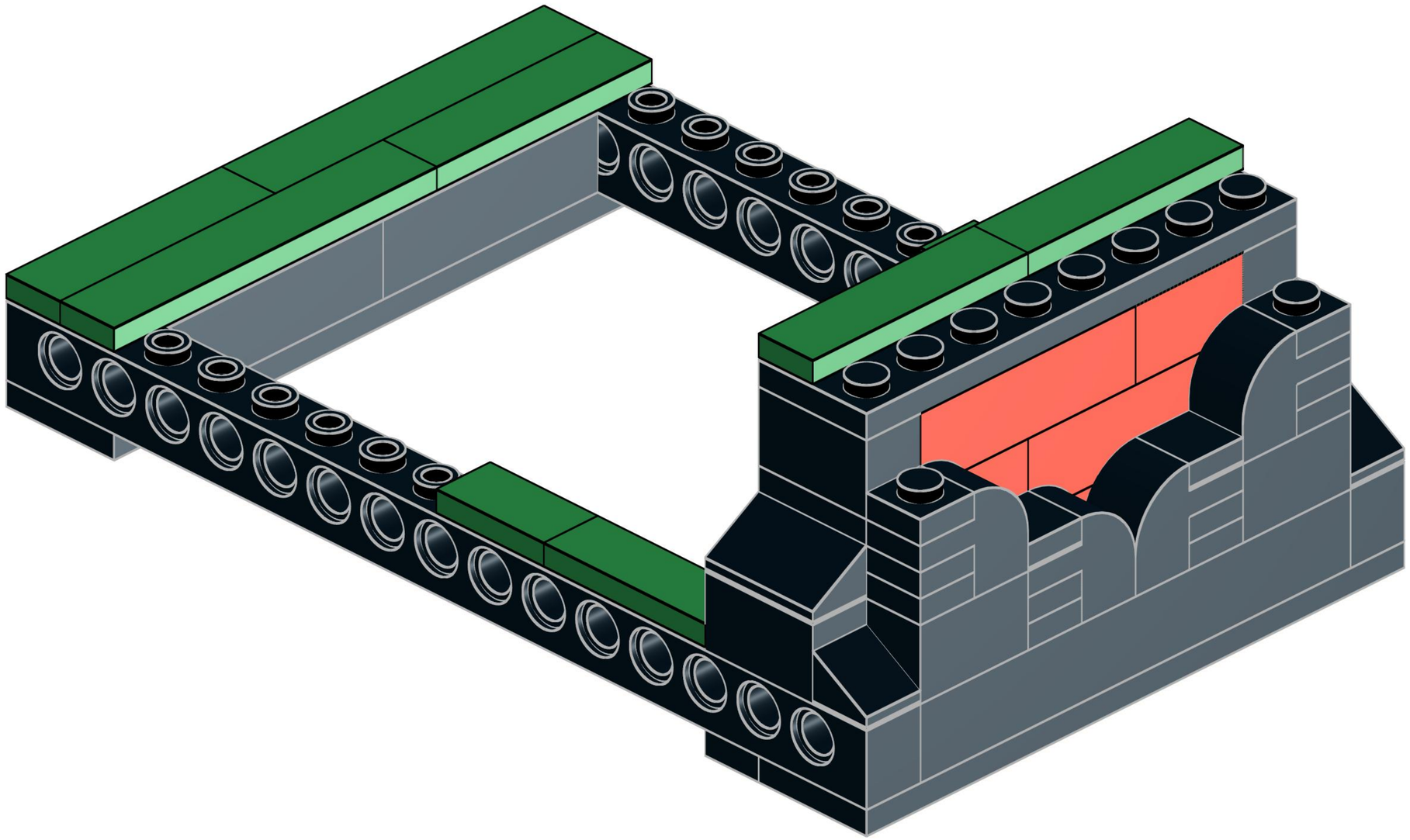

100

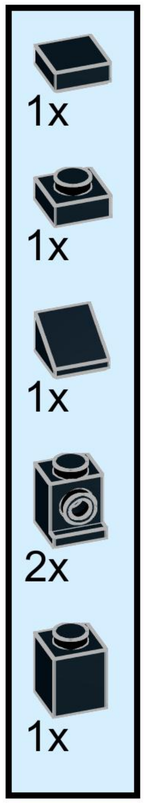

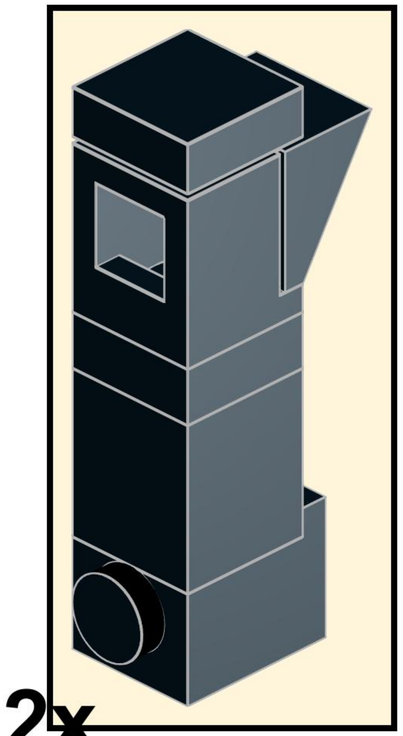

2x

101

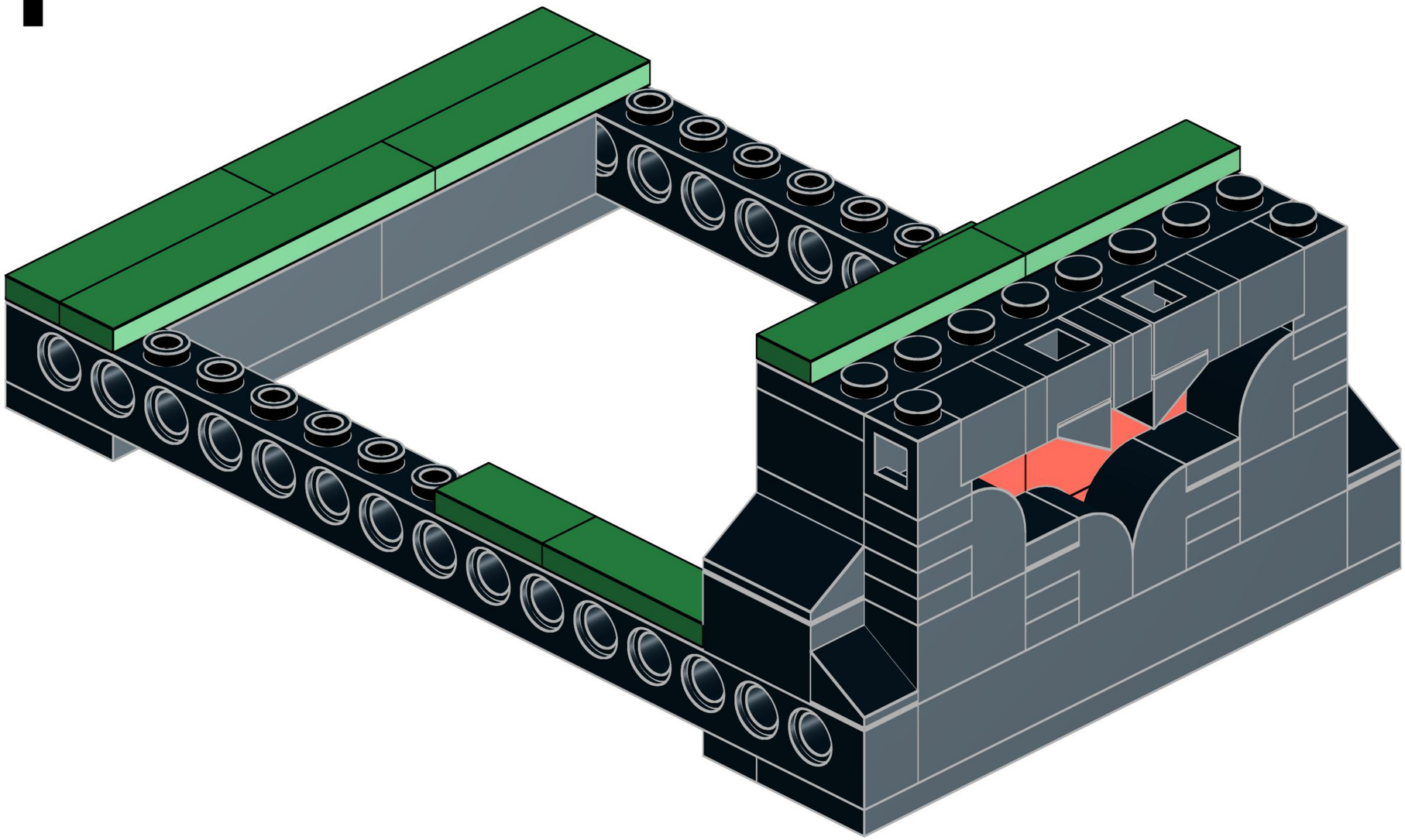

102

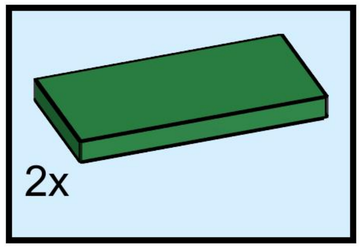

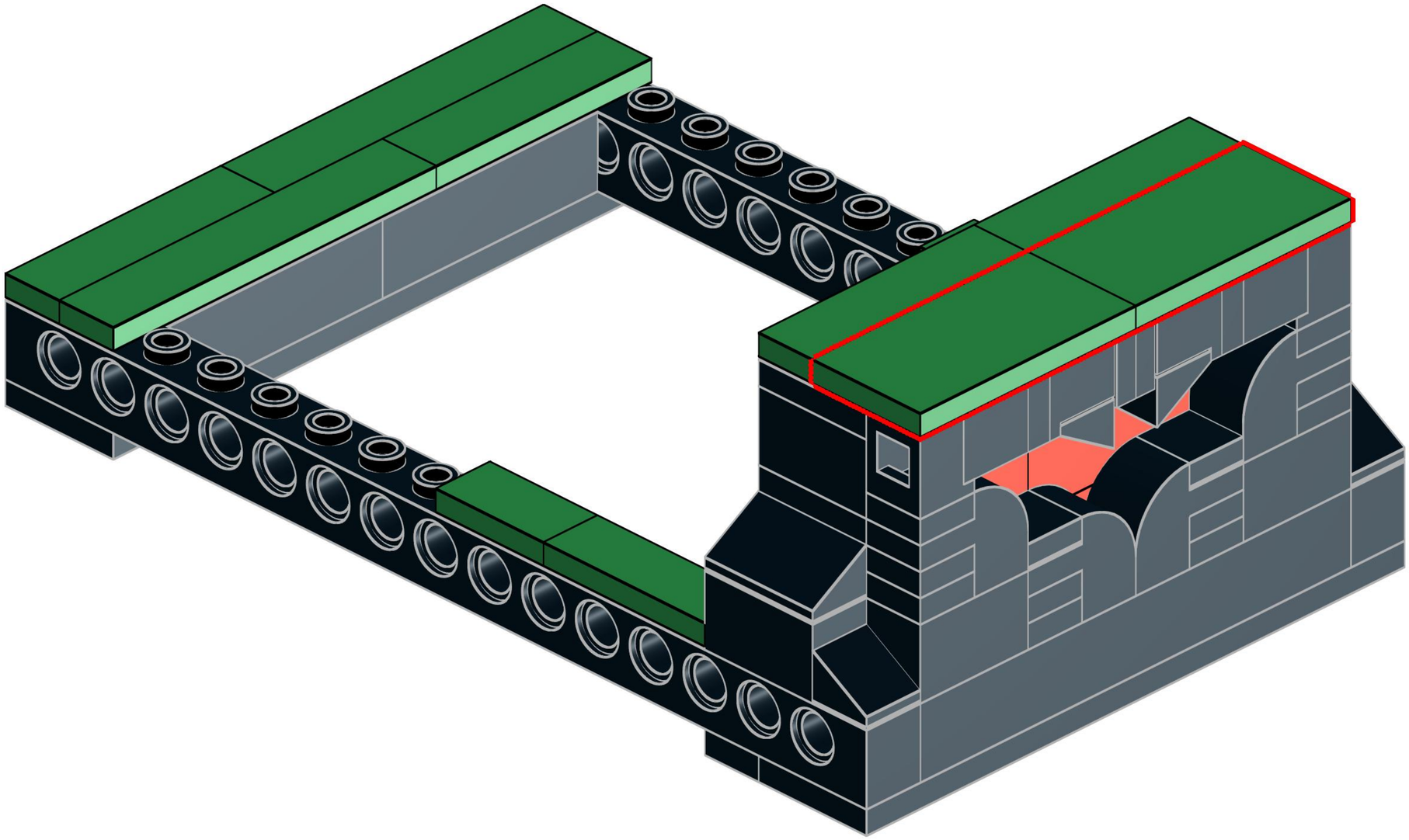

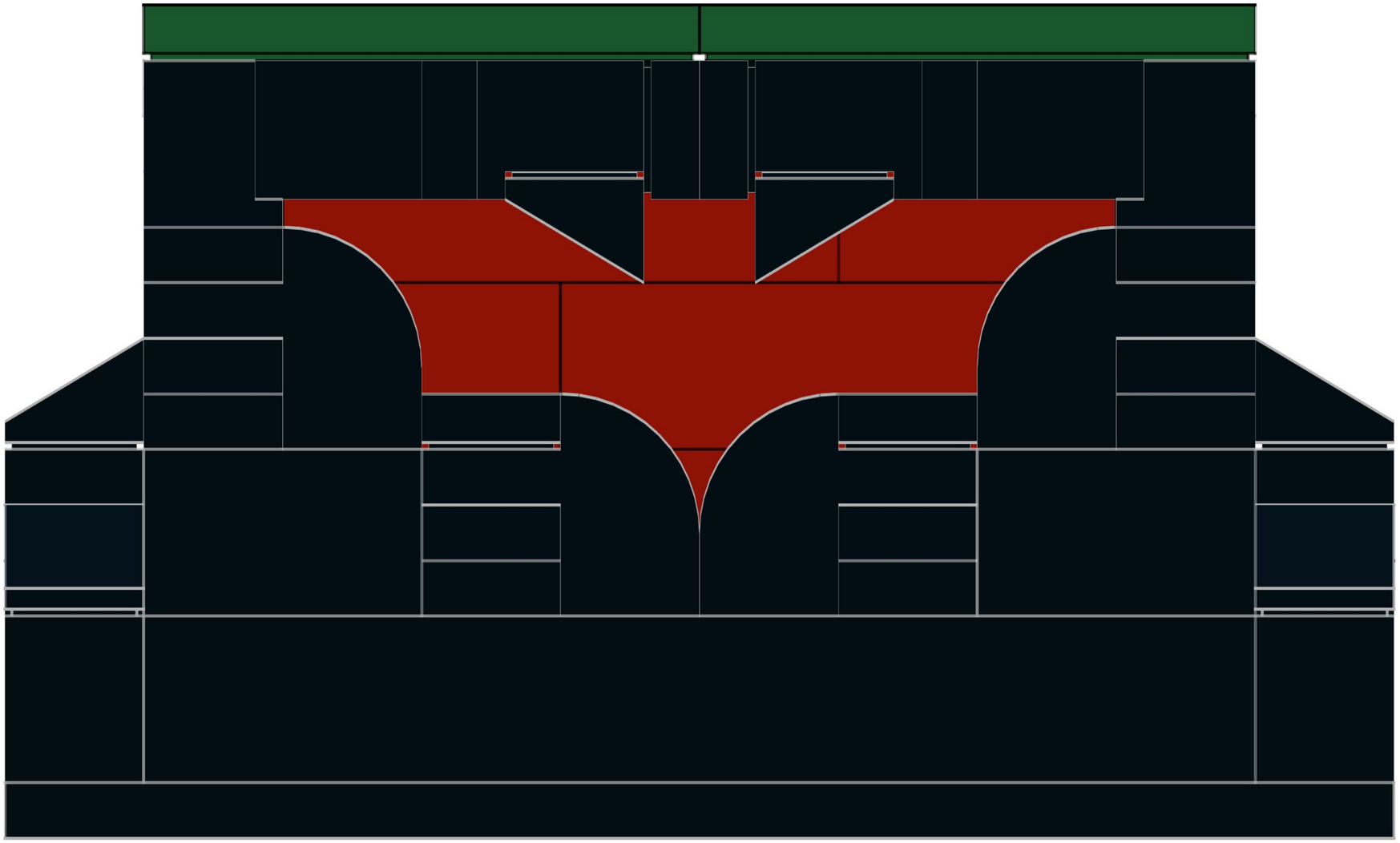

Na Na Na Na Na Na Na Na Na Na Na Na Na Na Na Na ... Robin

104

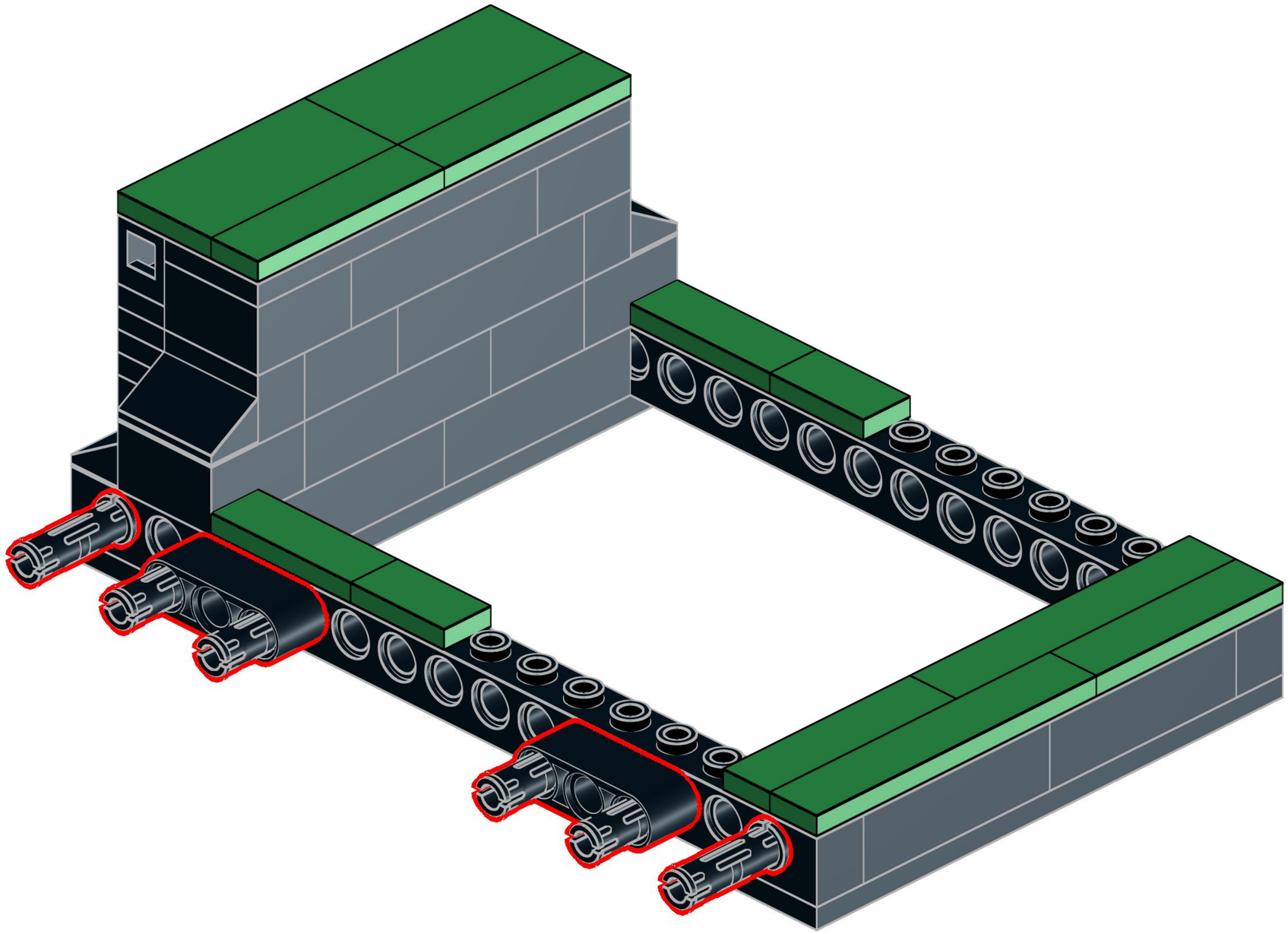

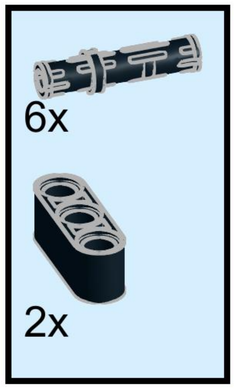

105

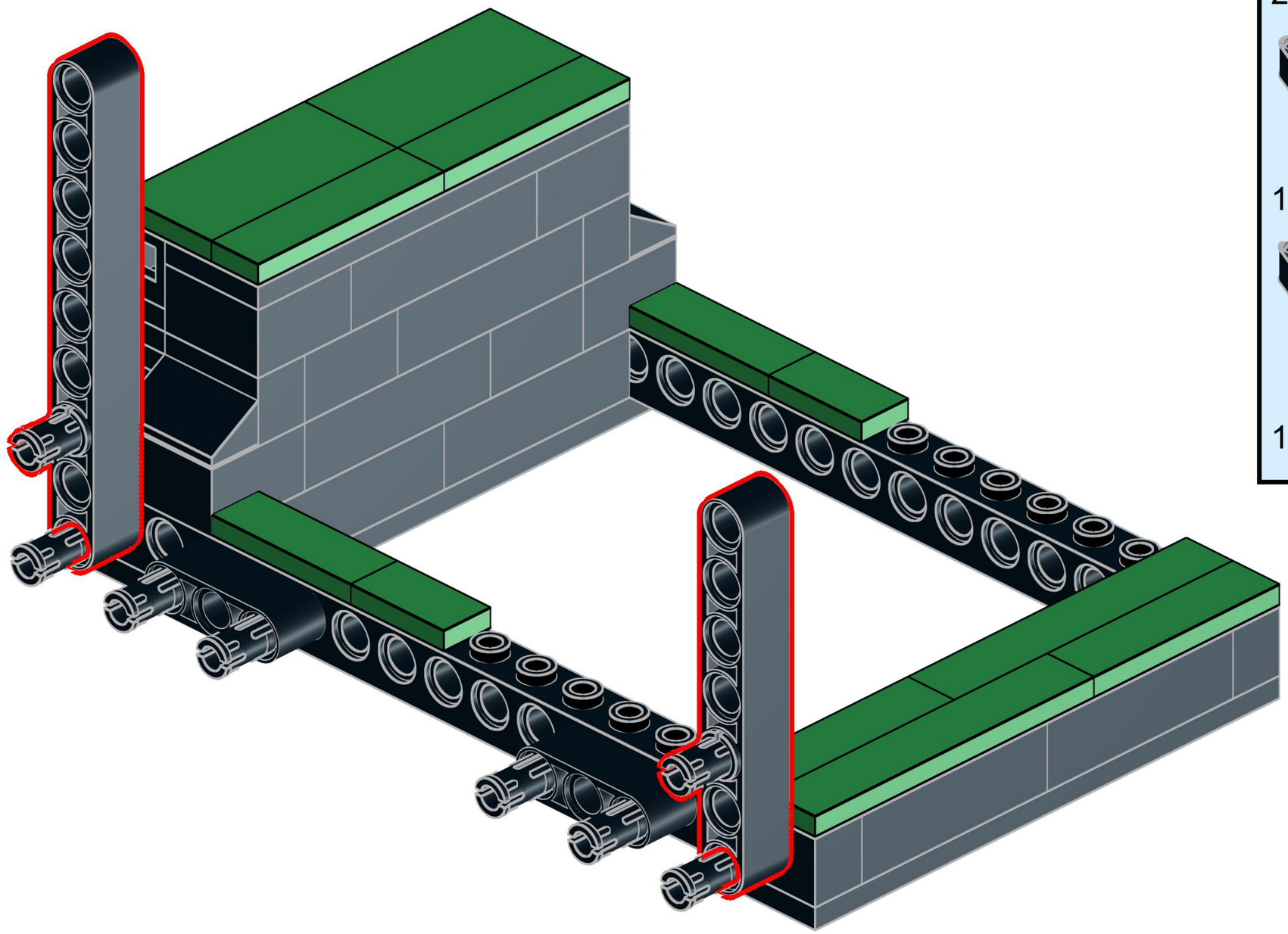

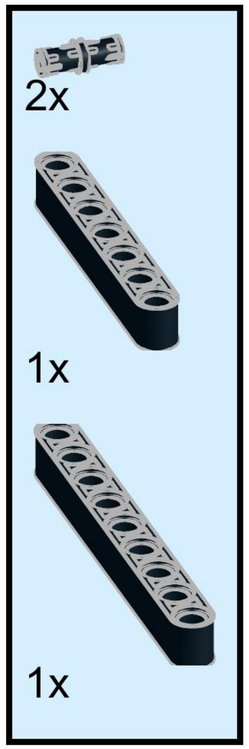

106

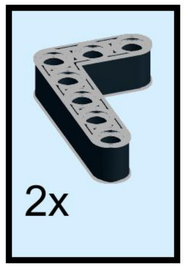

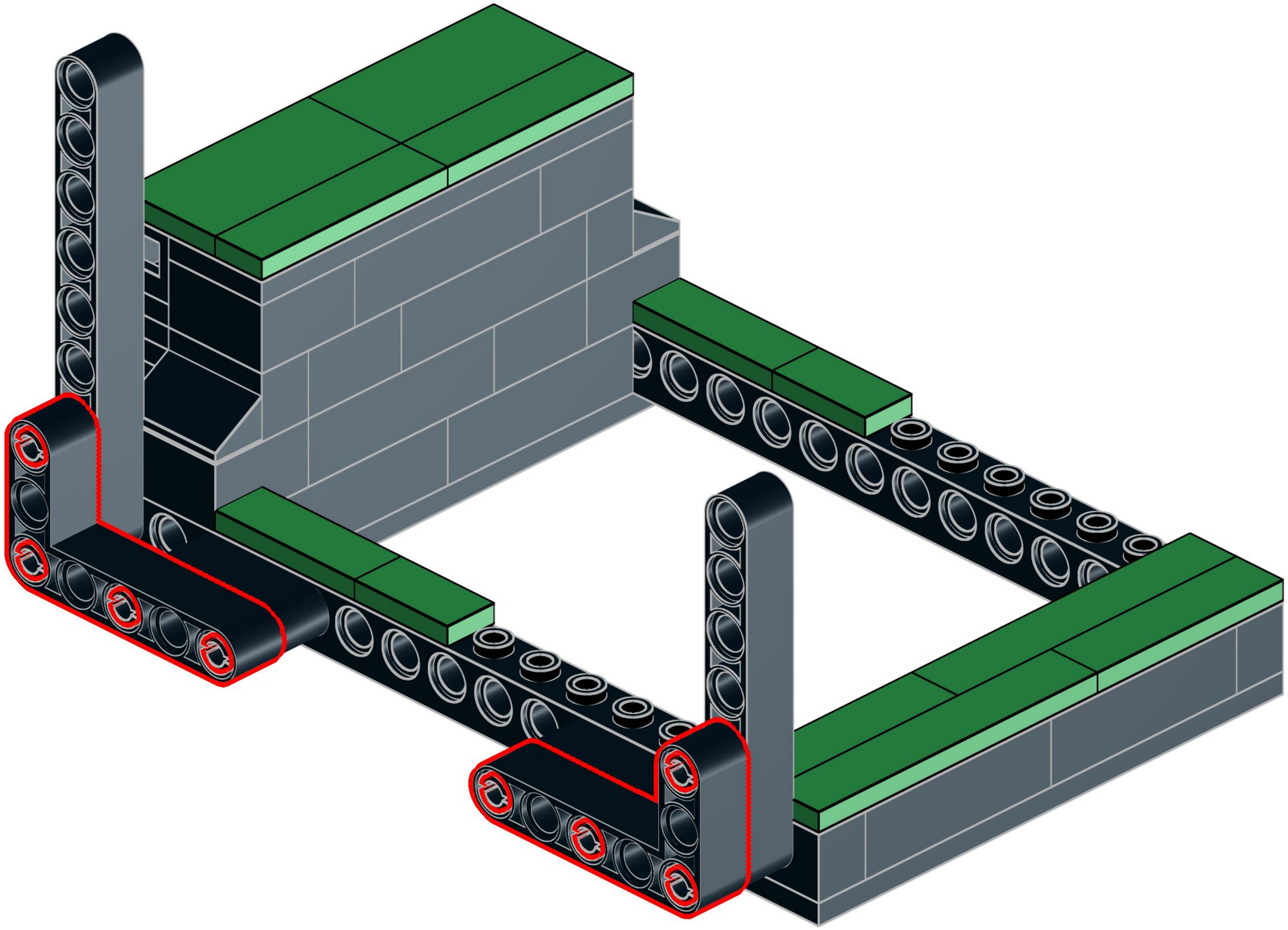

107

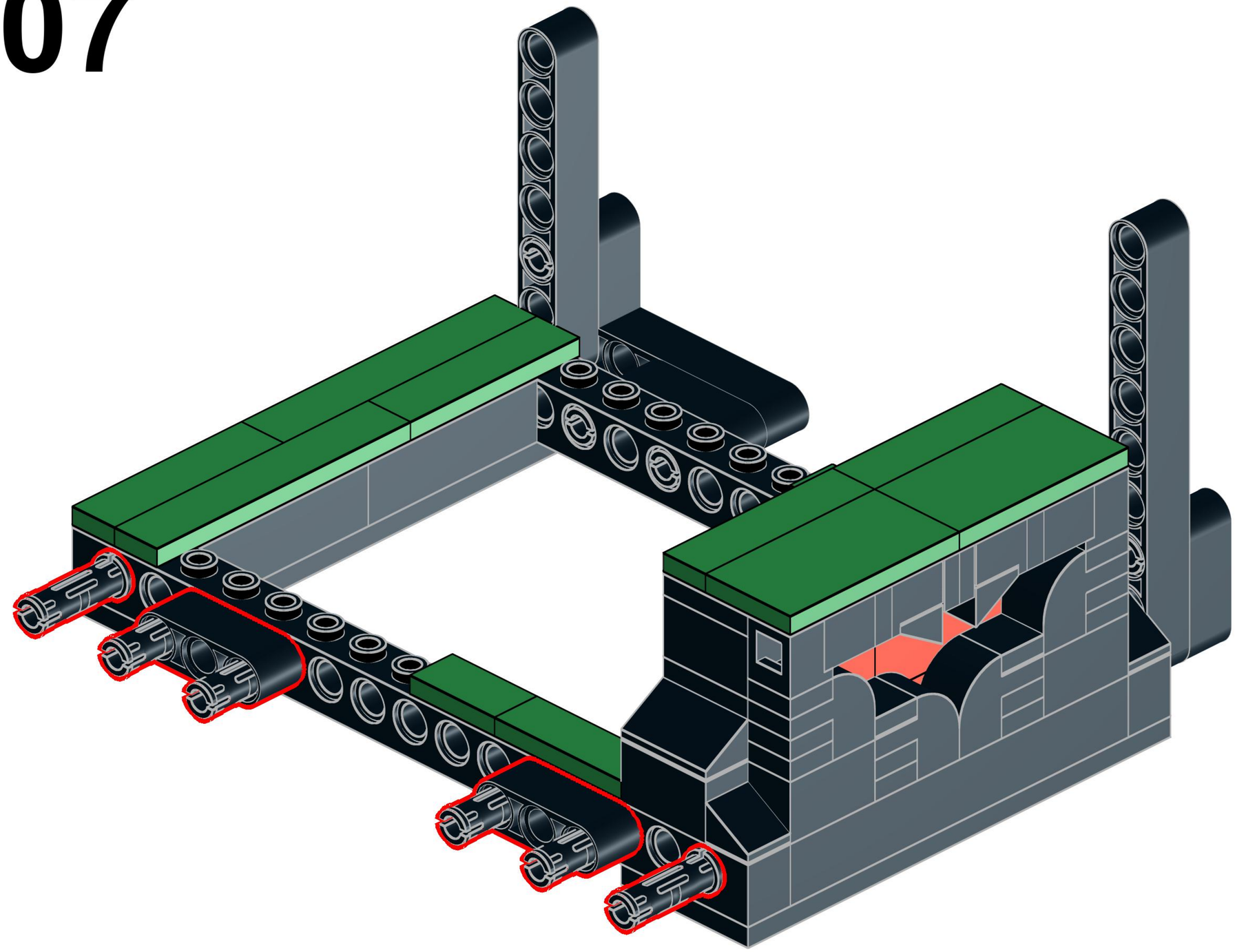

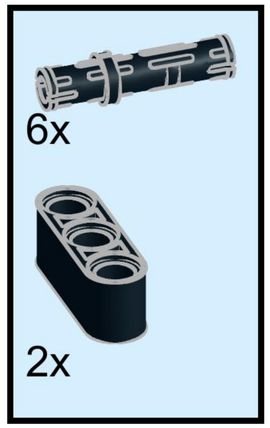

108

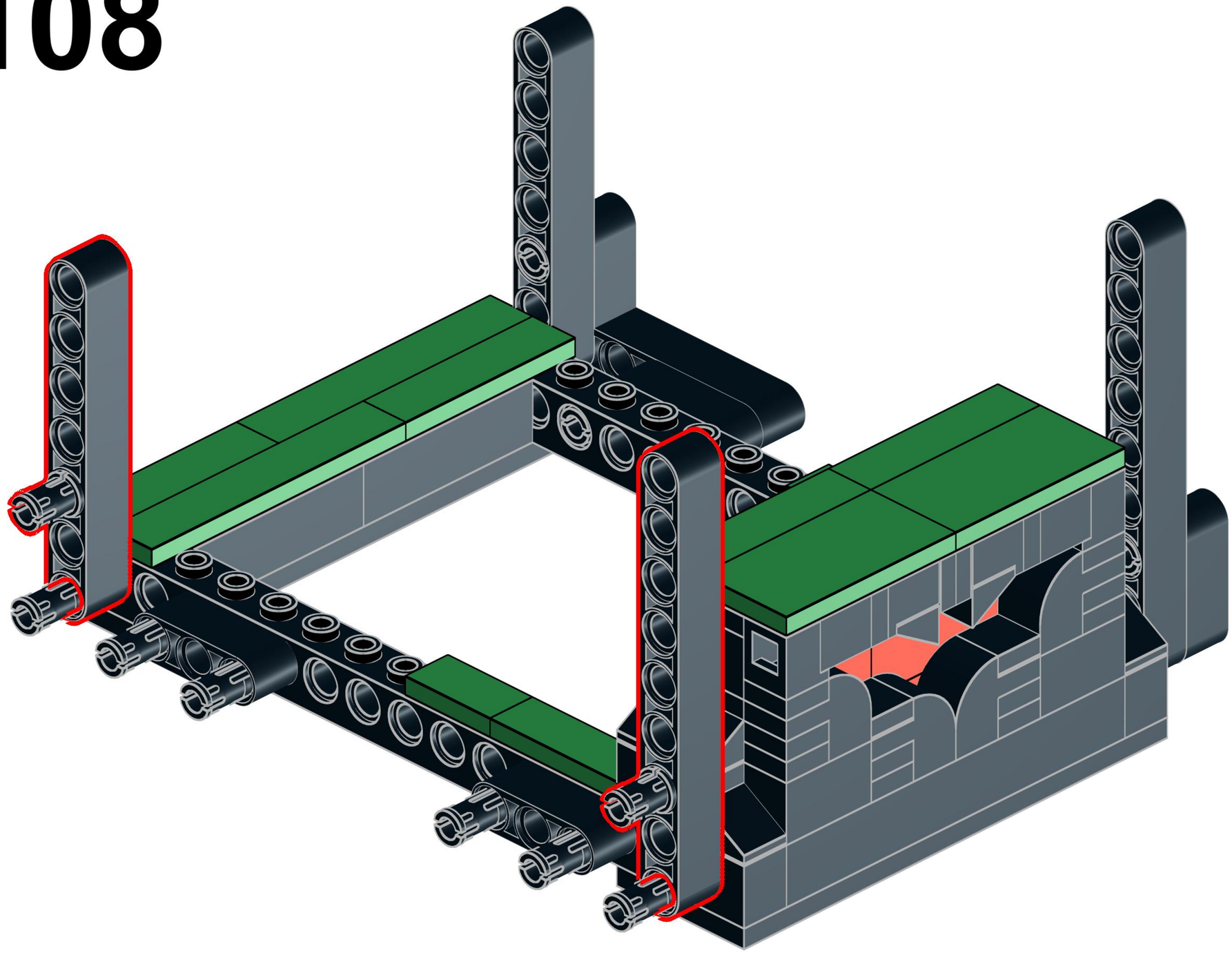

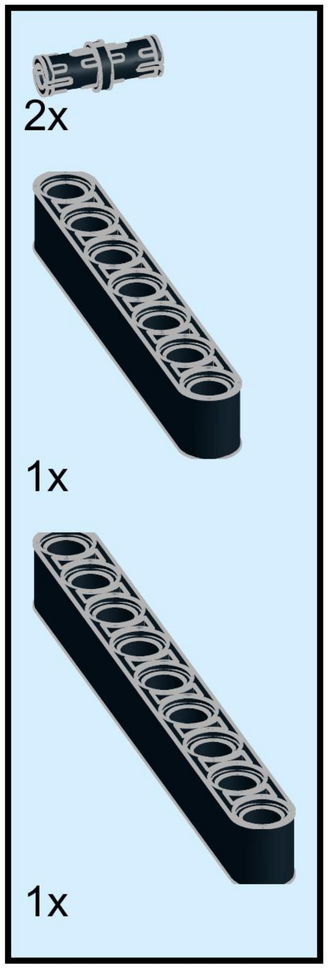

109

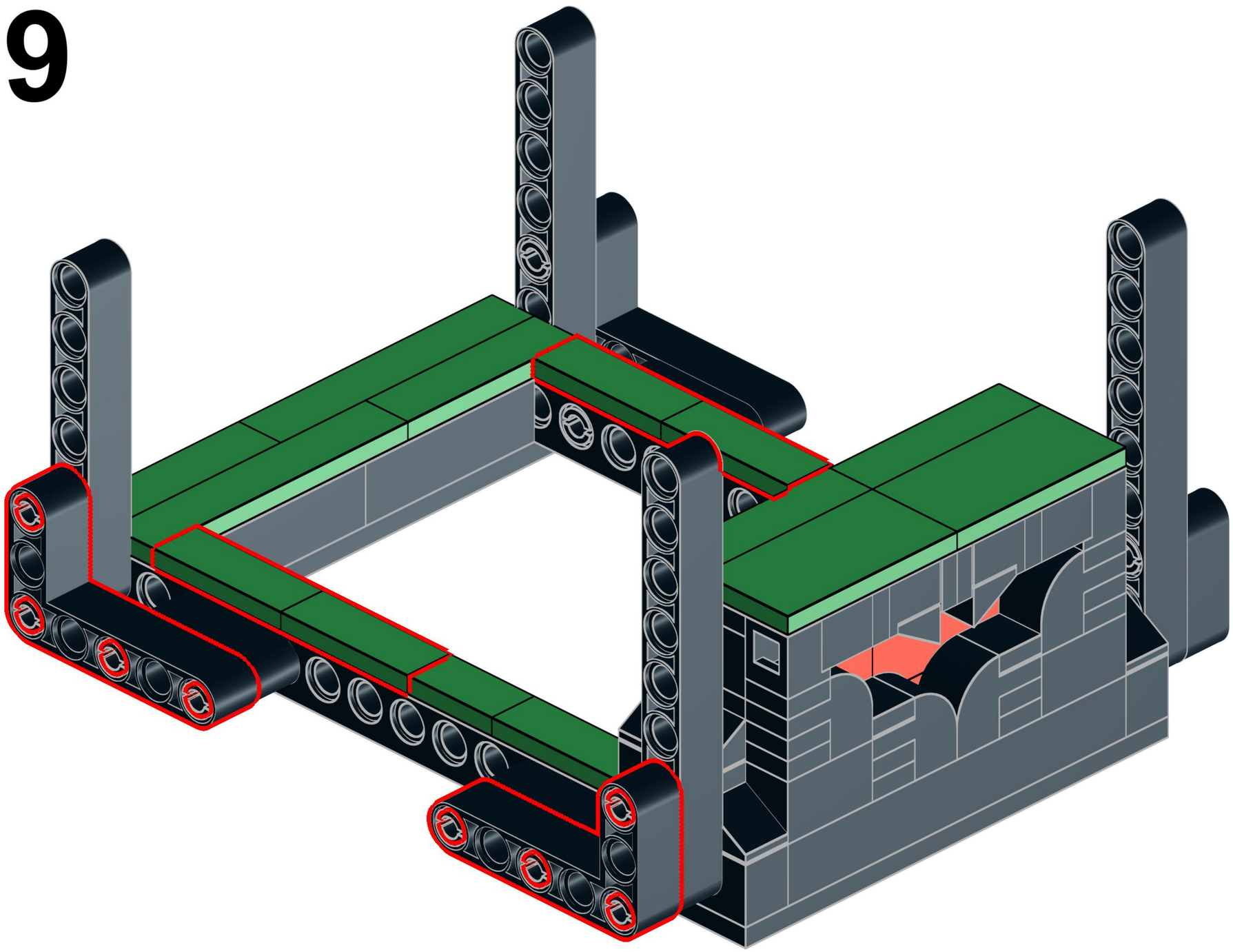

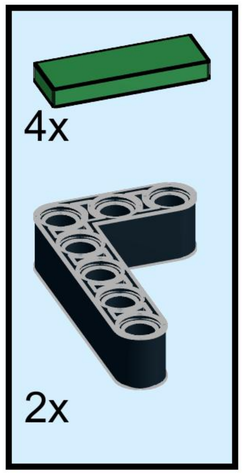

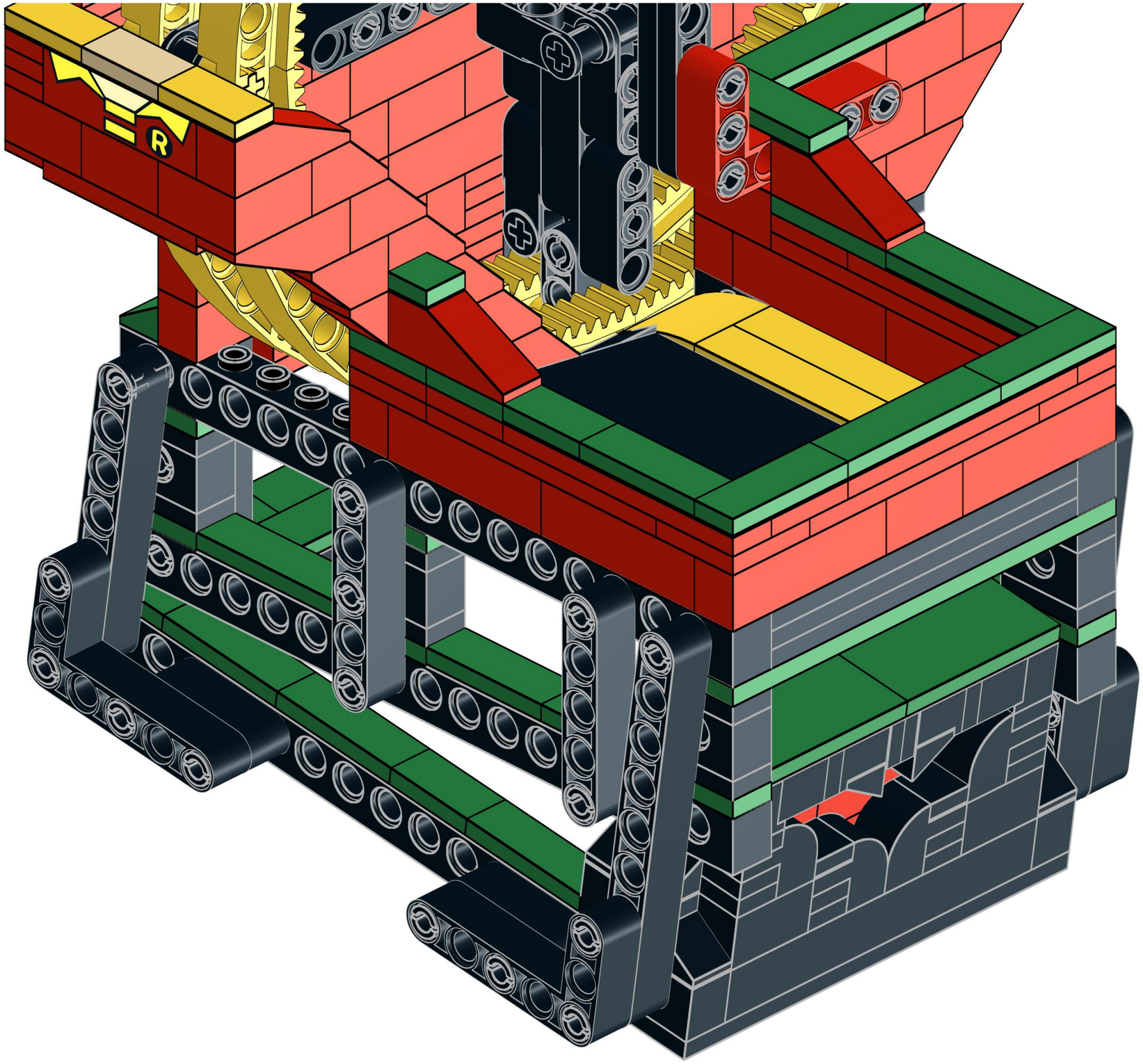

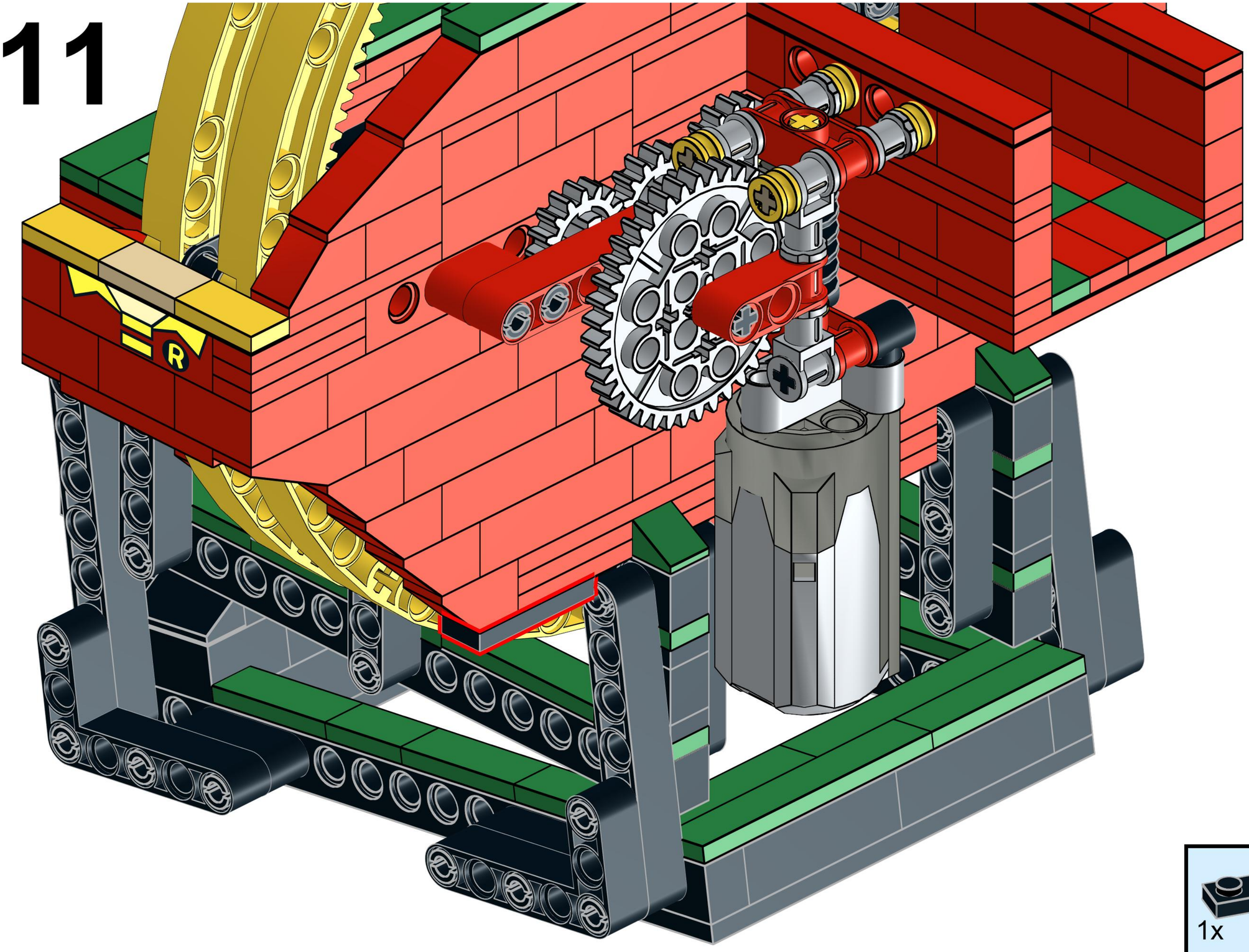
R

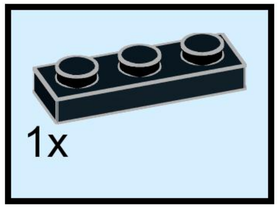
1x

112

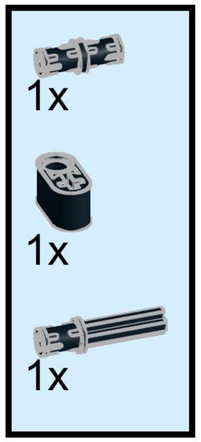

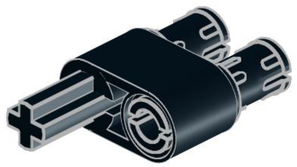

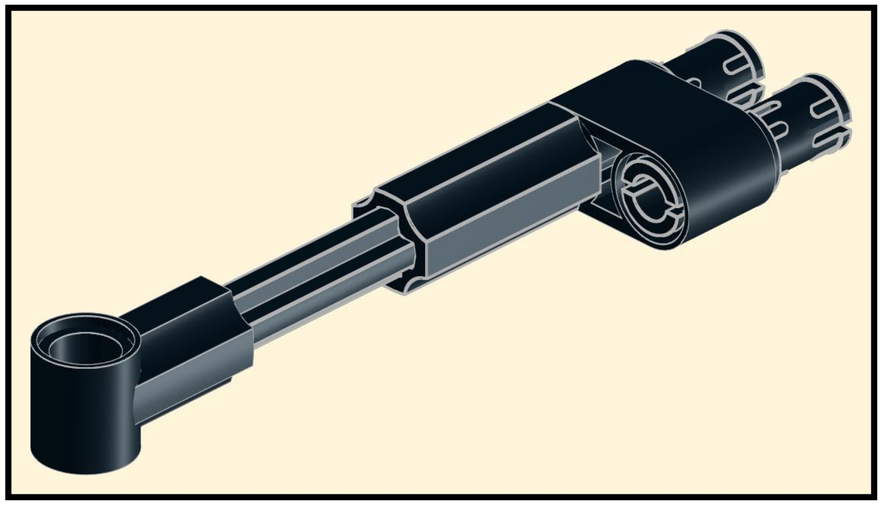

113

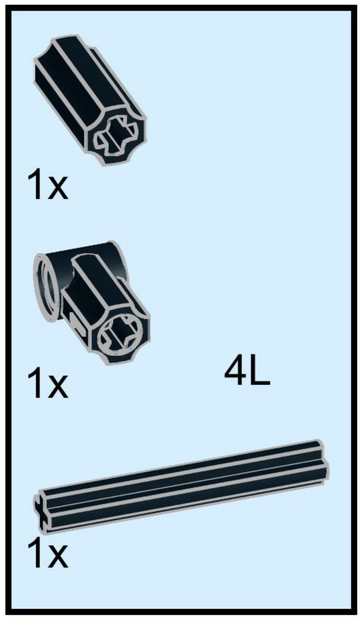

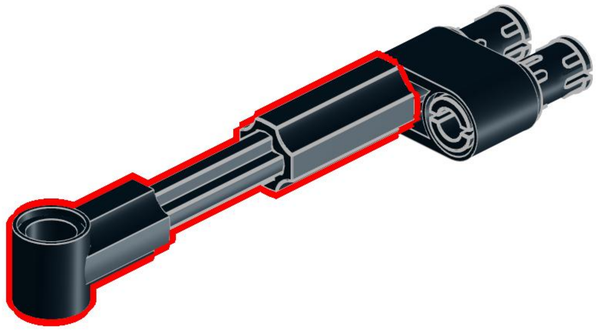

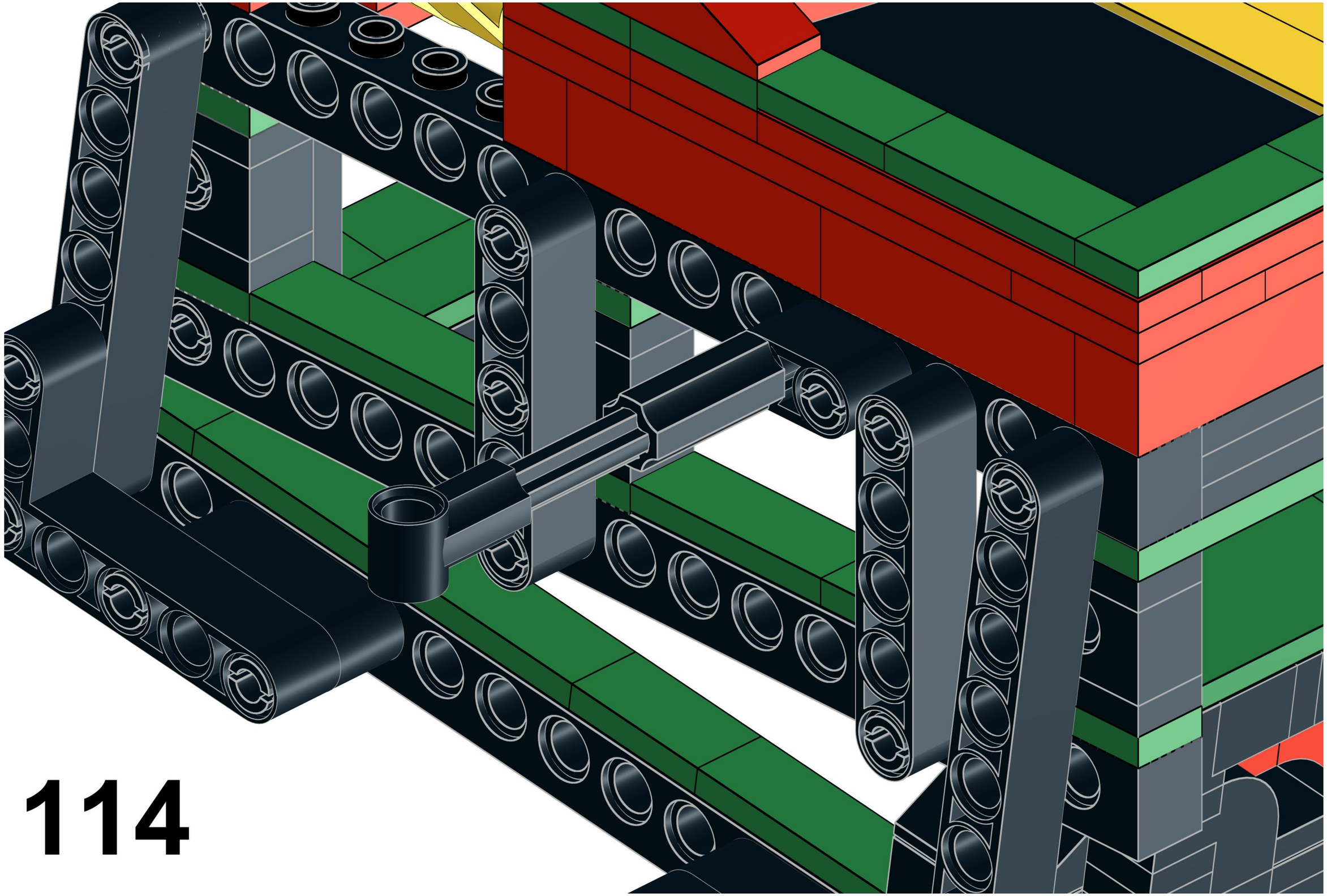

115

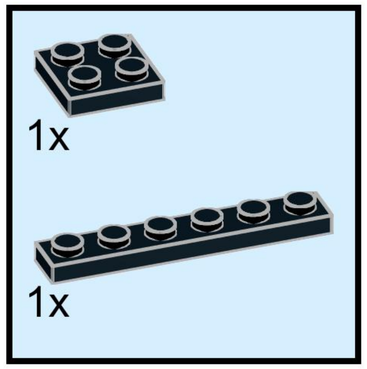

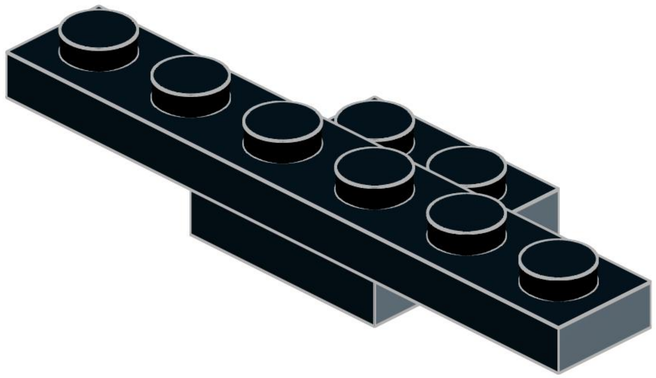

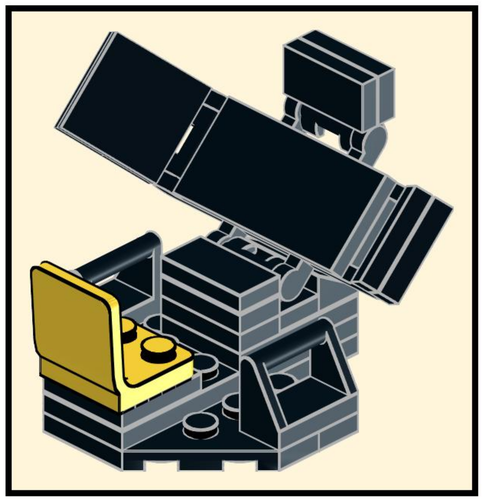

116

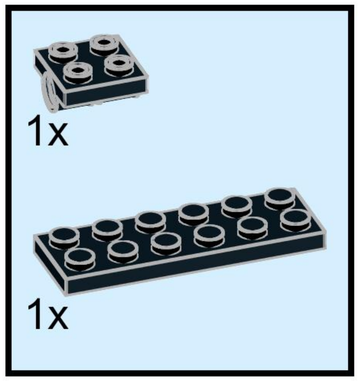

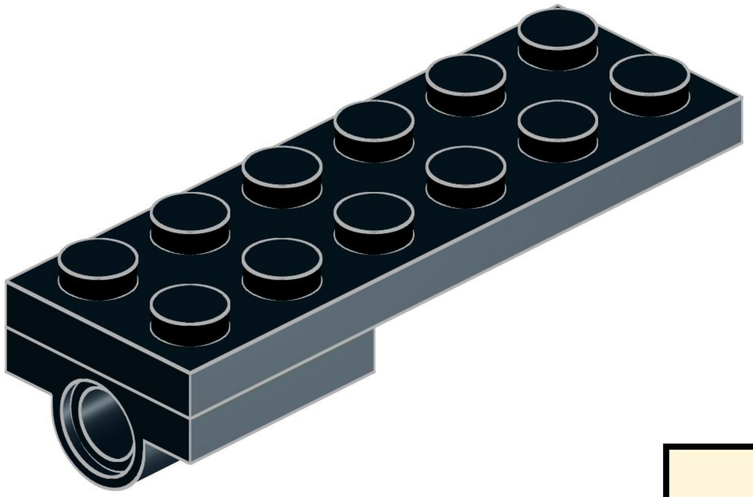

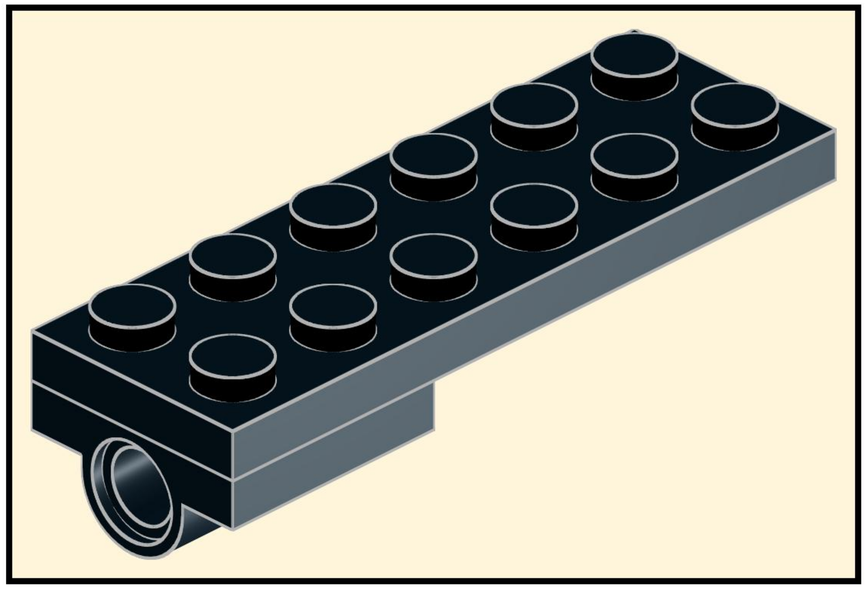

117

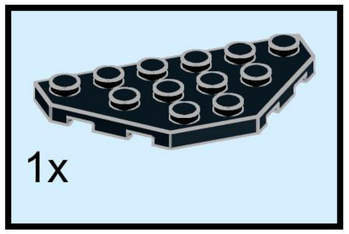

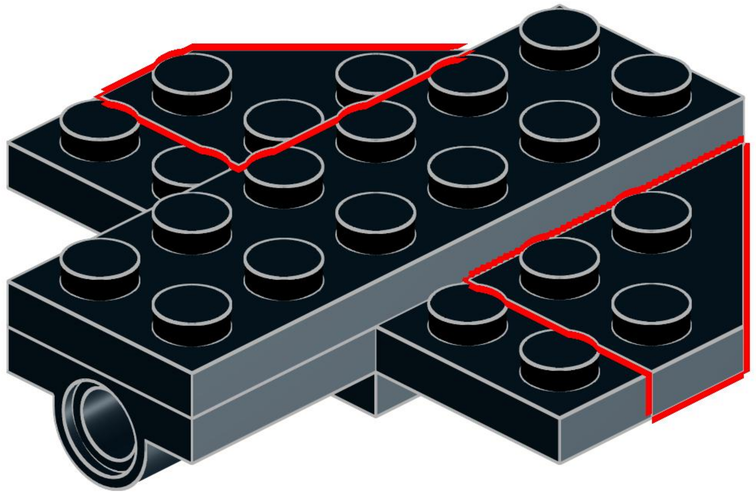

118

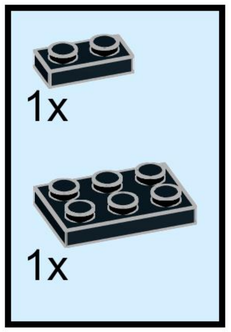

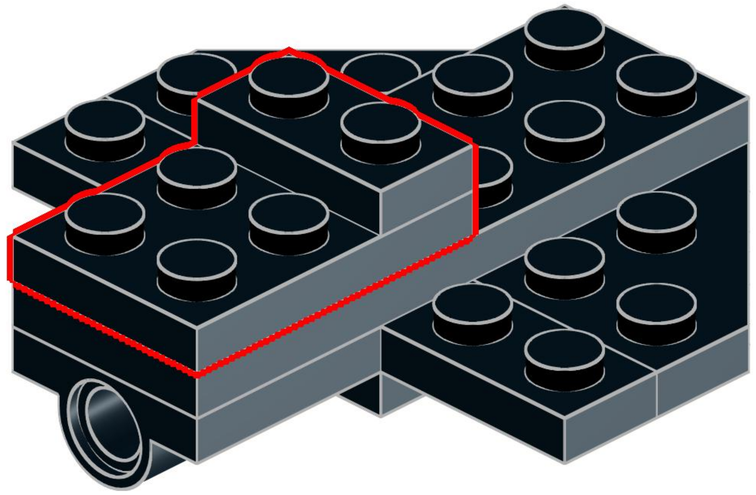

119

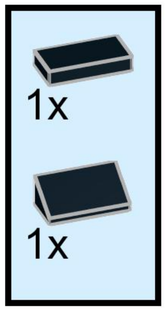

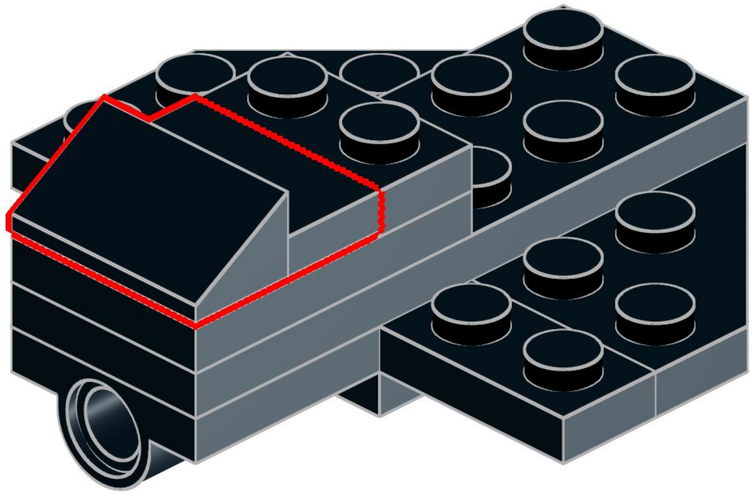

120

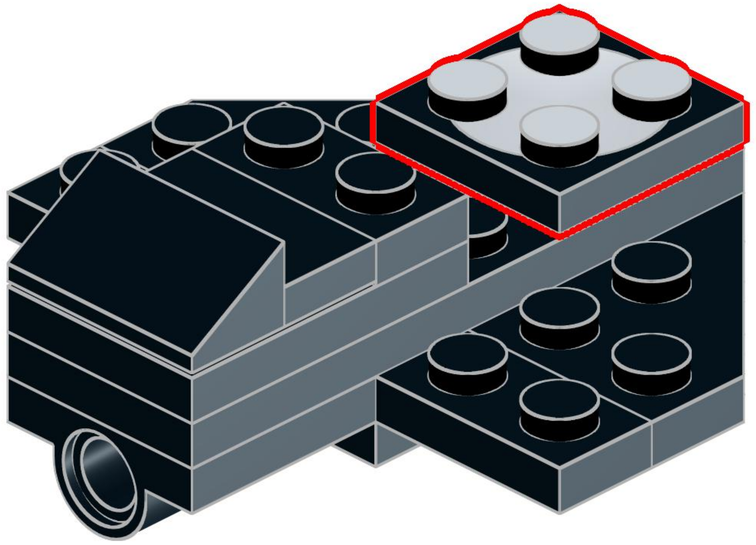

121

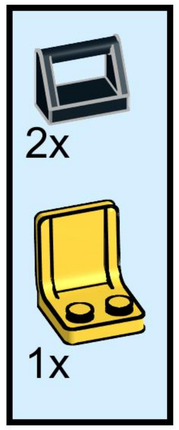

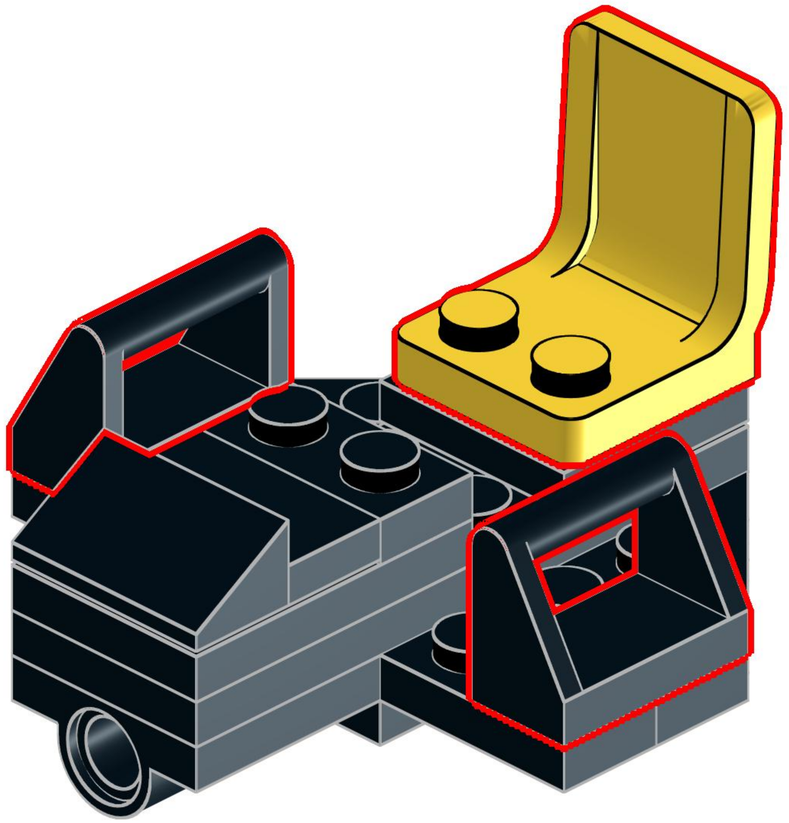

122

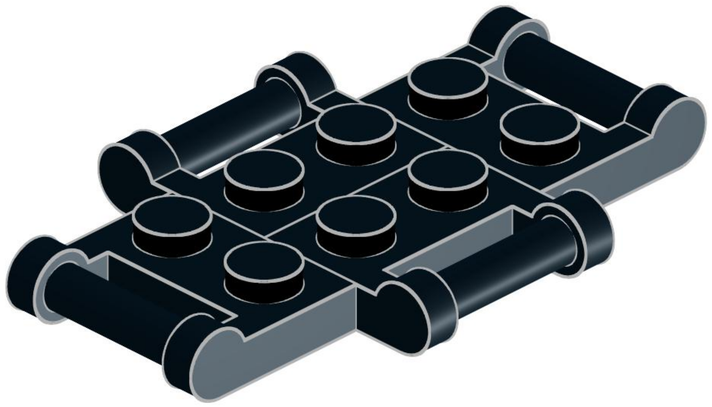

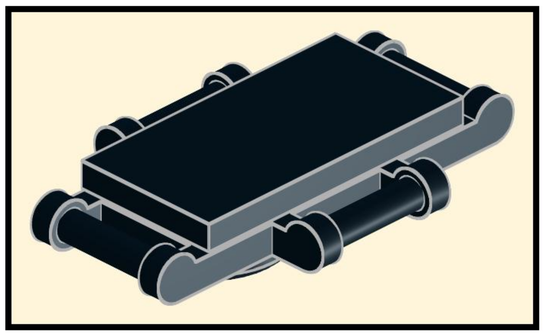

123

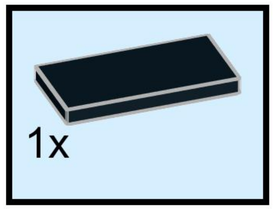

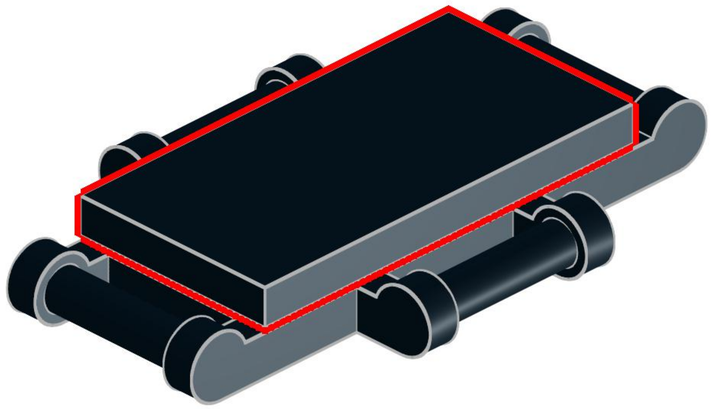

124

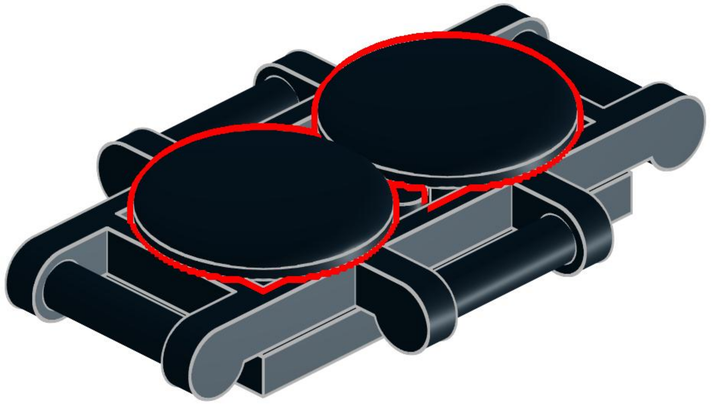

125

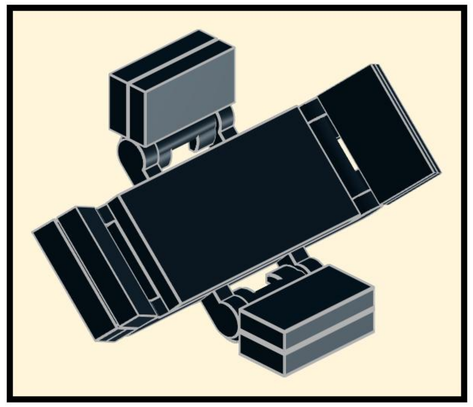

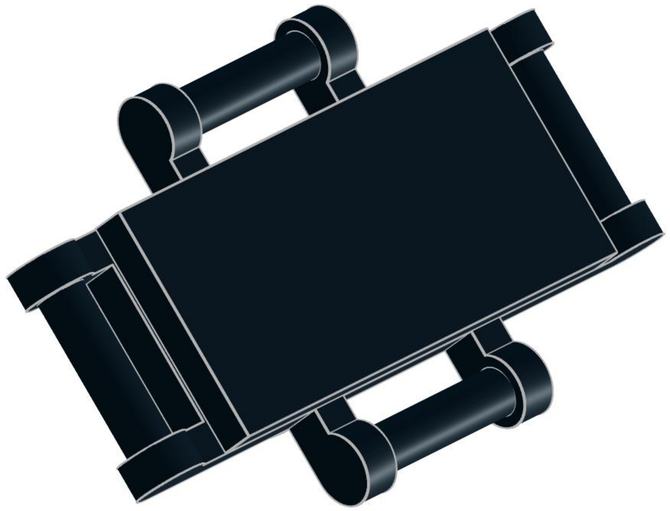

126

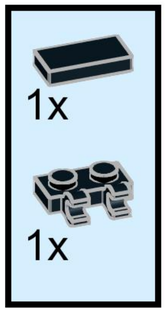

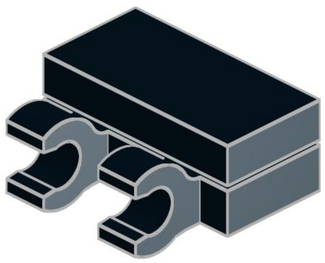

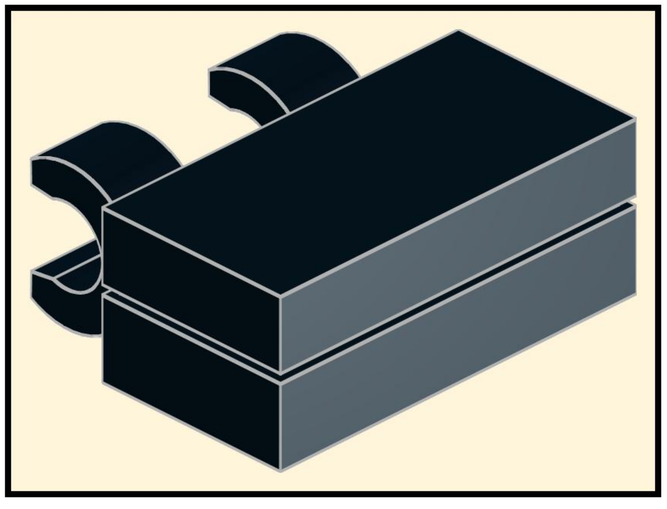

127

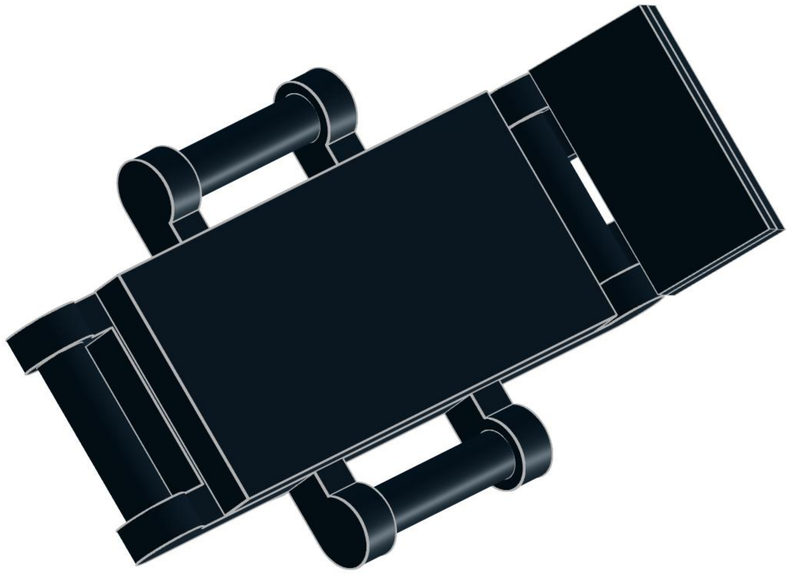

128

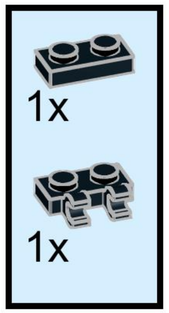

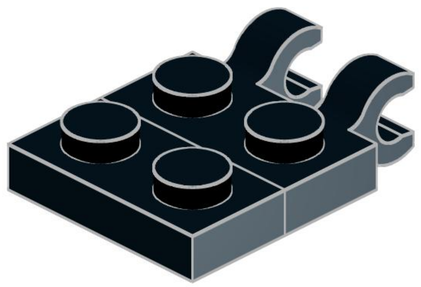

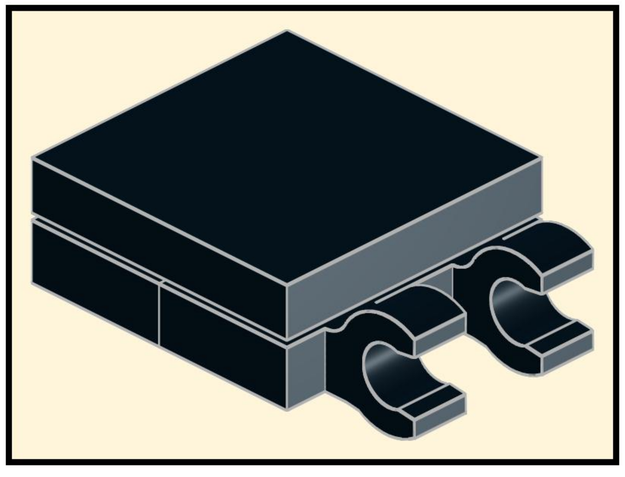

129

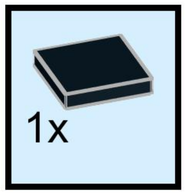

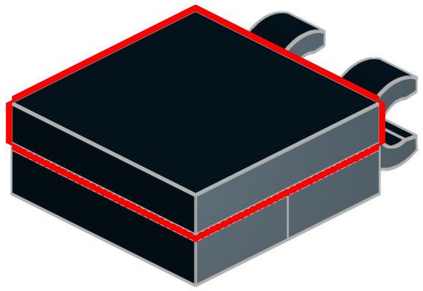

130

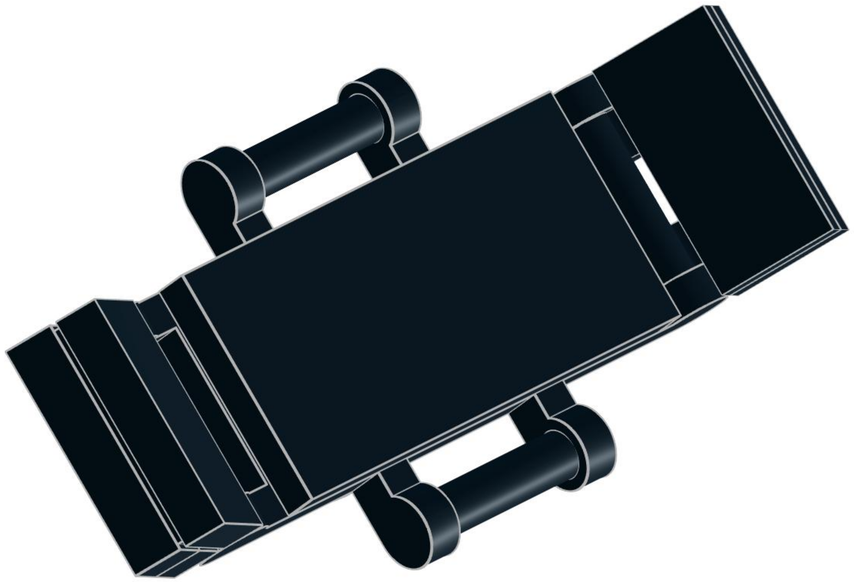

131

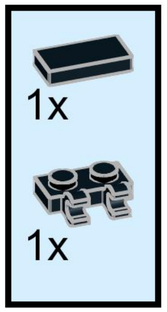

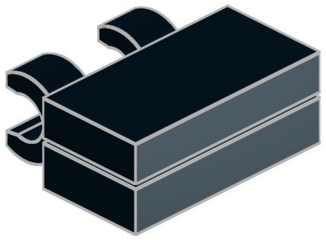

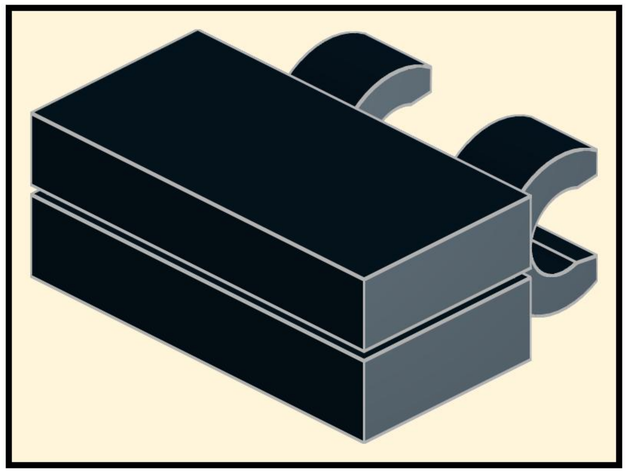

132

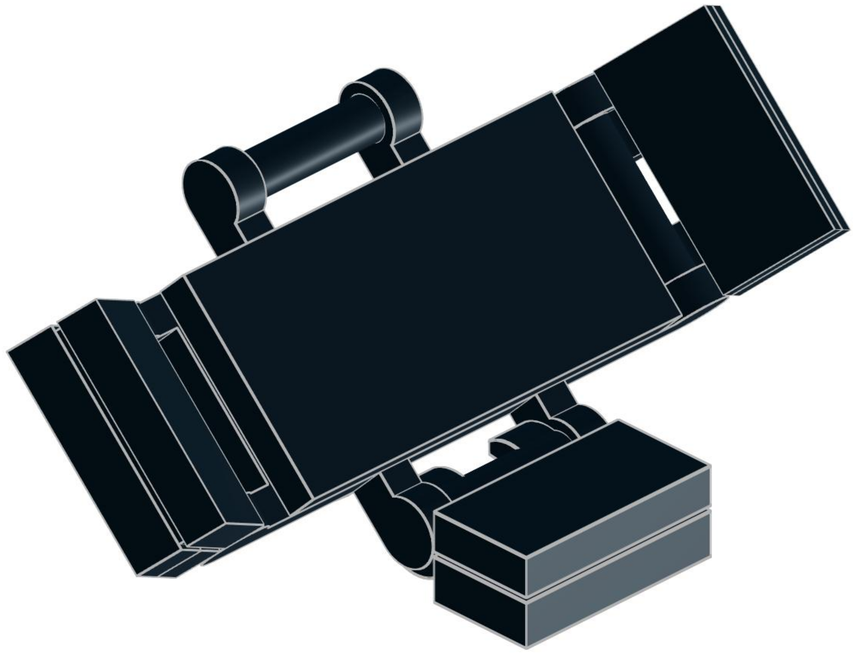

133

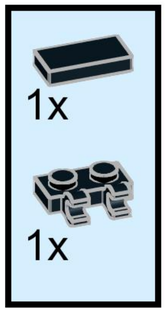

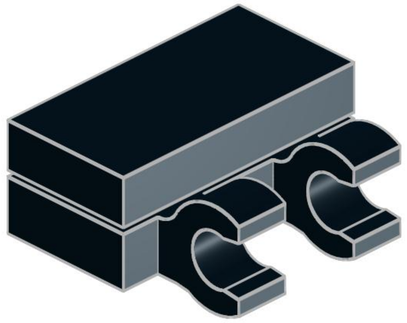

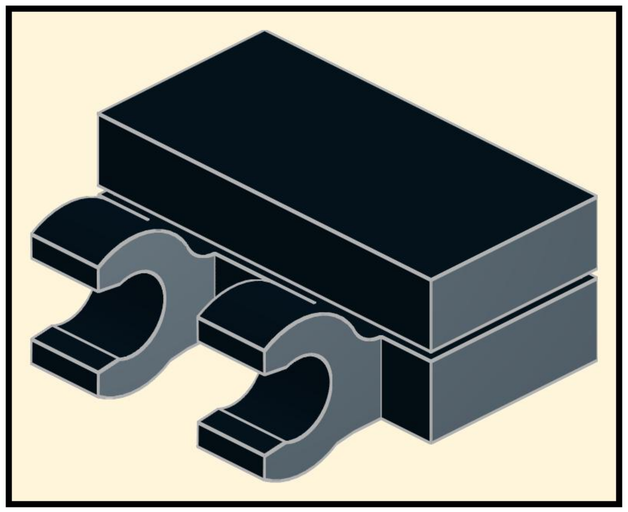

134

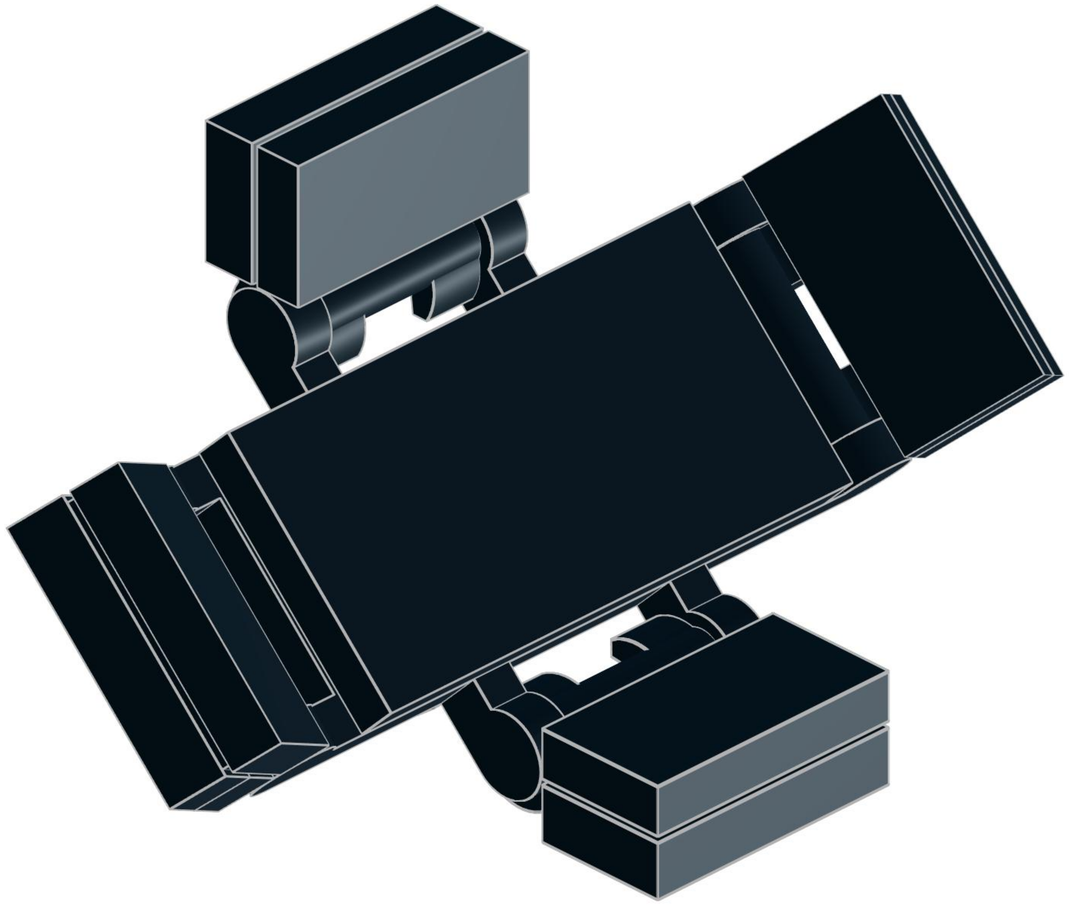

135

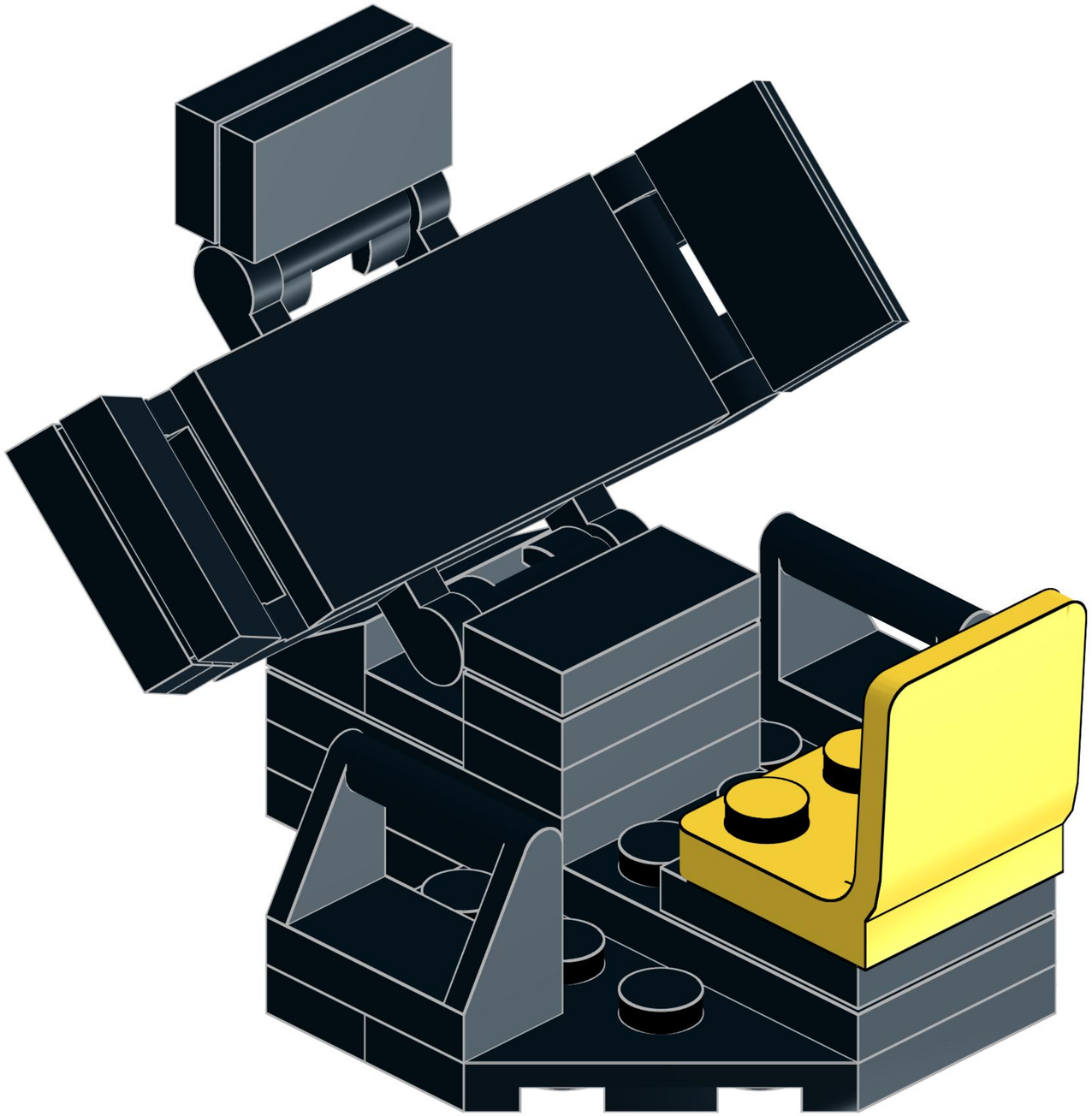

136

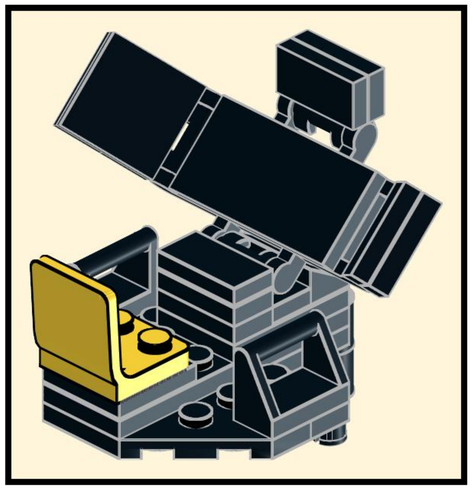

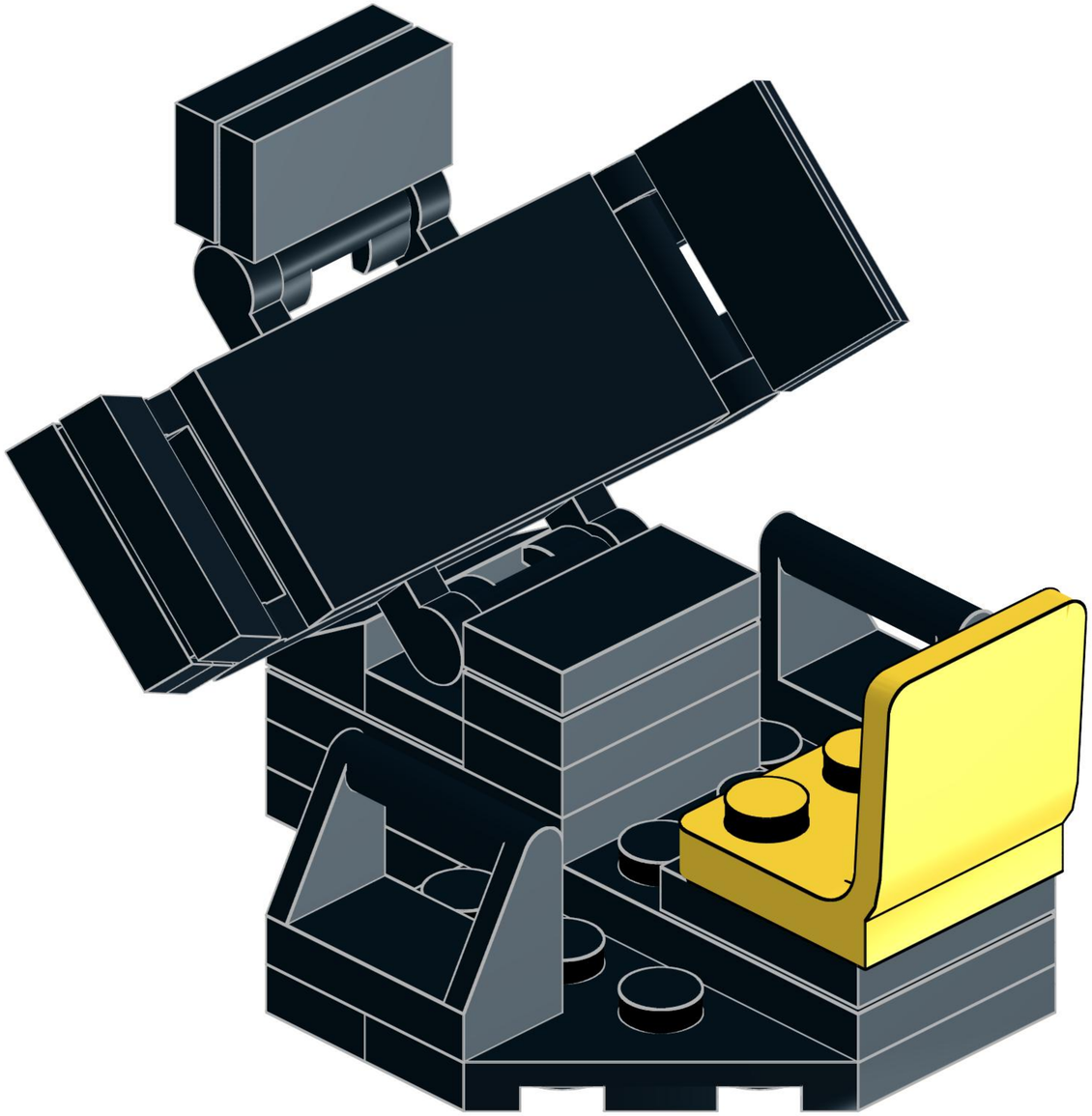

For simplicity, this Bat Computer has been built with blank, black screens (tiles). For a more appealing module, replace these tiles with other screens, panels or keyboard tiles you may already have in your collection.

137

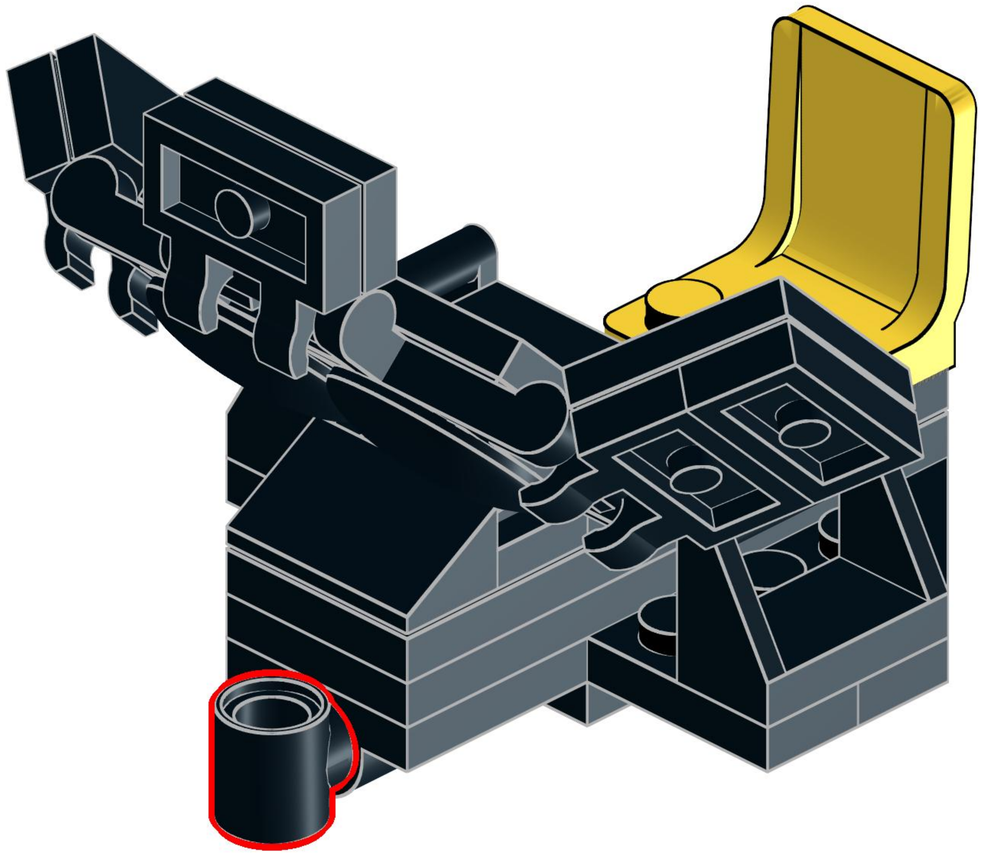

Once the Bat Computer is attached to the module body, you will need to rotate it at this connection, to position it level with the ground.

138

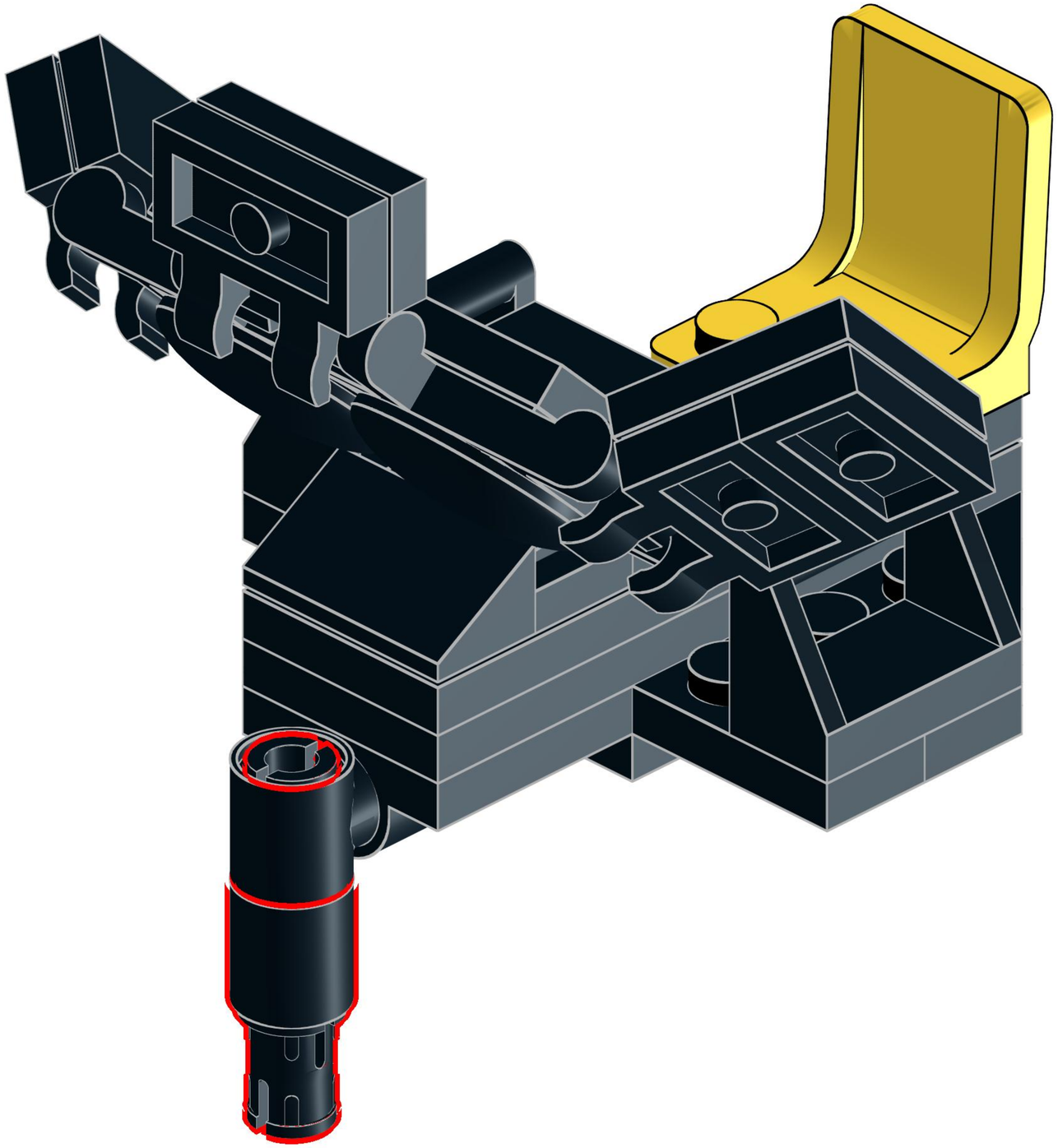

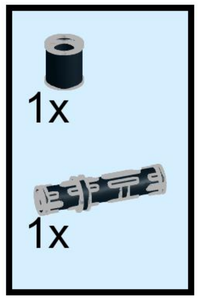

139

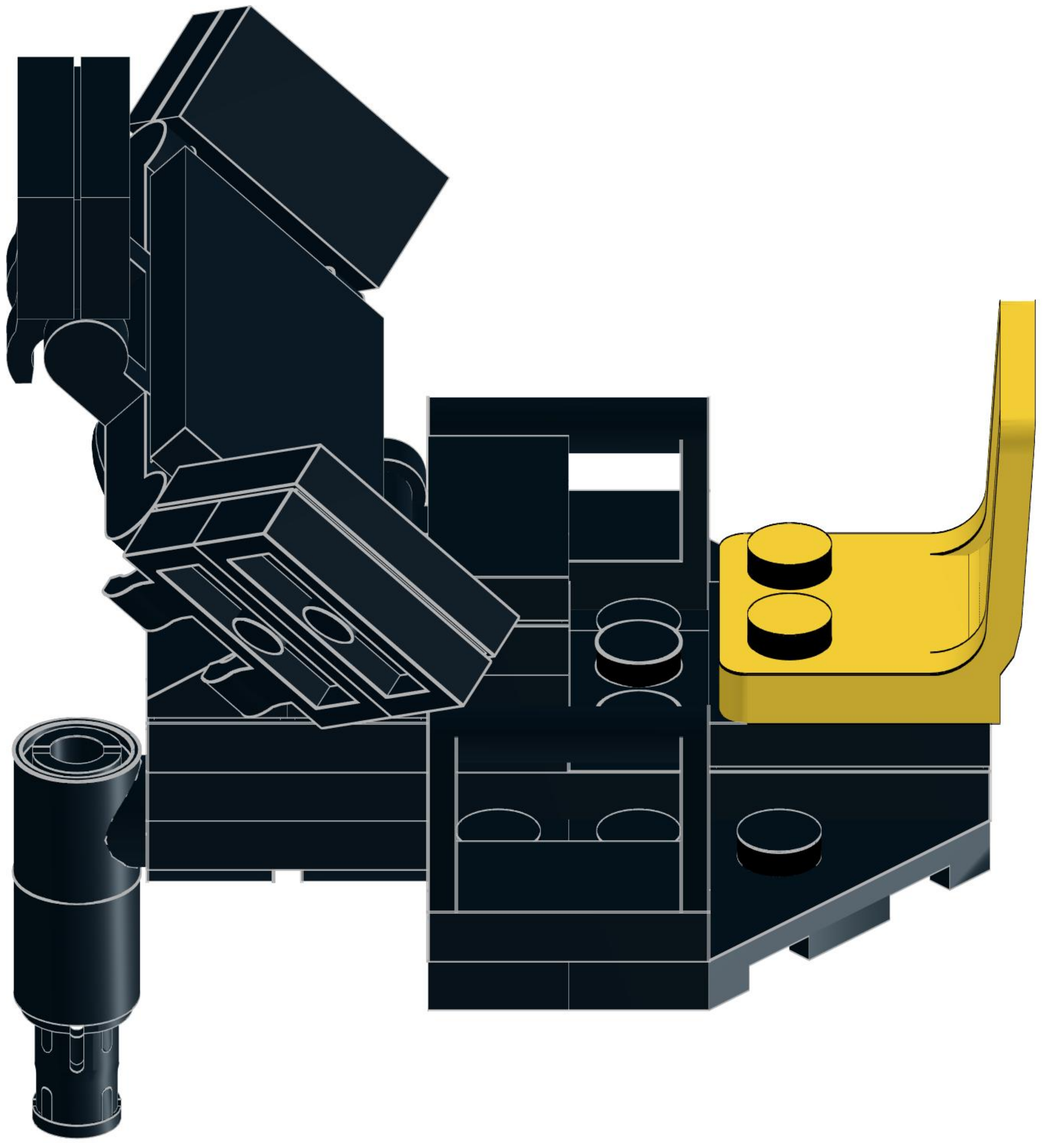

140

Stunt-double for instruction
purposes only.

Replace with a real Superhero!

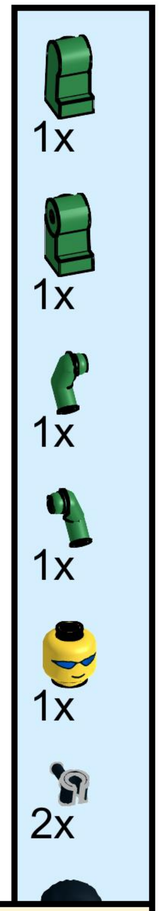

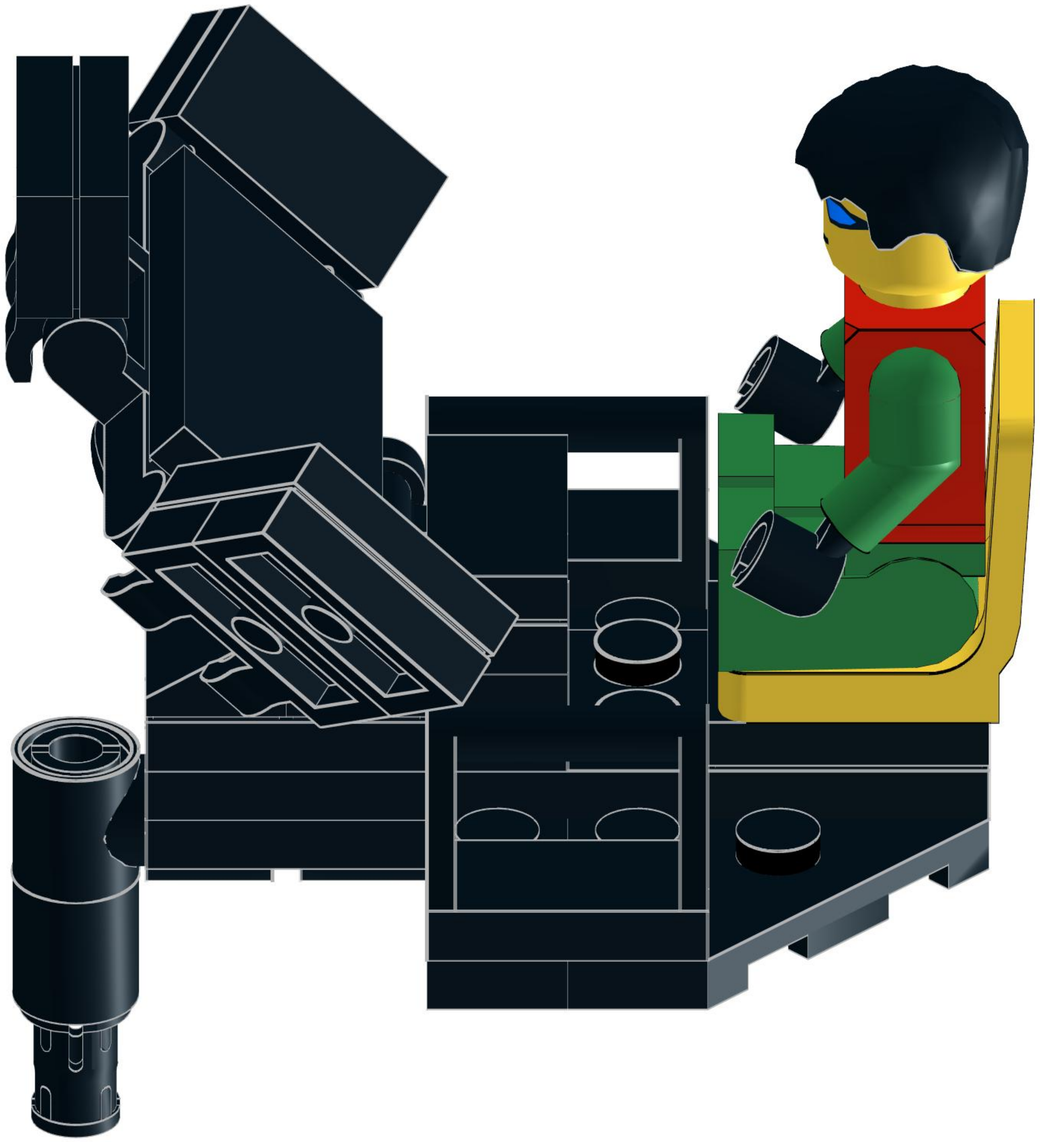

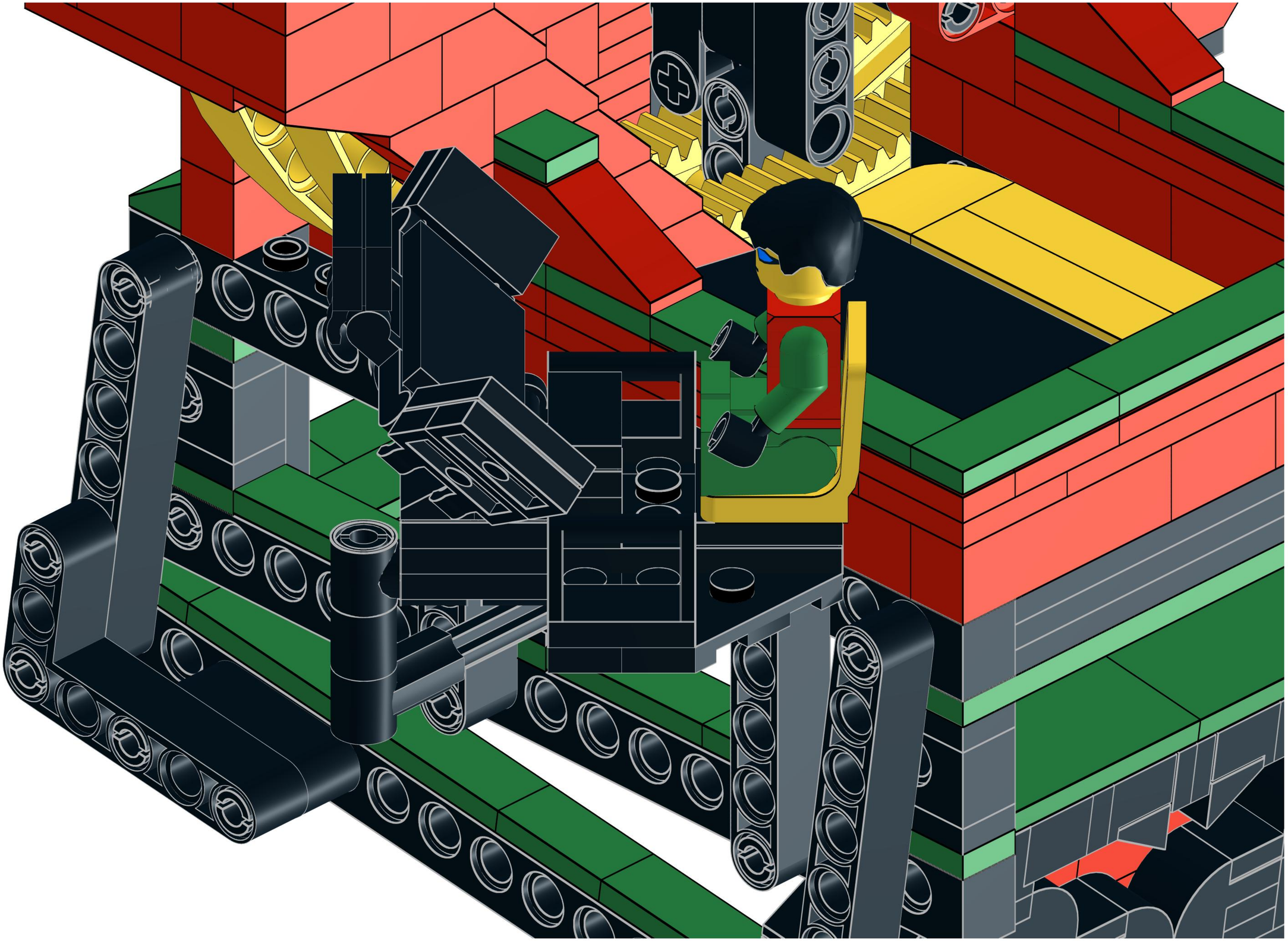

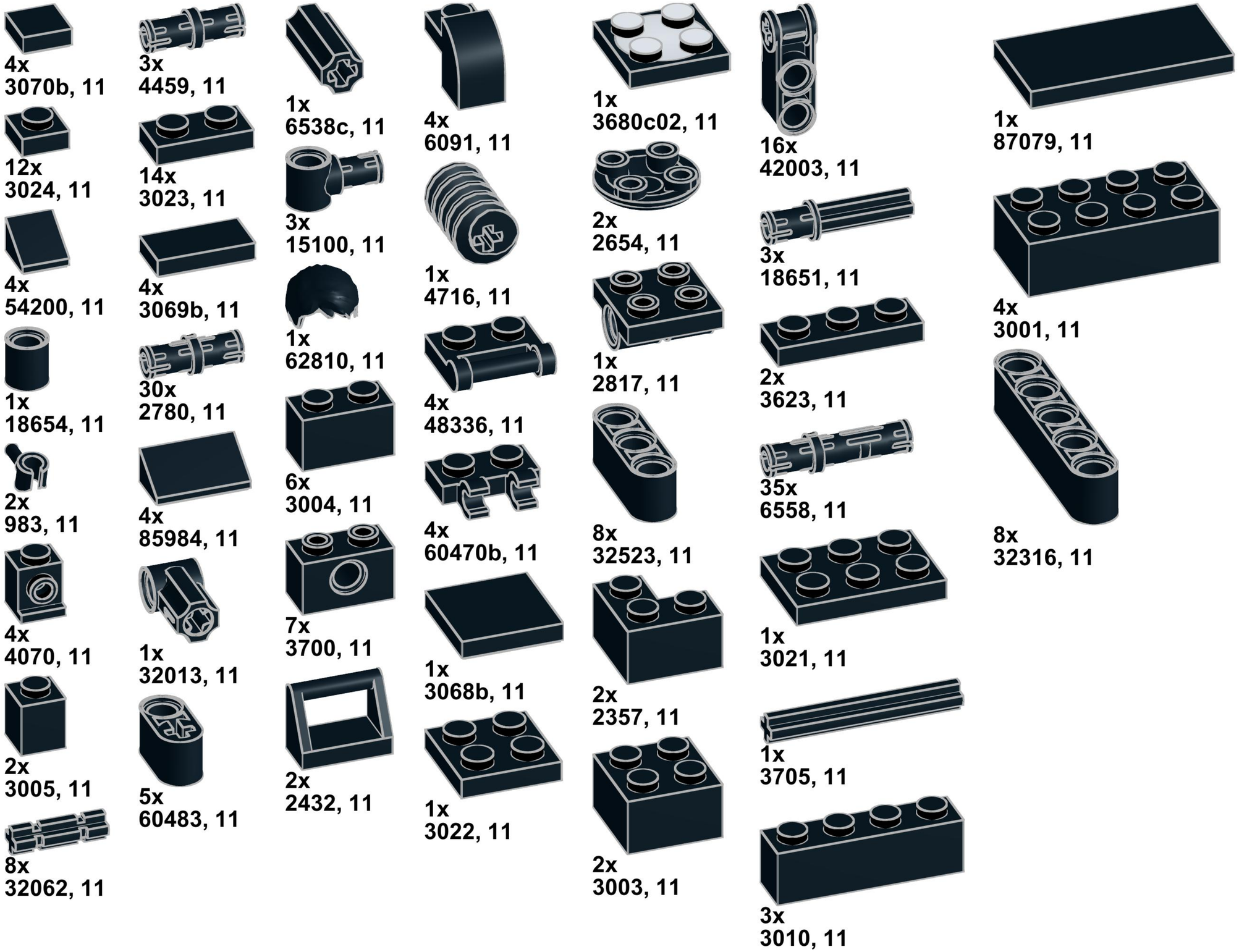
4x
3070b, 11
12x
3024, 11
4x
54200, 11
1x
18654, 11
2x
983, 11
4x
4070, 11
2x
3005, 11
8x
32062, 11
3x
4459, 11
14x
3023, 11
4x
3069b, 11
30x
2780, 11
4x
85984, 11
1x
32013, 11
5x
60483, 11
1x
6538c, 11
3x
15100, 11
1x
62810, 11
6x
3004, 11
7x
3700, 11
2x
2432, 11
4x
6091, 11
1x
4716, 11
4x
48336, 11
4x
60470b, 11
1x
3068b, 11
1x
3022, 11
1x
3680c02, 11
2x
2654, 11
1x
2817, 11
8x
32523, 11
2x
2357, 11
2x
3003, 11
16x
42003, 11
3x
18651, 11
2x
3623, 11
35x
6558, 11
1x
3021, 11
1x
3705, 11
3x
3010, 11
1x
87079, 11
4x
3001, 11
8x
32316, 11

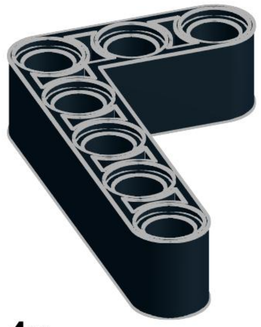

4x
32526, 11

2x
32063, 11

1x
3706, 11

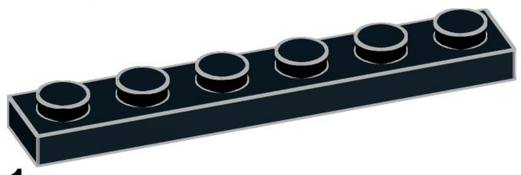

1x
3666, 11

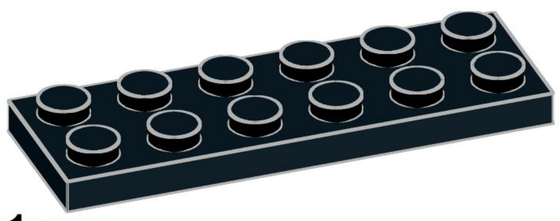

1x
3795, 11

1x
32498, 11

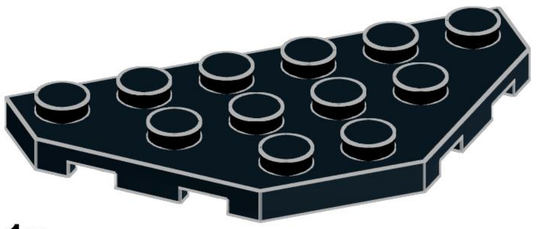

1x
2419, 11

6x
32524, 11

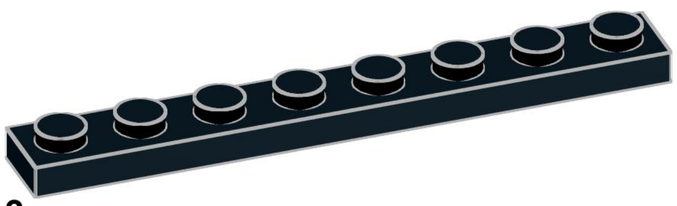

3x
3460, 11

1x
3008, 11

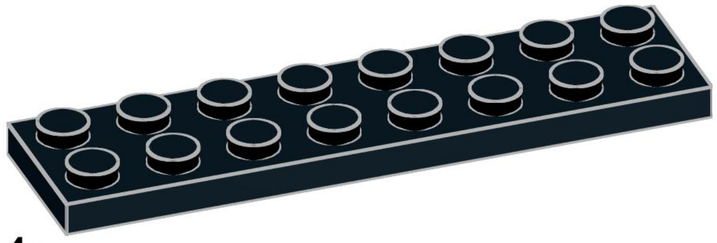

4x
3034, 11

2x
40490, 11

1x
4515, 11

1x
32525, 11

1x
4477, 11

5x
3703, 11

1x
2730, 11

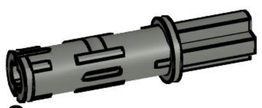

2x
11214, 85

2x
3832, 11

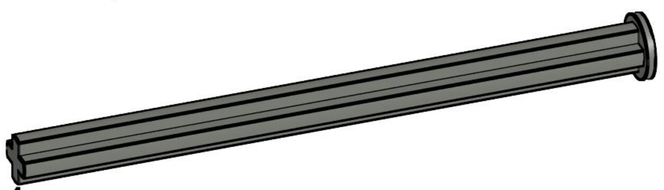

1x
55013, 85

1x
3749, 9

2x
3713, 86

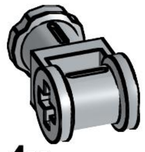
4x
32039, 86

2x
4519, 86

3x
94925, 86

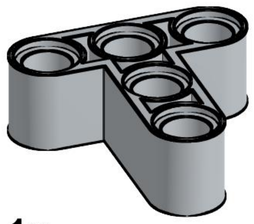
1x
60484, 86

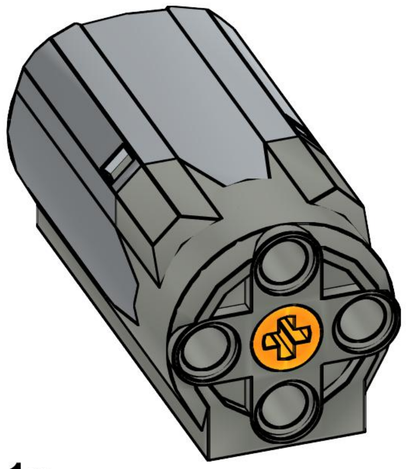
1x
58120c01, 86

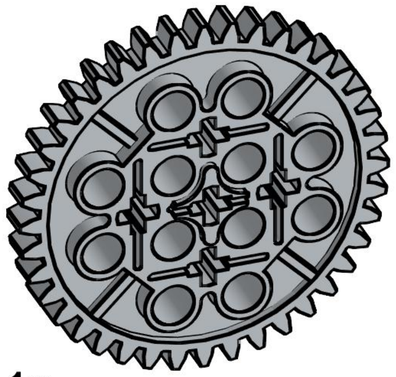
1x
3649, 86

10x
3005, 5

1x
43857, 5

2x
3069b, 5

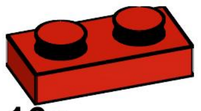
16x
3023, 5

12x
3665, 5

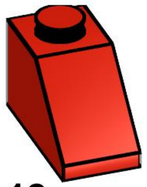
12x
3040, 5

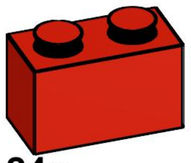
24x
3004, 5

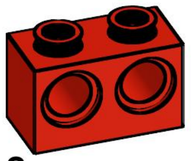
2x
32000, 5

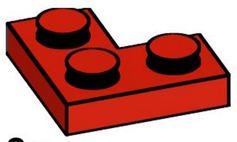
2x
2420, 5

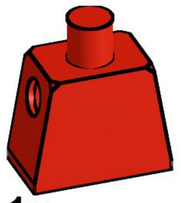
1x
973, 5

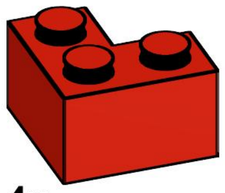
4x
2357, 5

2x
32184, 5

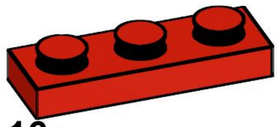
16x
3623, 5

2x
42003, 5

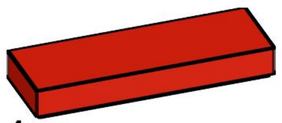
1x
63864, 5

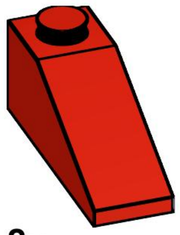
8x
4286, 5

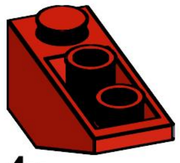
4x
4287, 5

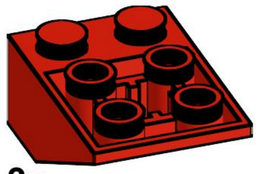
3x
3747b, 5

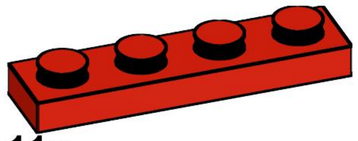
11x
3710, 5

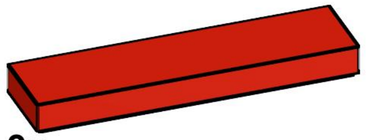
3x
2431, 5

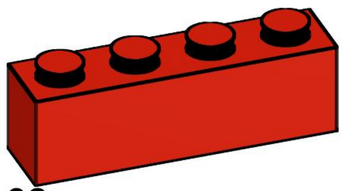
32x
3010, 5

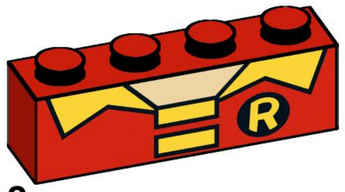
2x
3010pb206, 5

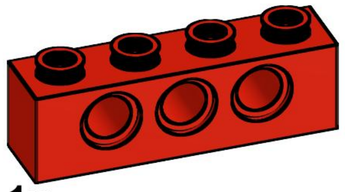
1x
3701, 5

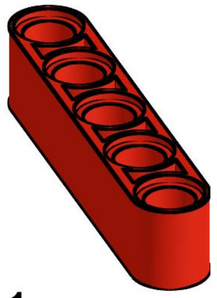
1x
32316, 5

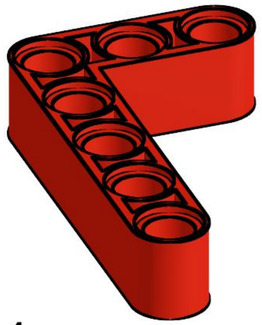
1x
32526, 5

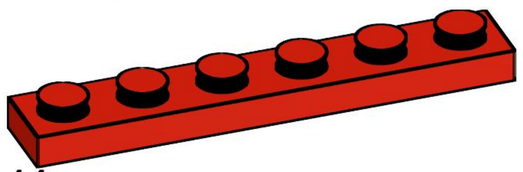
14x
3666, 5

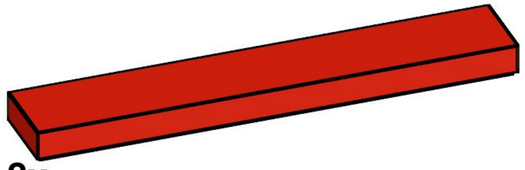

2x
6636, 5

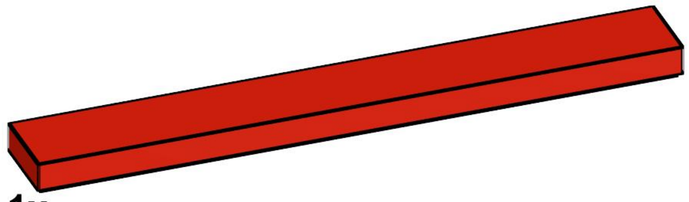

1x
4162, 5

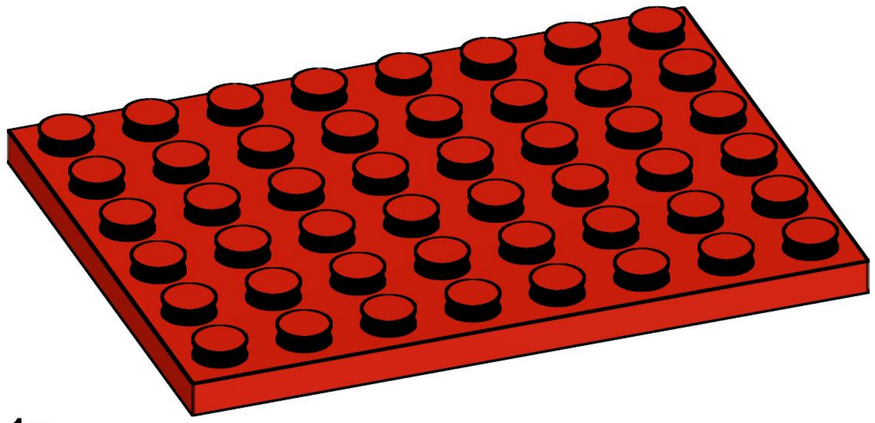

1x
3036, 5

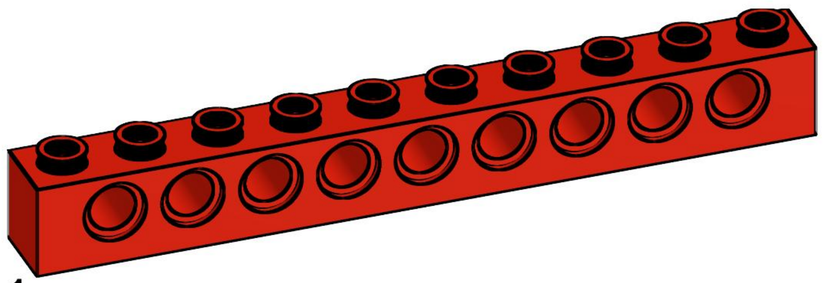

1x
2730, 5

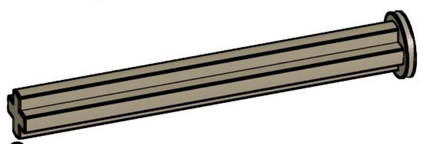

2x
15462, 69

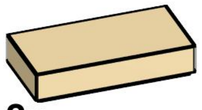

2x
3069b, 2

9x
4265c, 3

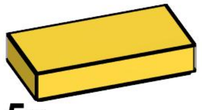

5x
3069b, 3

1x
3626bpx87, 3

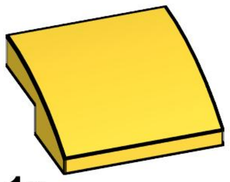

1x
15068, 3

4x
4519, 3

1x
4079b, 3

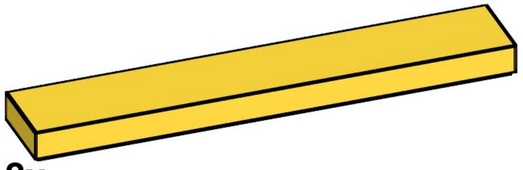

2x
6636, 3

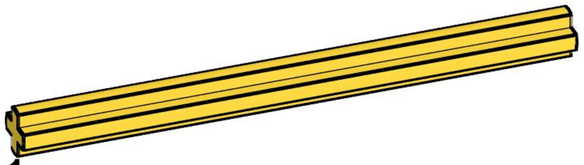

1x
44294, 3

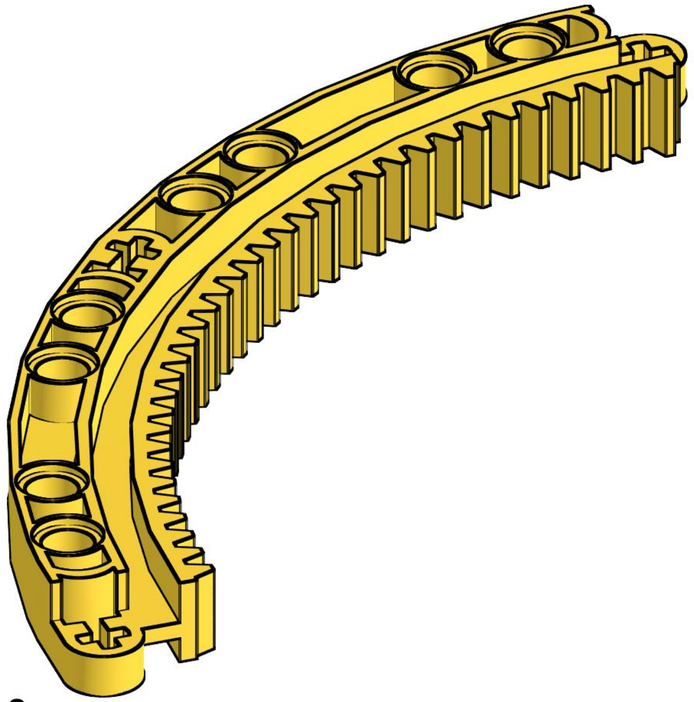

8x
24121, 3

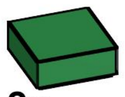

2x
3070b, 6

2x
54200, 6

1x
981, 6

1x
982, 6

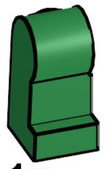

1x
971, 6

1x
972, 6

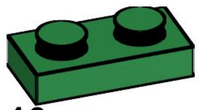

10x
3023, 6

7x
3069b, 6

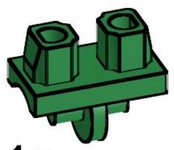

1x
970, 6

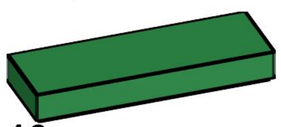

16x
63864, 6

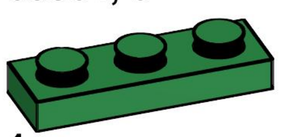

1x
3623, 6

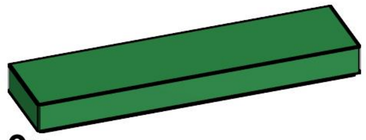

9x
2431, 6

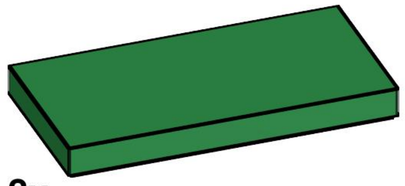

2x
87079, 6

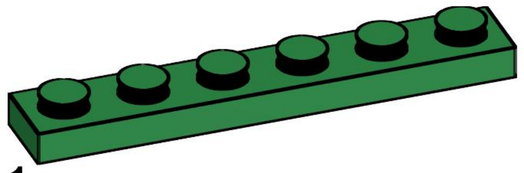

1x
3666, 6

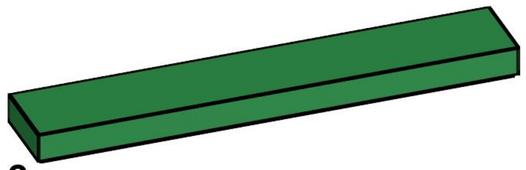

2x
6636, 6

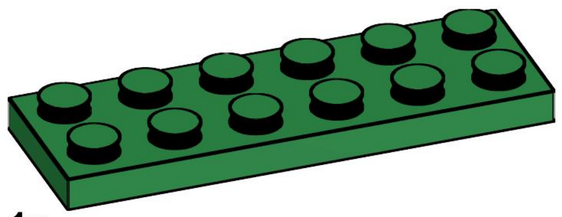

1x
3795, 6

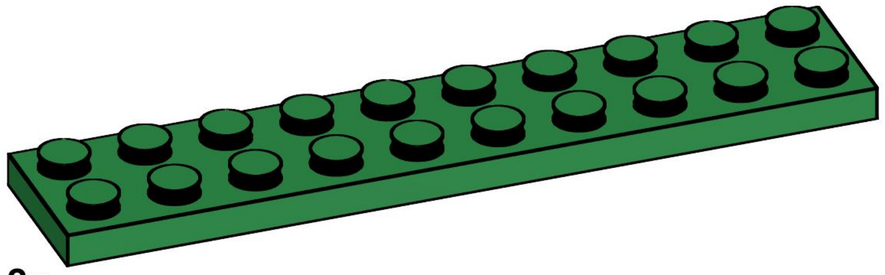

2x
3832, 6