BAT WHEEL

BLACK EDITION

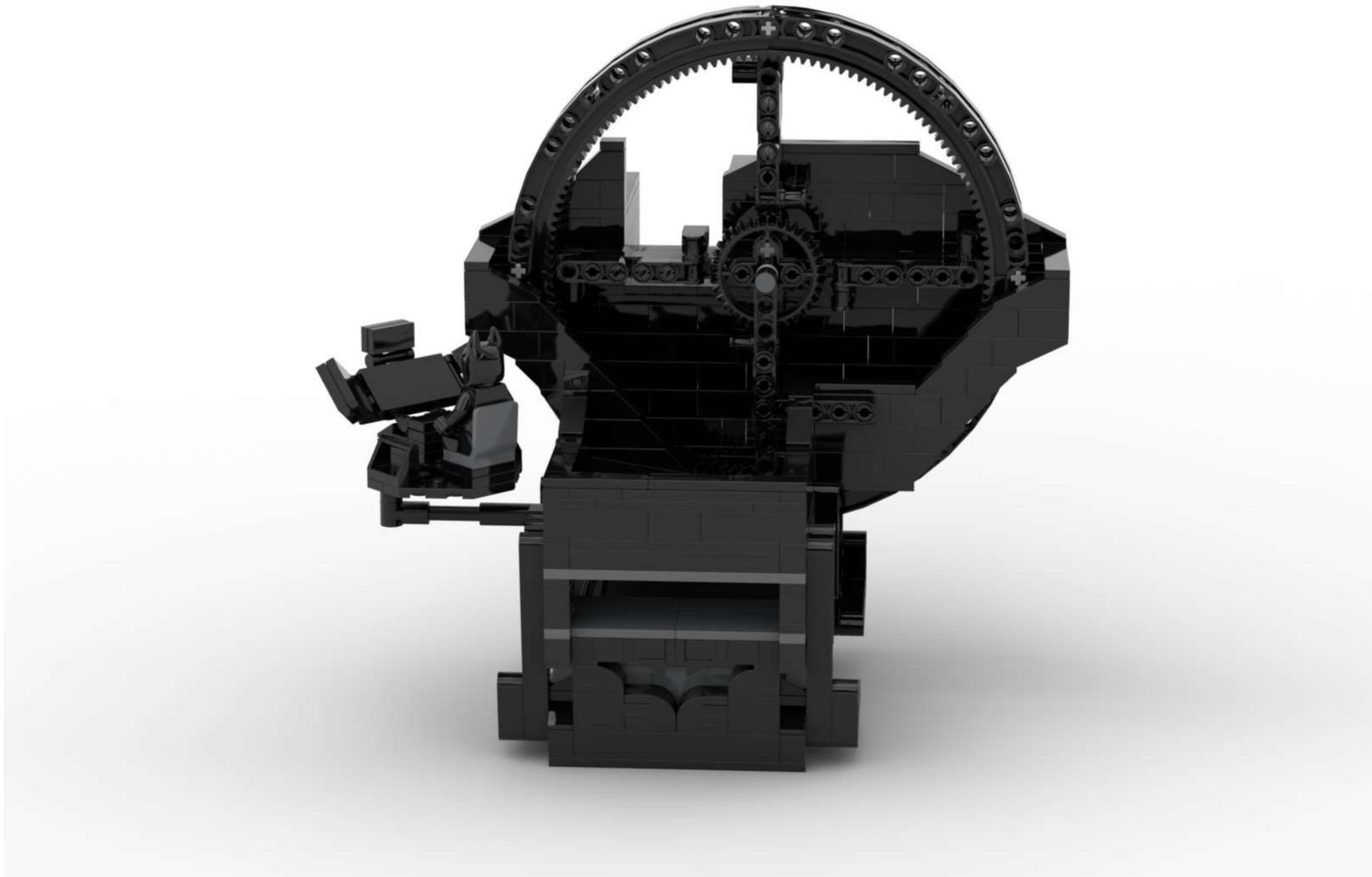

Designed by
Ryk Field
2019

REF05
Version 1.0

Choose Your Superhero

The Bat Wheel is available in four editions. Be sure to download the correct instructions and parts list to suit your preferred Superhero.

1

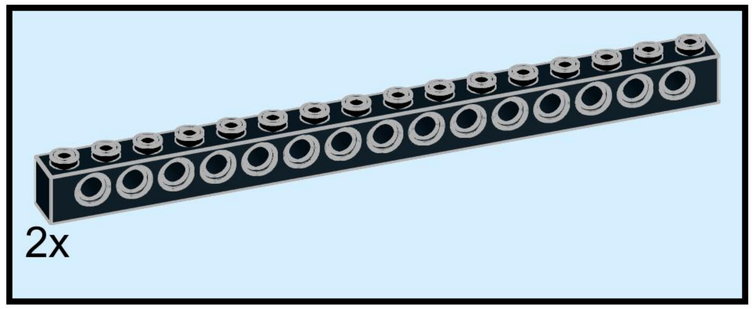

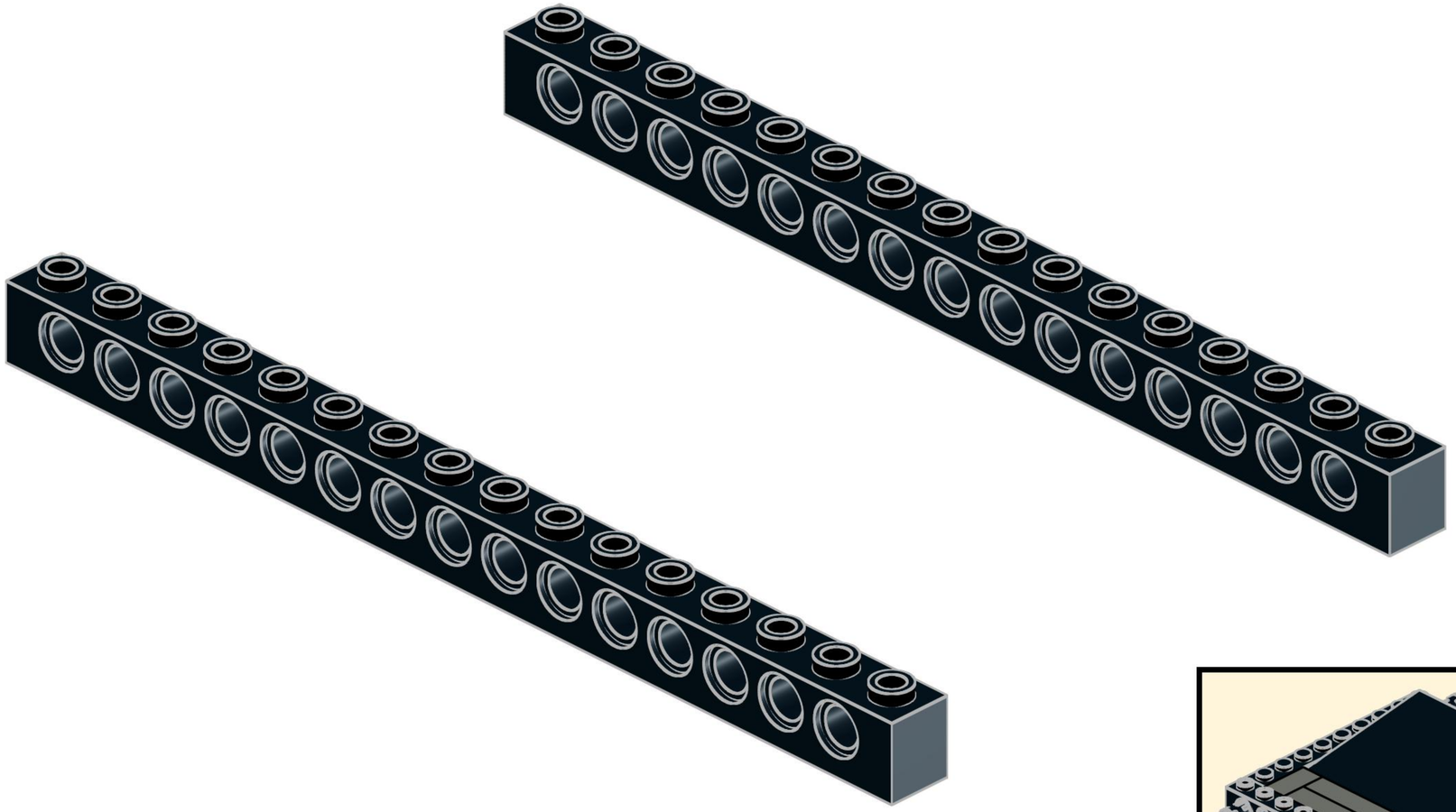

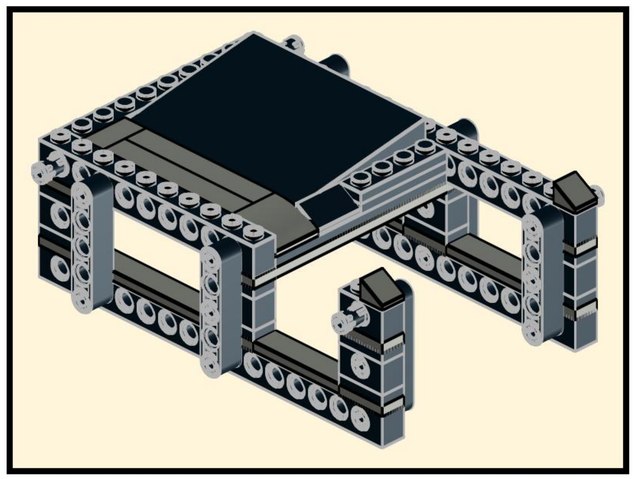

2

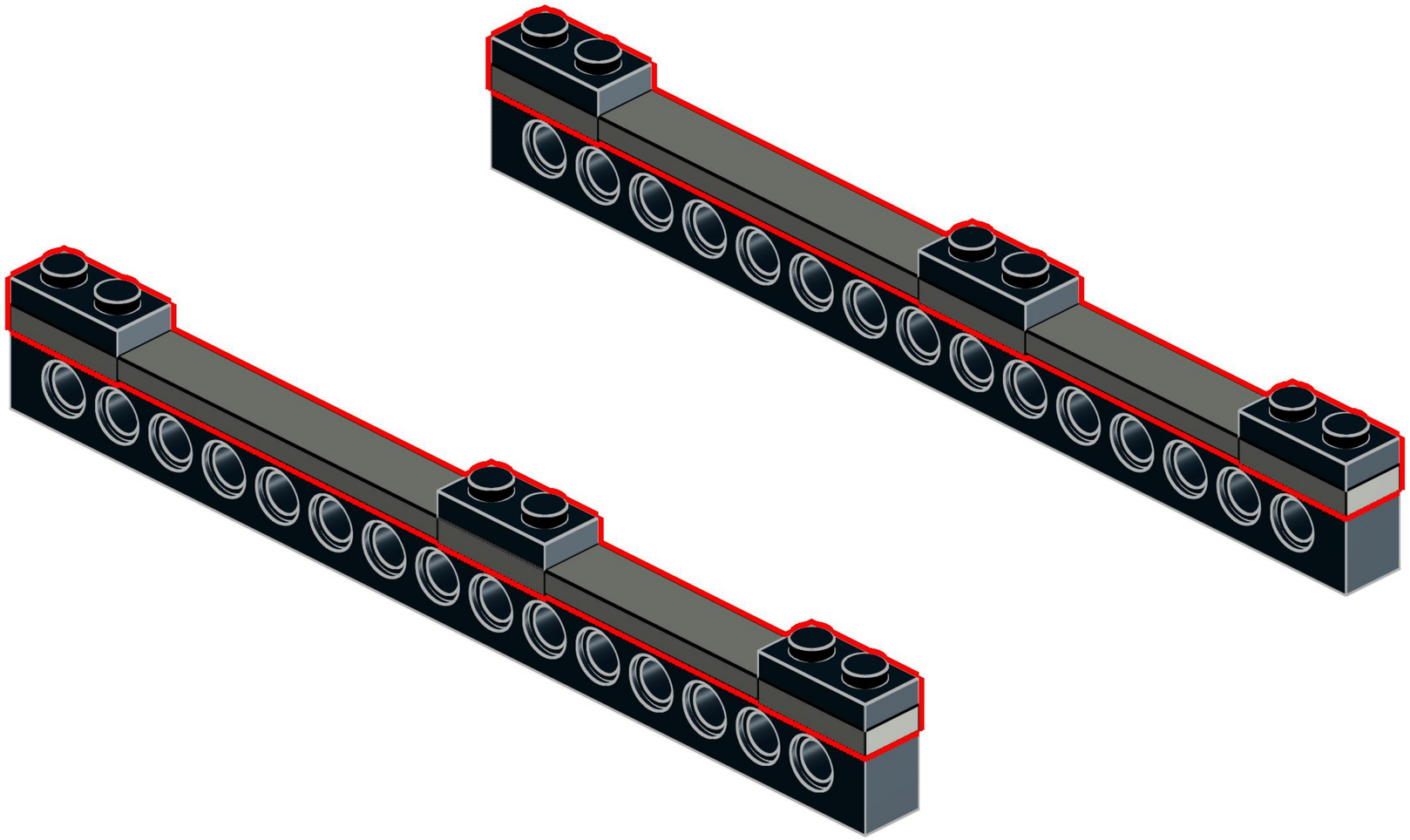

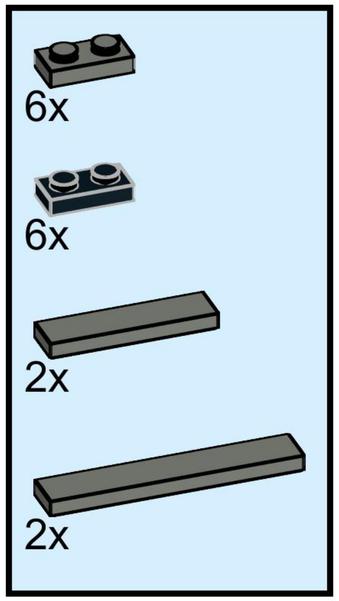

3

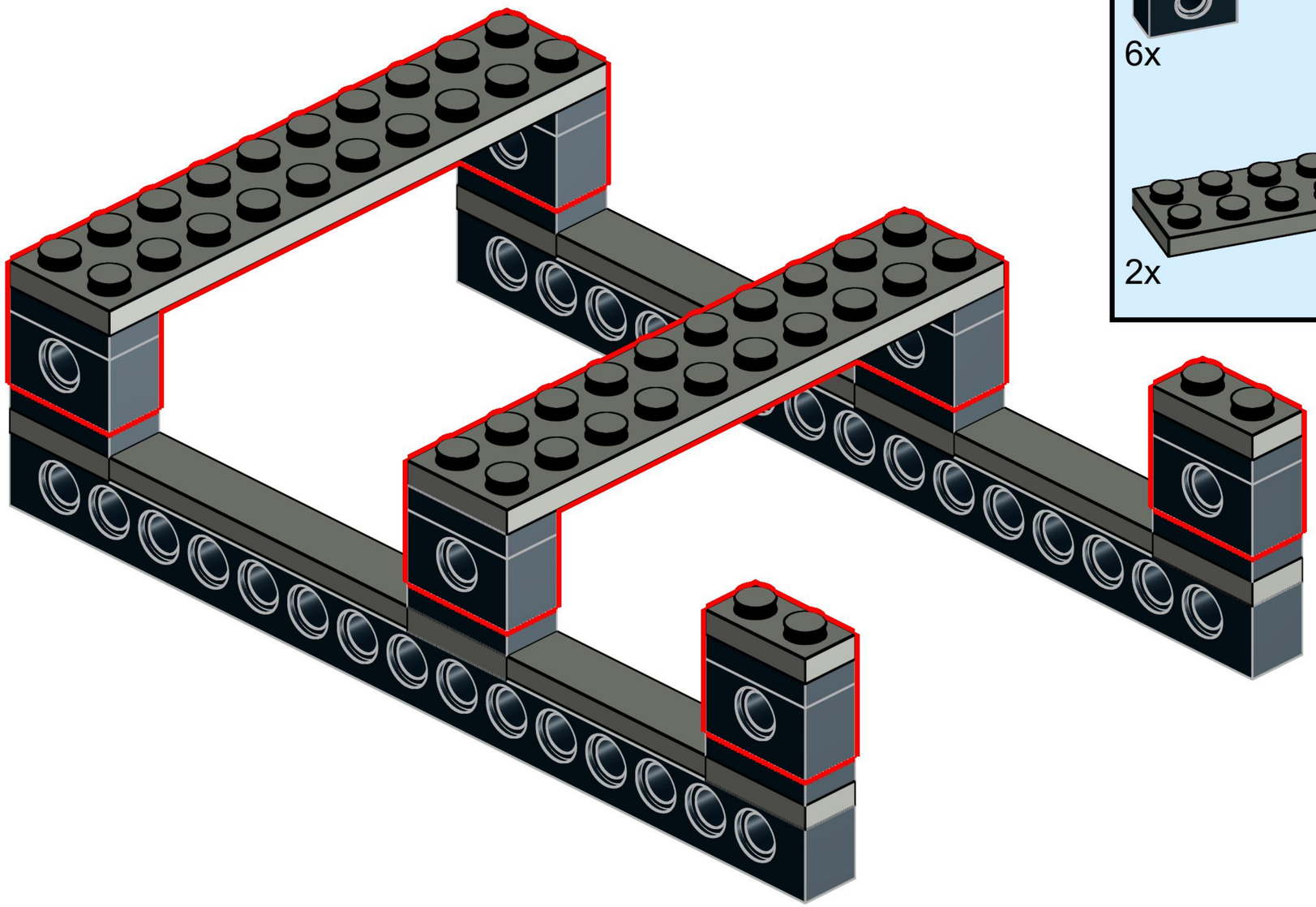

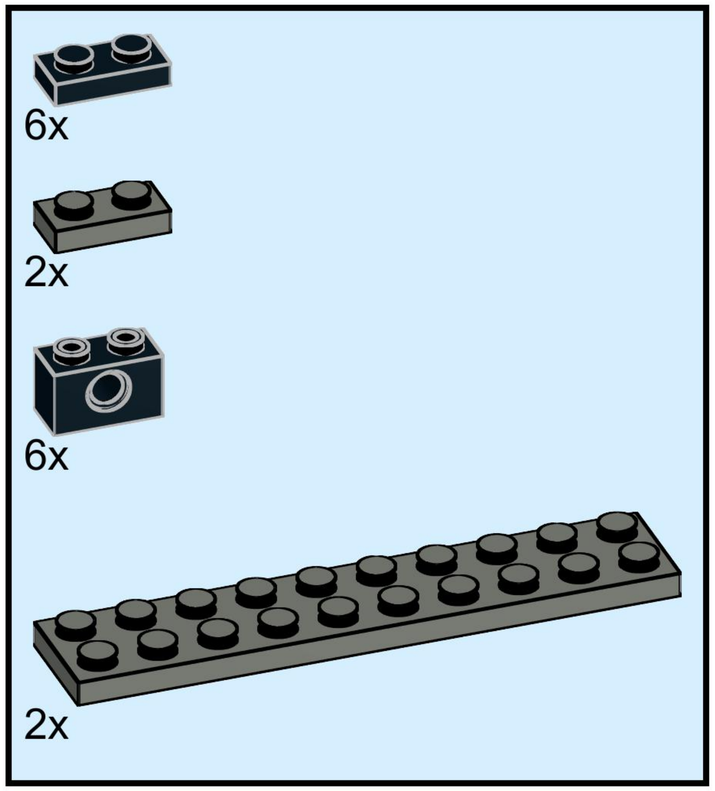

4

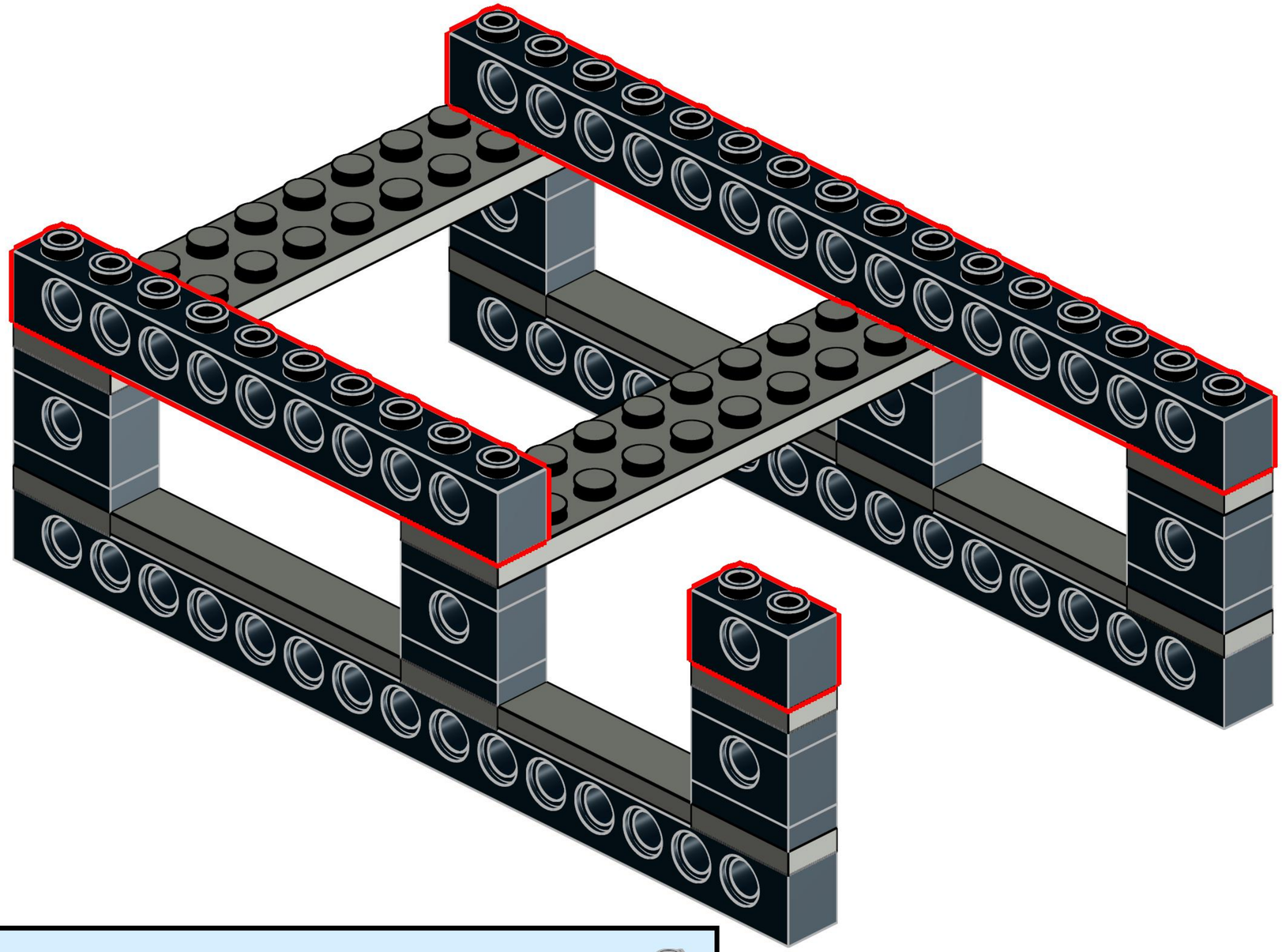

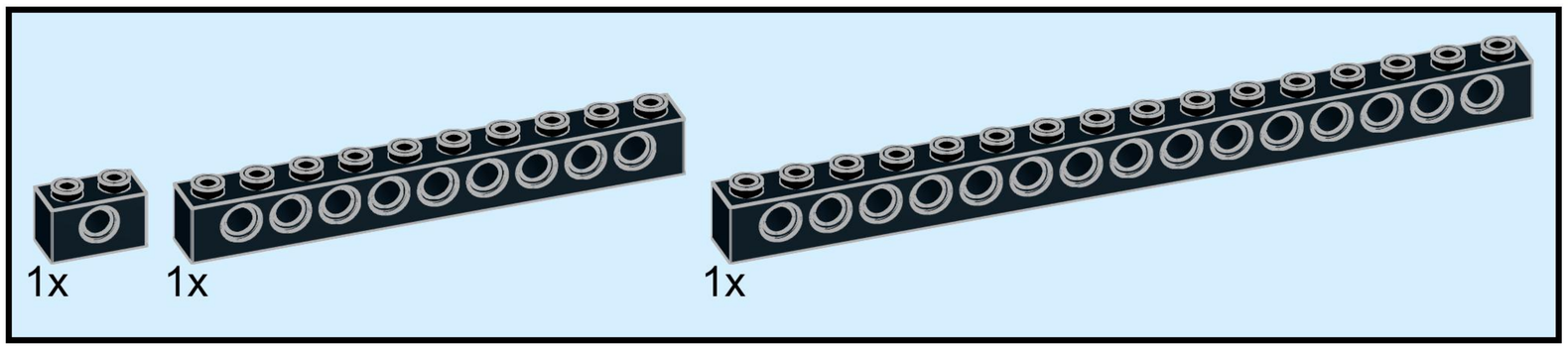

5

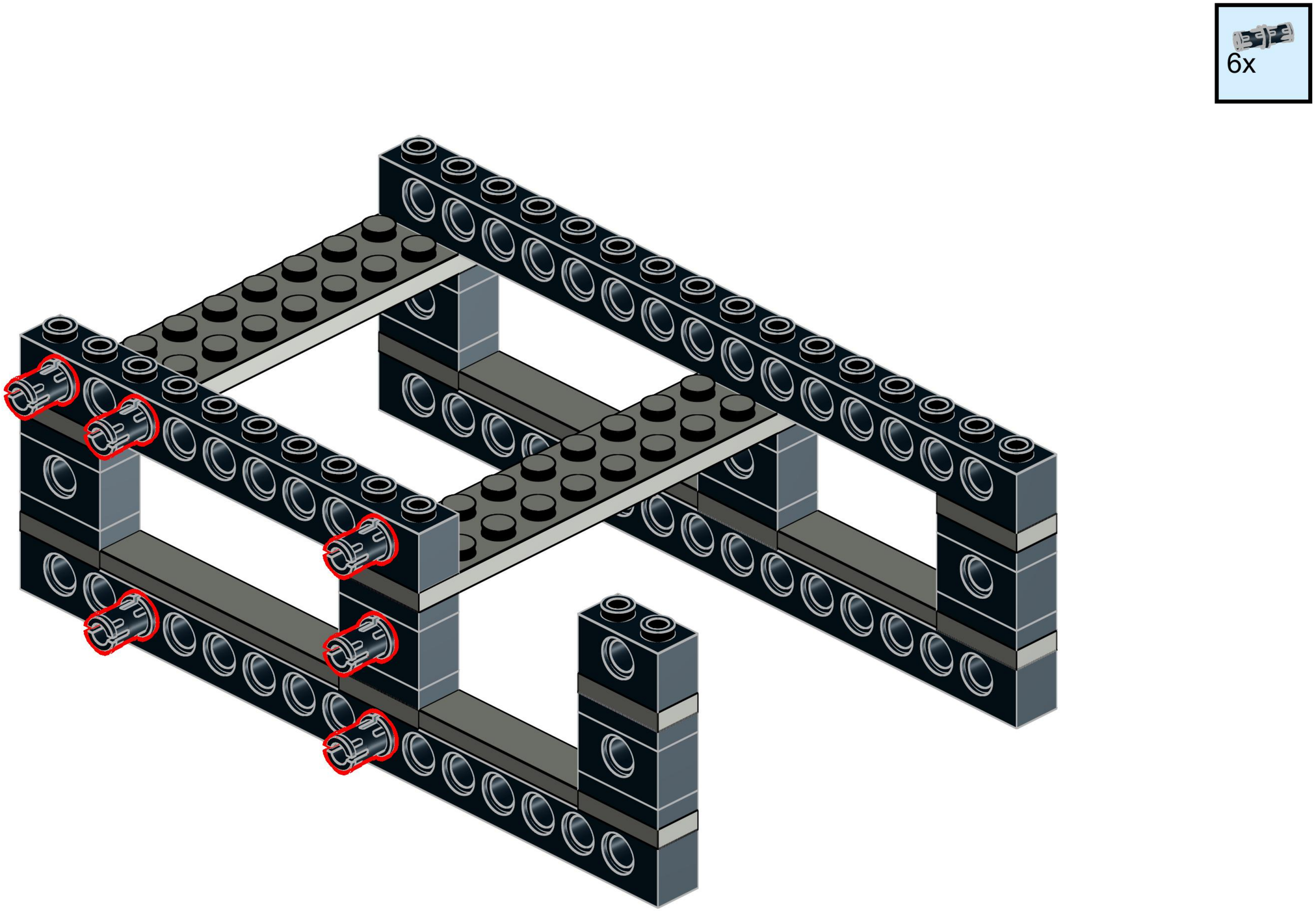

6

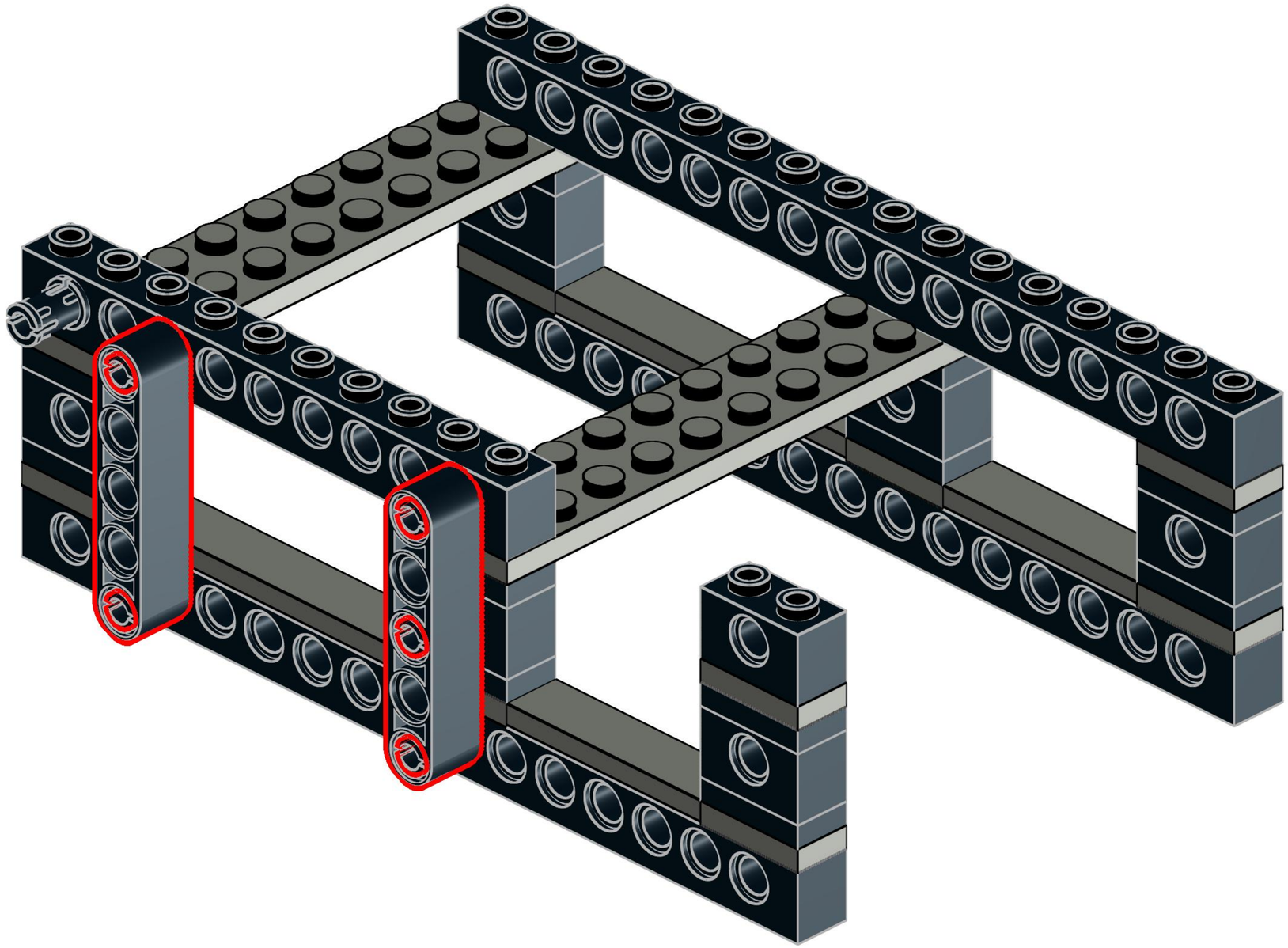

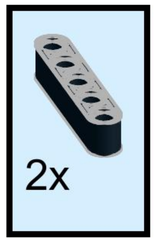

7

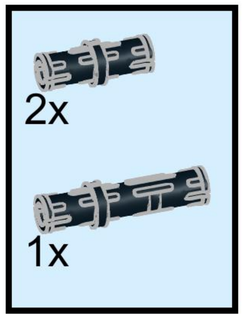

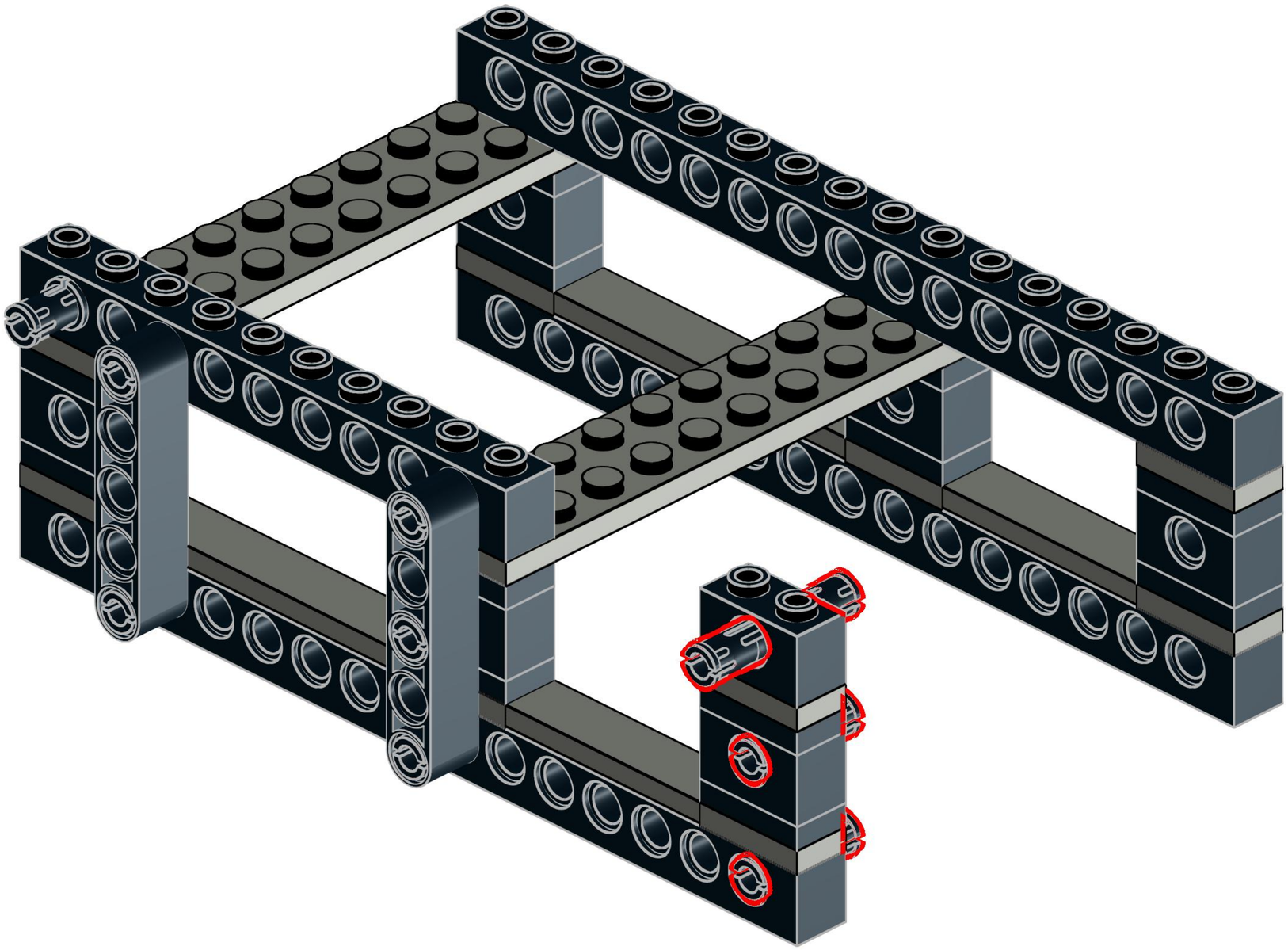

8

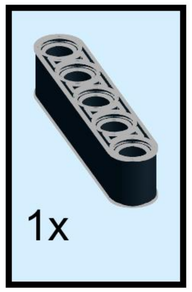

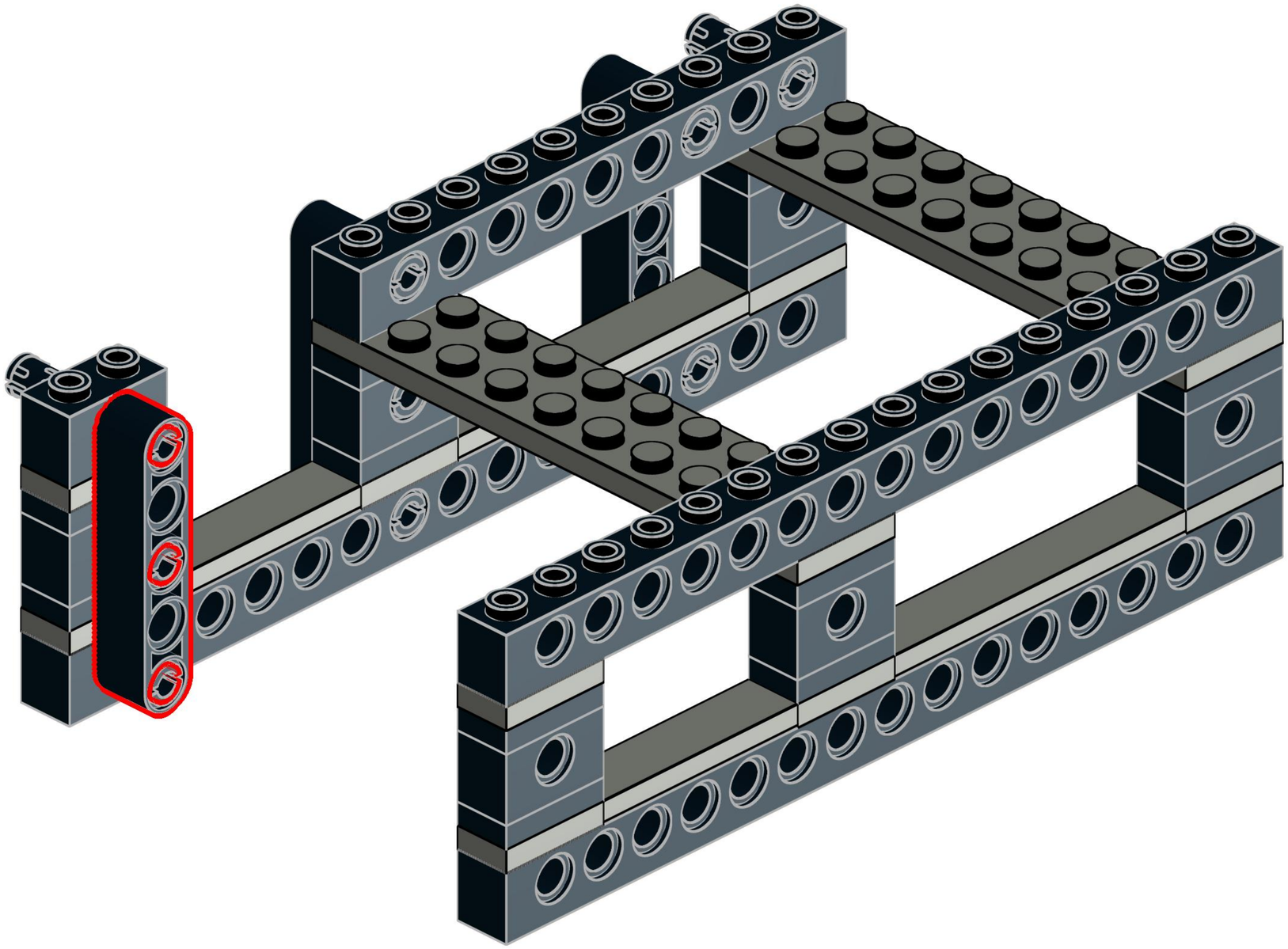

9

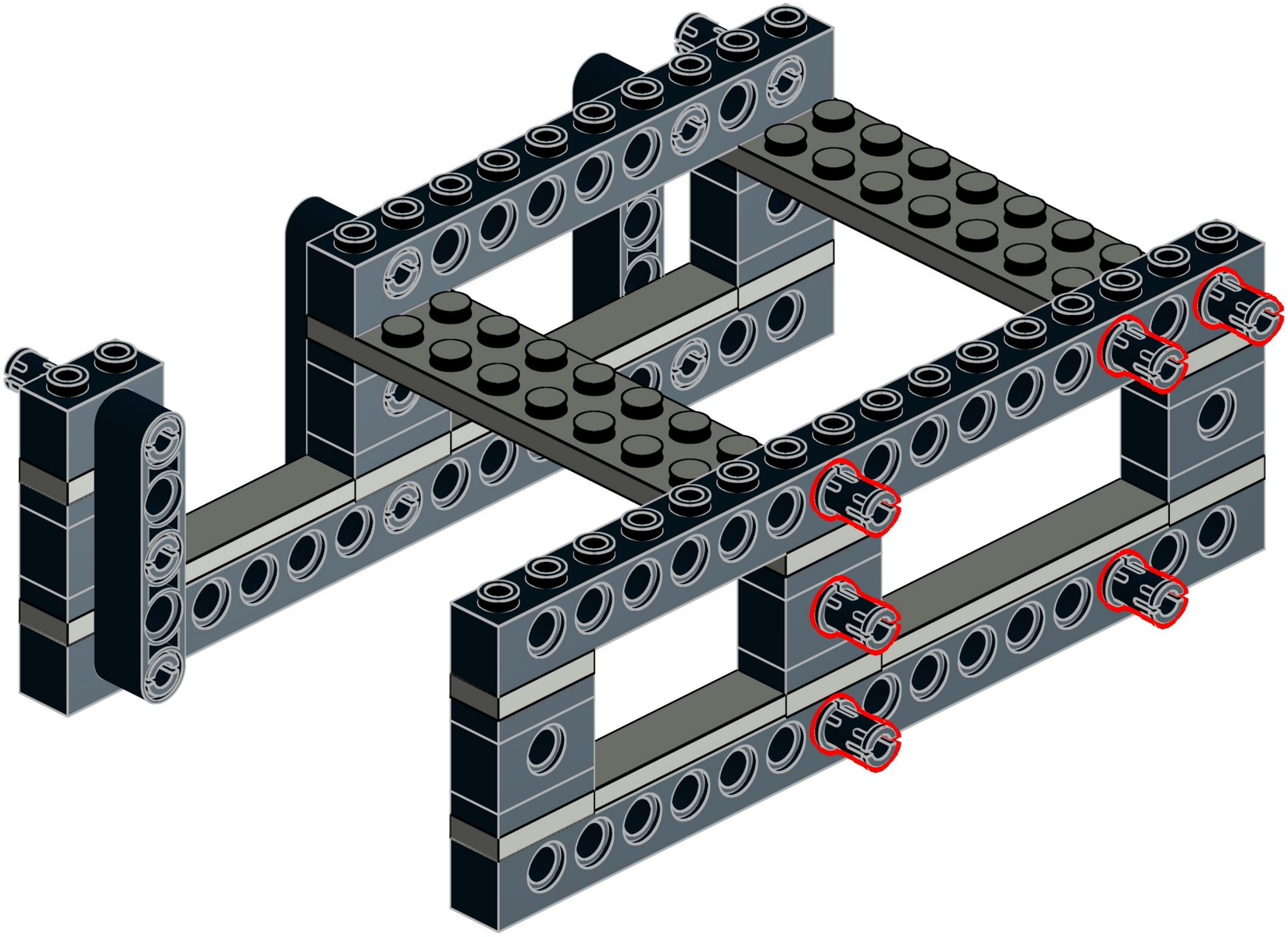

10

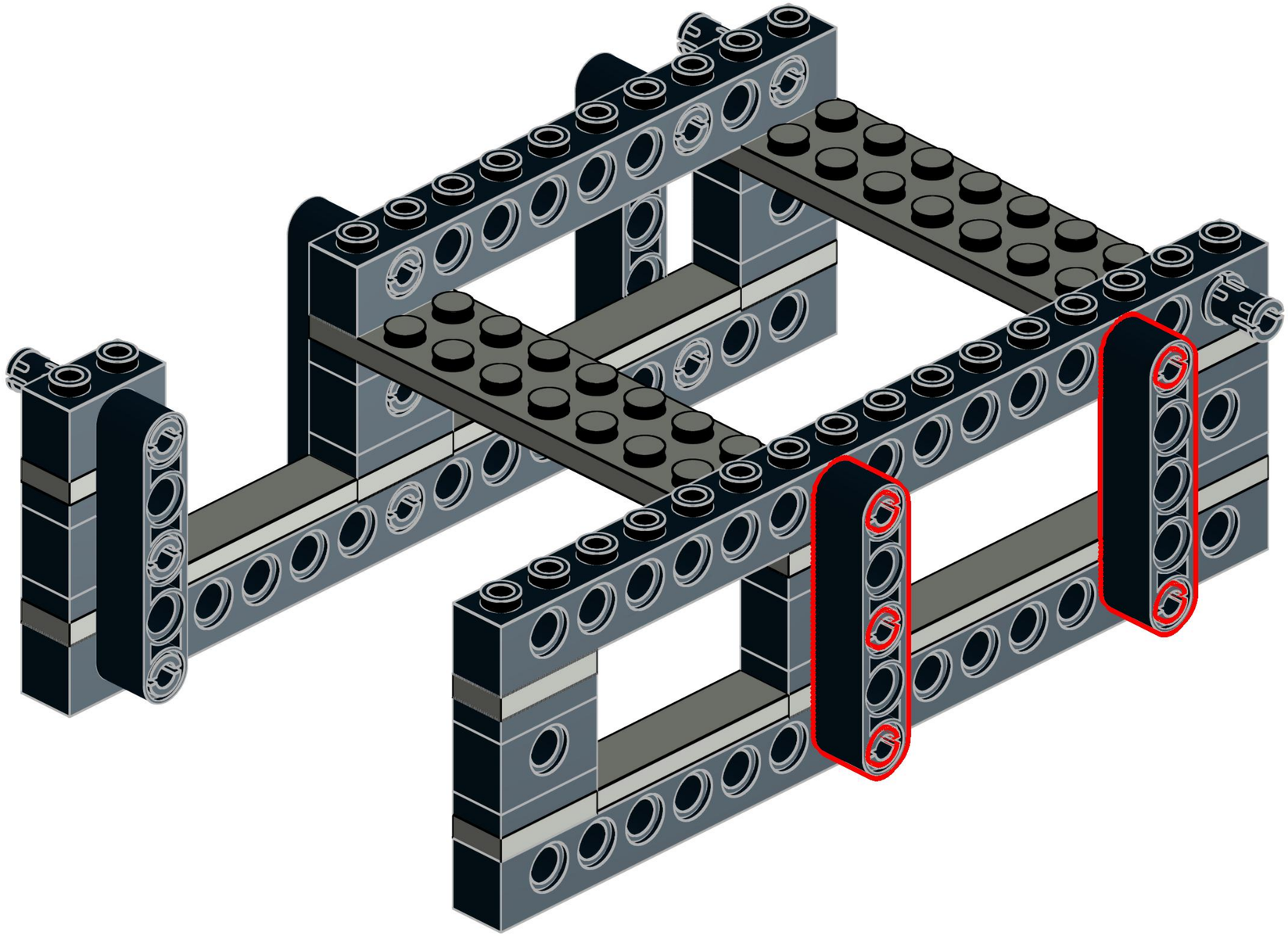

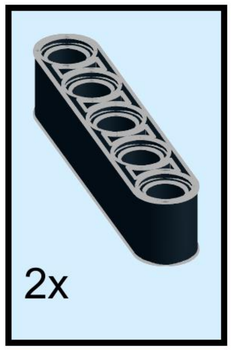

11

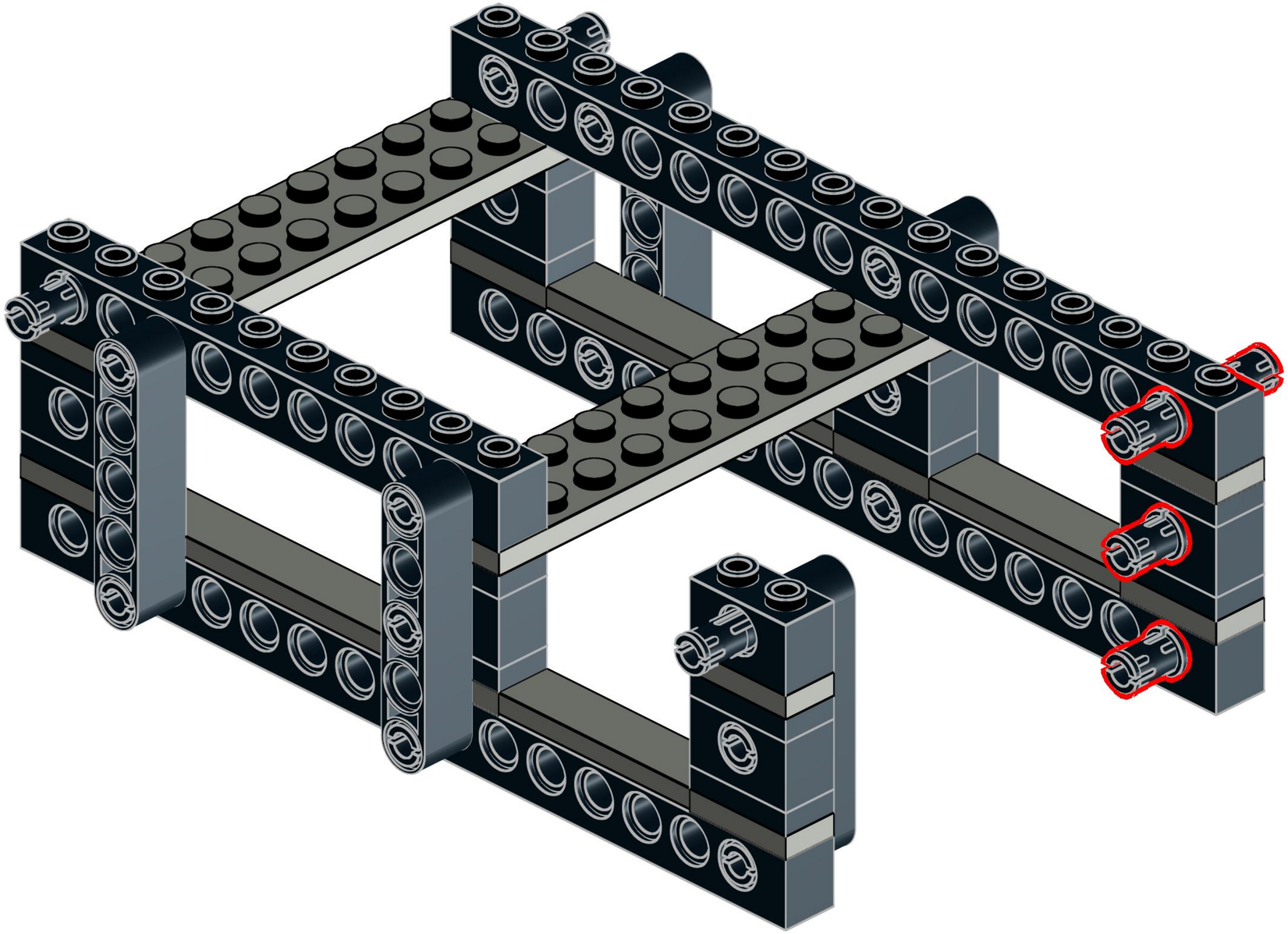

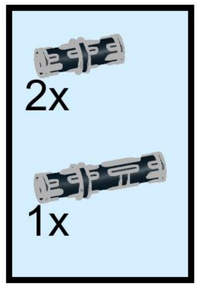

12

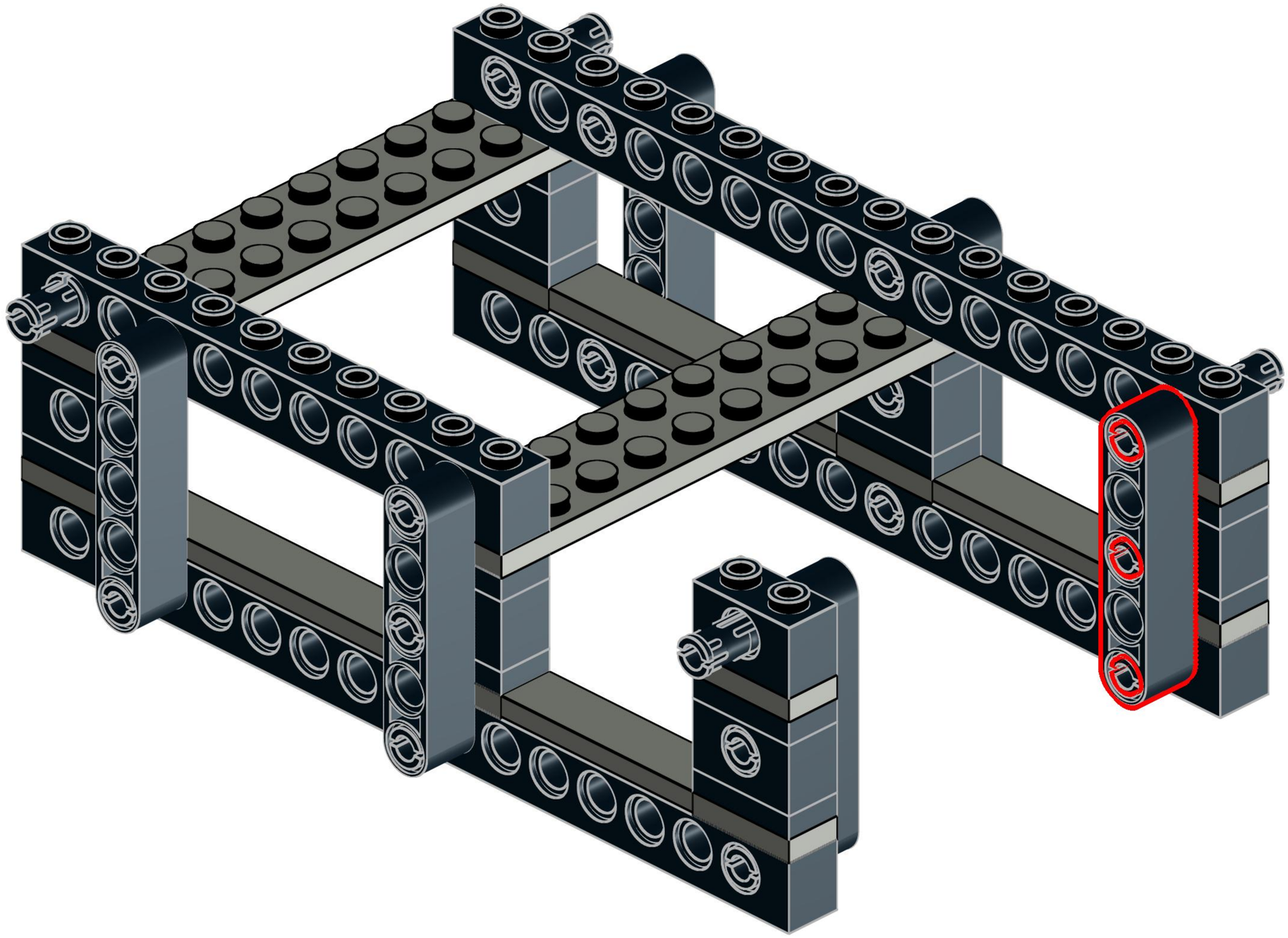

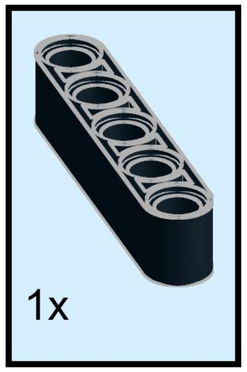

13

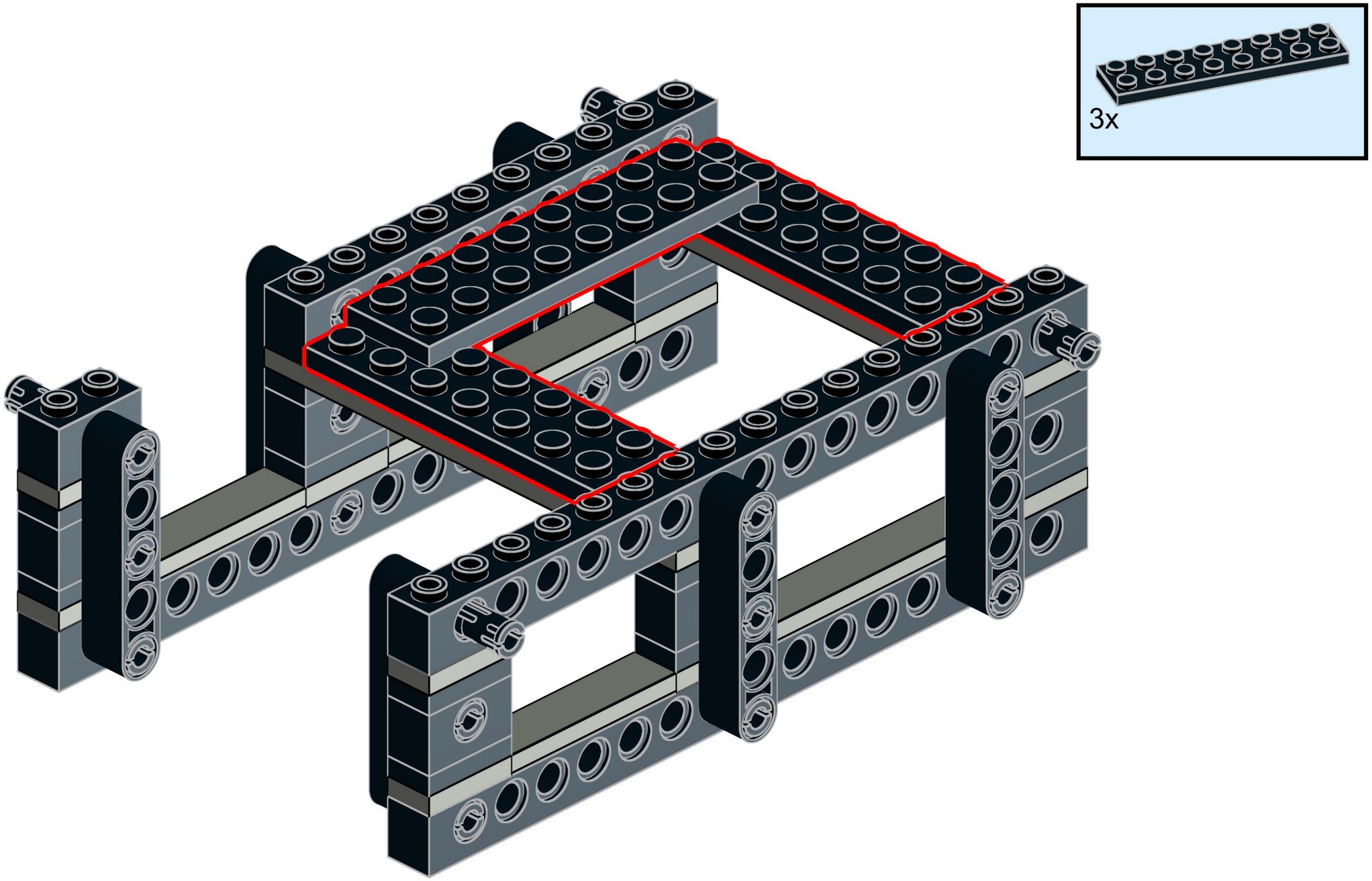

14

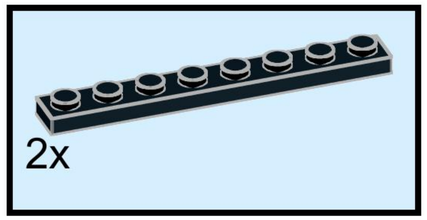

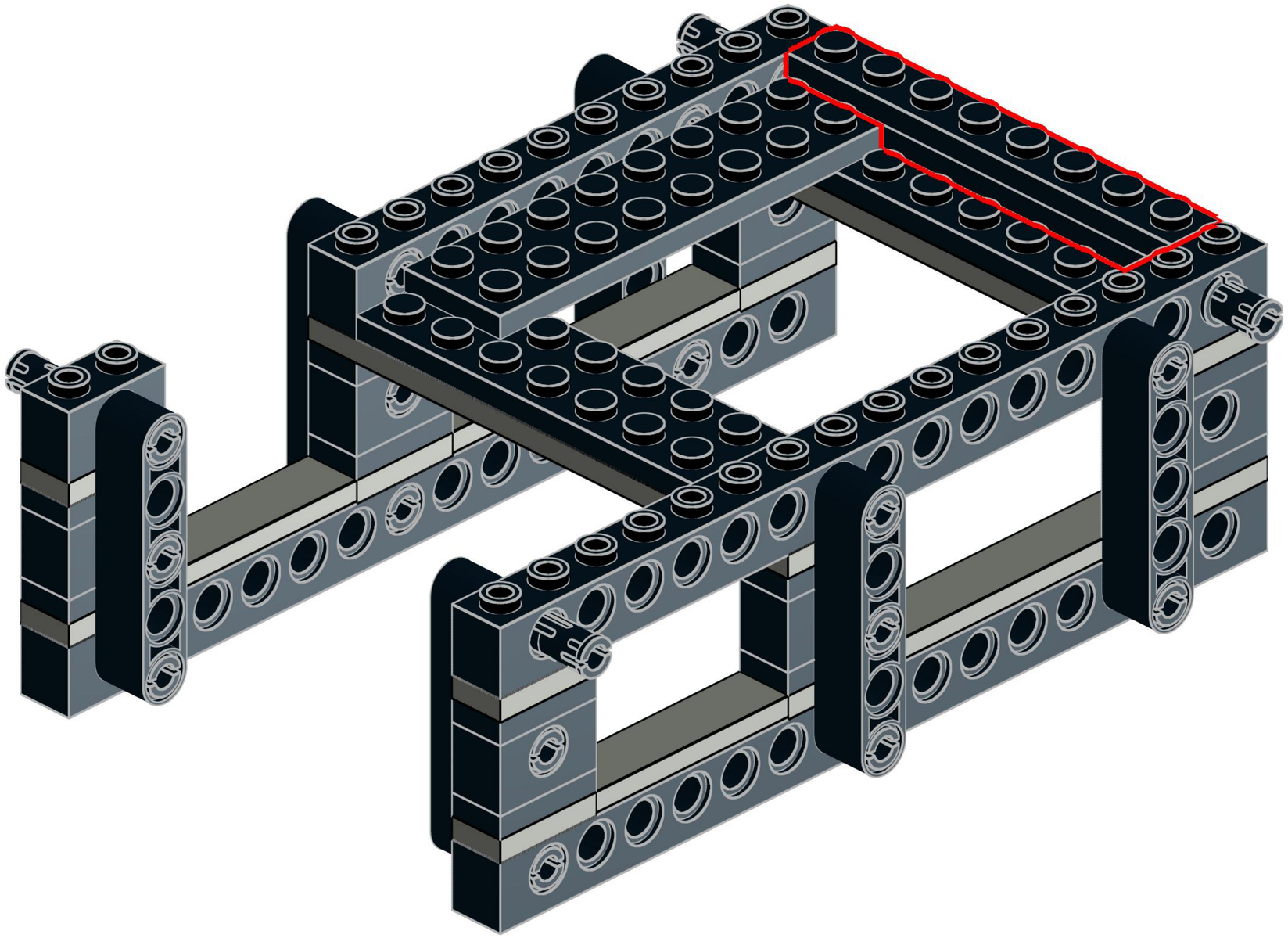

15

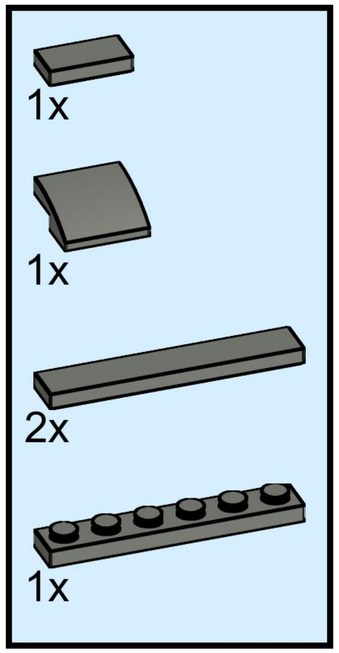

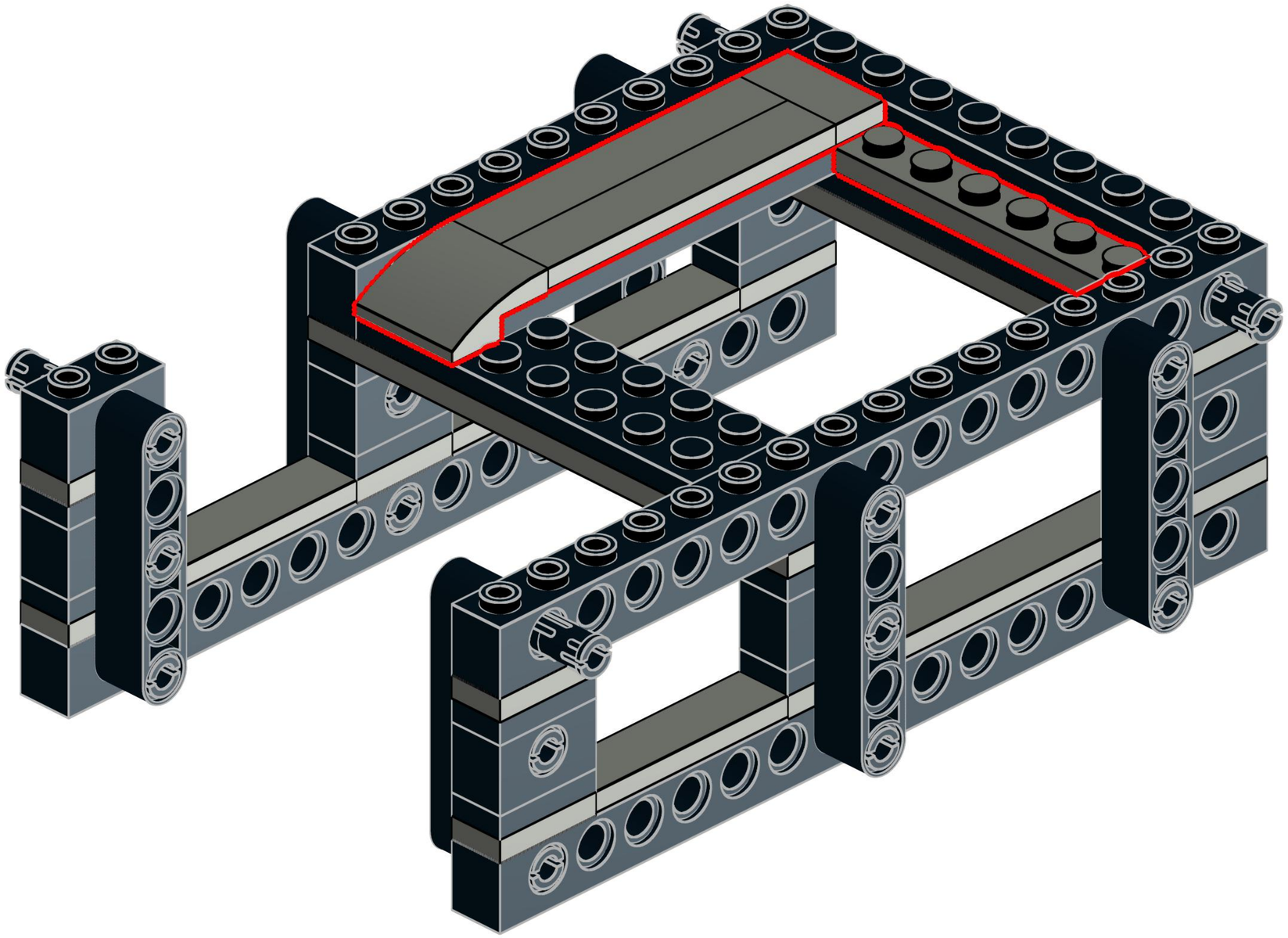

16

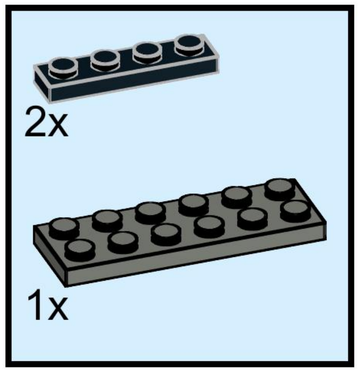

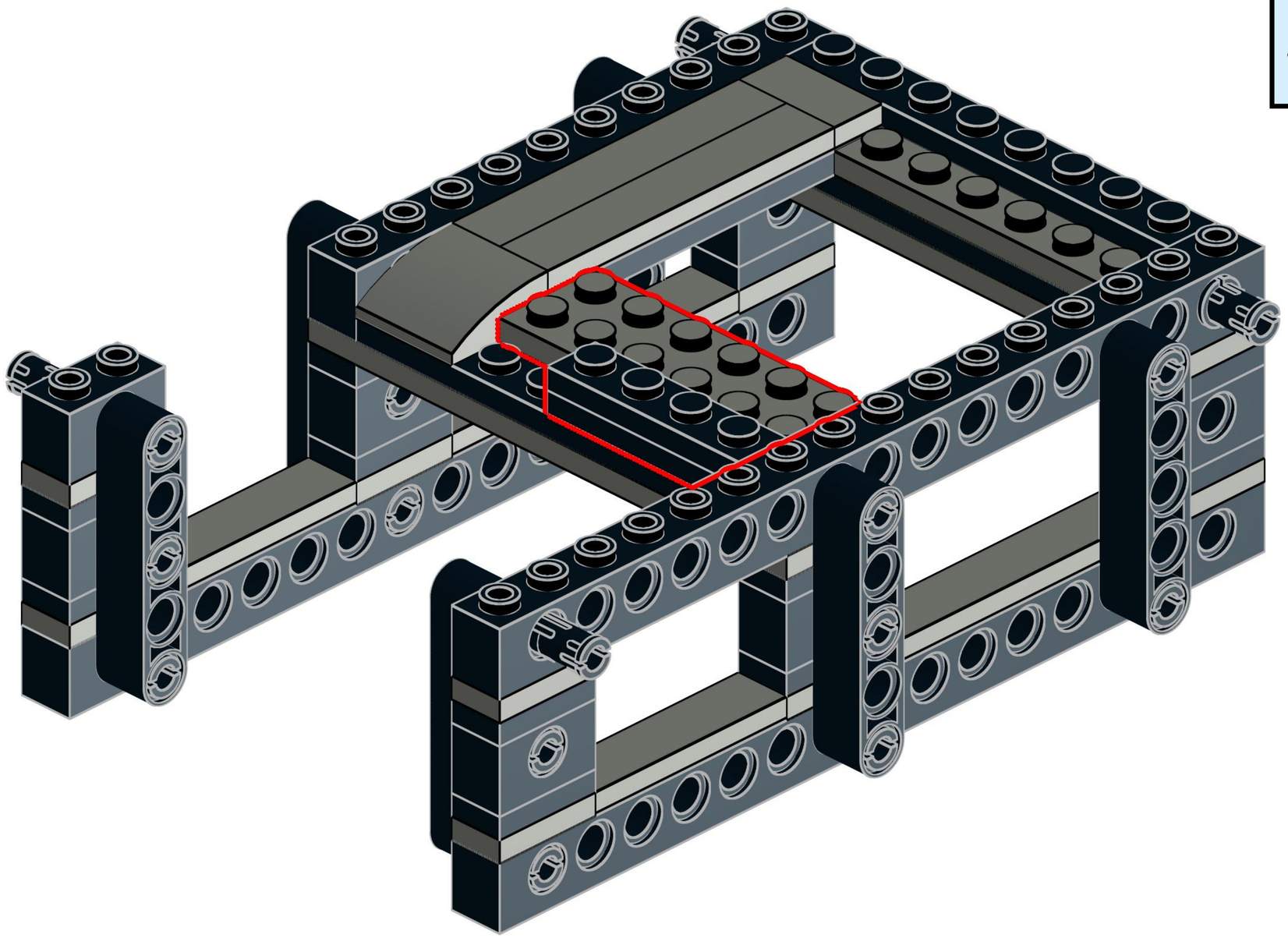

17

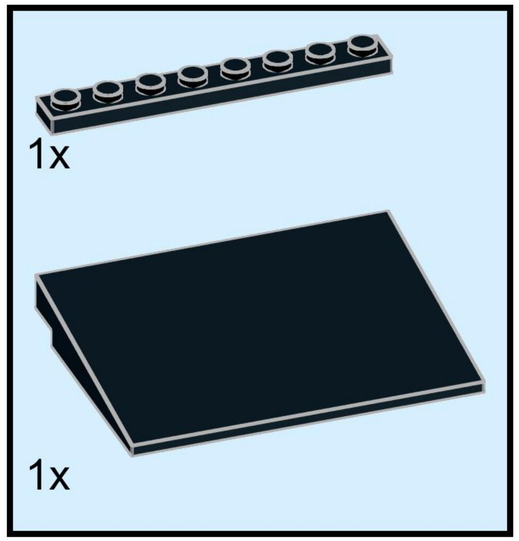

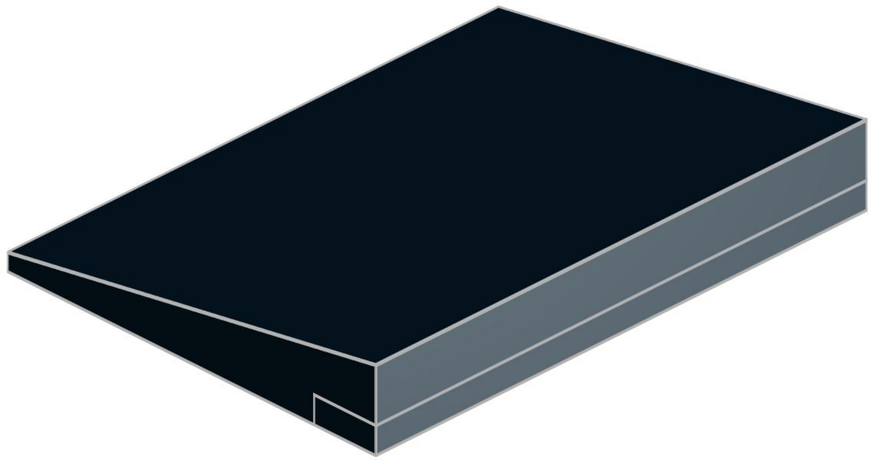

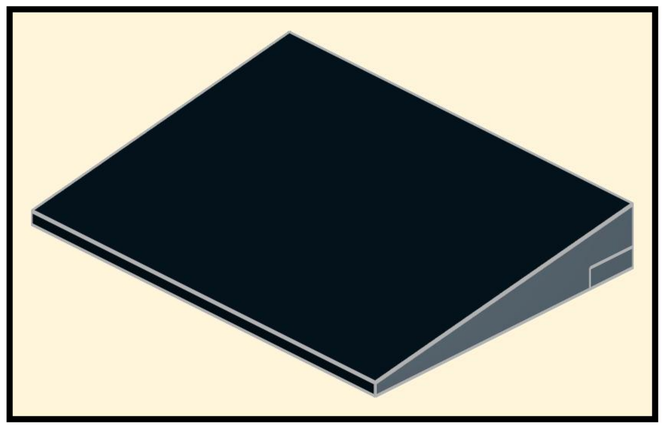

18

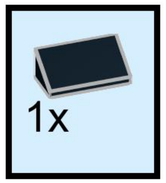

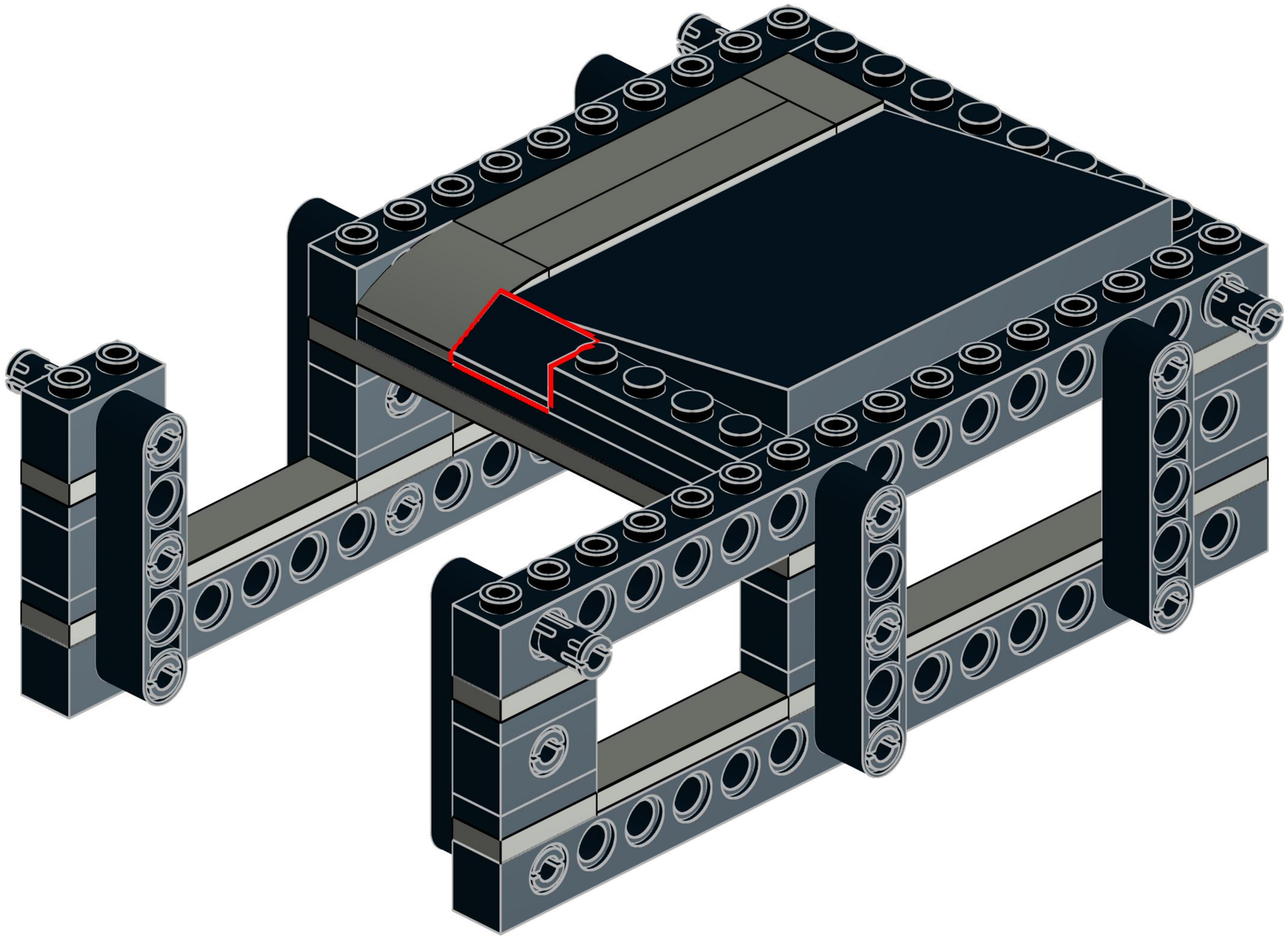

19

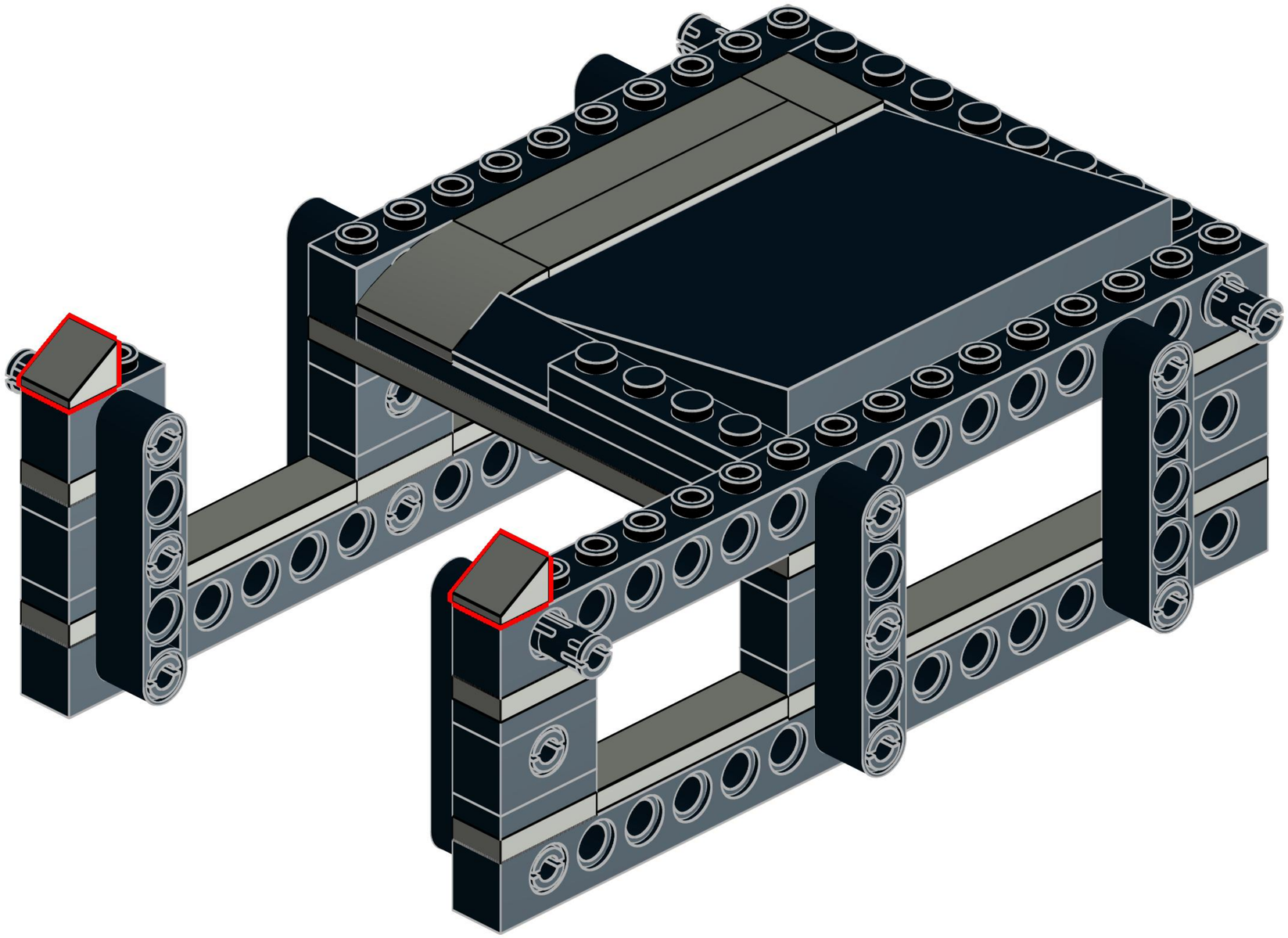

2x

20

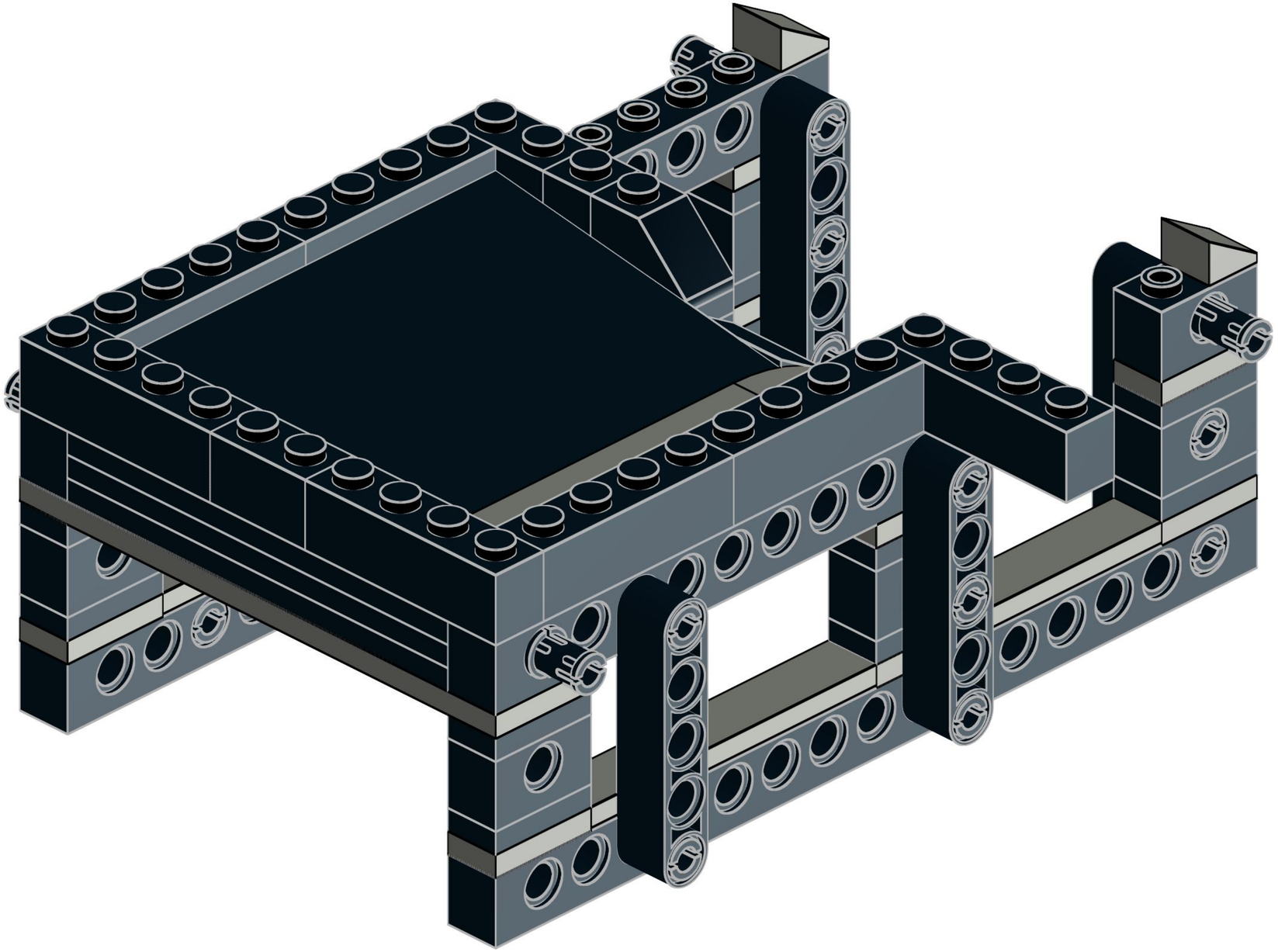

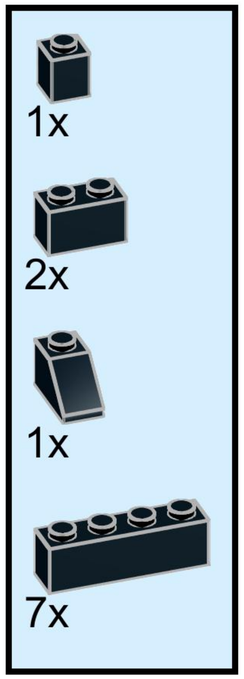

21

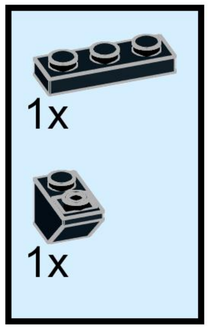

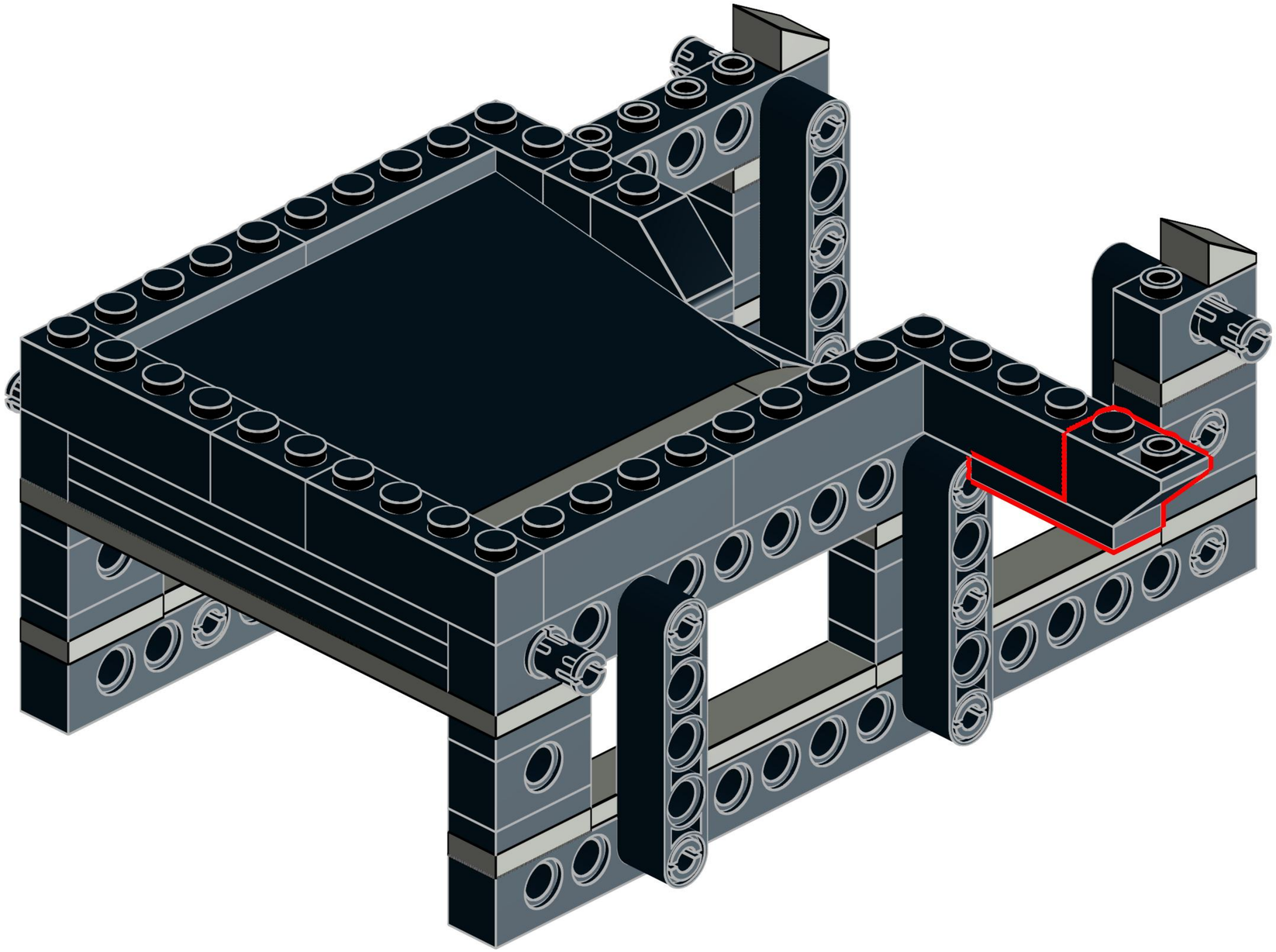

22

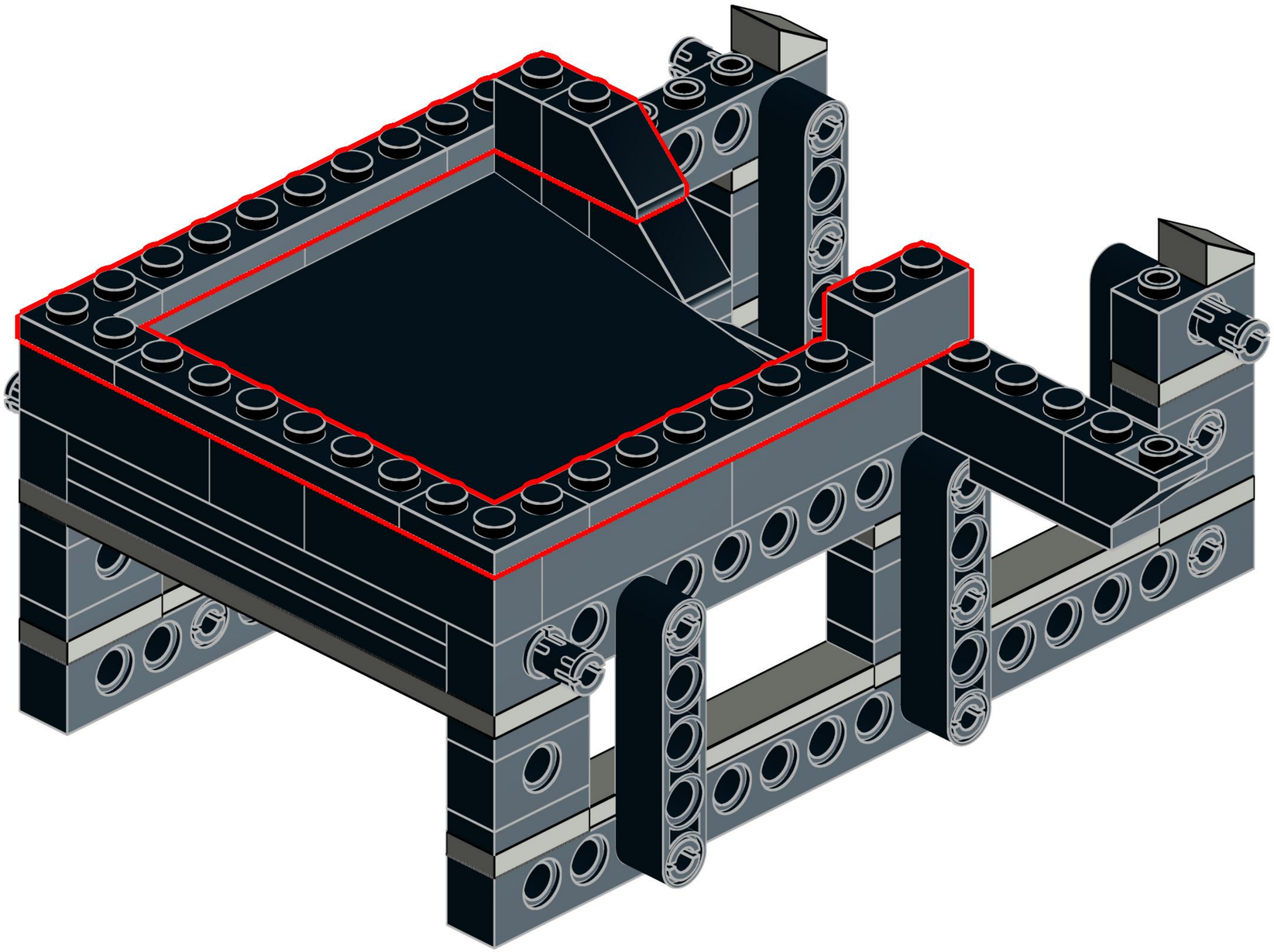

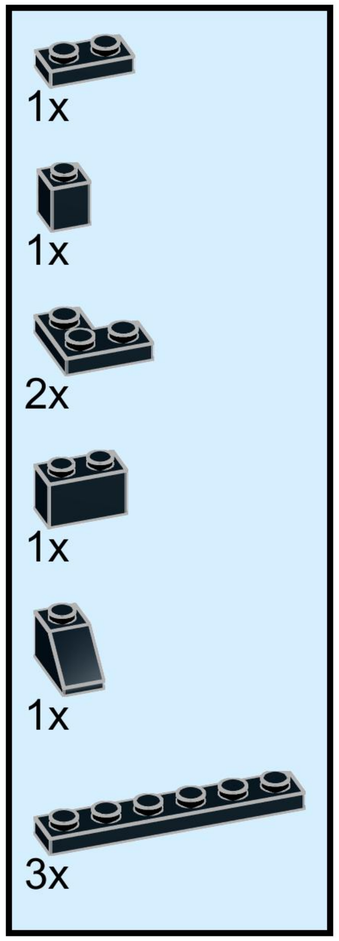

23

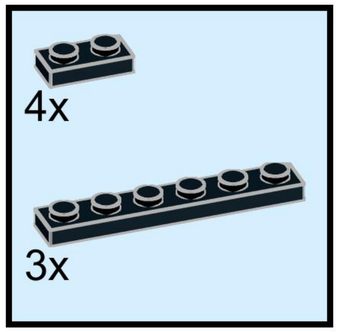

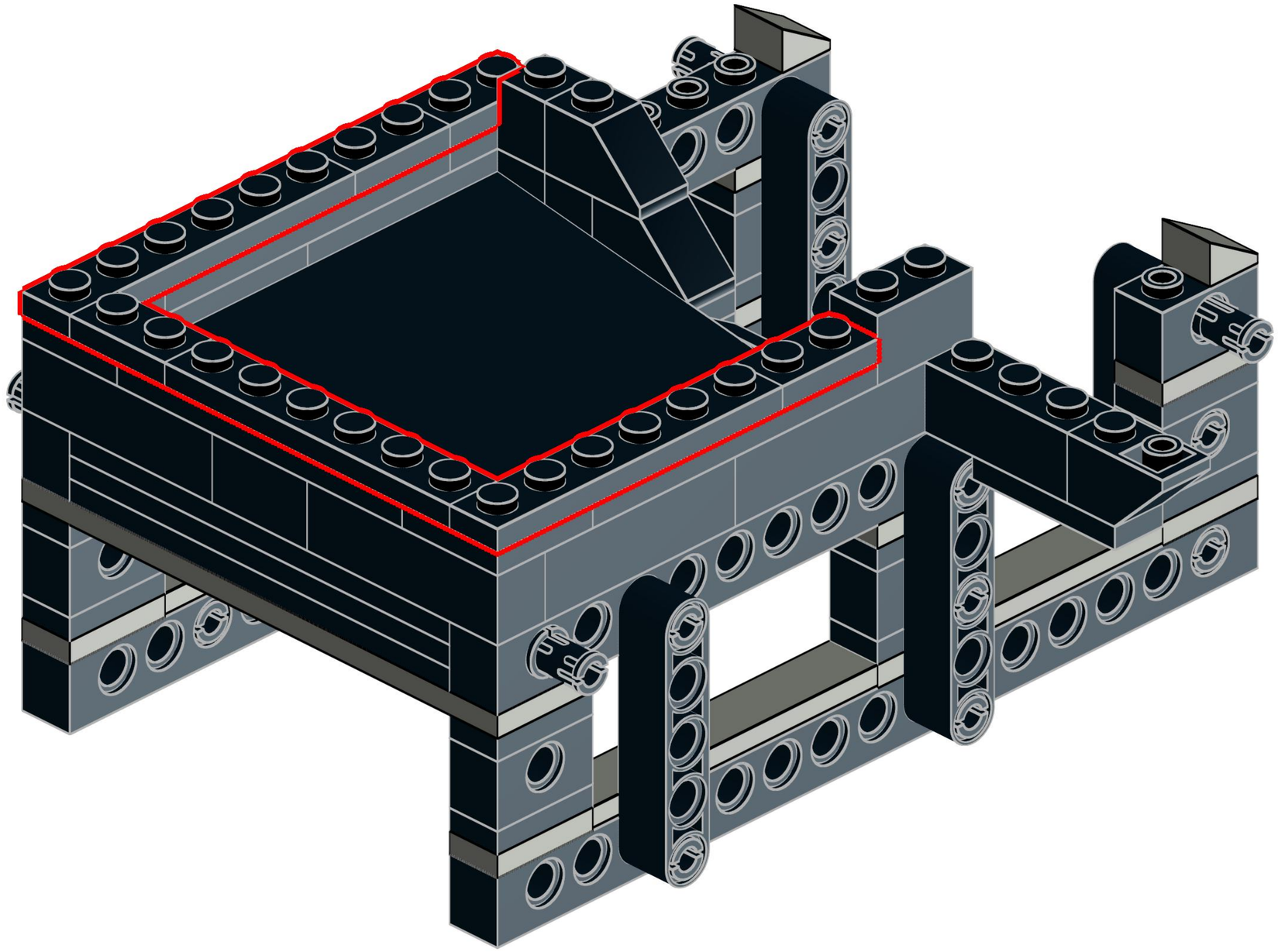

24

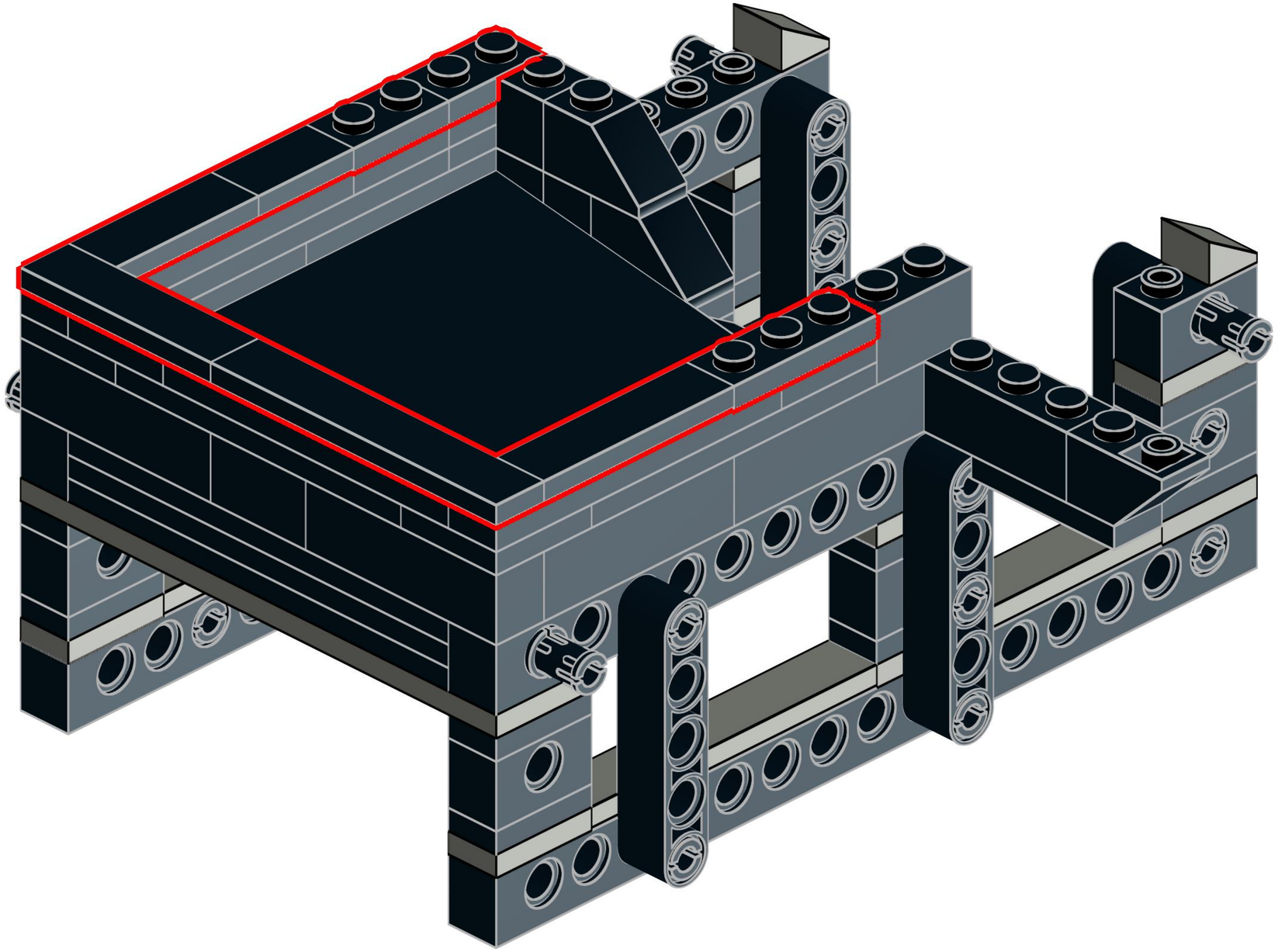

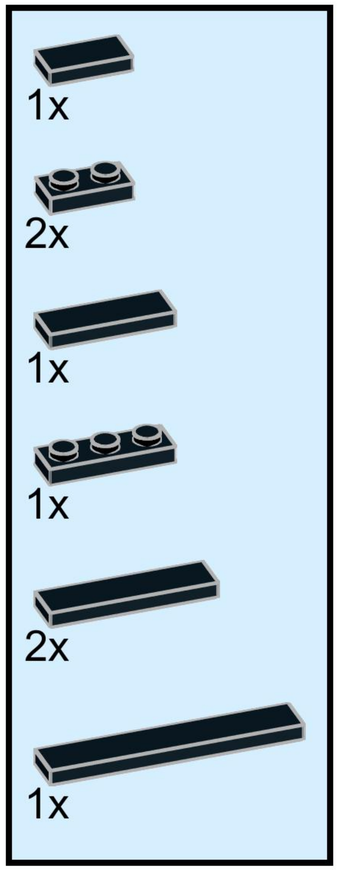

25

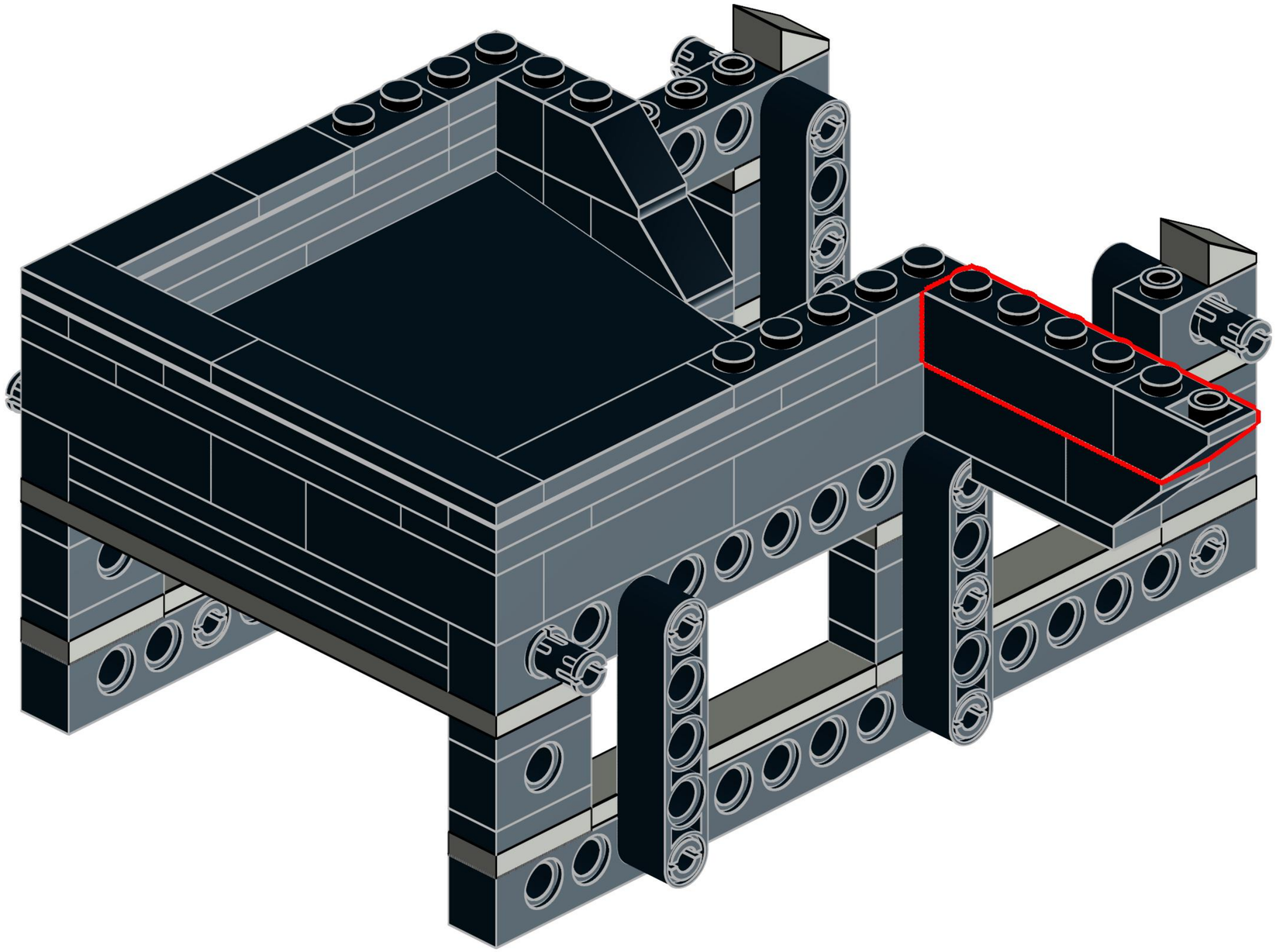

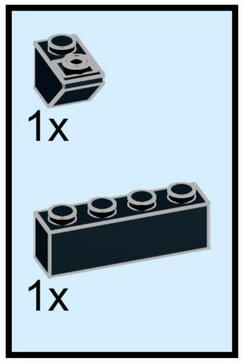

26

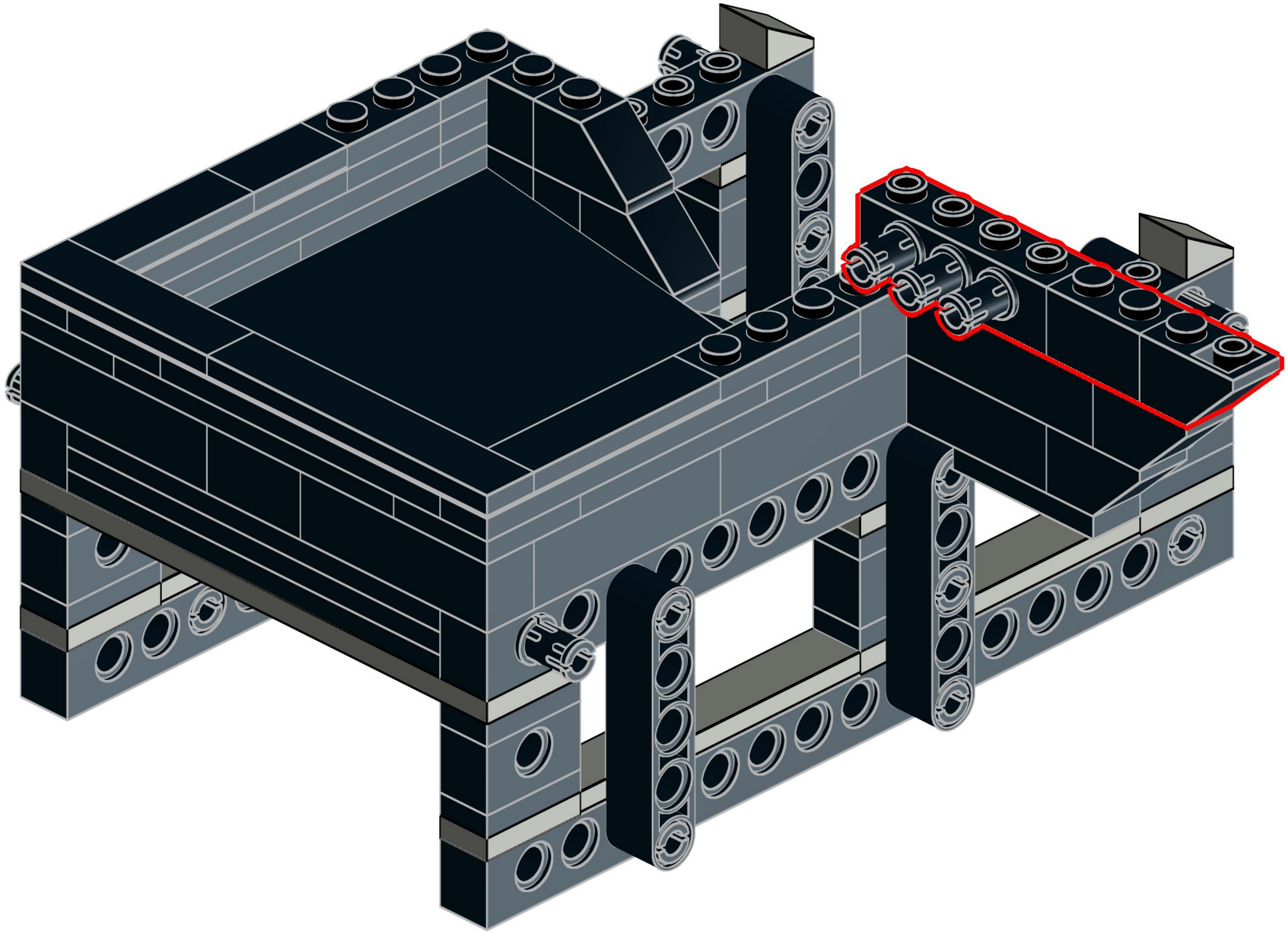

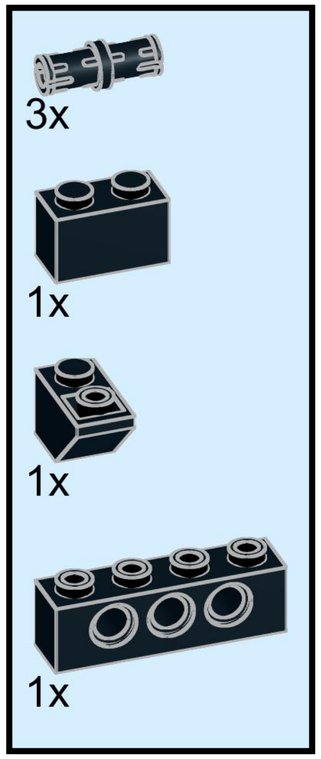

27

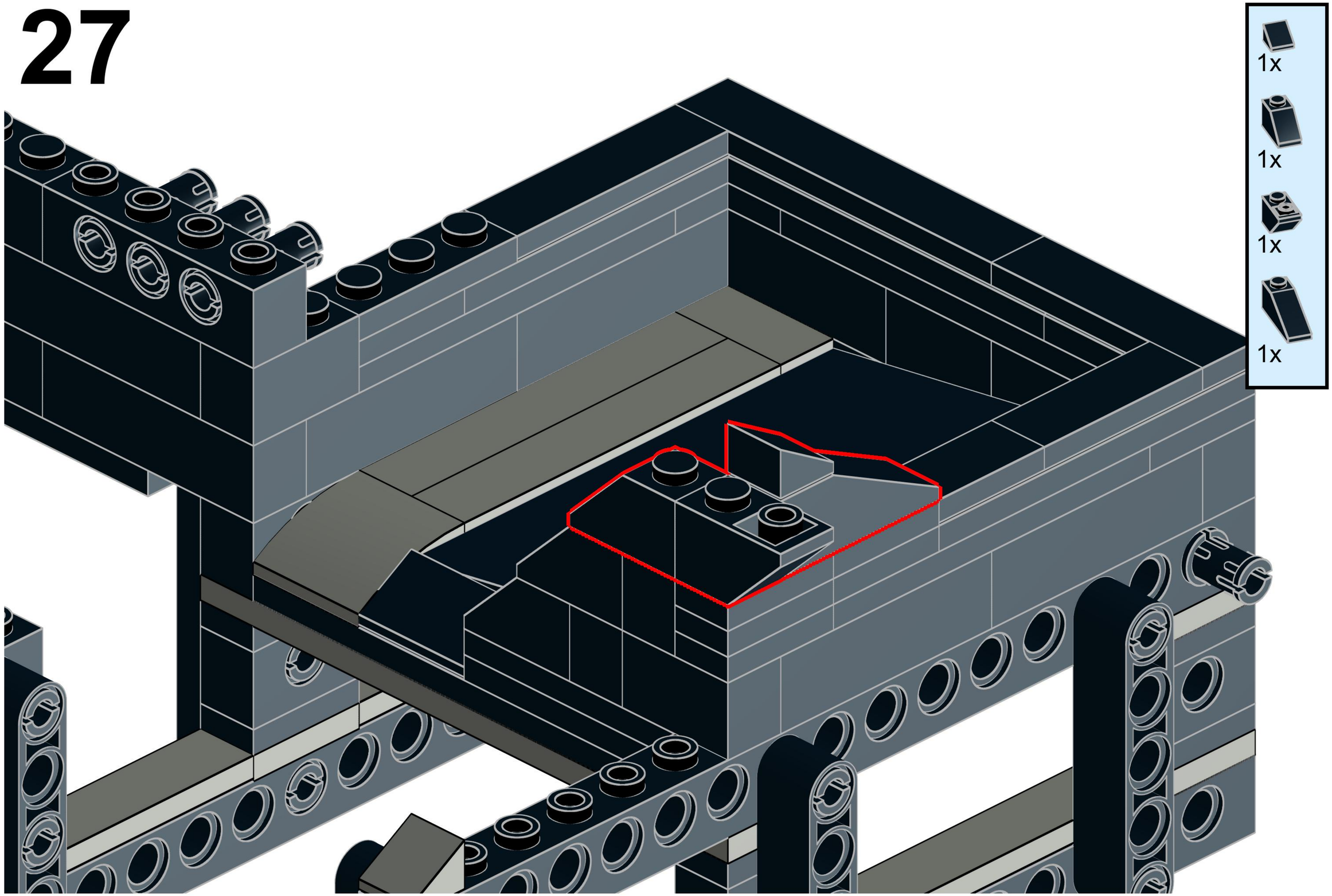

28

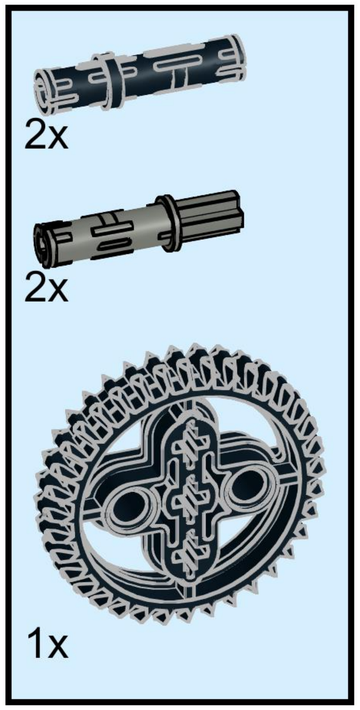

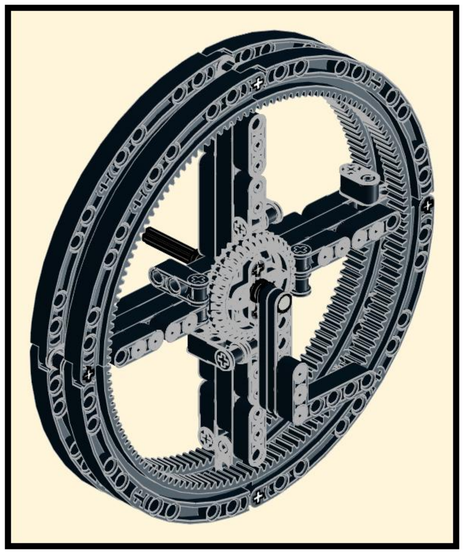

29

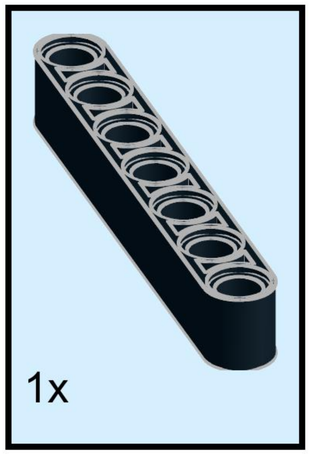

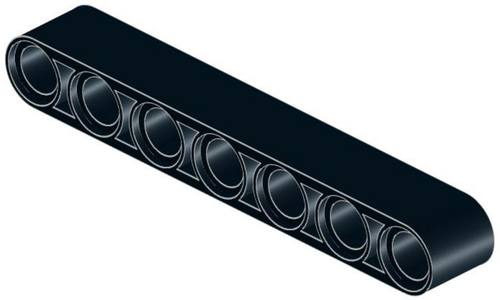

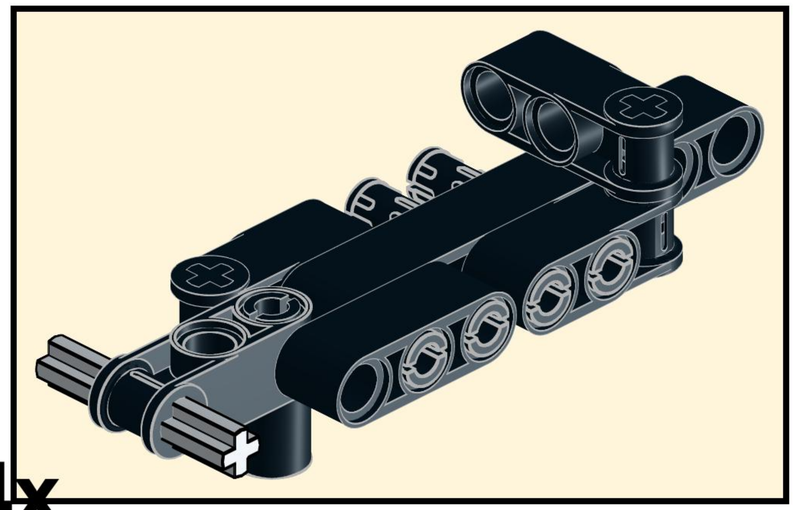

30

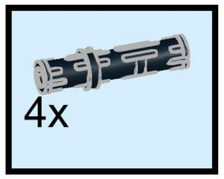

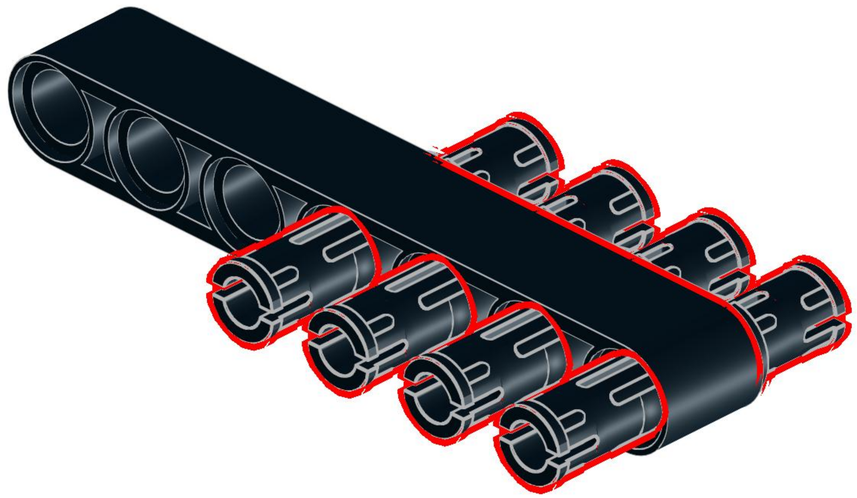

31

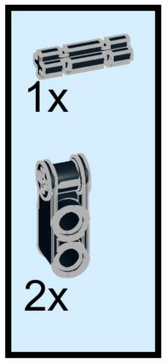

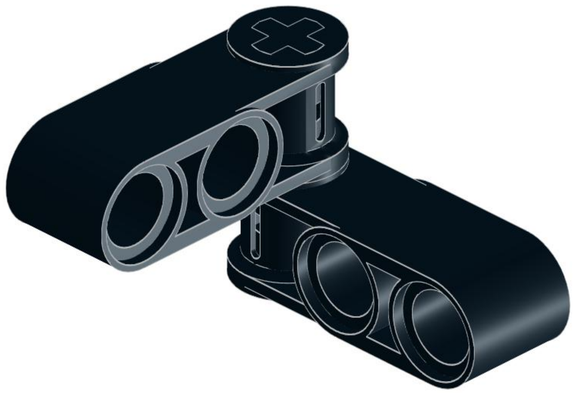

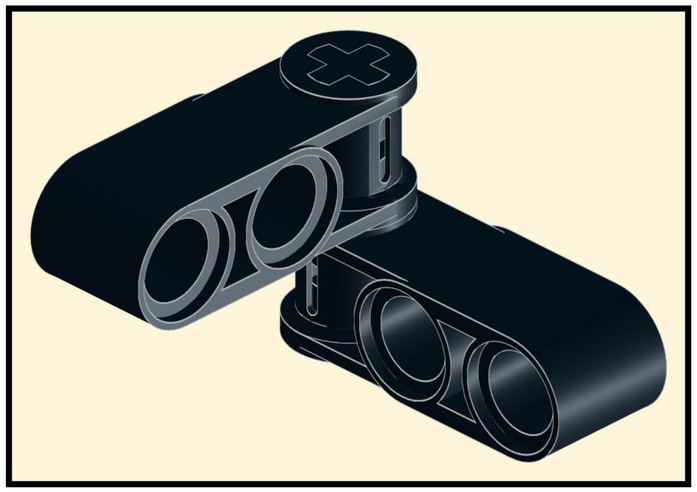

32

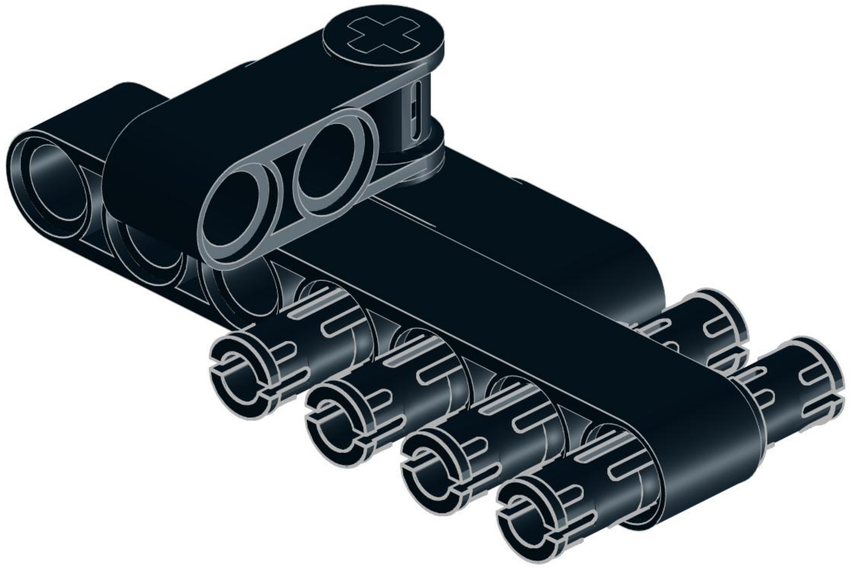

33

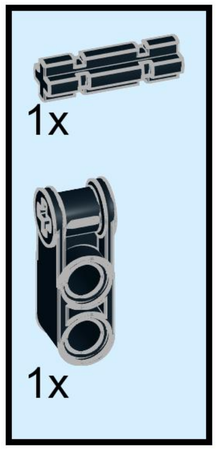

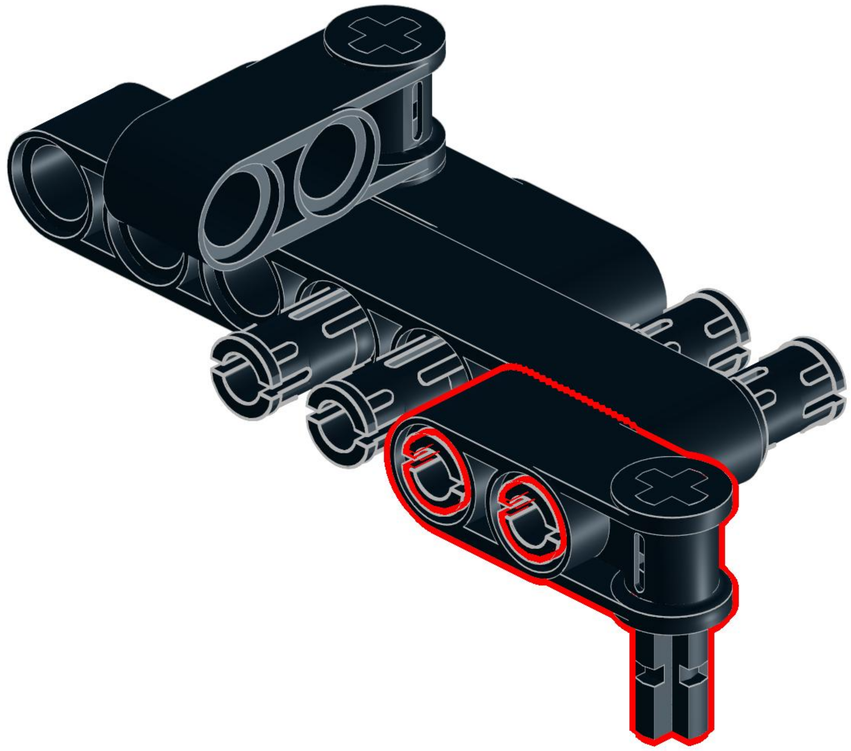

34

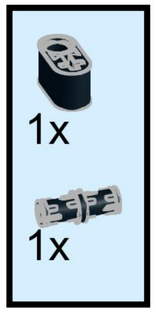

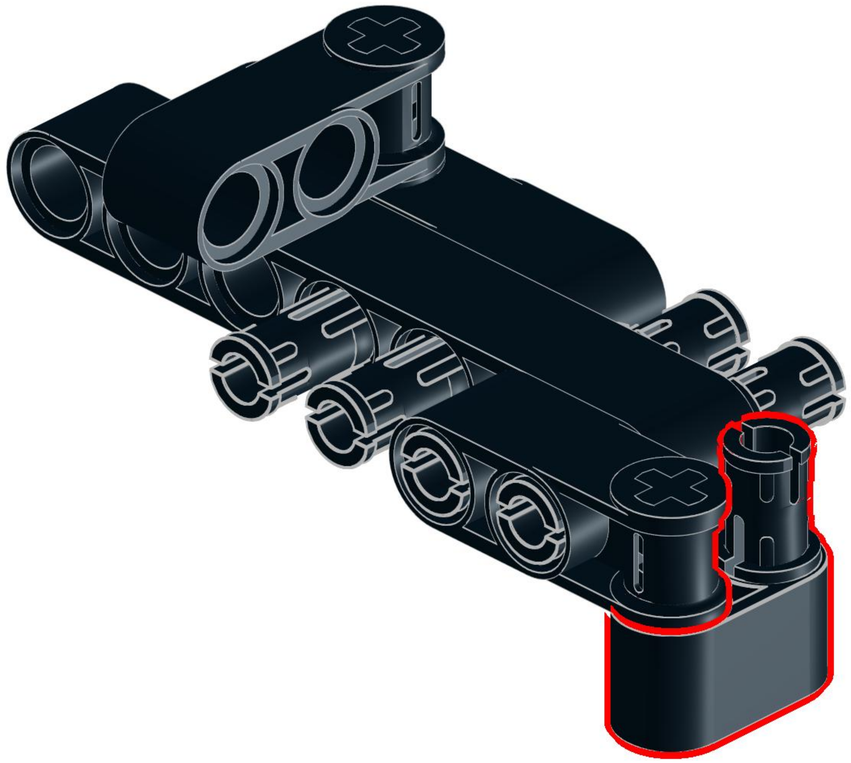

35

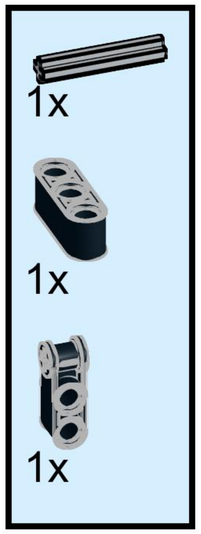

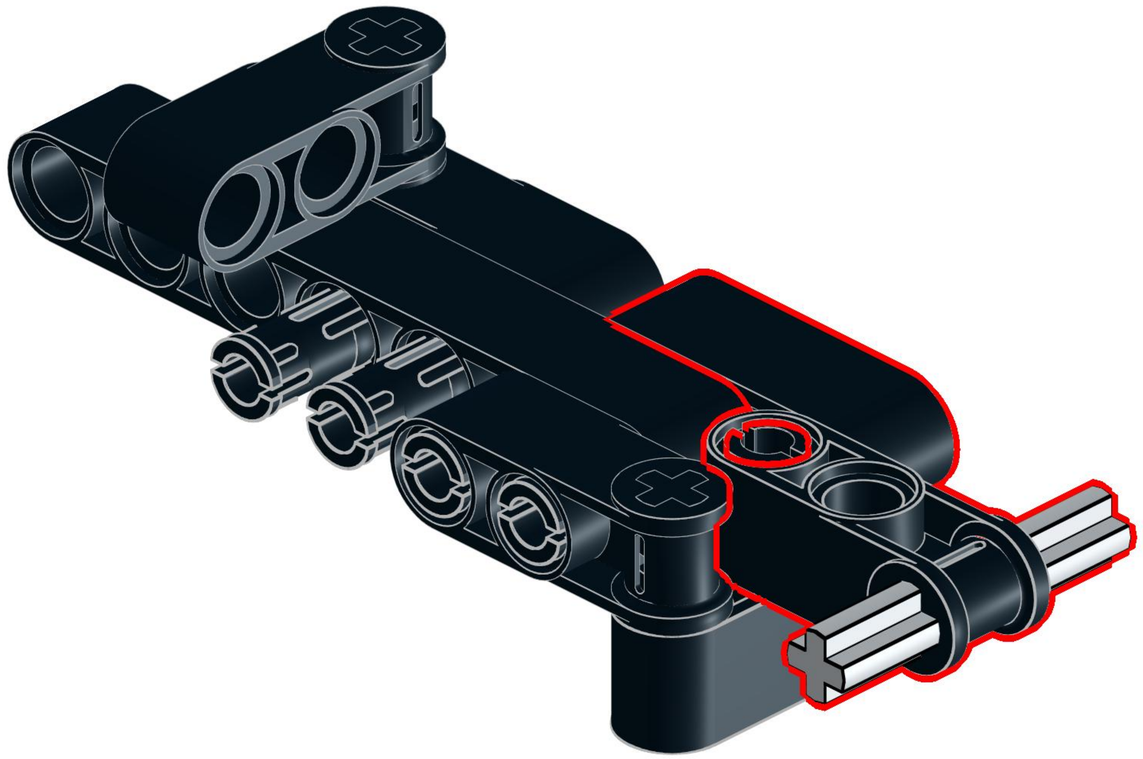

36

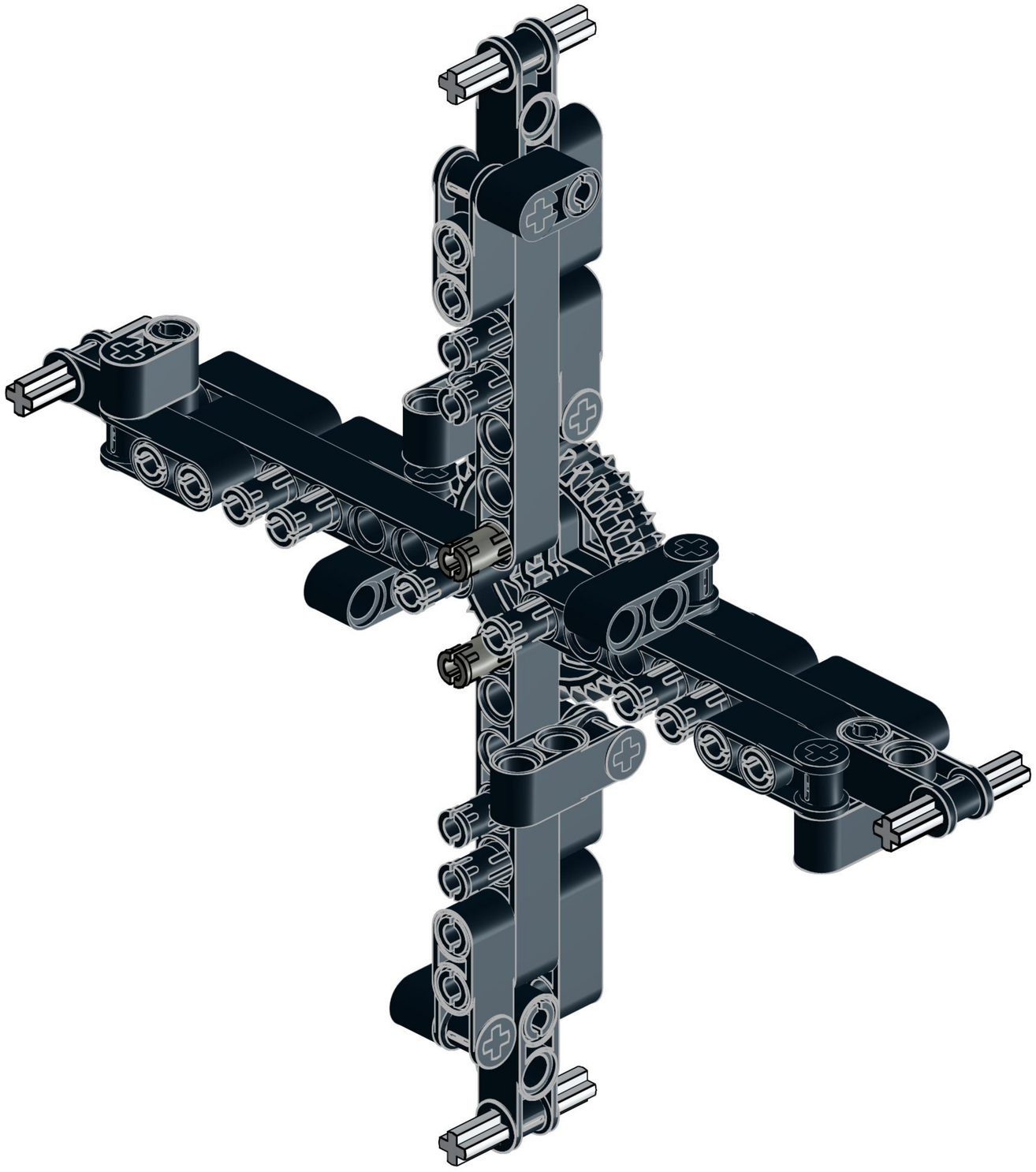

37

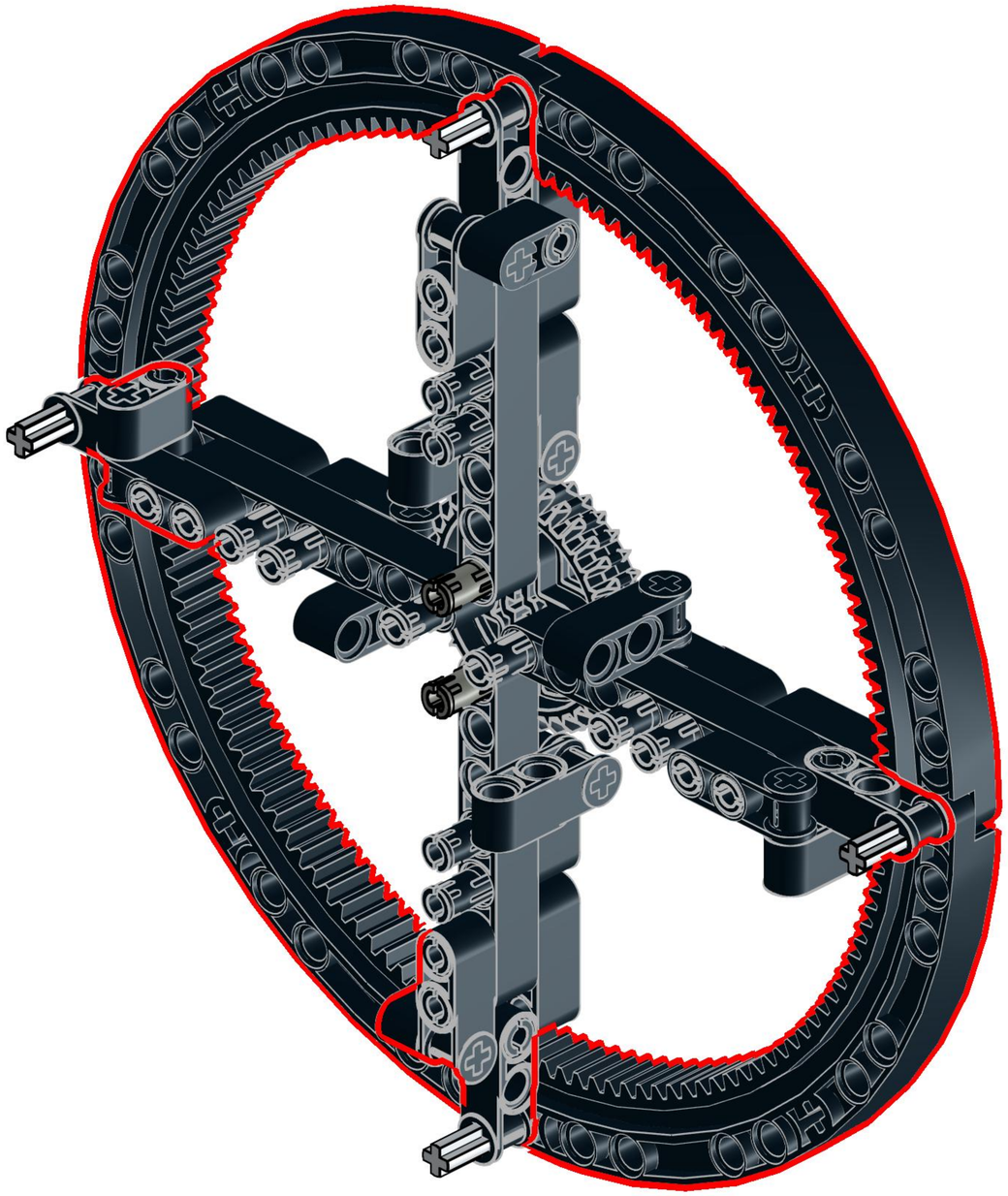

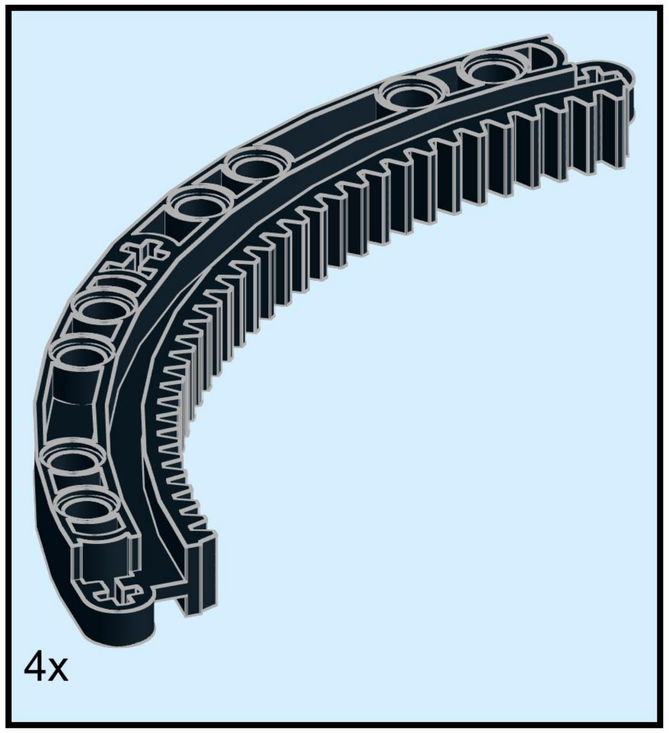

38

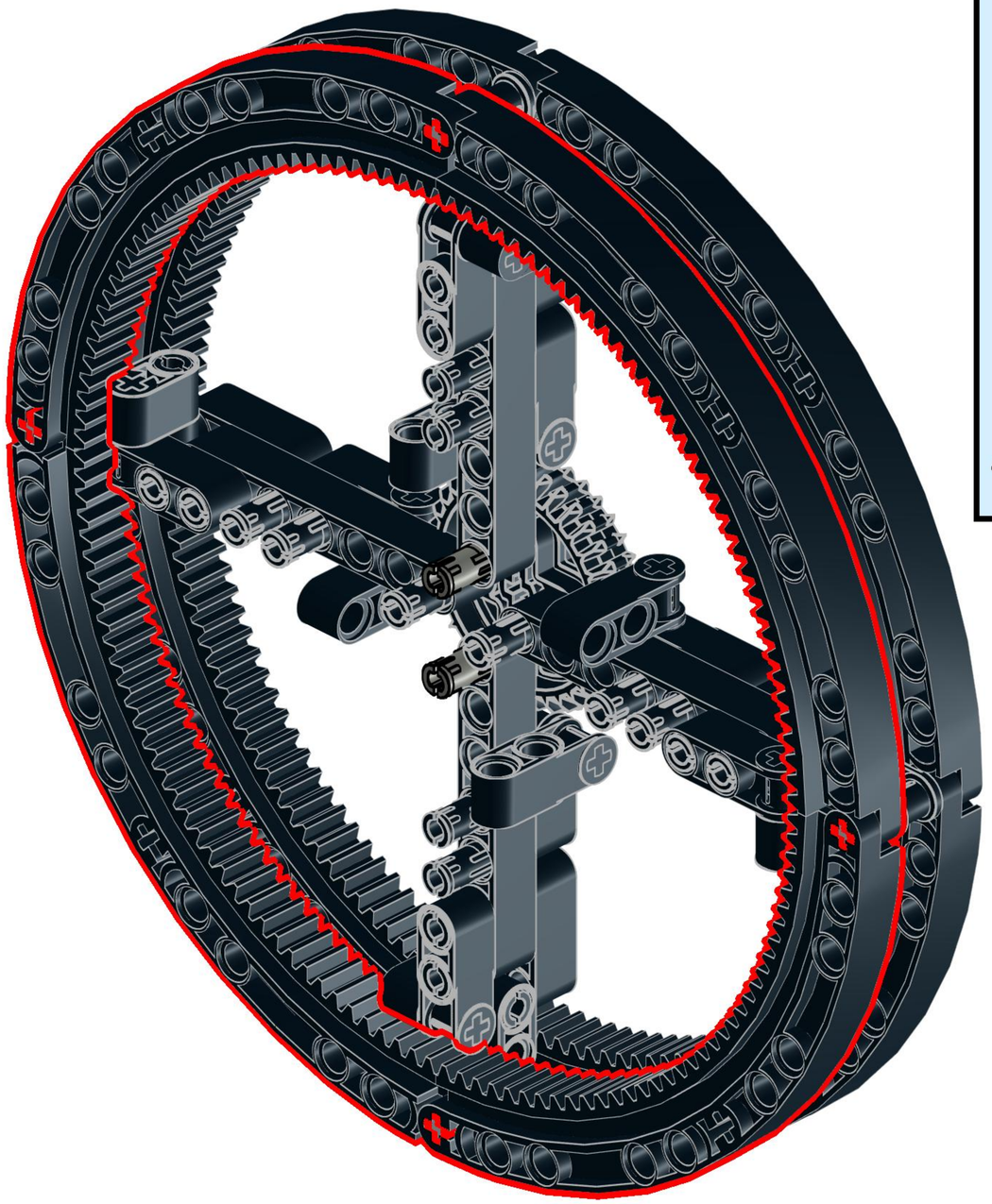

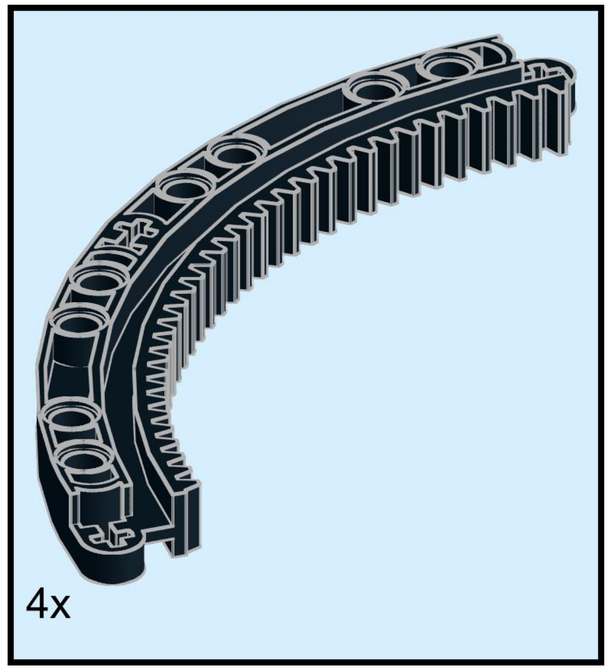

39

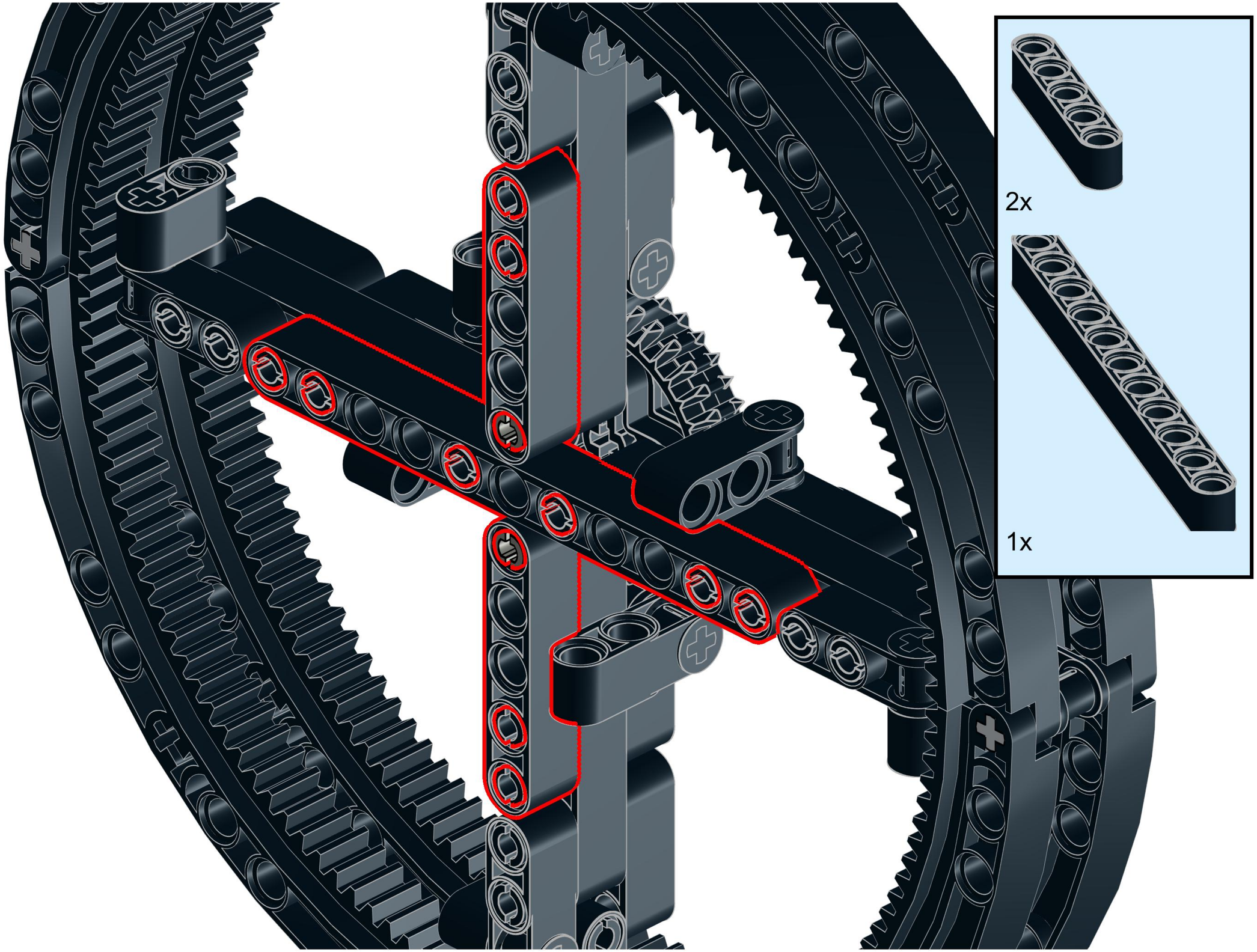

40

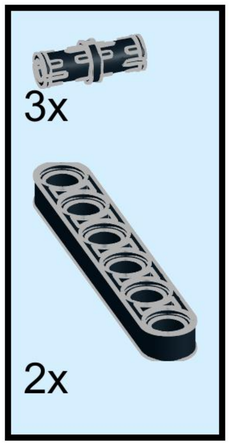

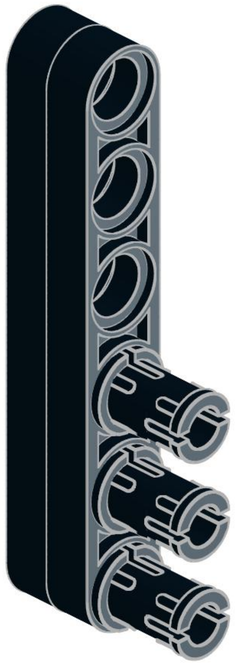

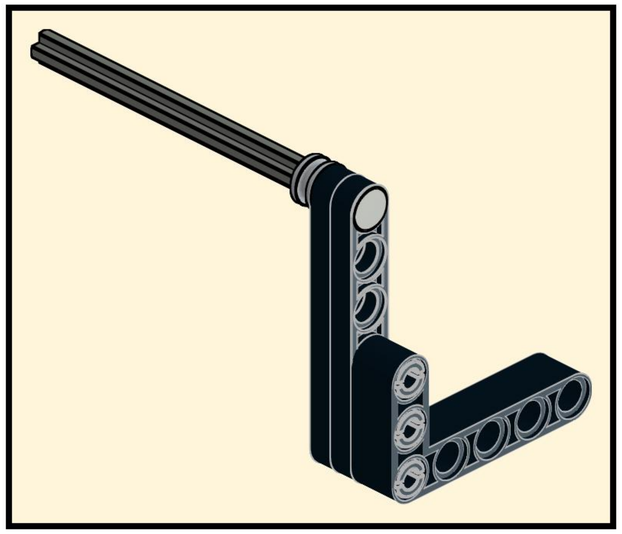

41

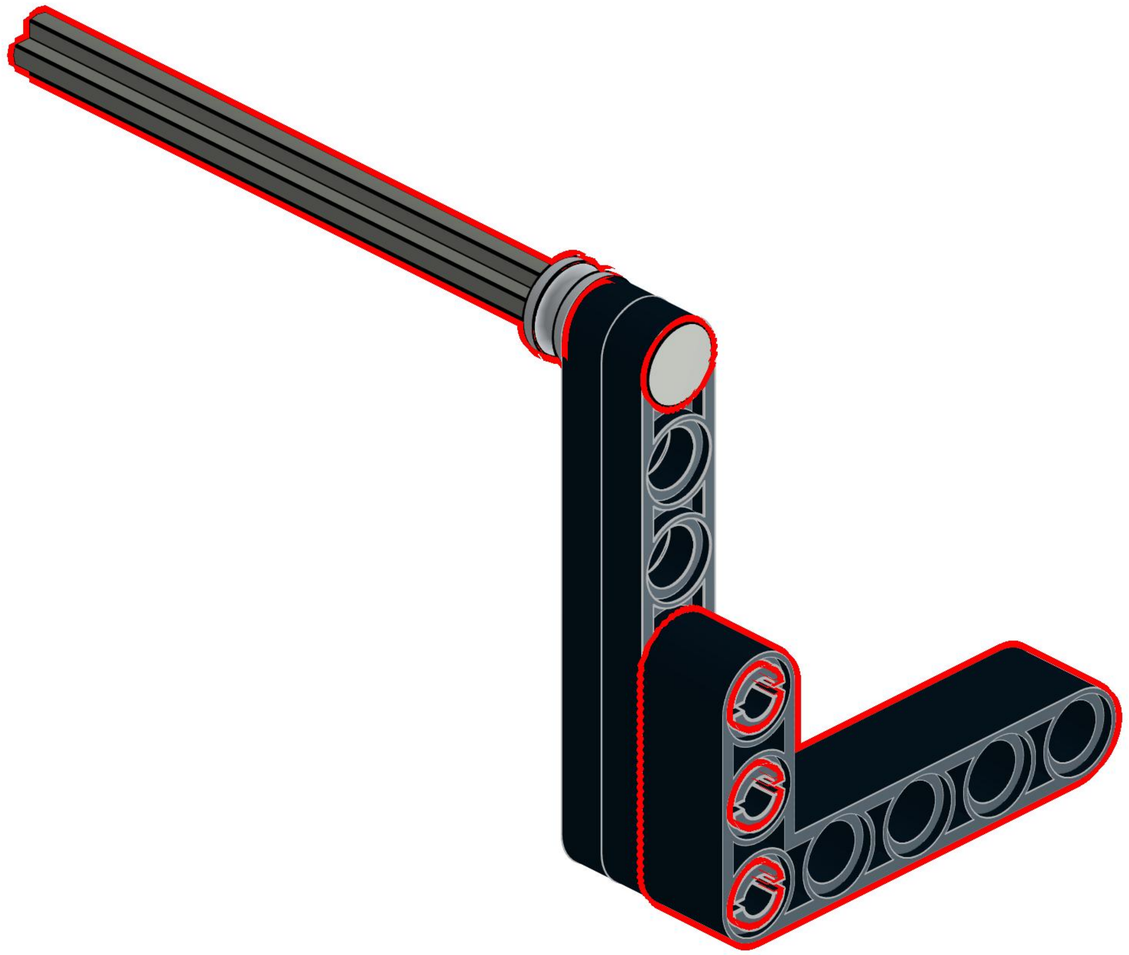

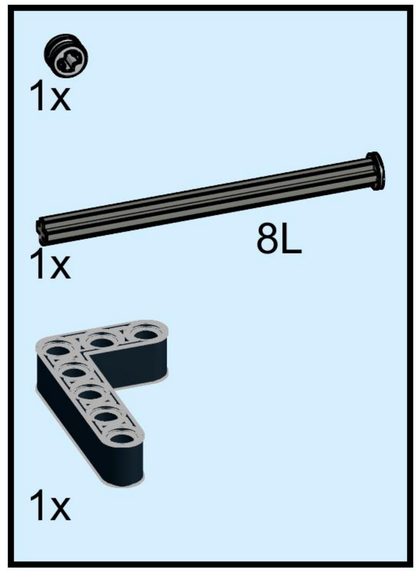

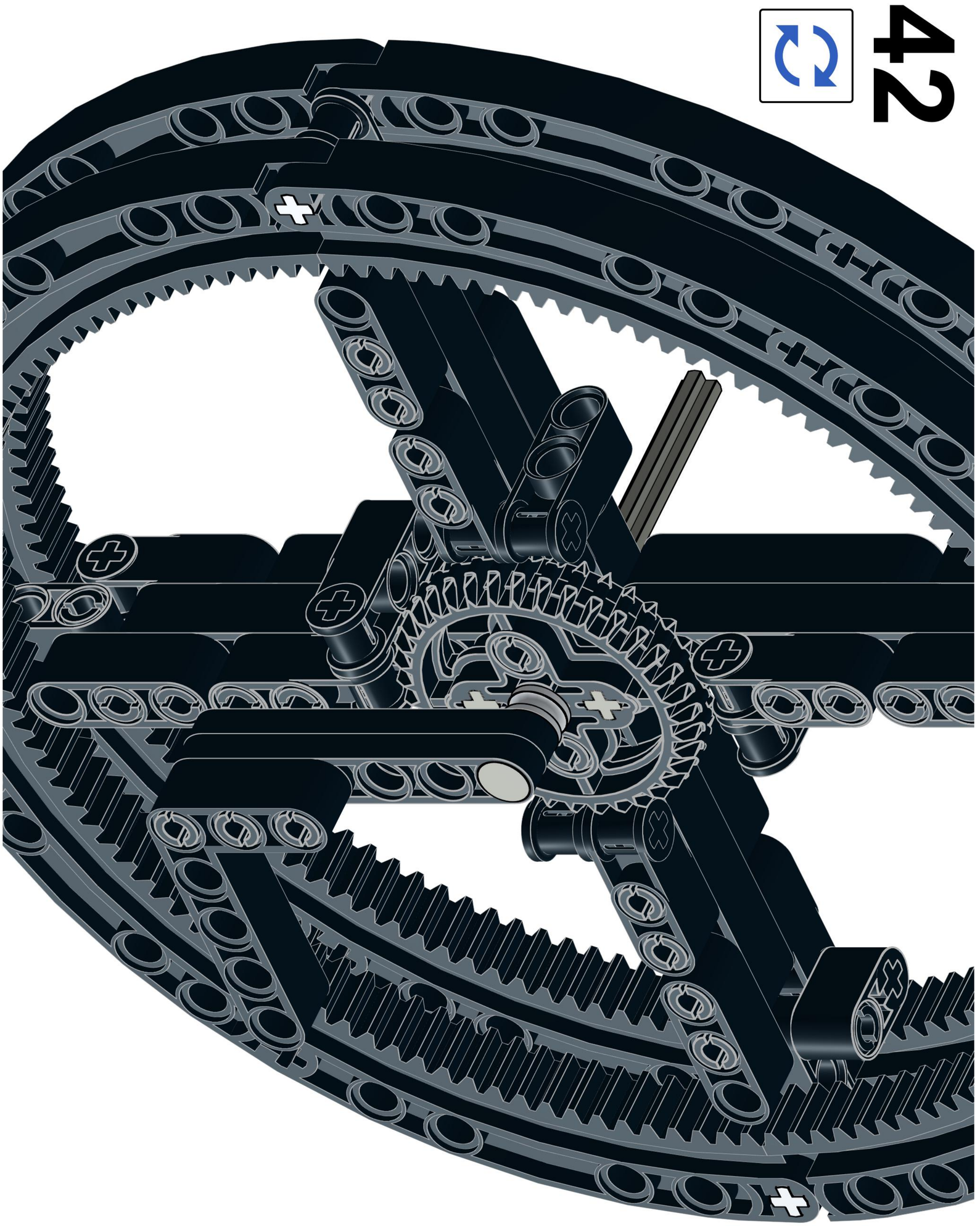
42

43

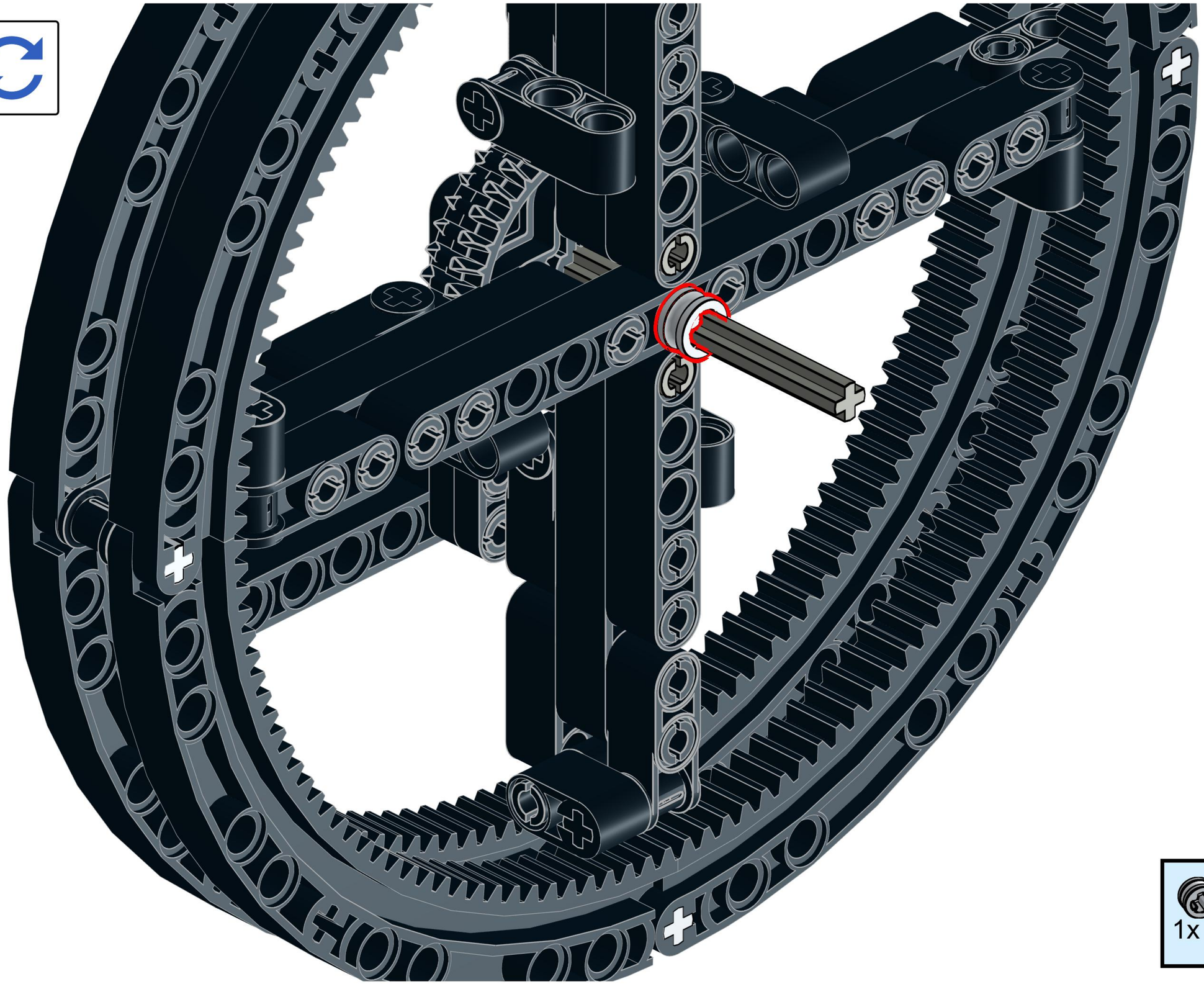

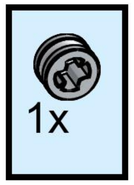

44

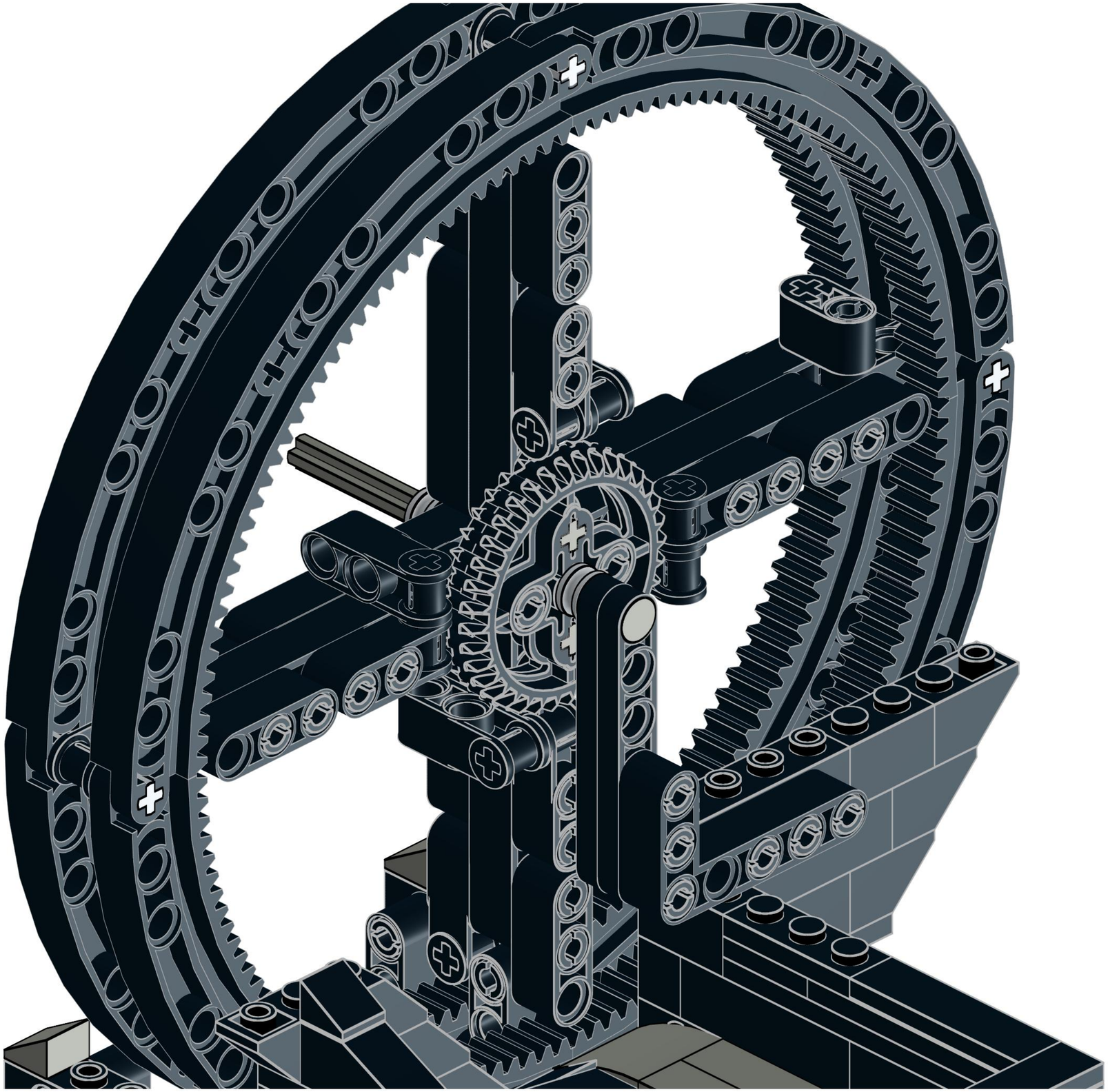

45

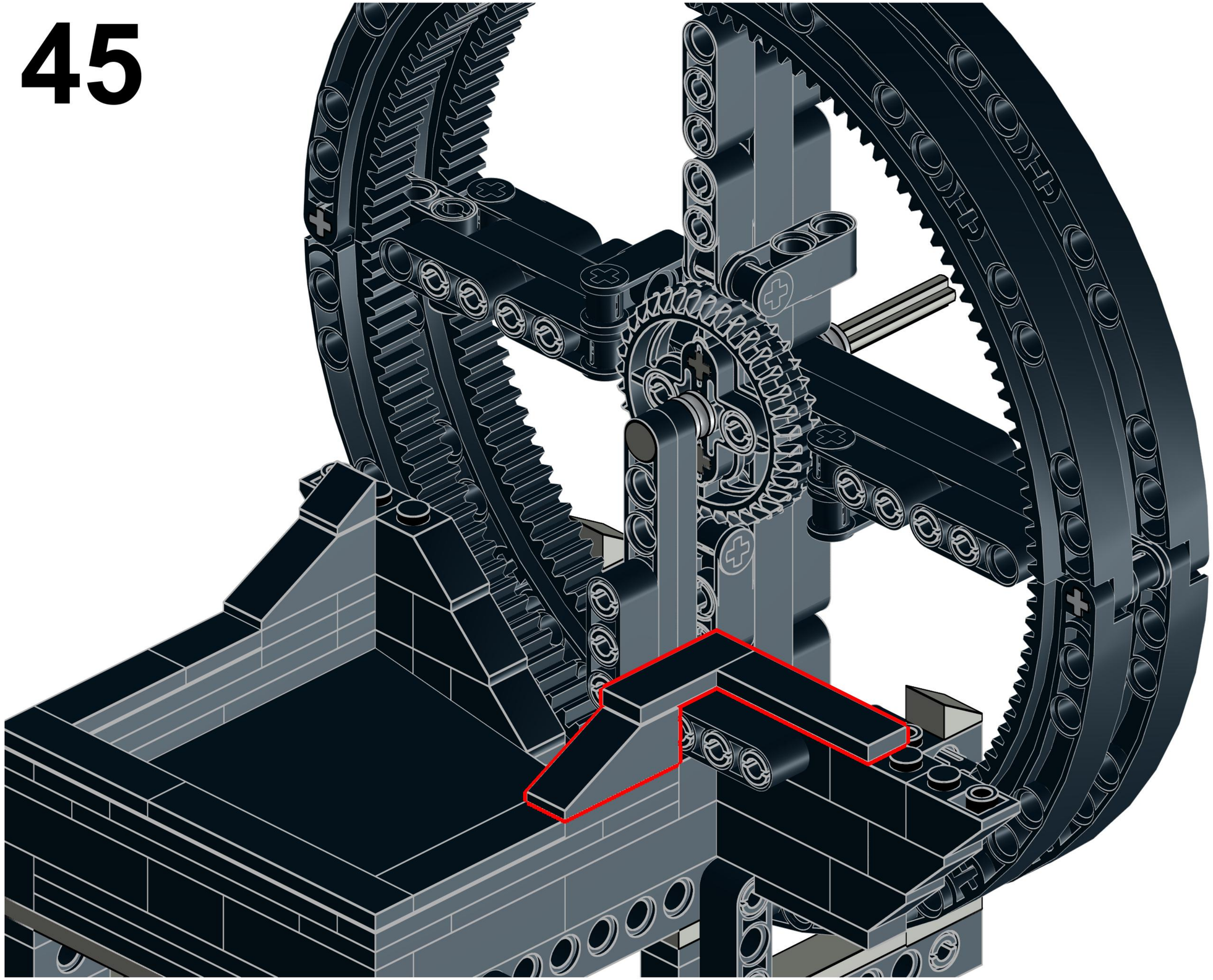

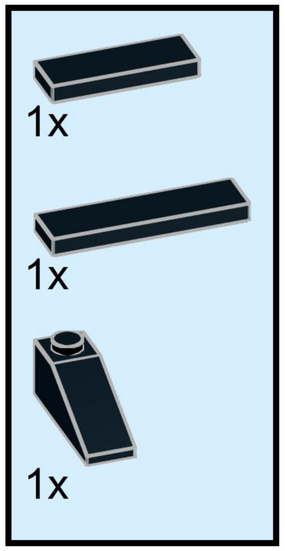

46

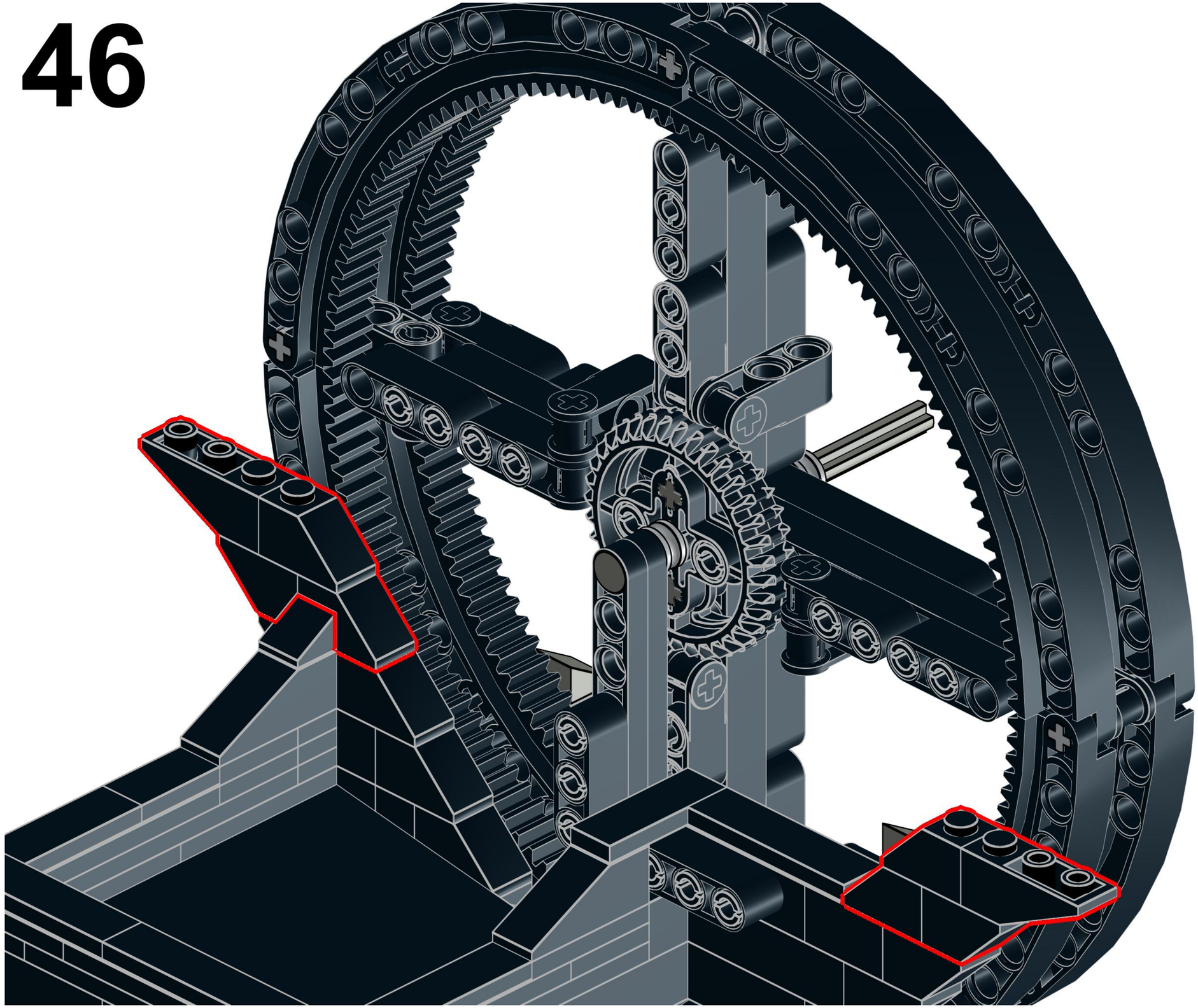

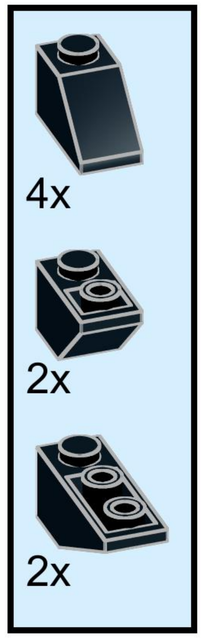

47

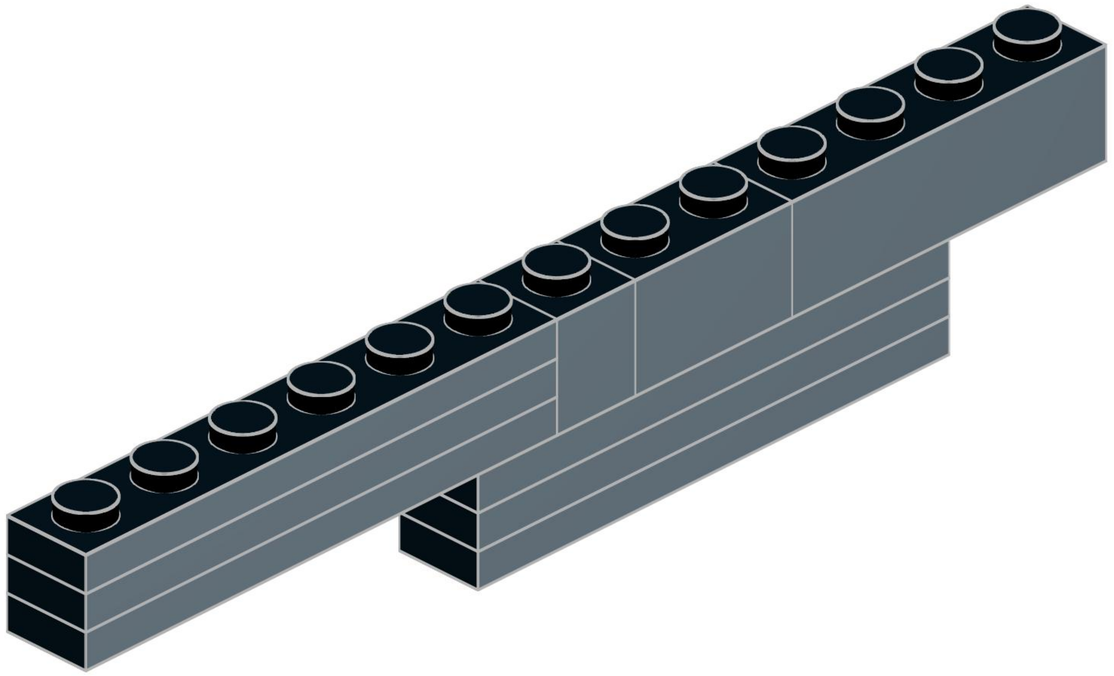

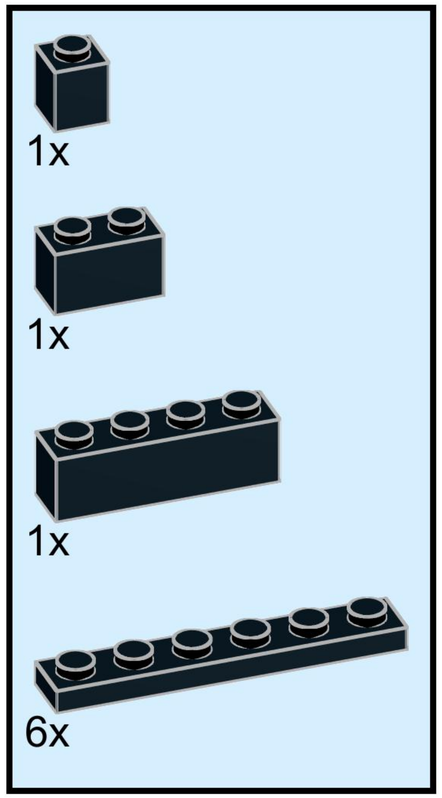

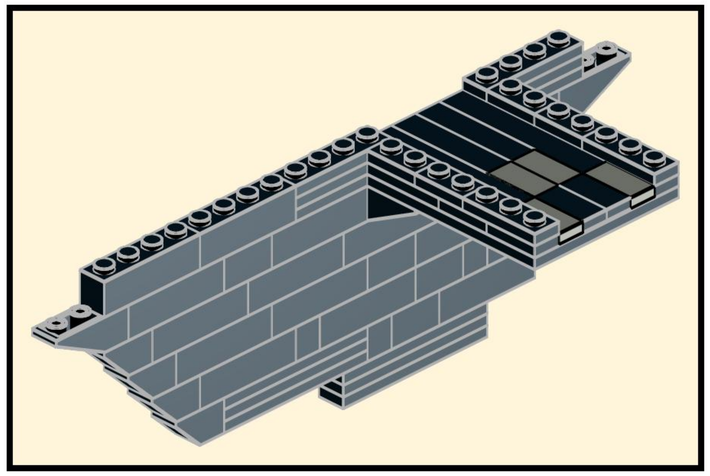

48

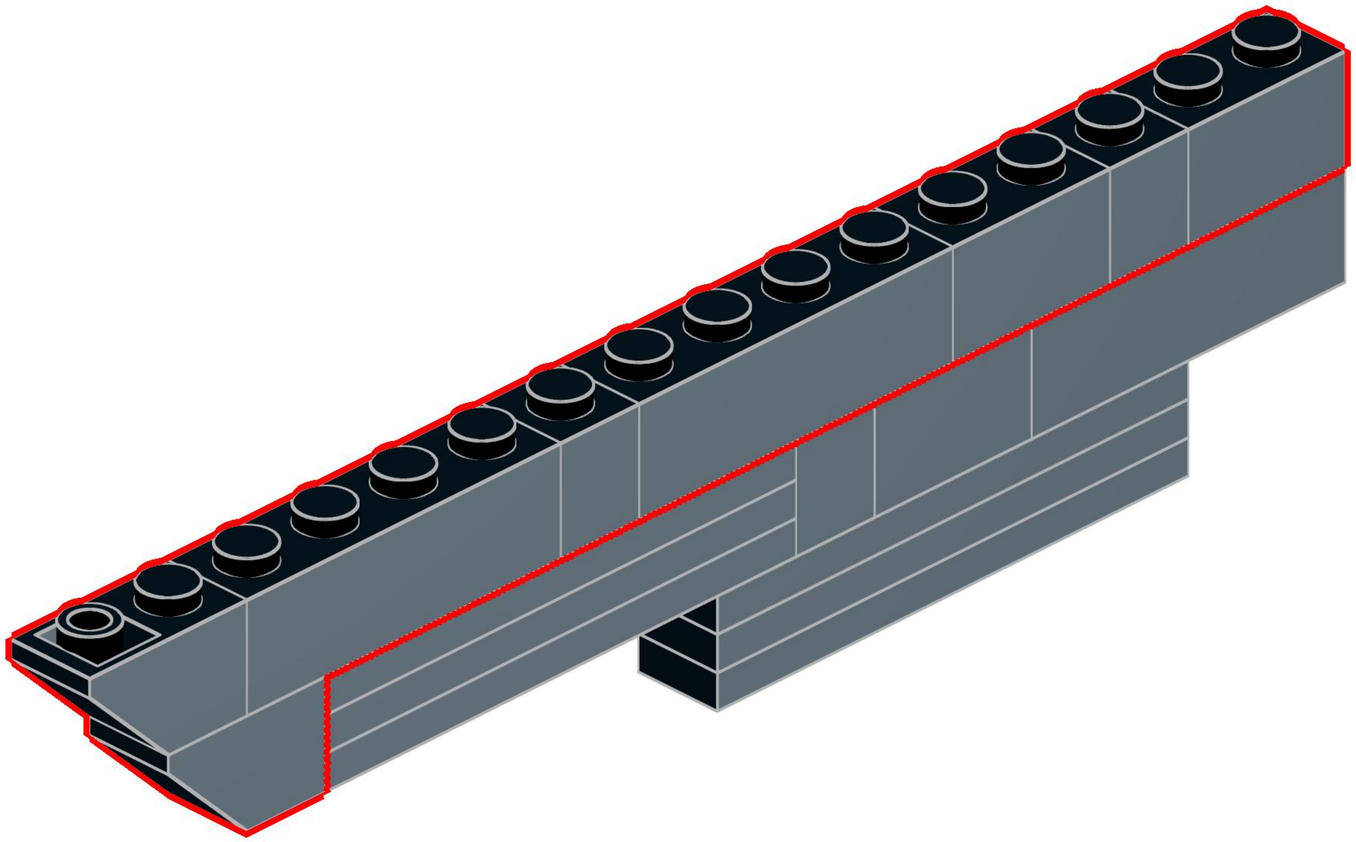

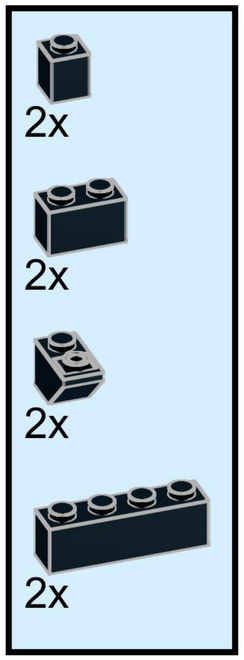

49

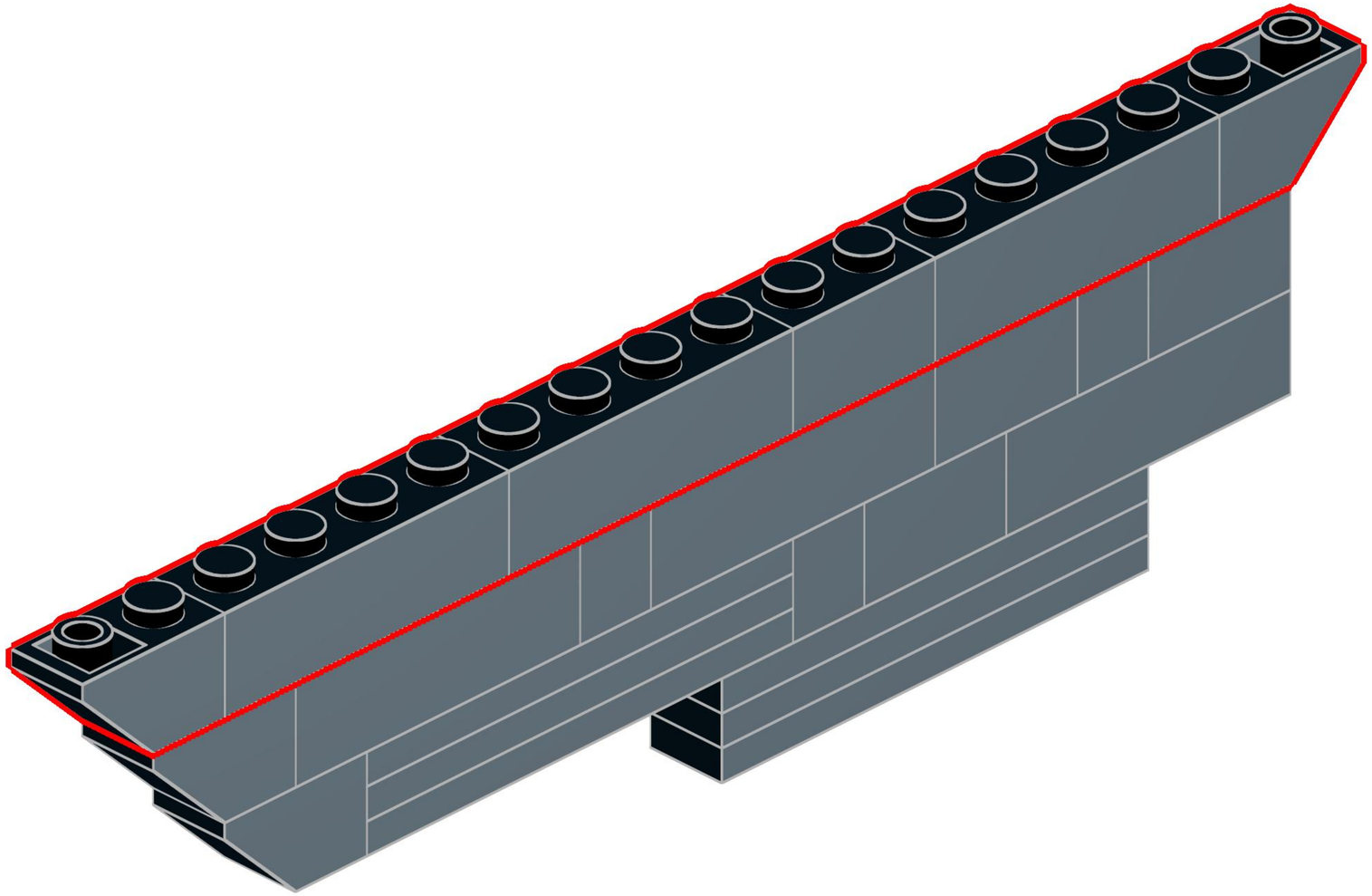

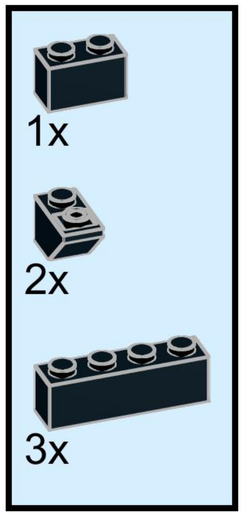

50

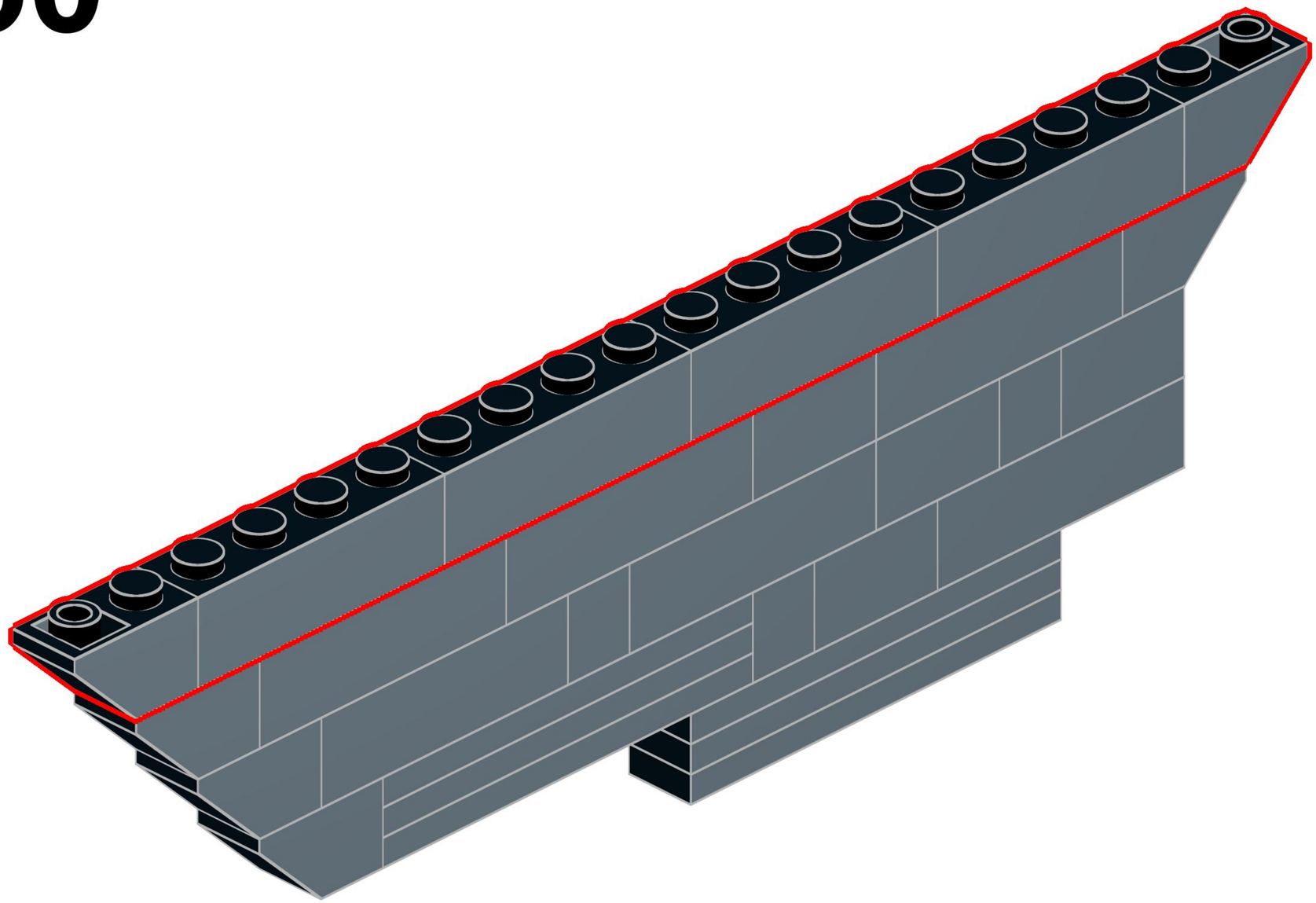

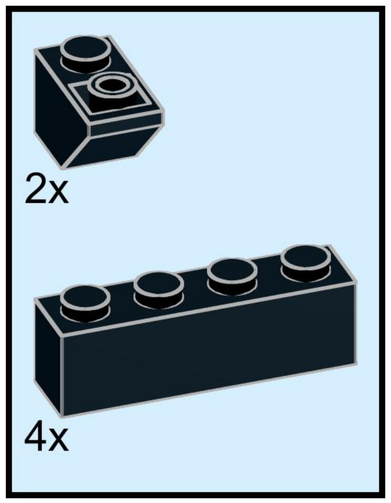

51

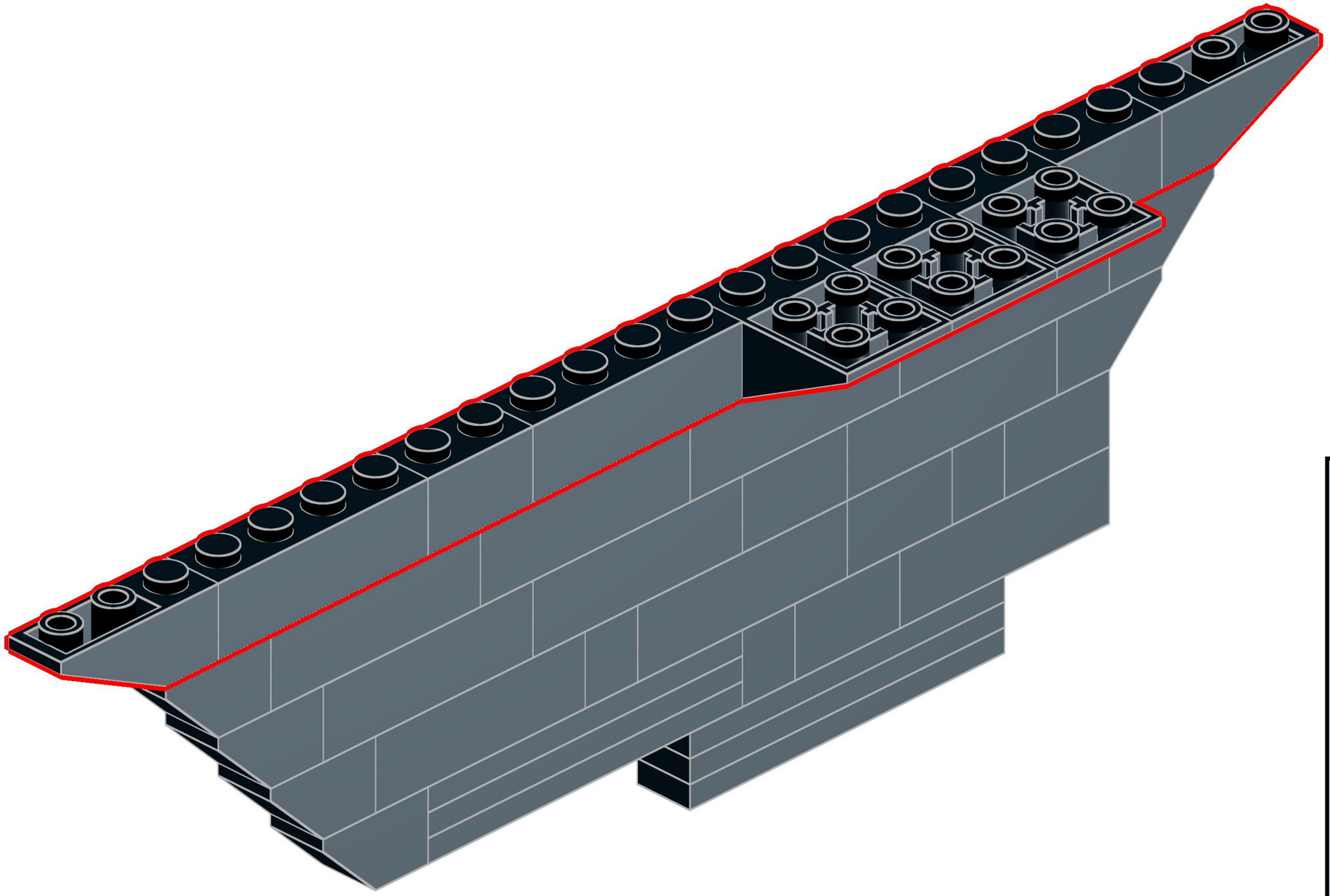

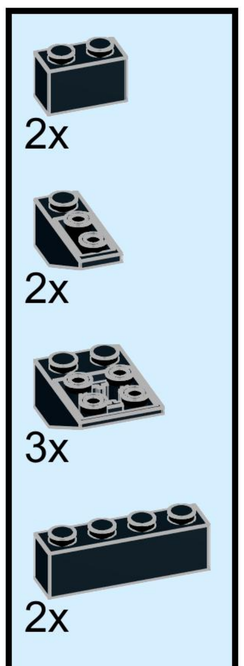

52

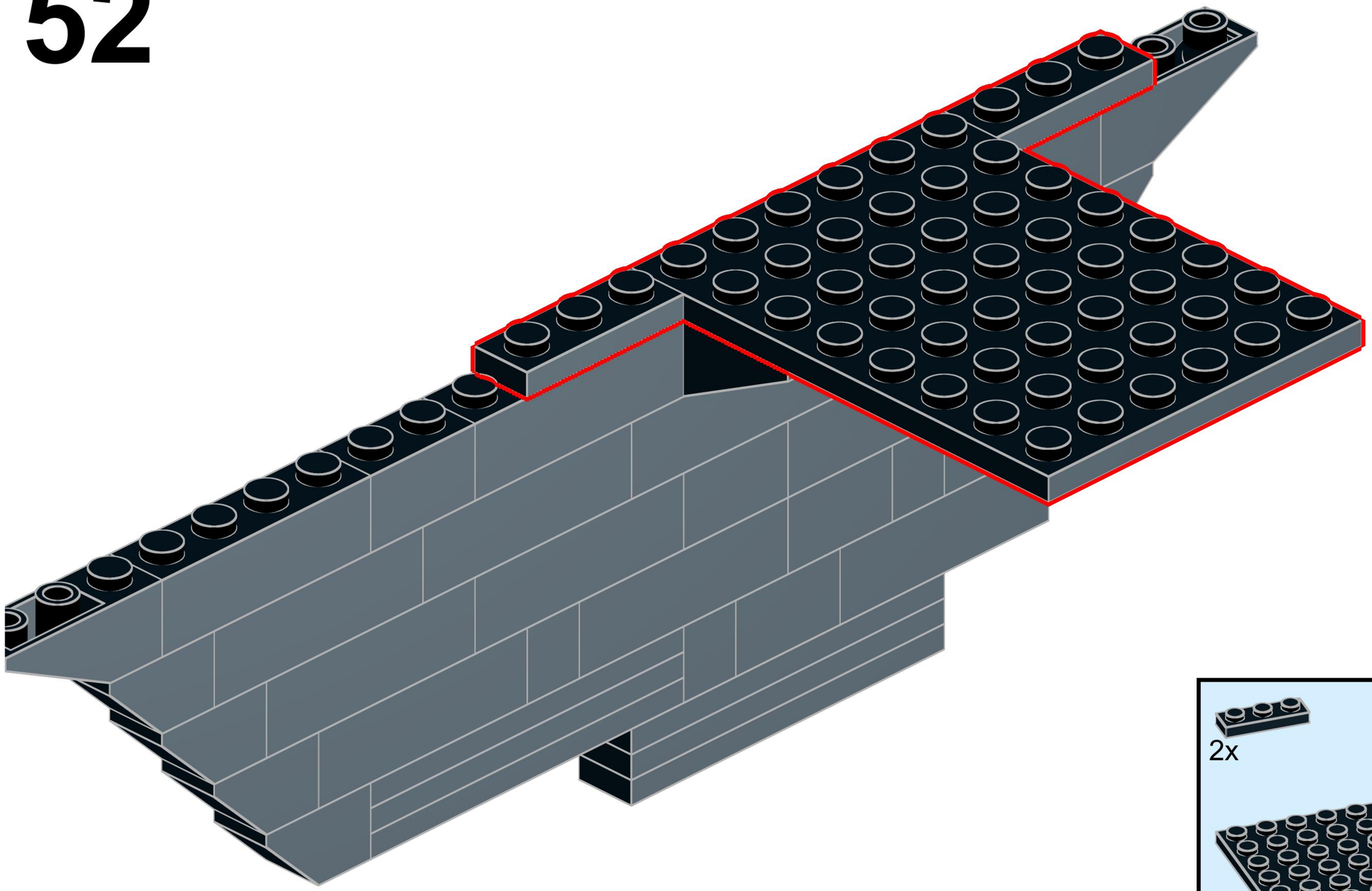

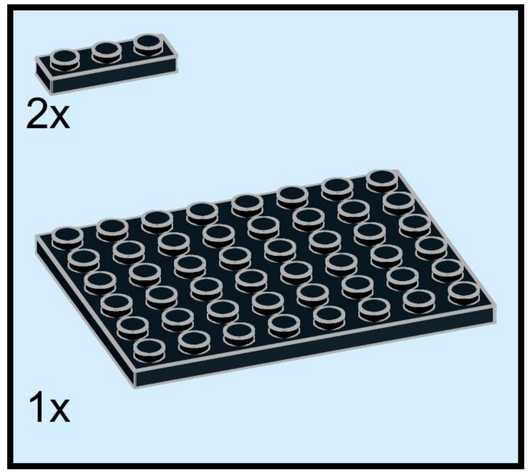

53

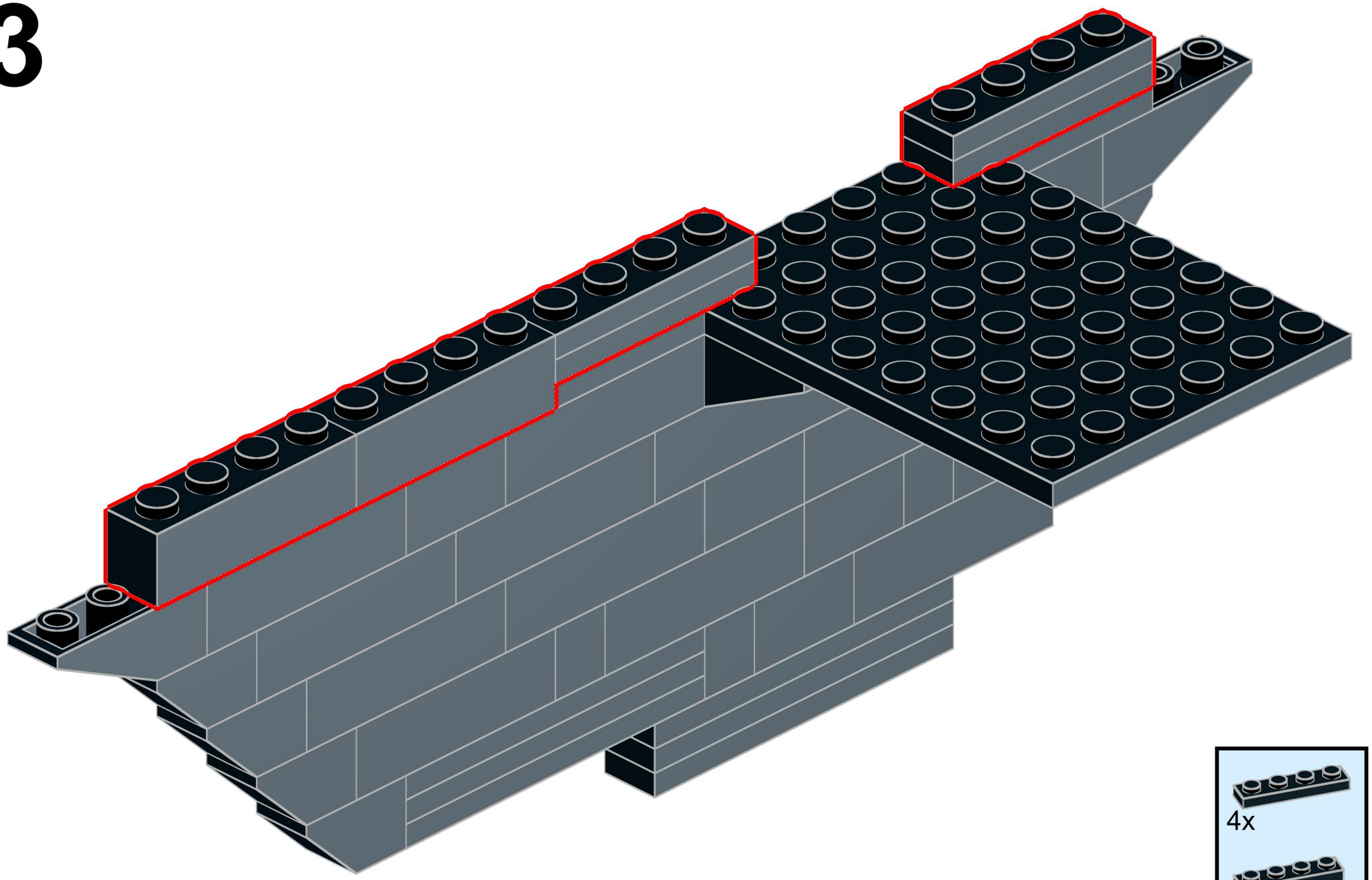

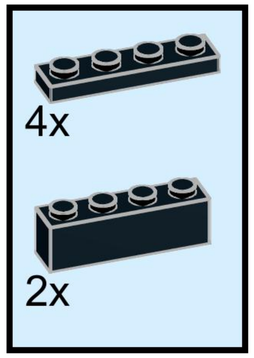

54

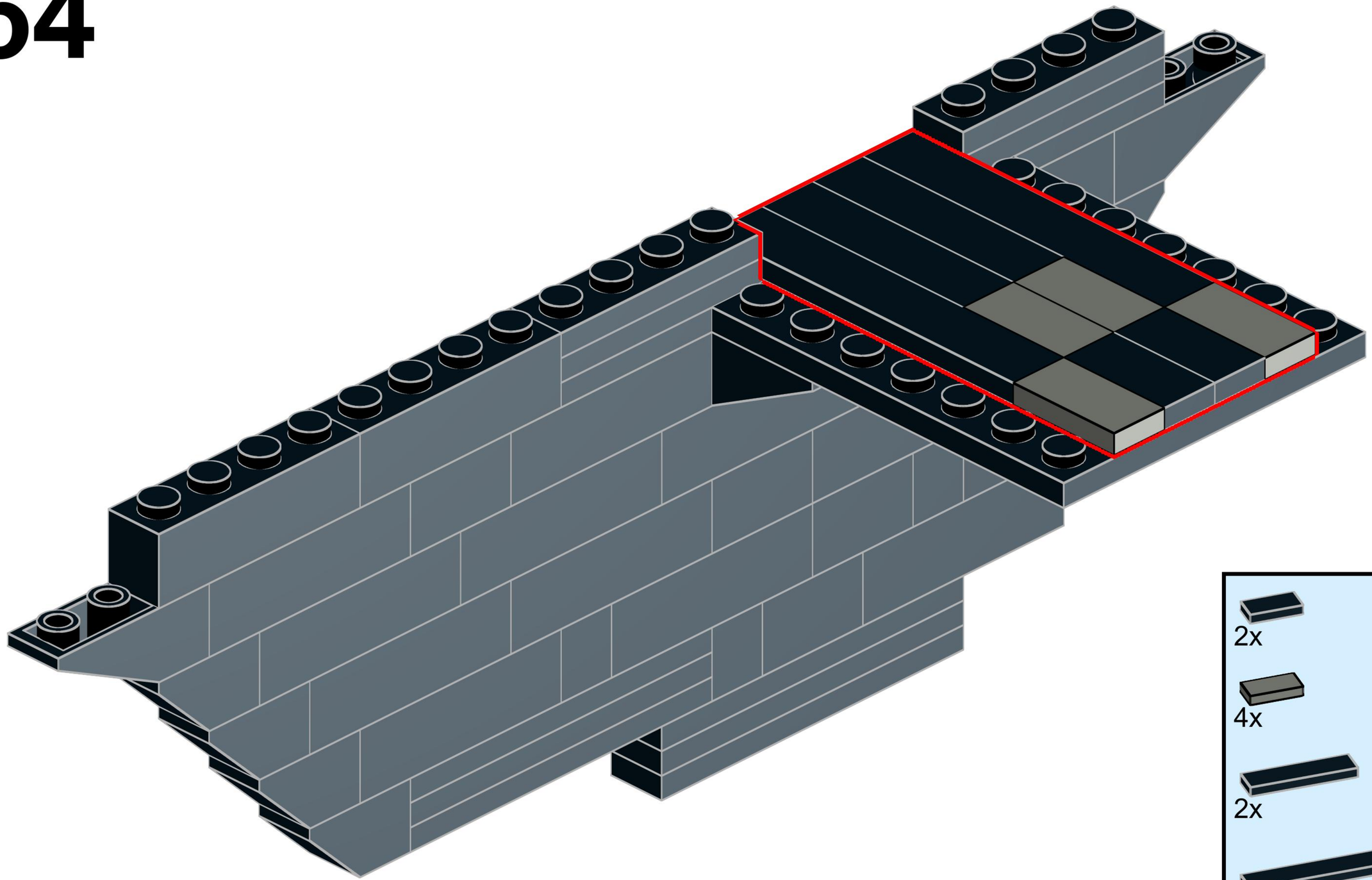

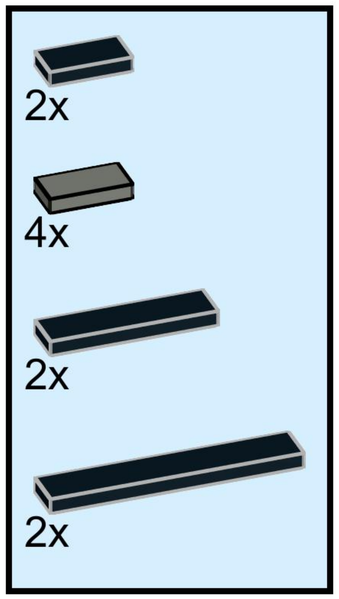

55

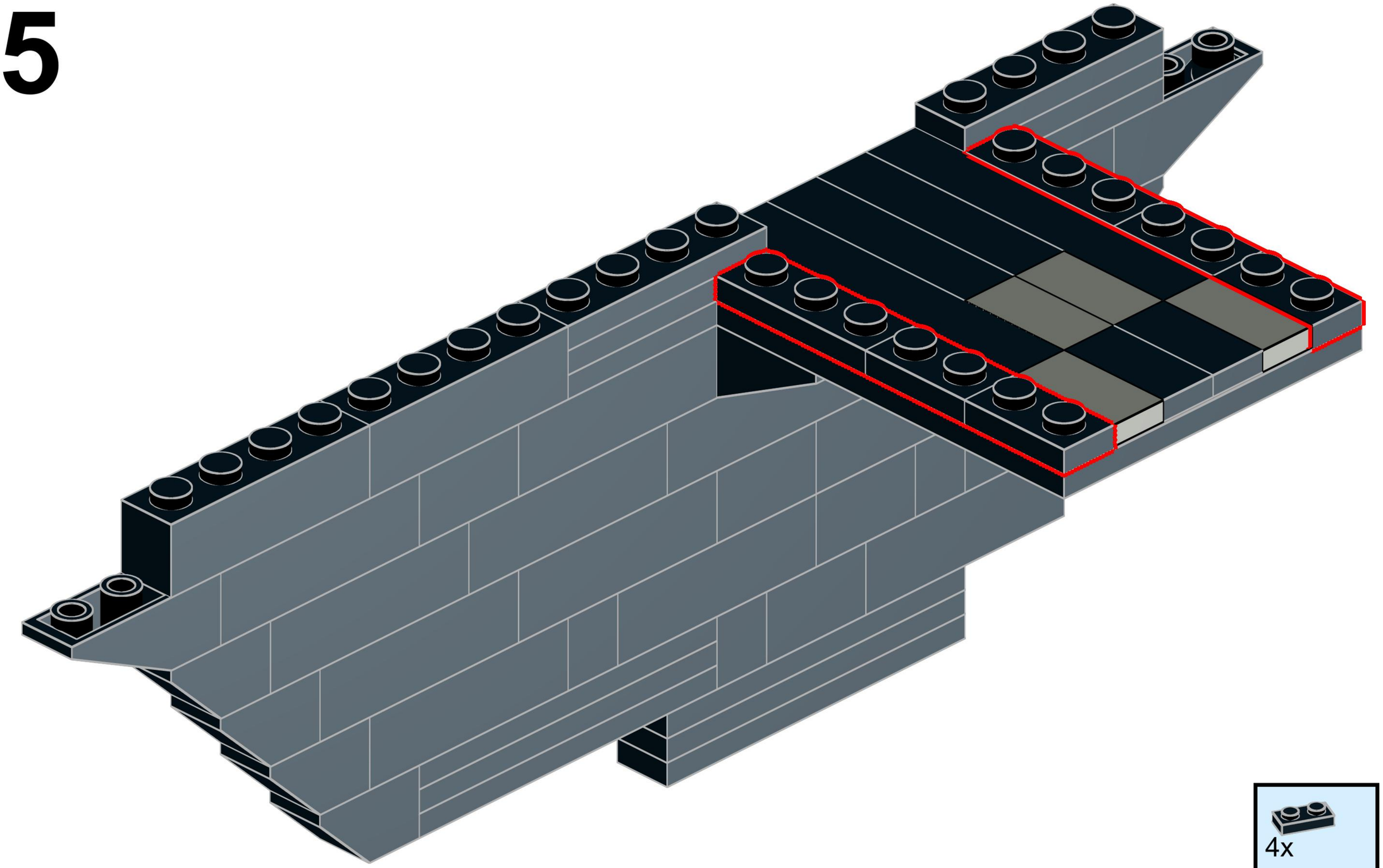

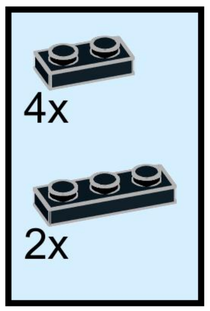

56

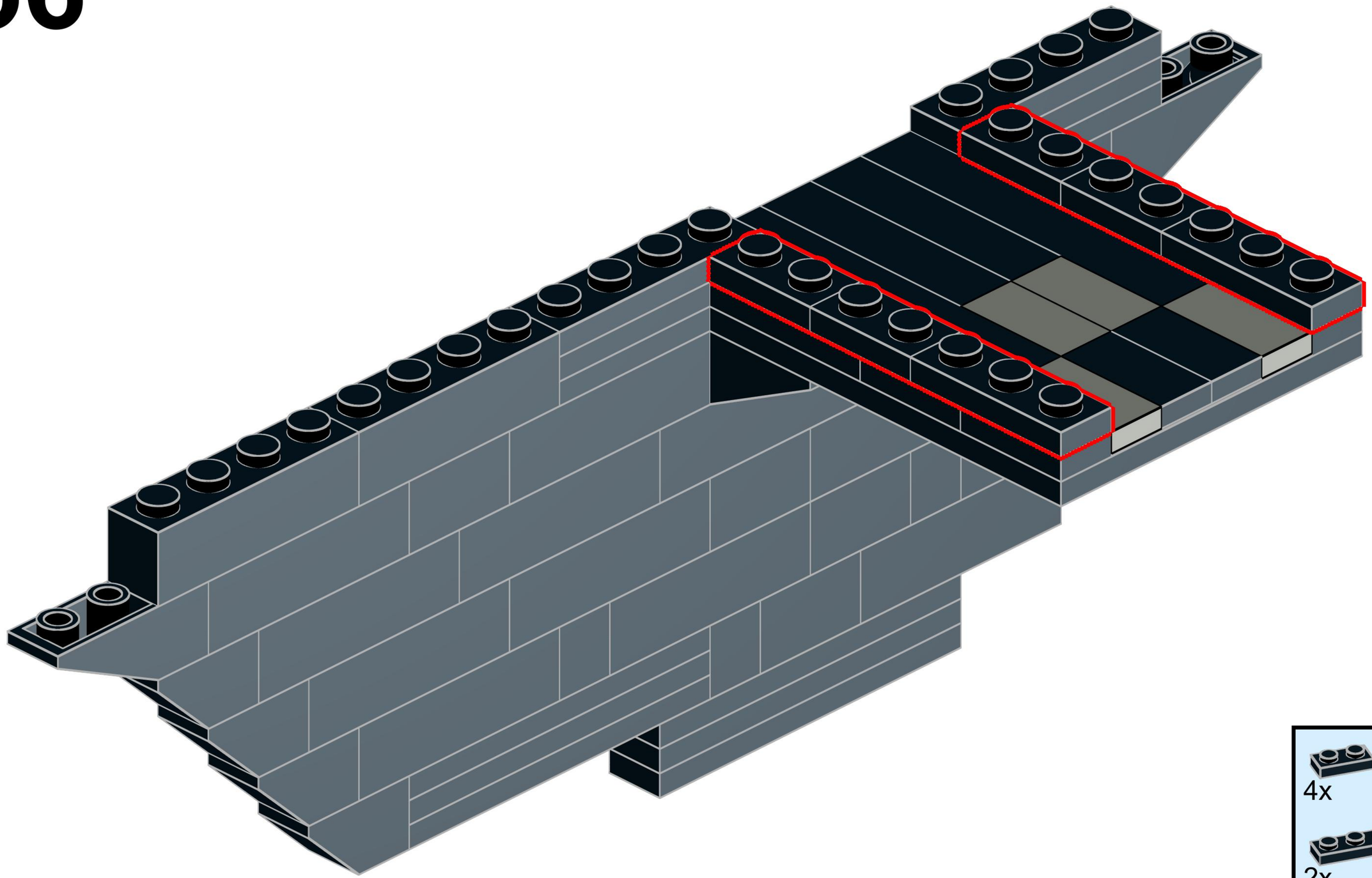

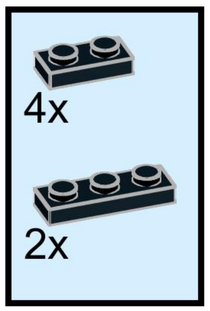

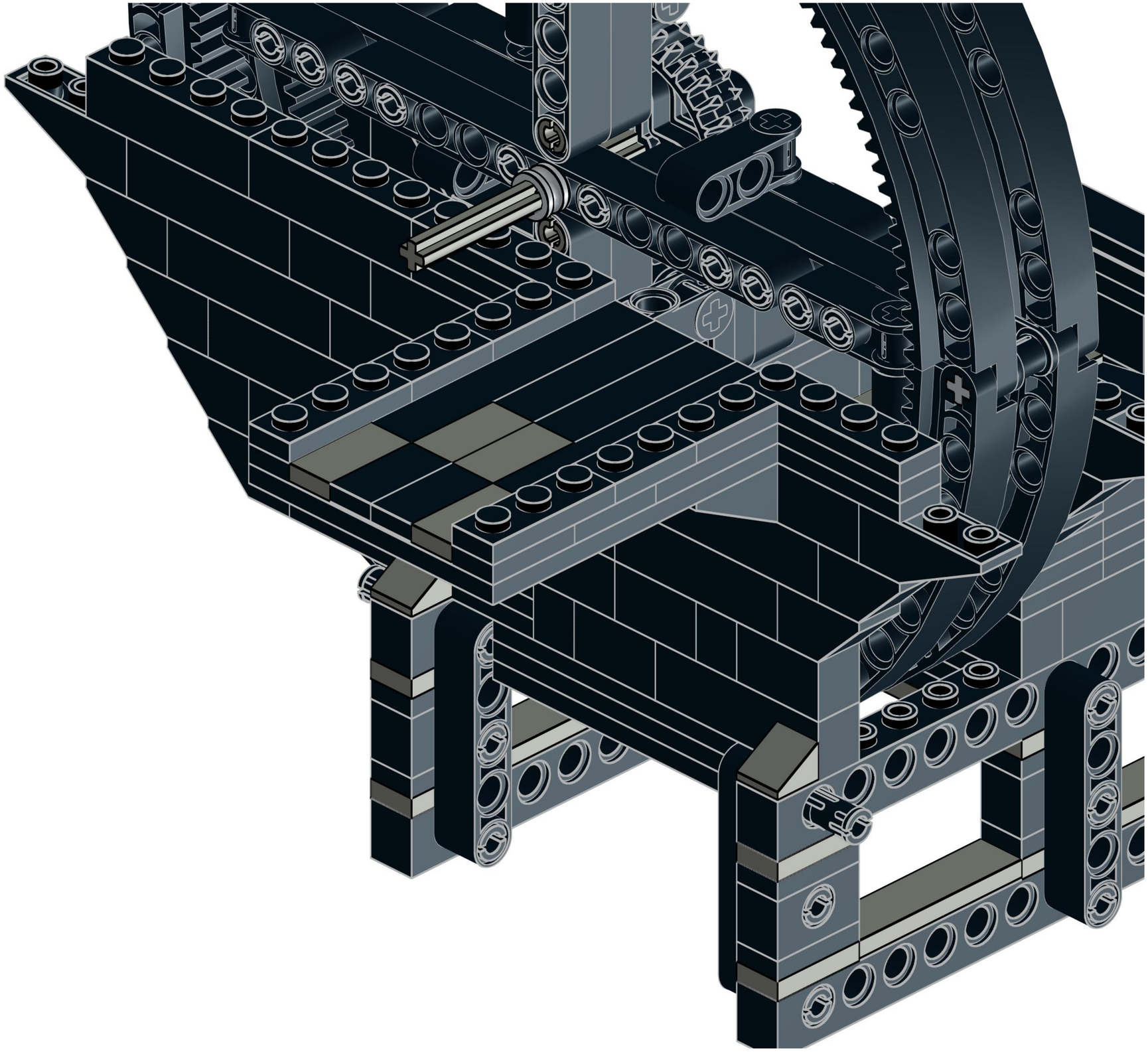

58

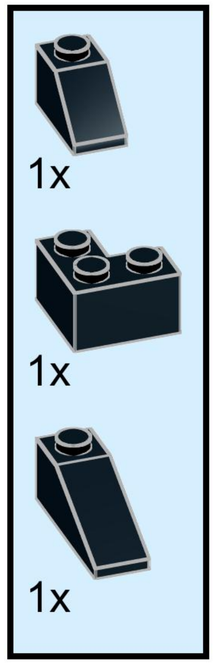

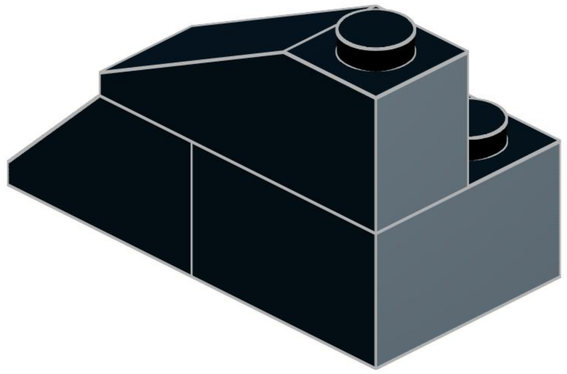

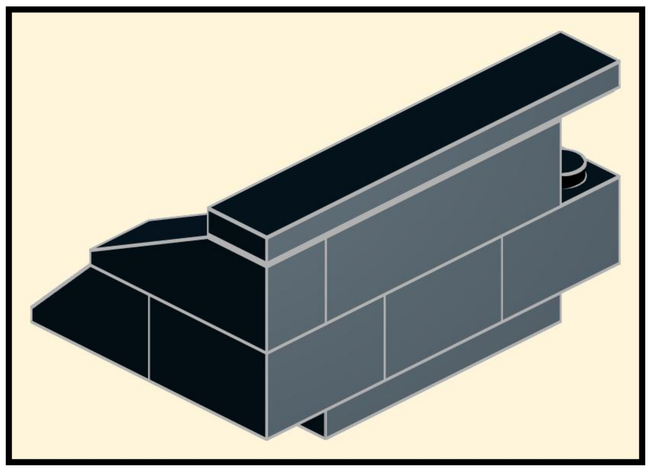

59

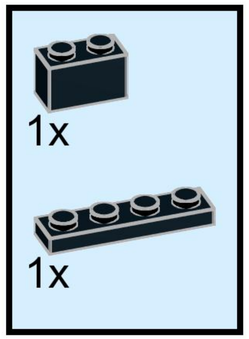

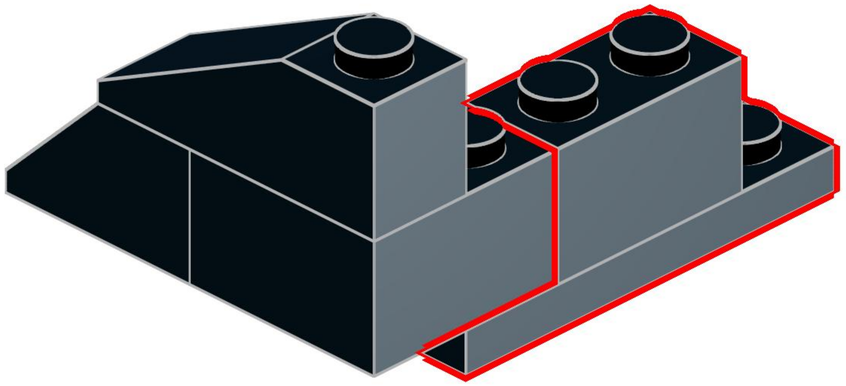

60

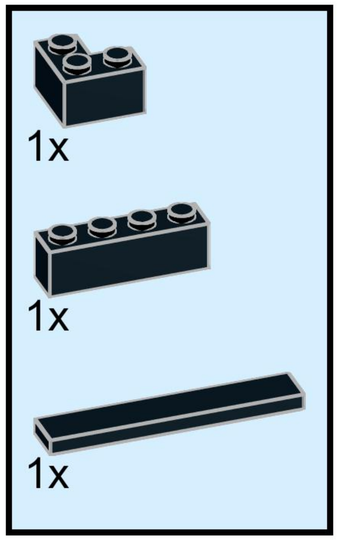

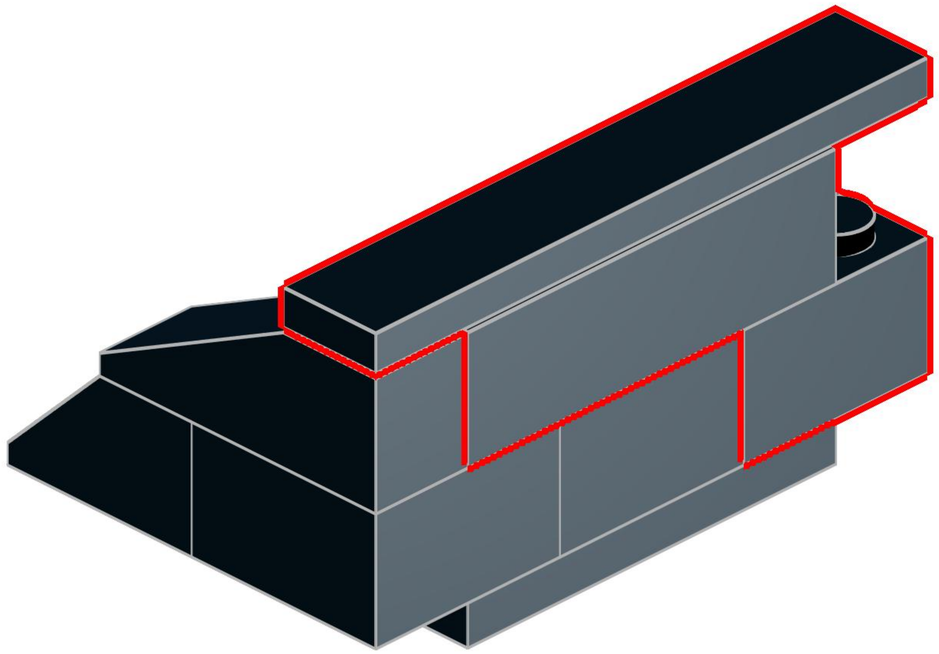

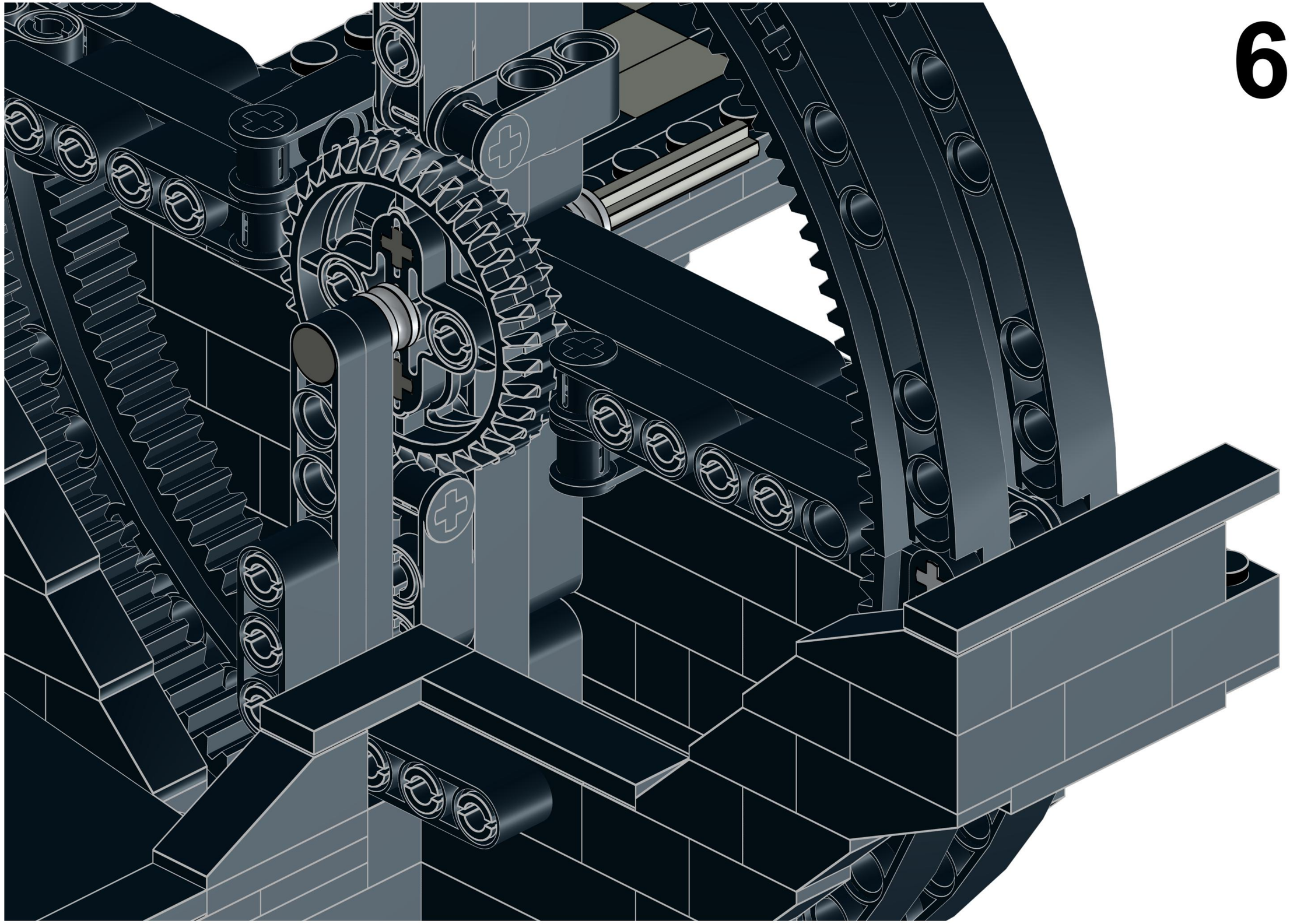

62

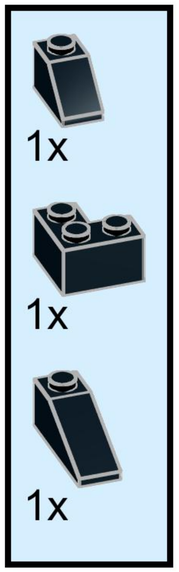

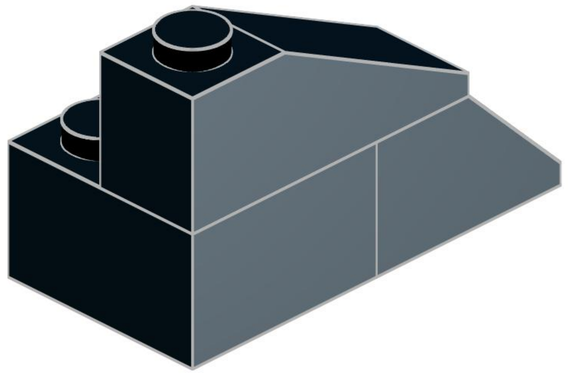

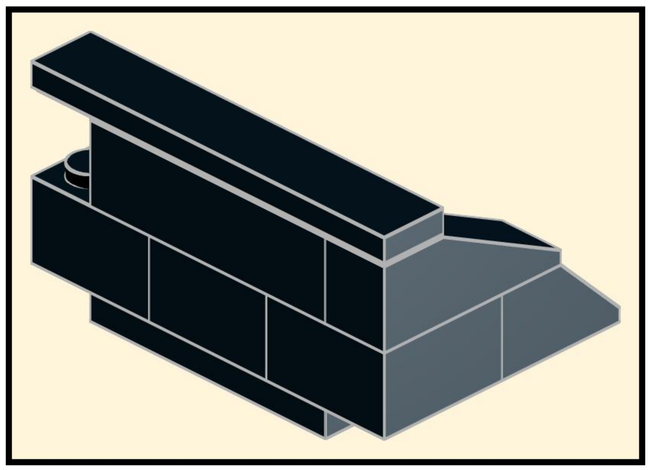

63

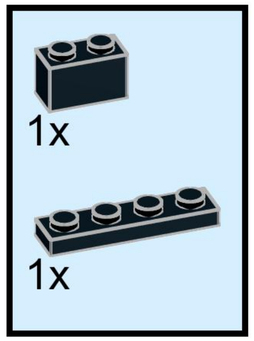

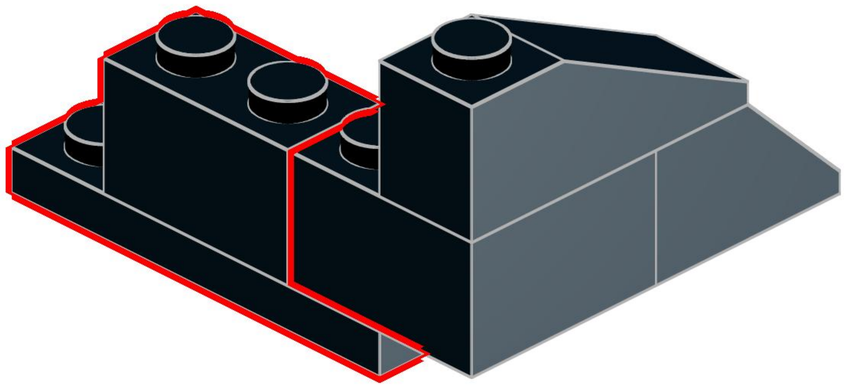

64

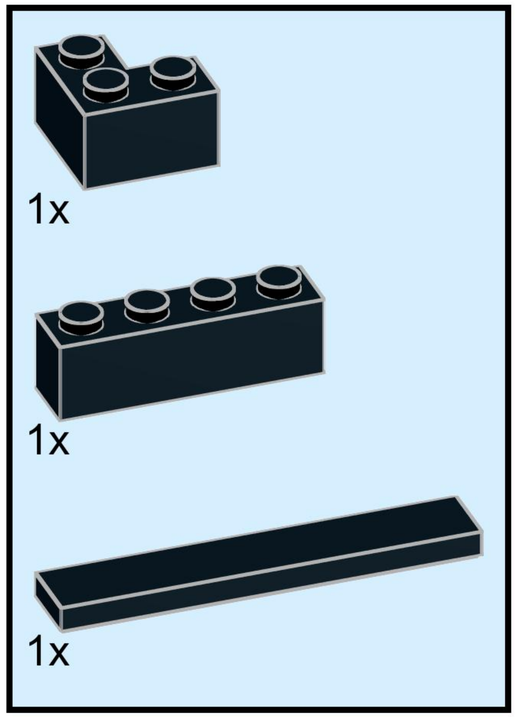

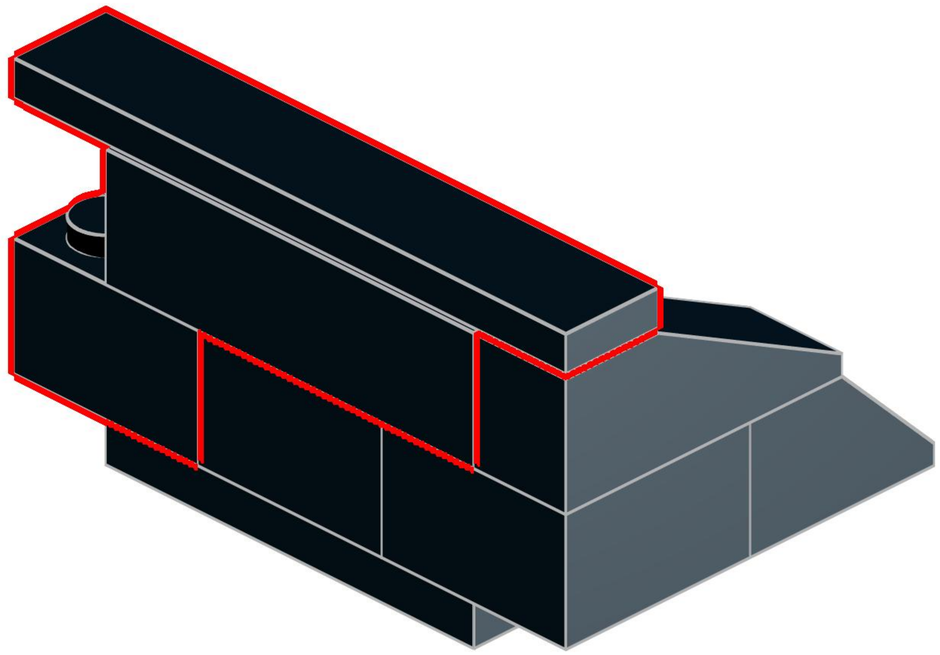

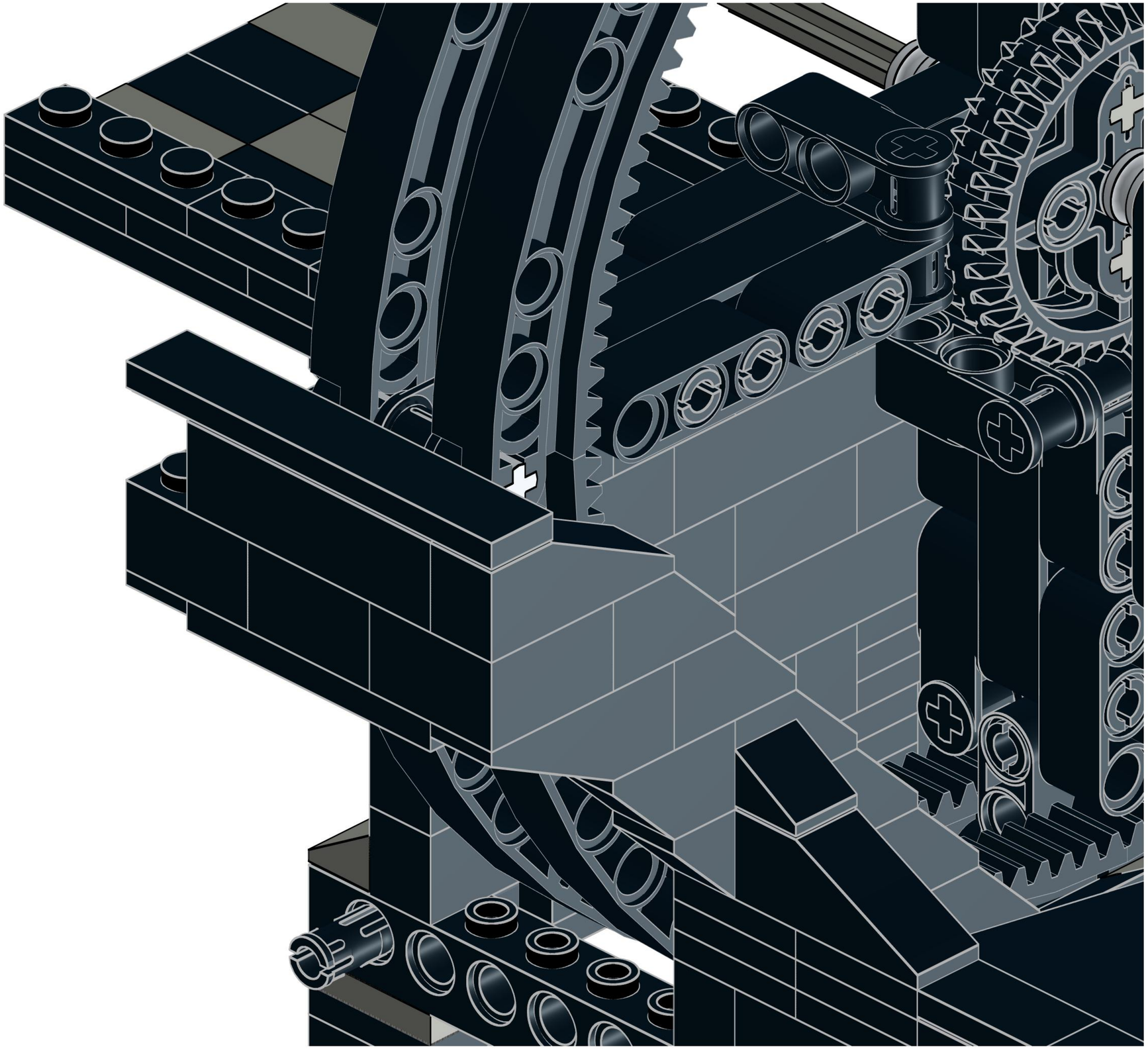

66

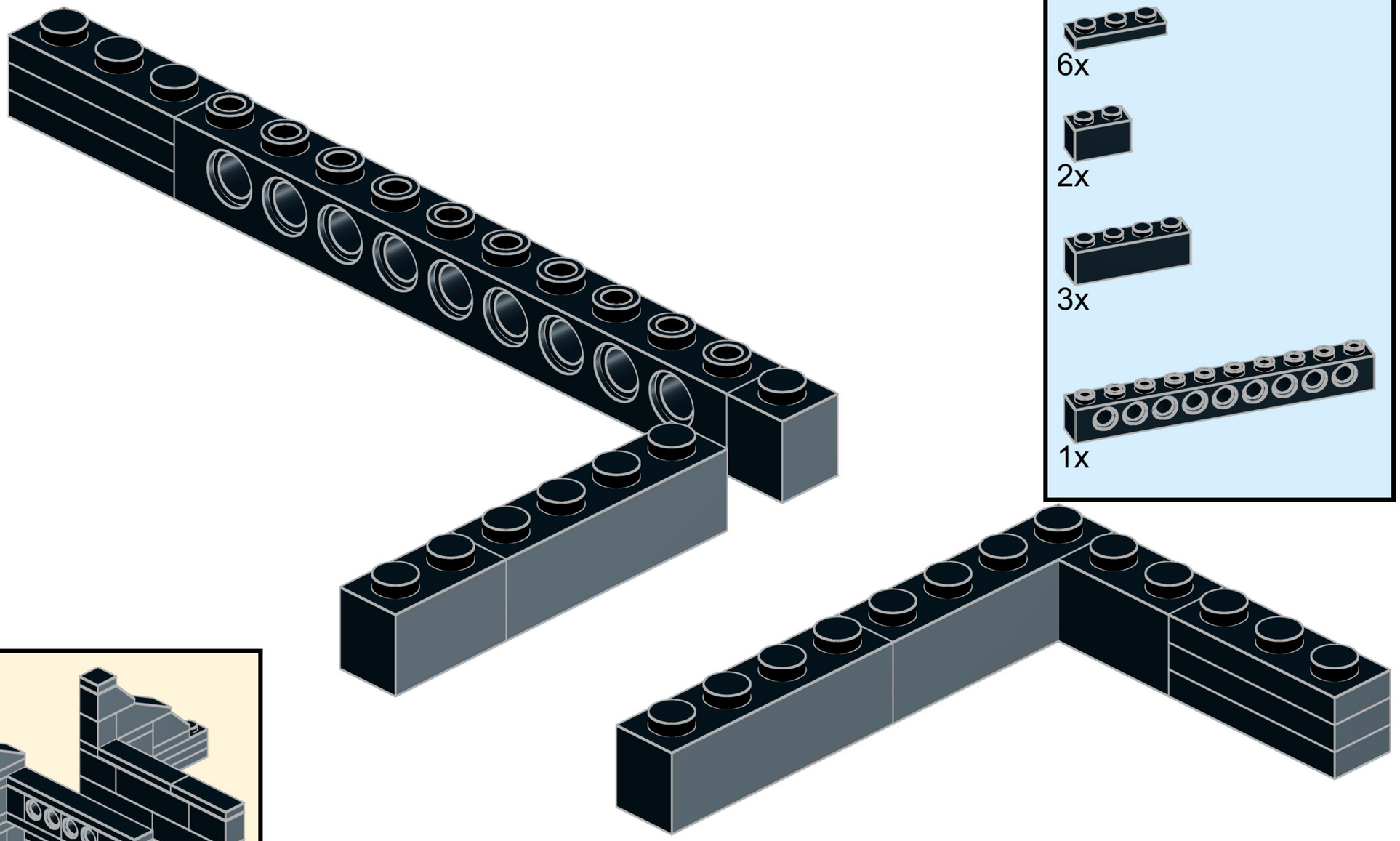

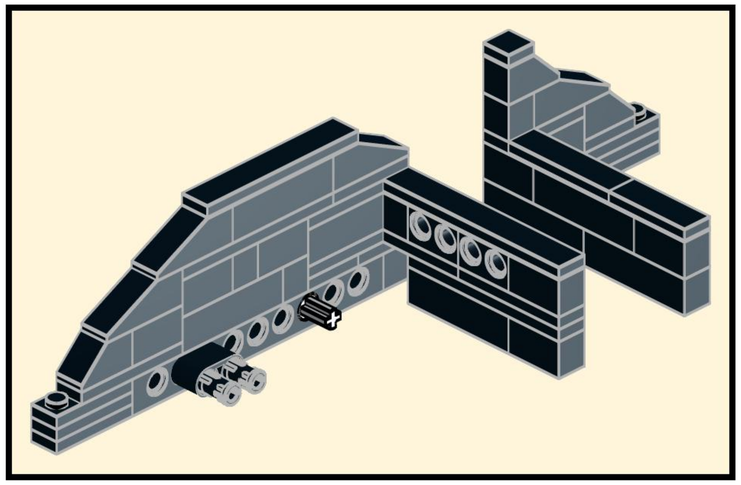

These parts should be built directly on top of the just-built lower rear wall. The entire model is not shown here as it is visually very "cluttered" and difficult to see new parts being placed.

** Review Step 76 and then come back and continue **

67

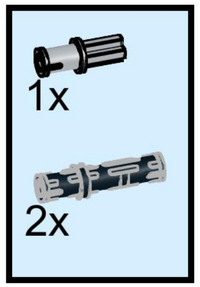

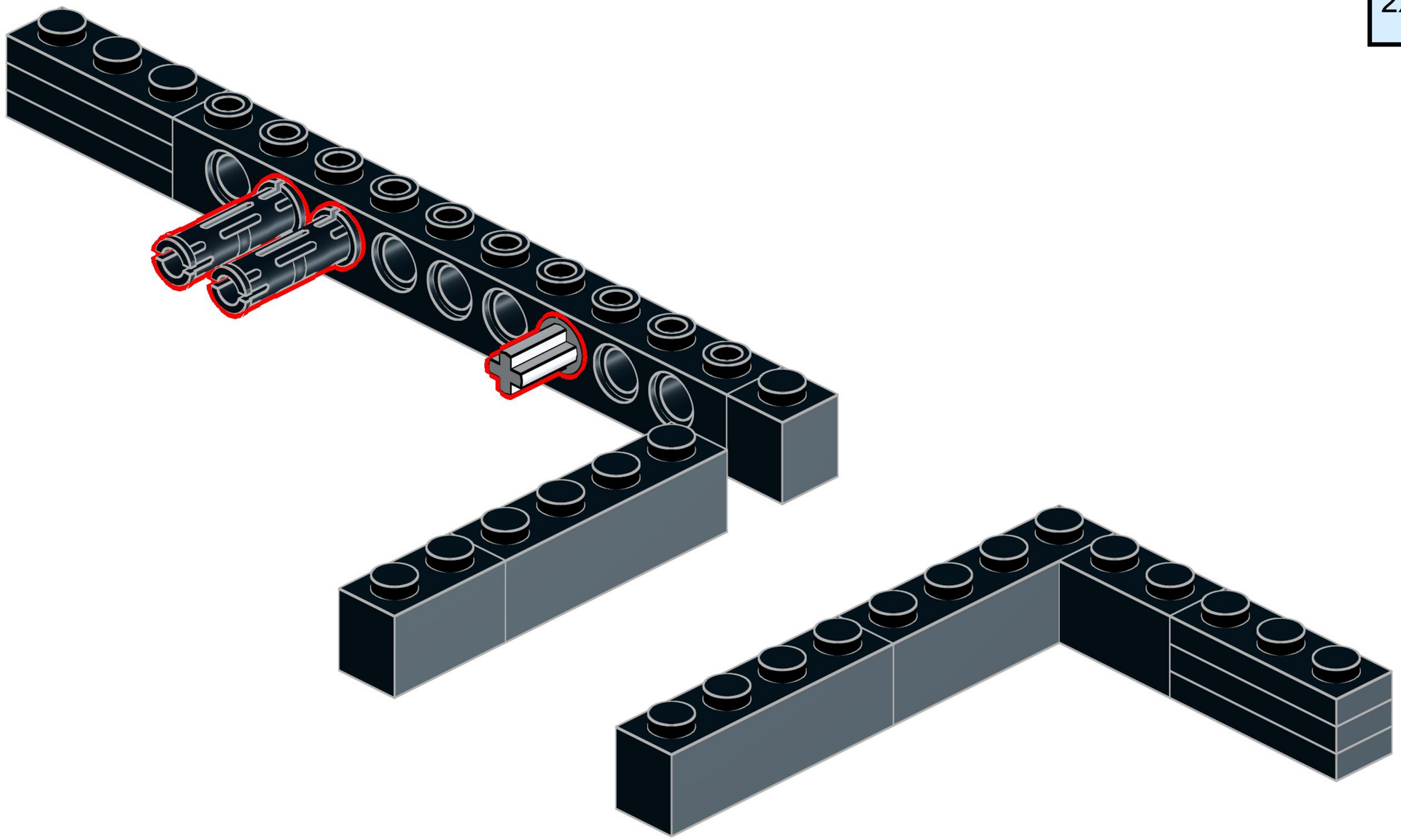

68

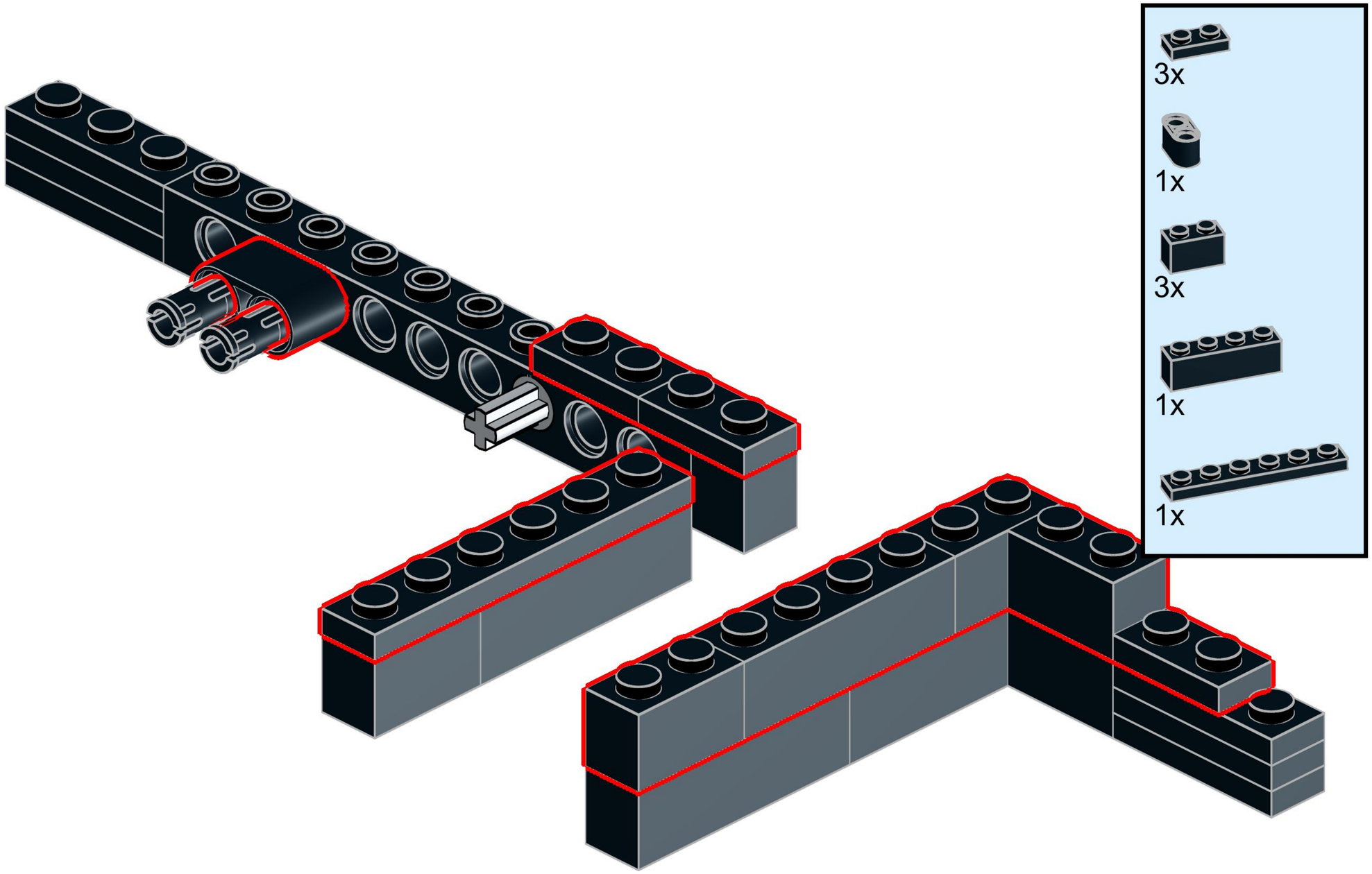

69

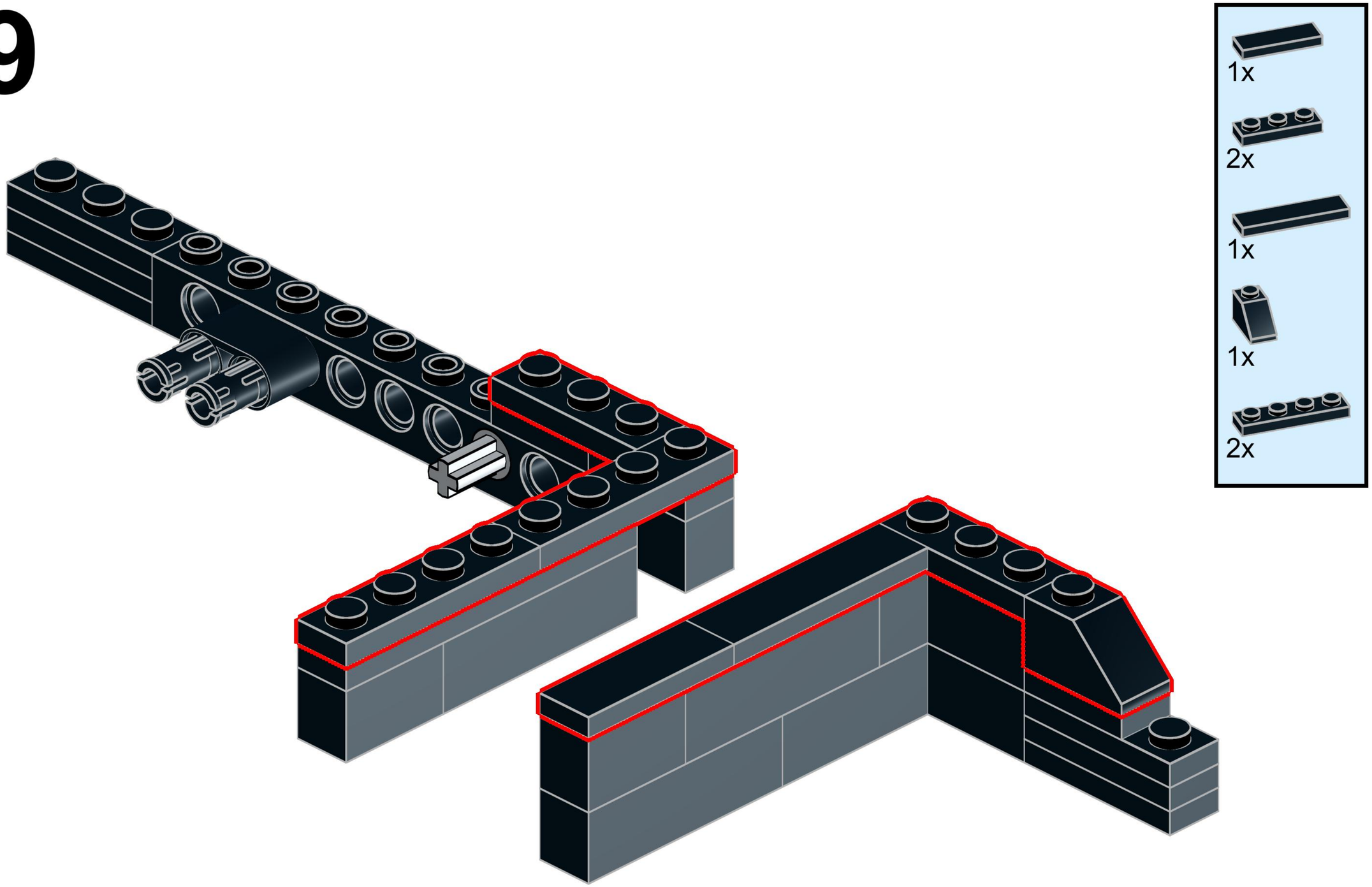

70

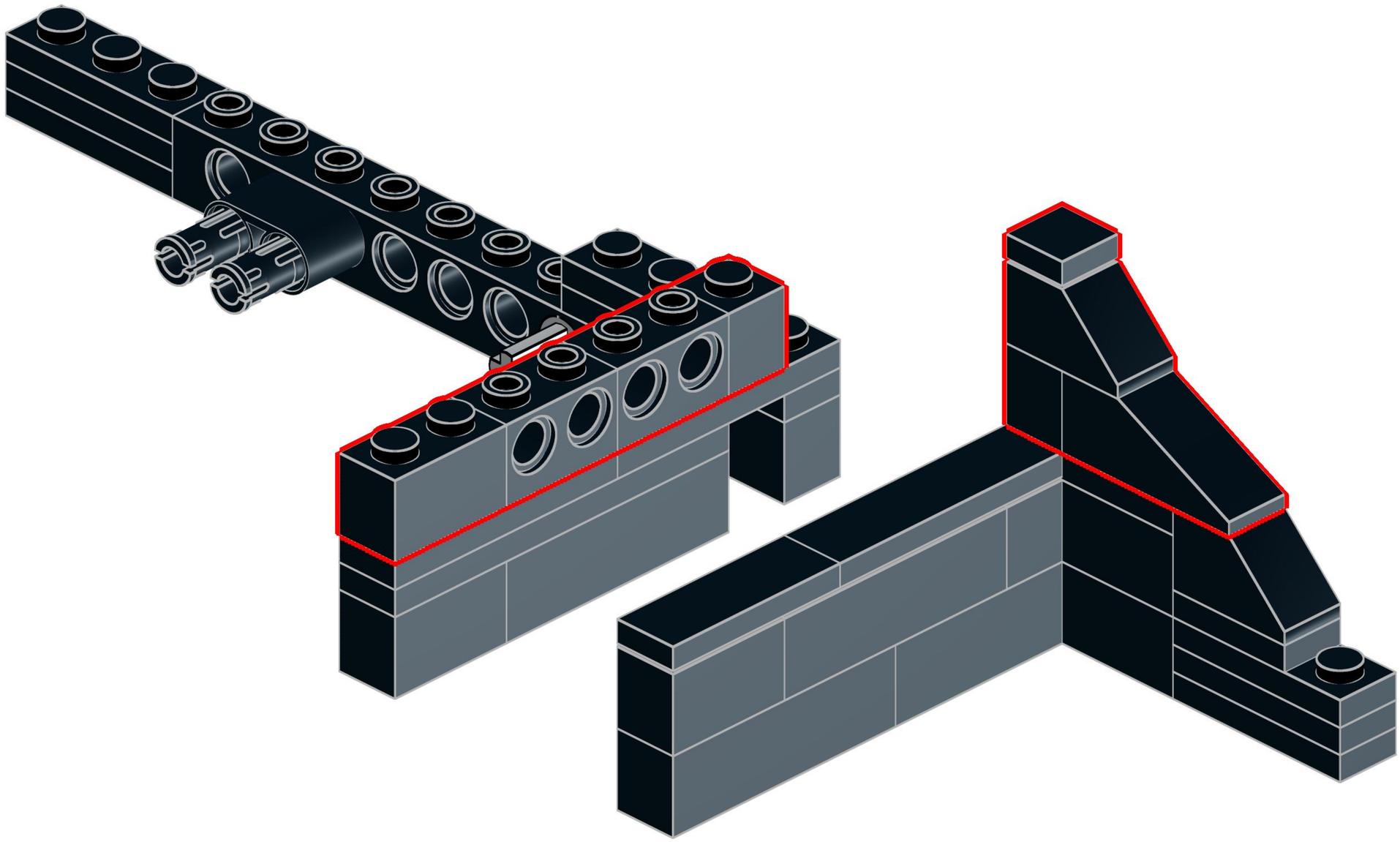

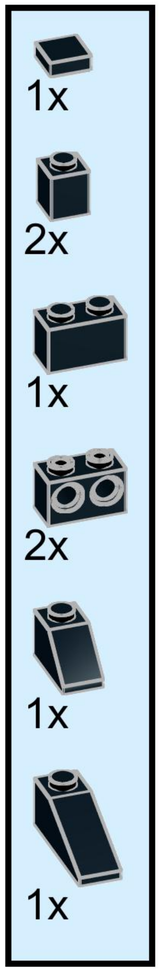

71

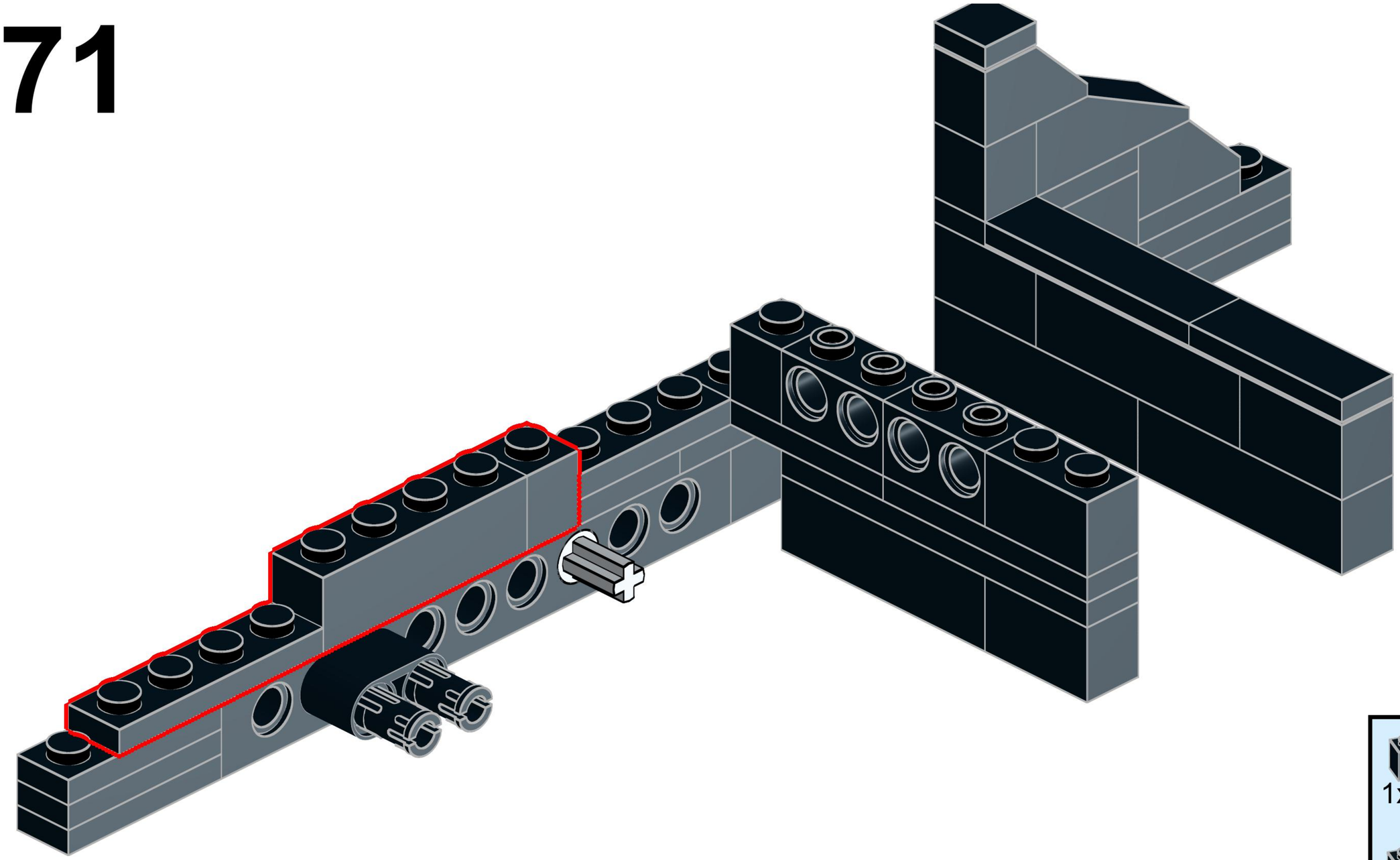

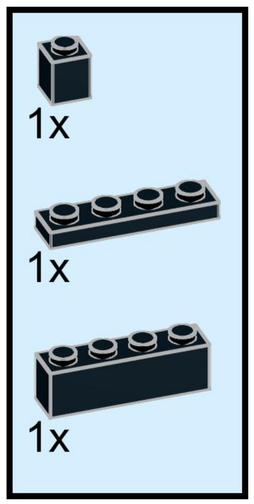

72

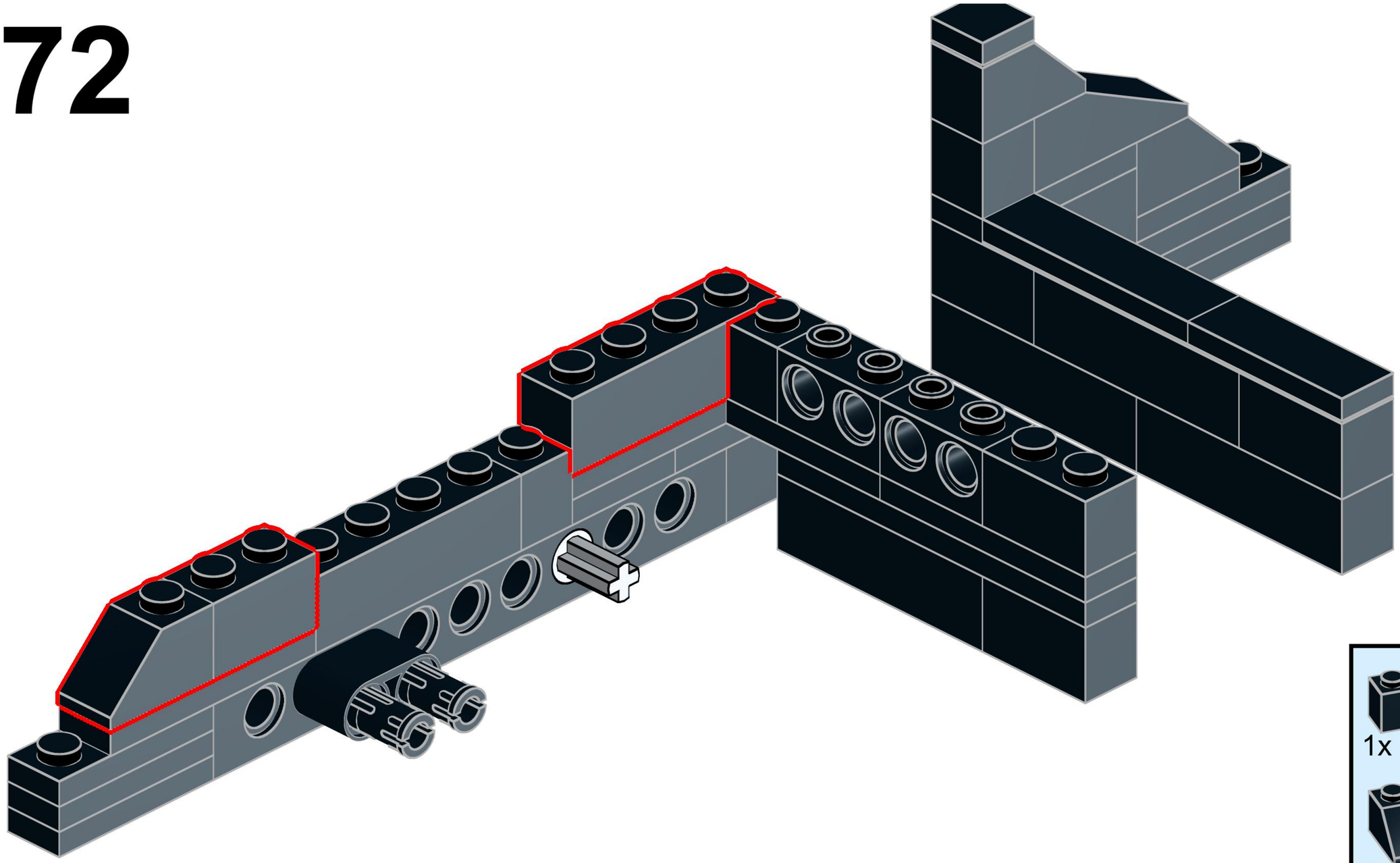

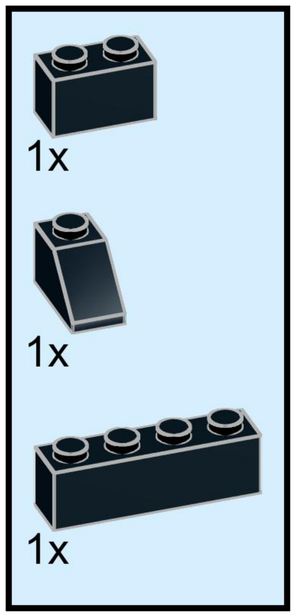

73

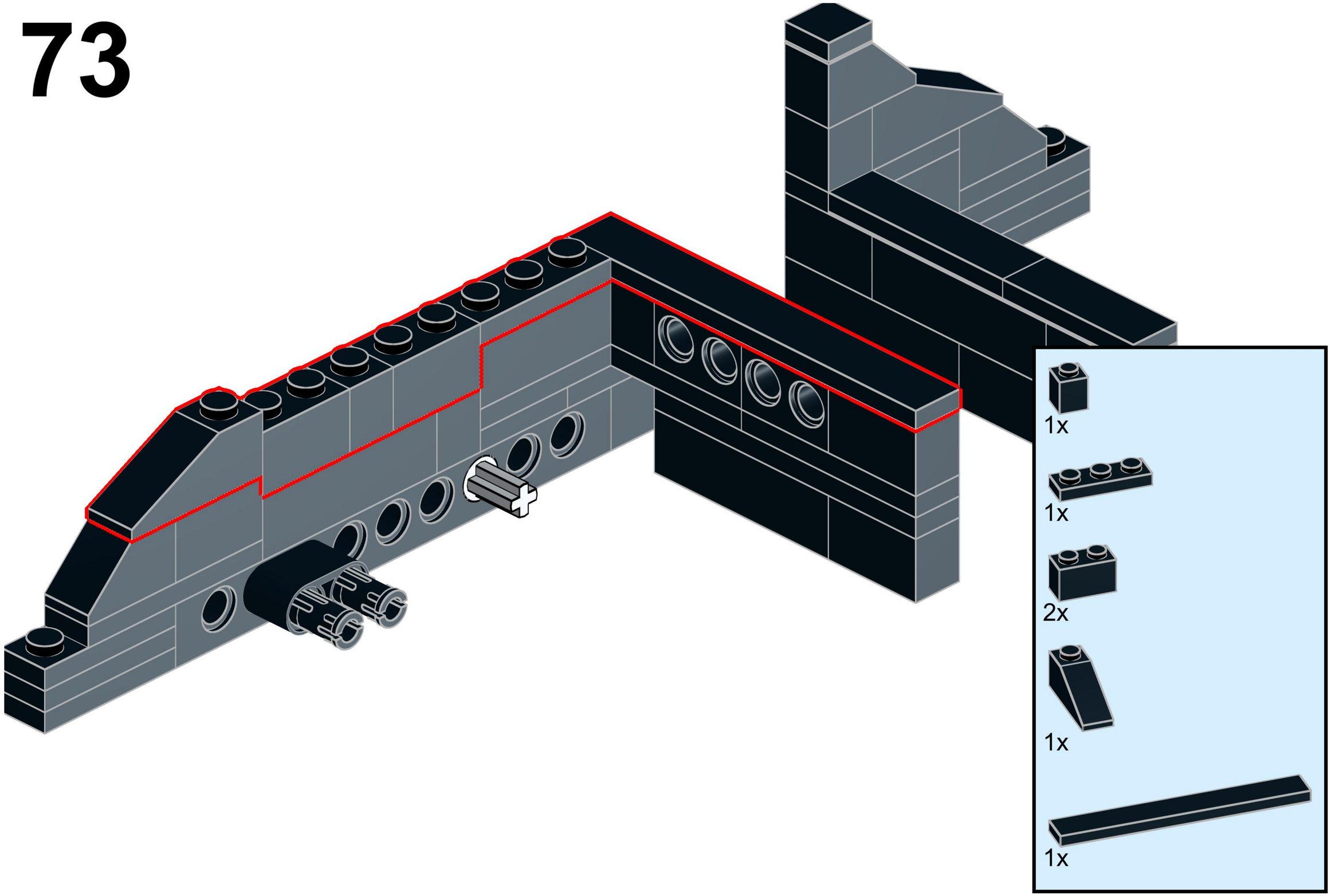

74

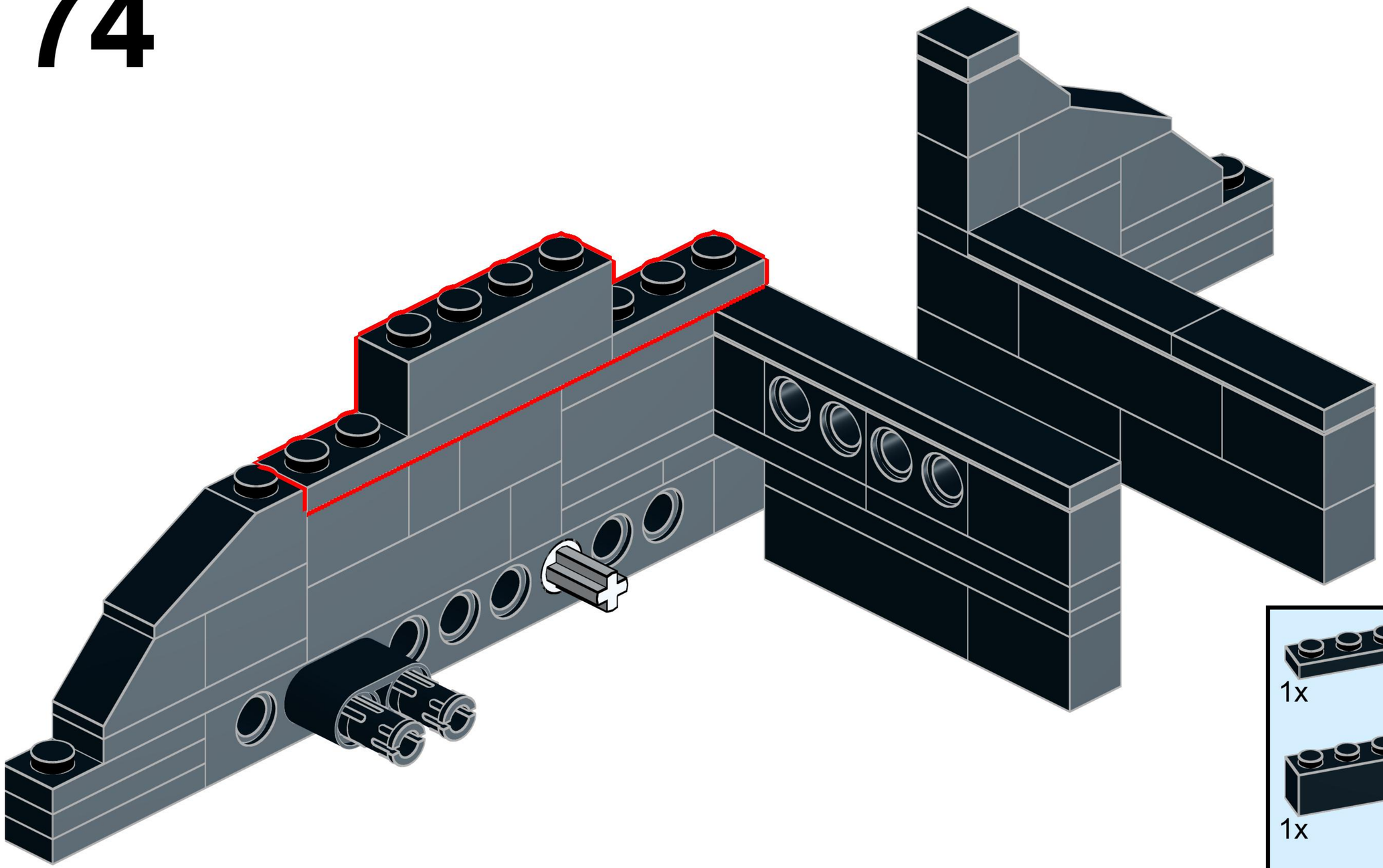

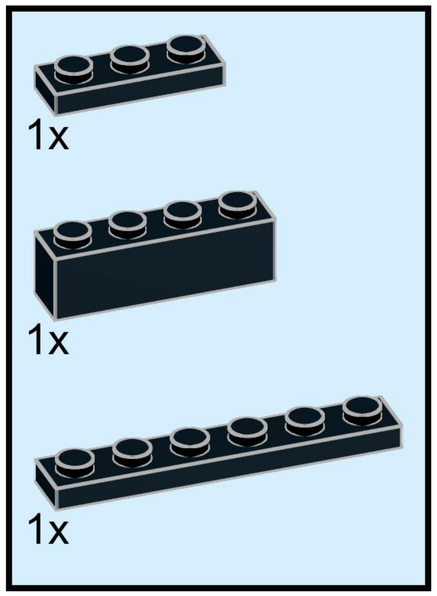

75

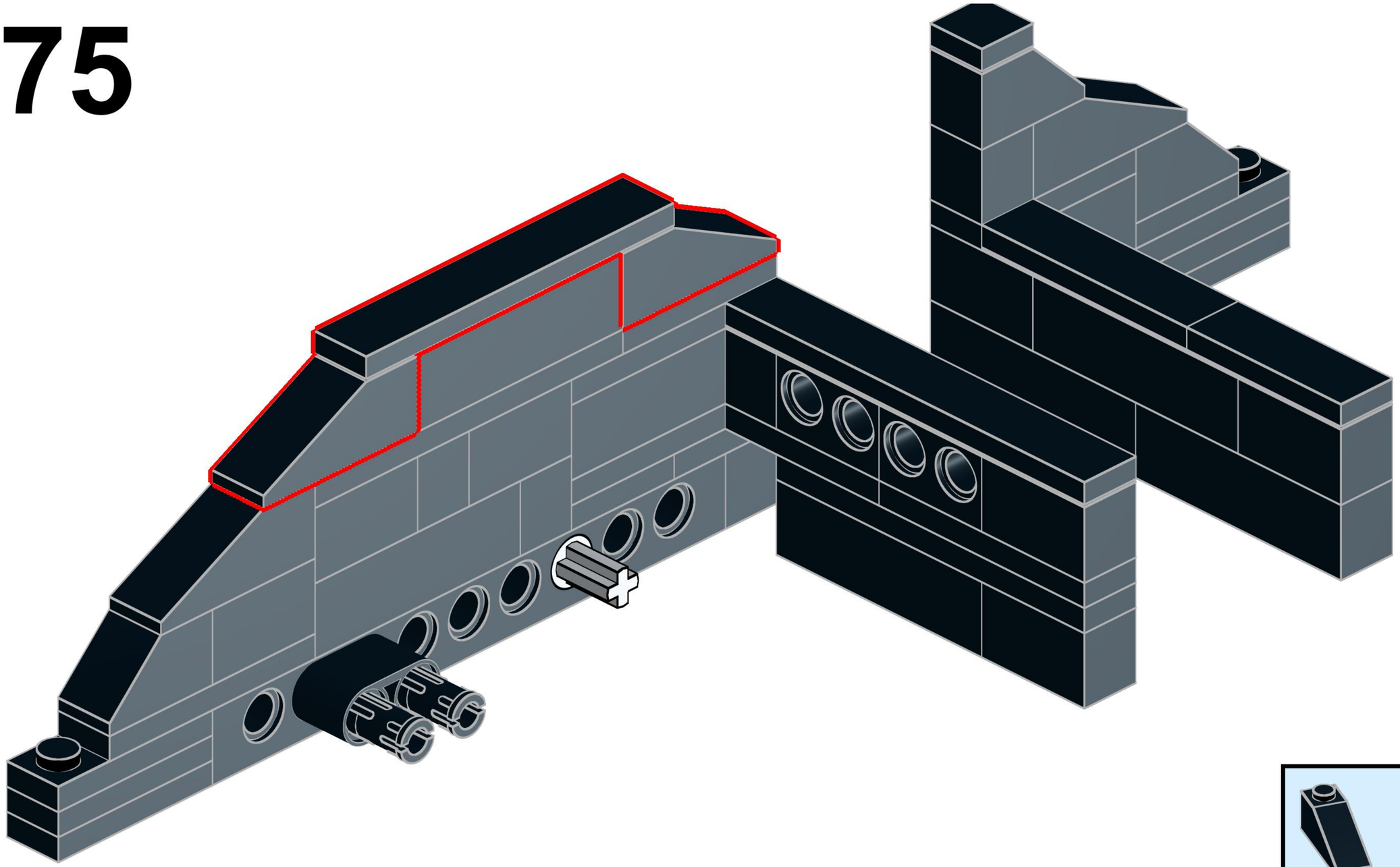

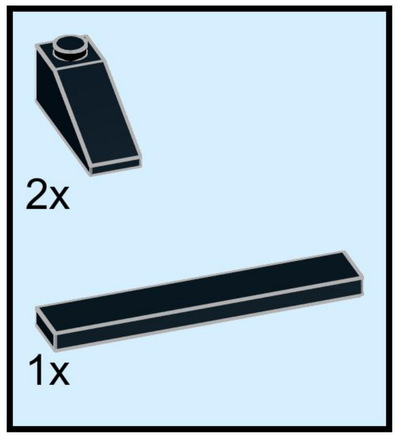

76

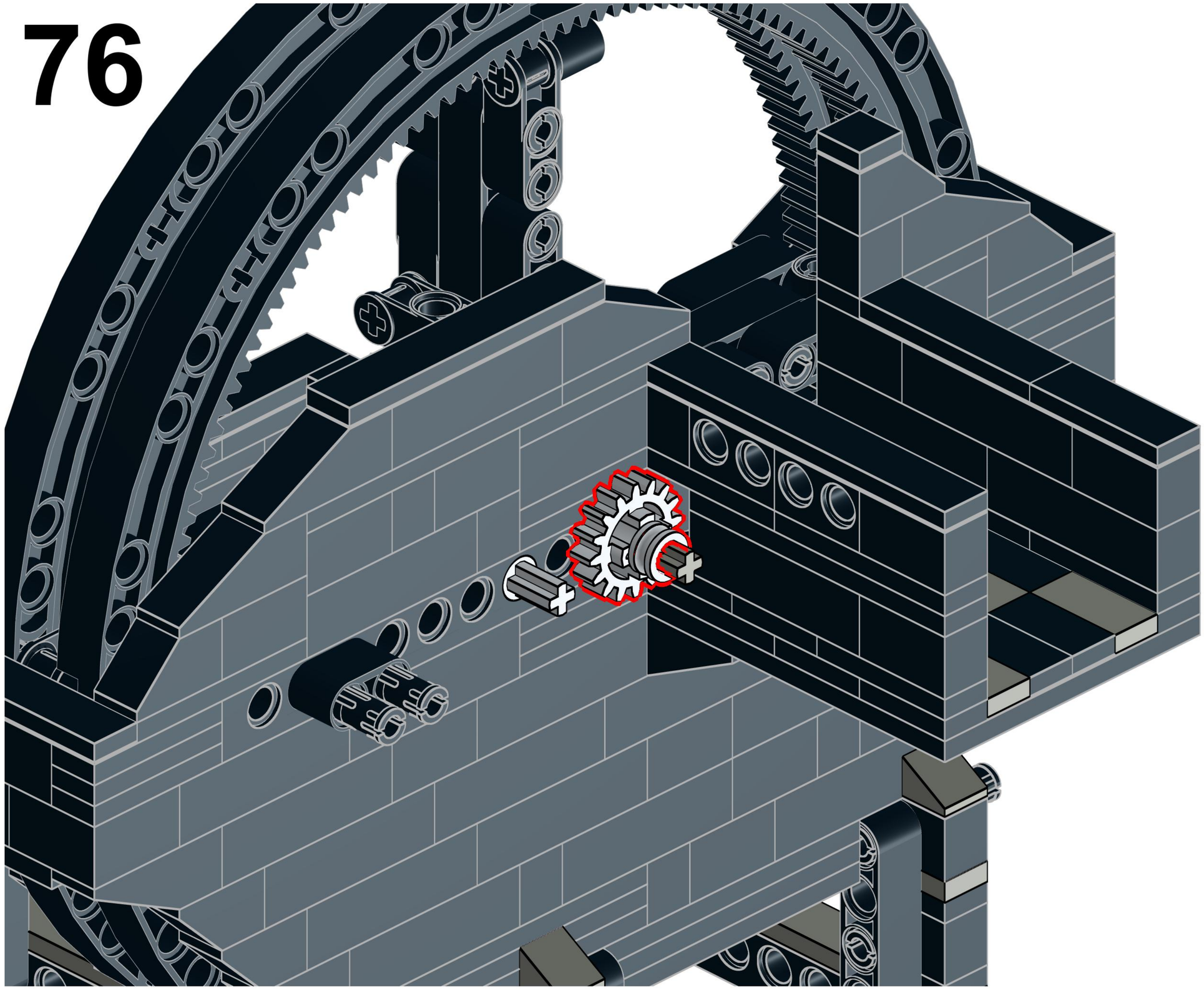

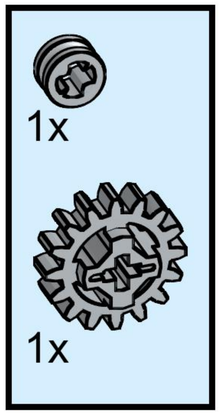

77

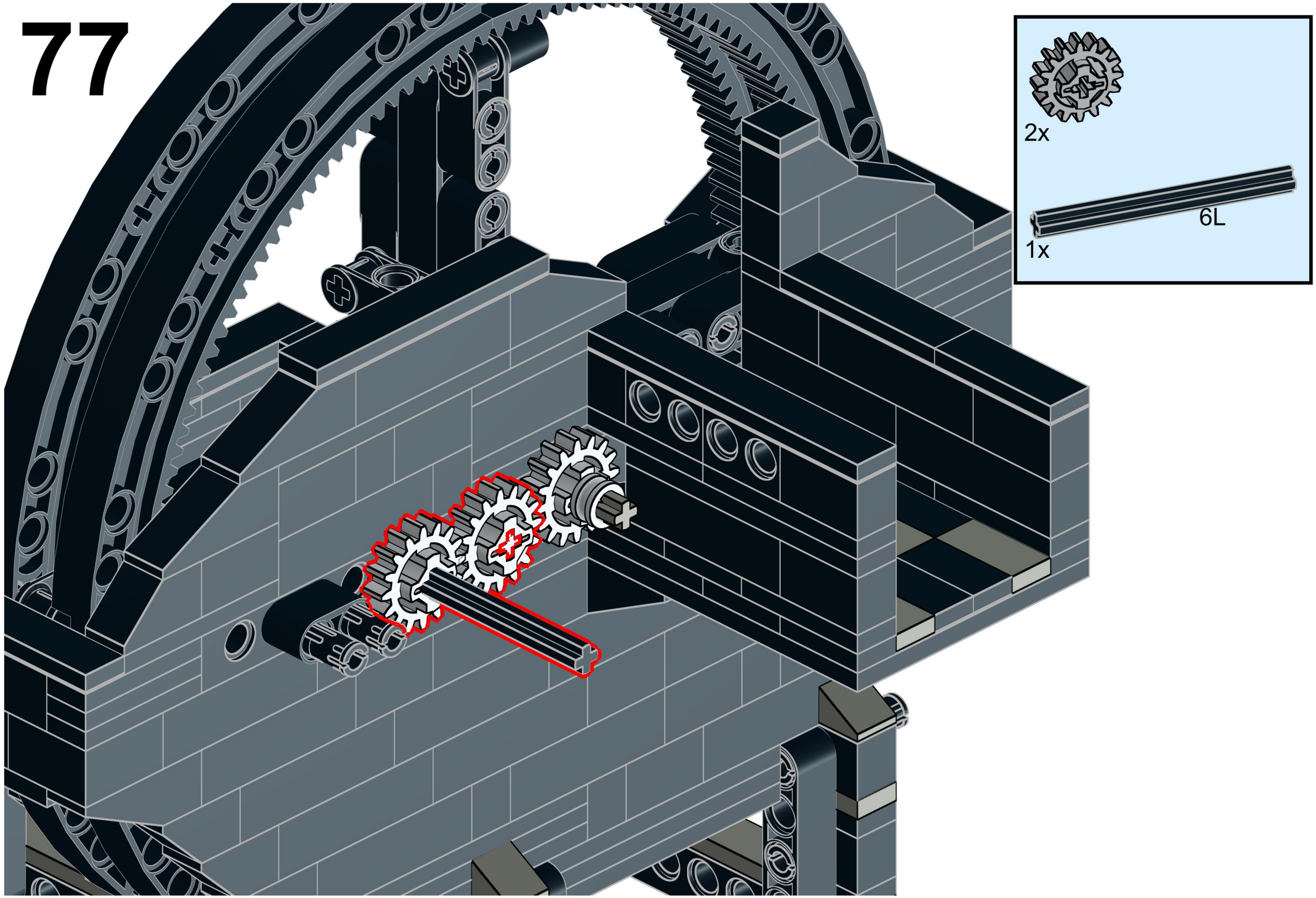

78

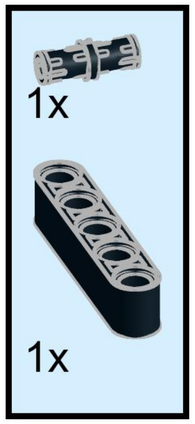

79

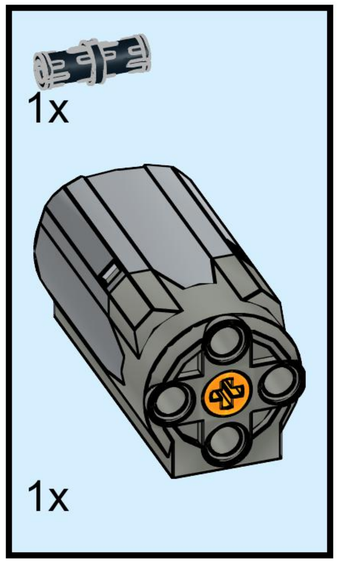

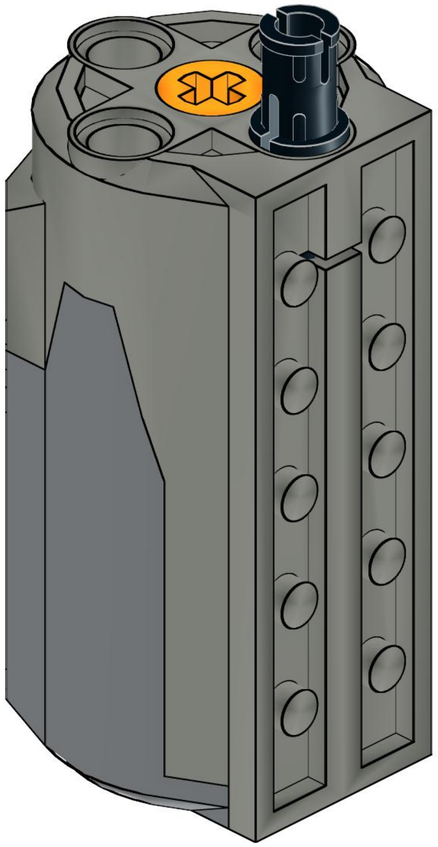

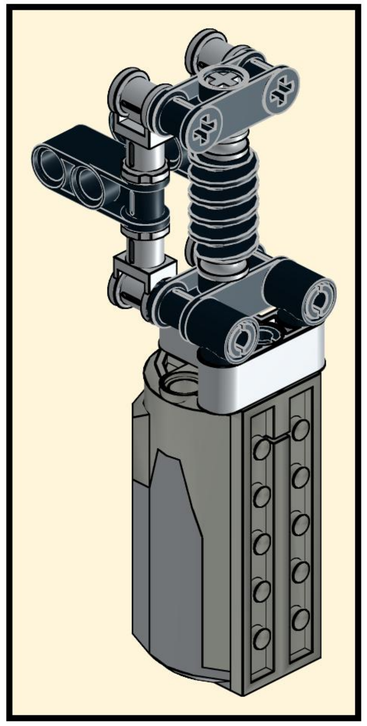

80

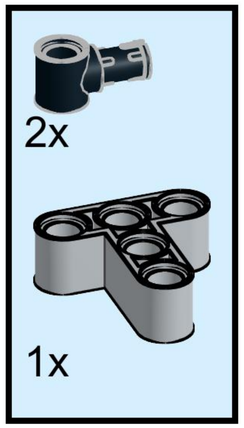

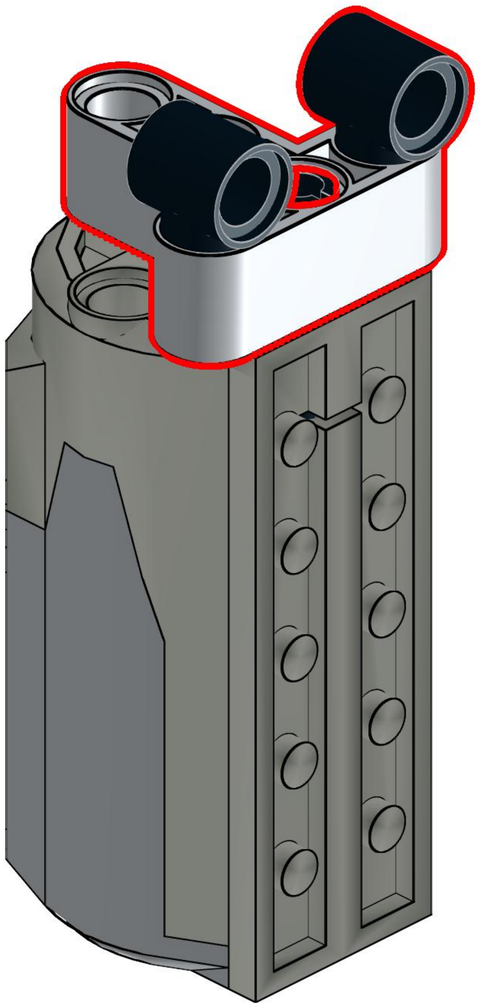

81

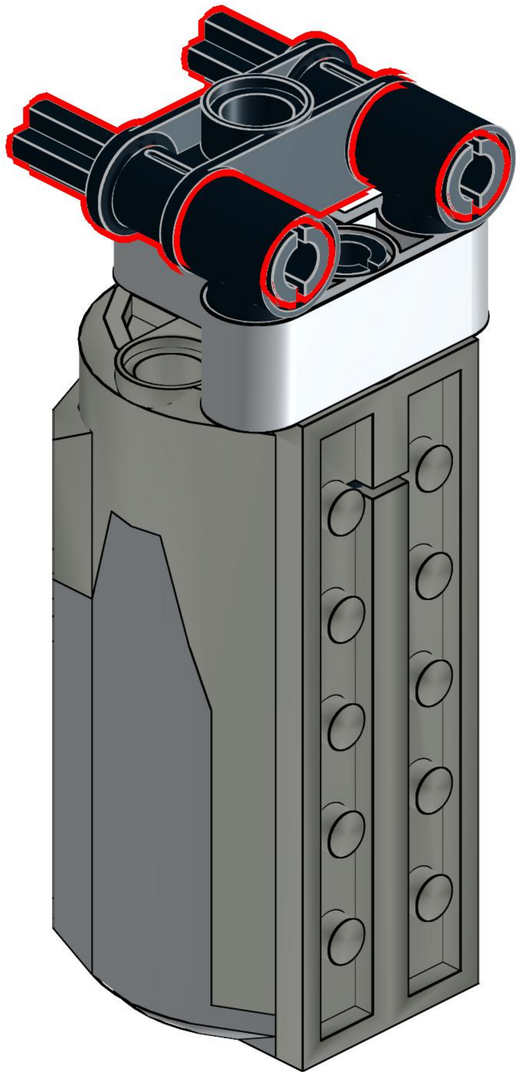

82

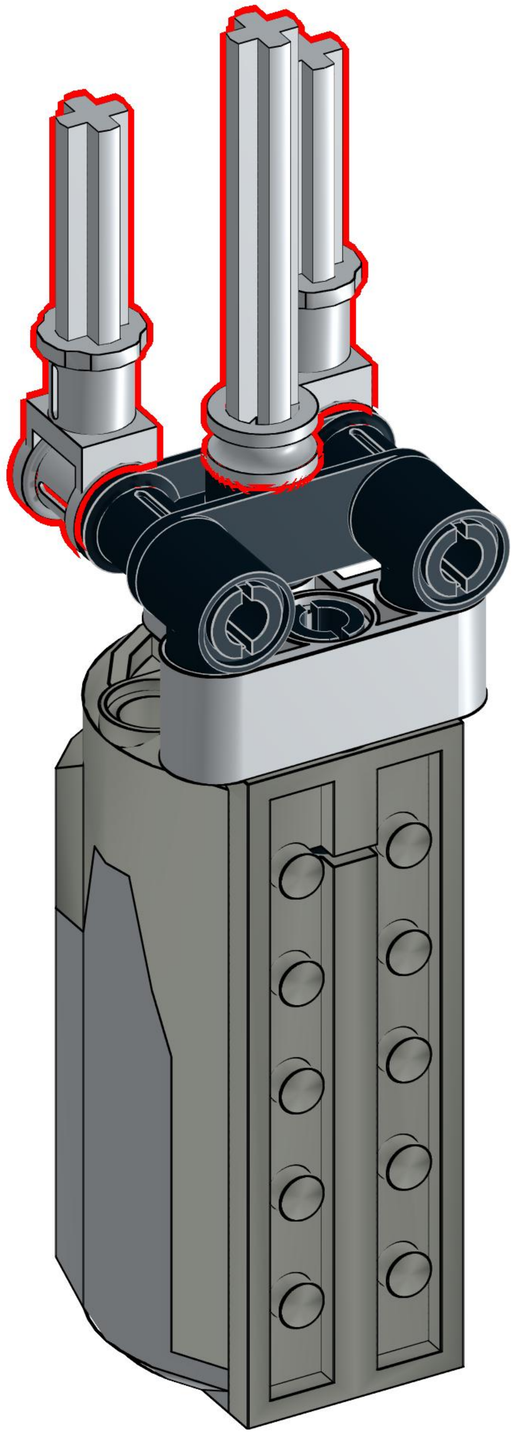

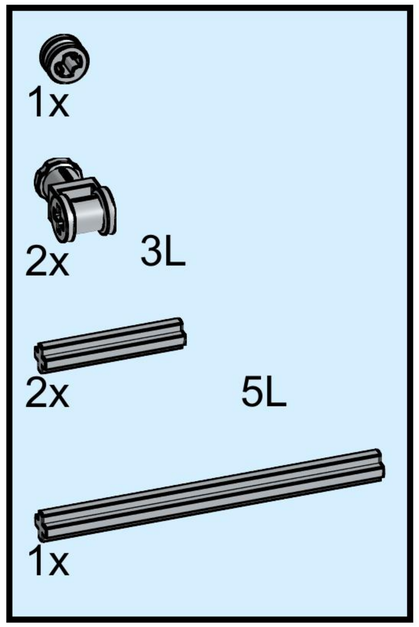

83

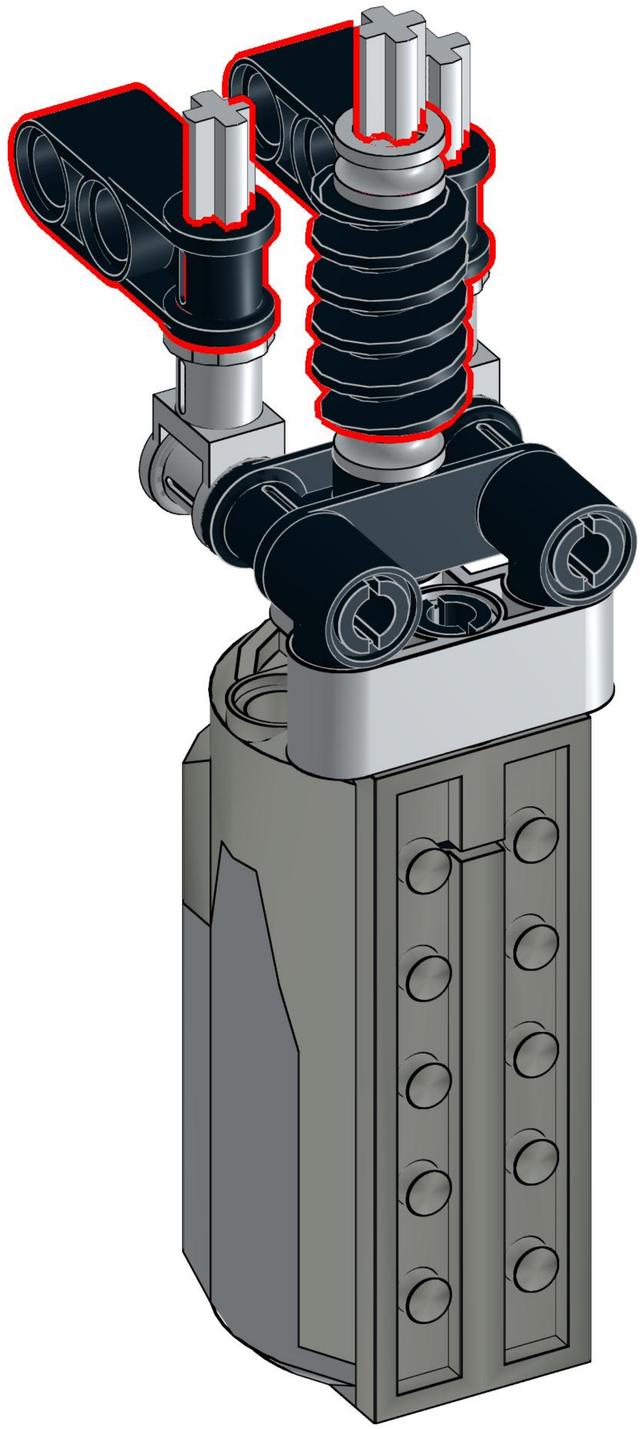

84

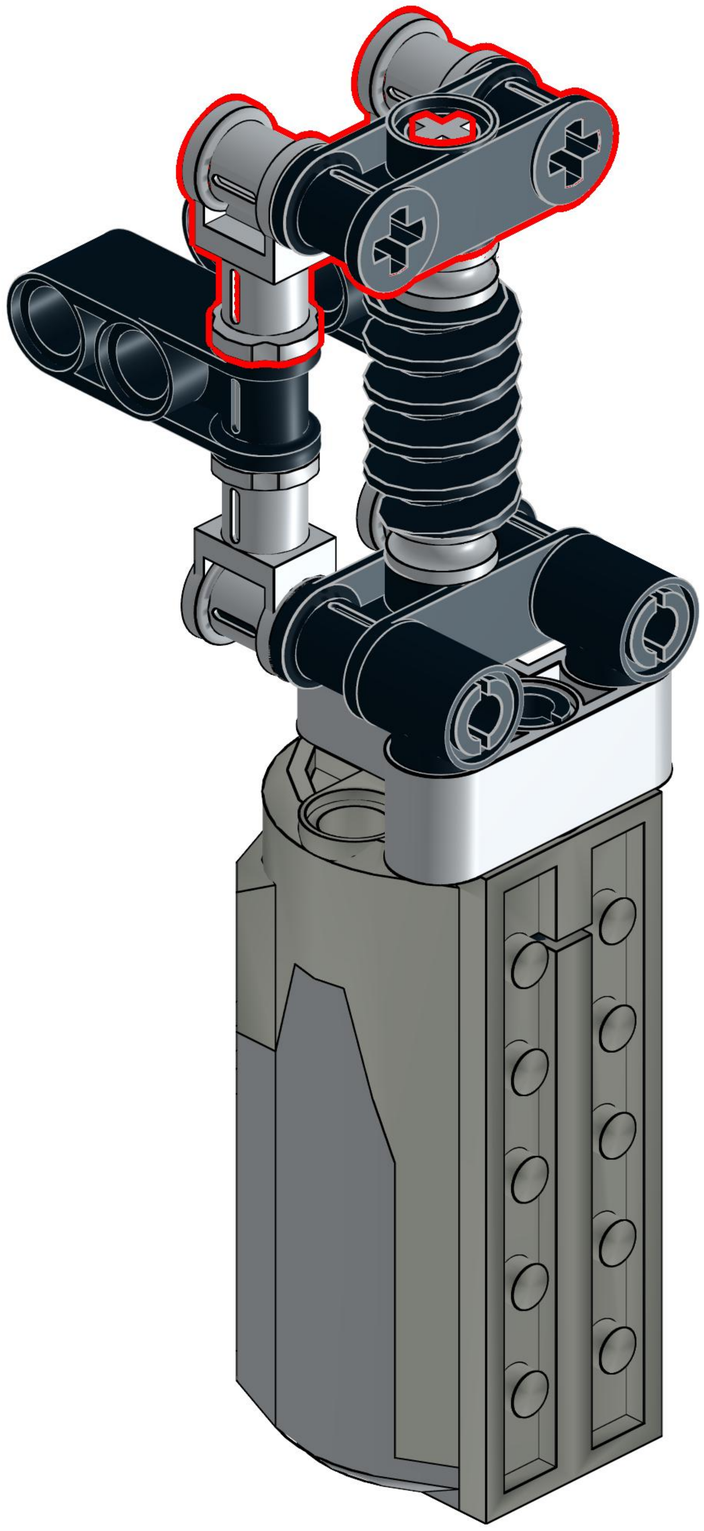

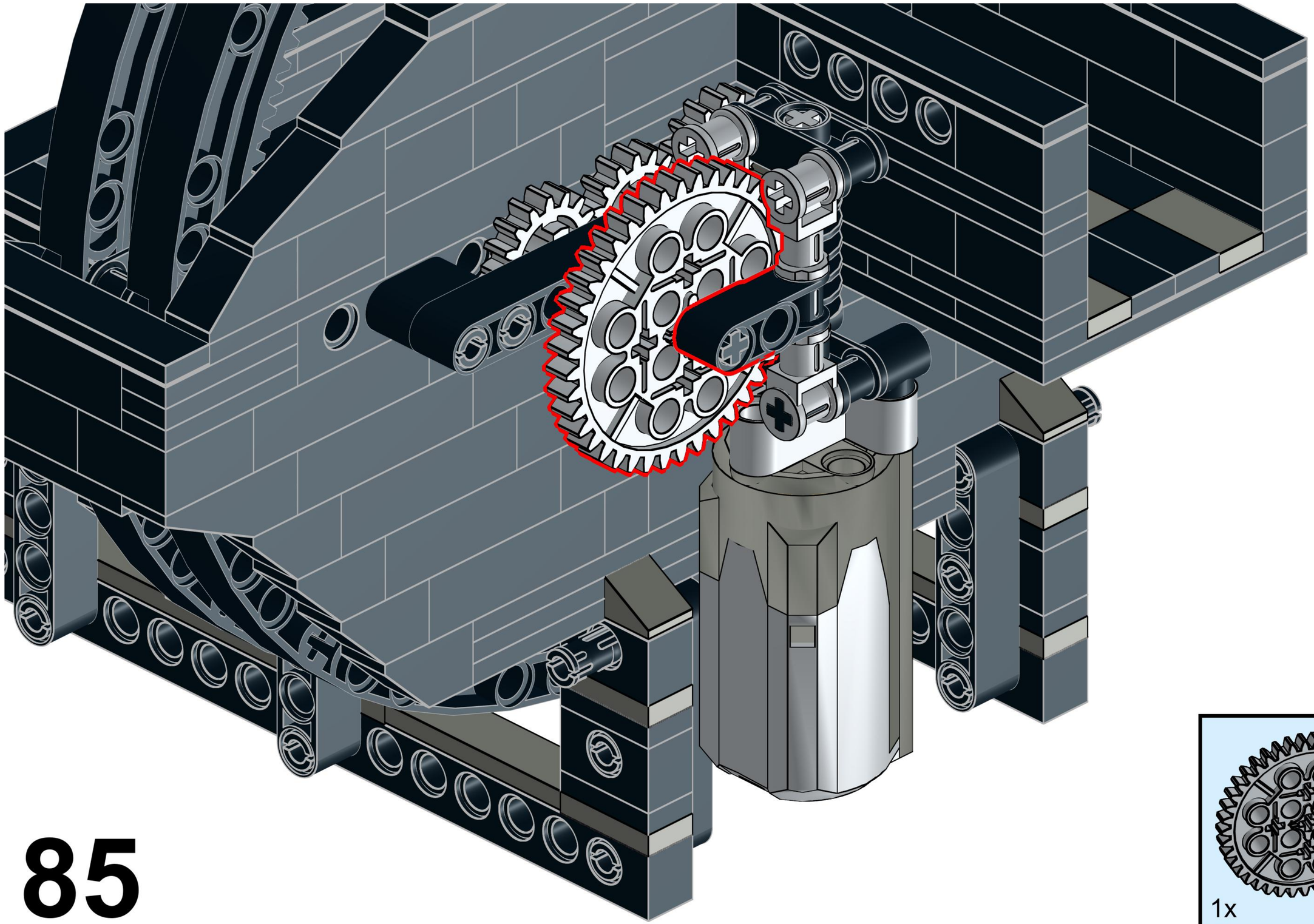

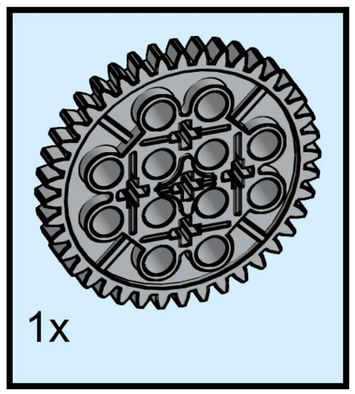
1x

86

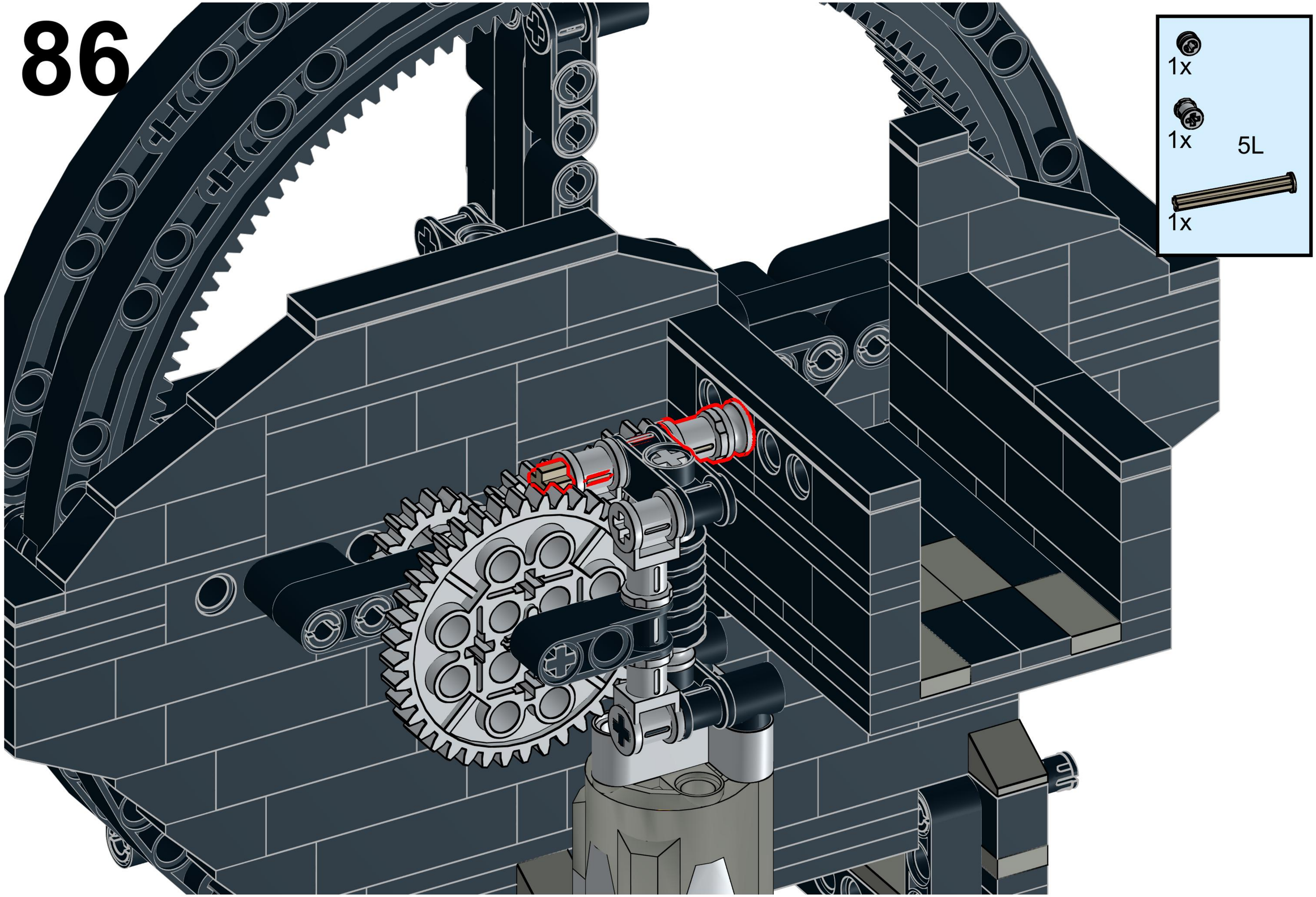

87

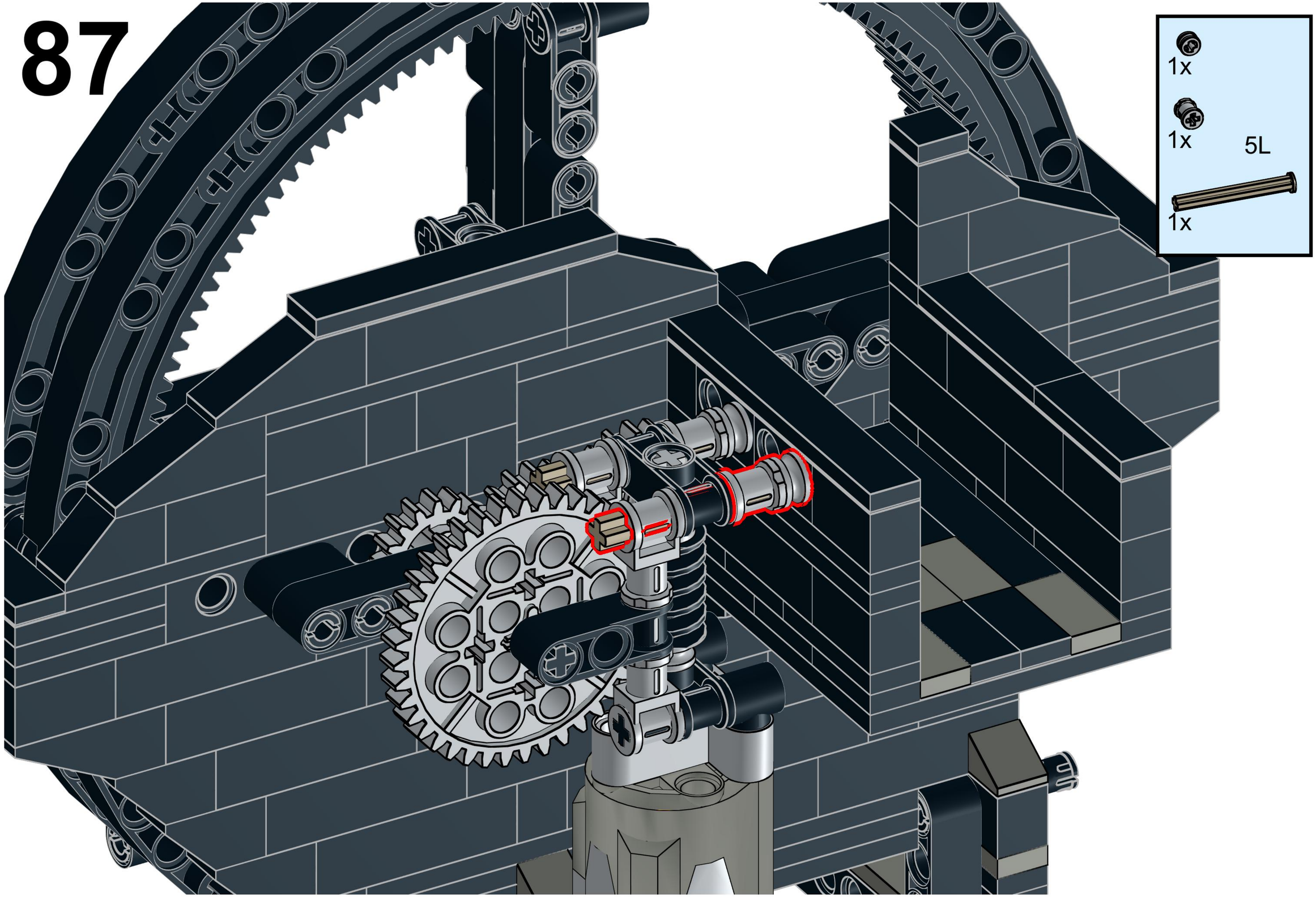

88

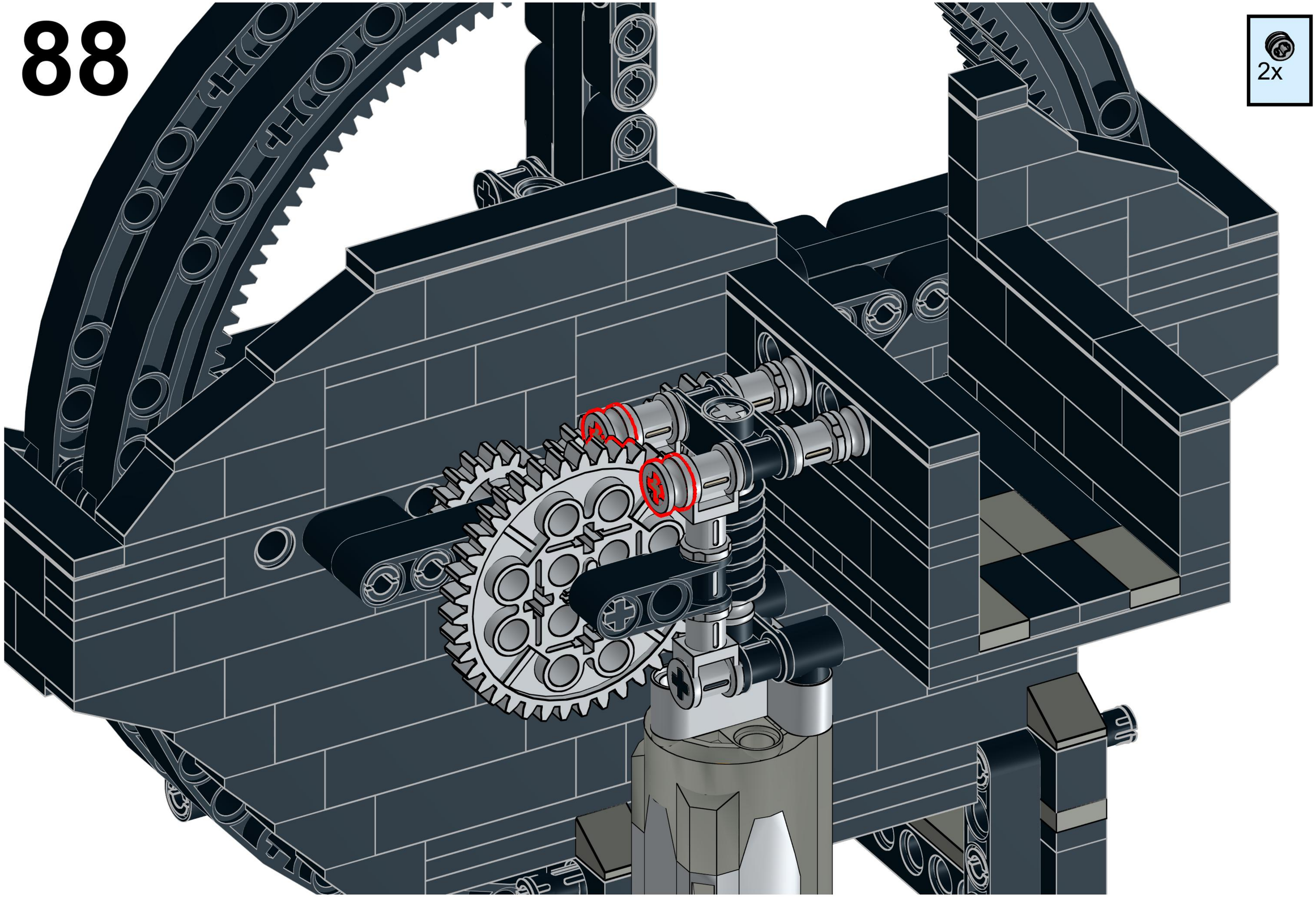

89

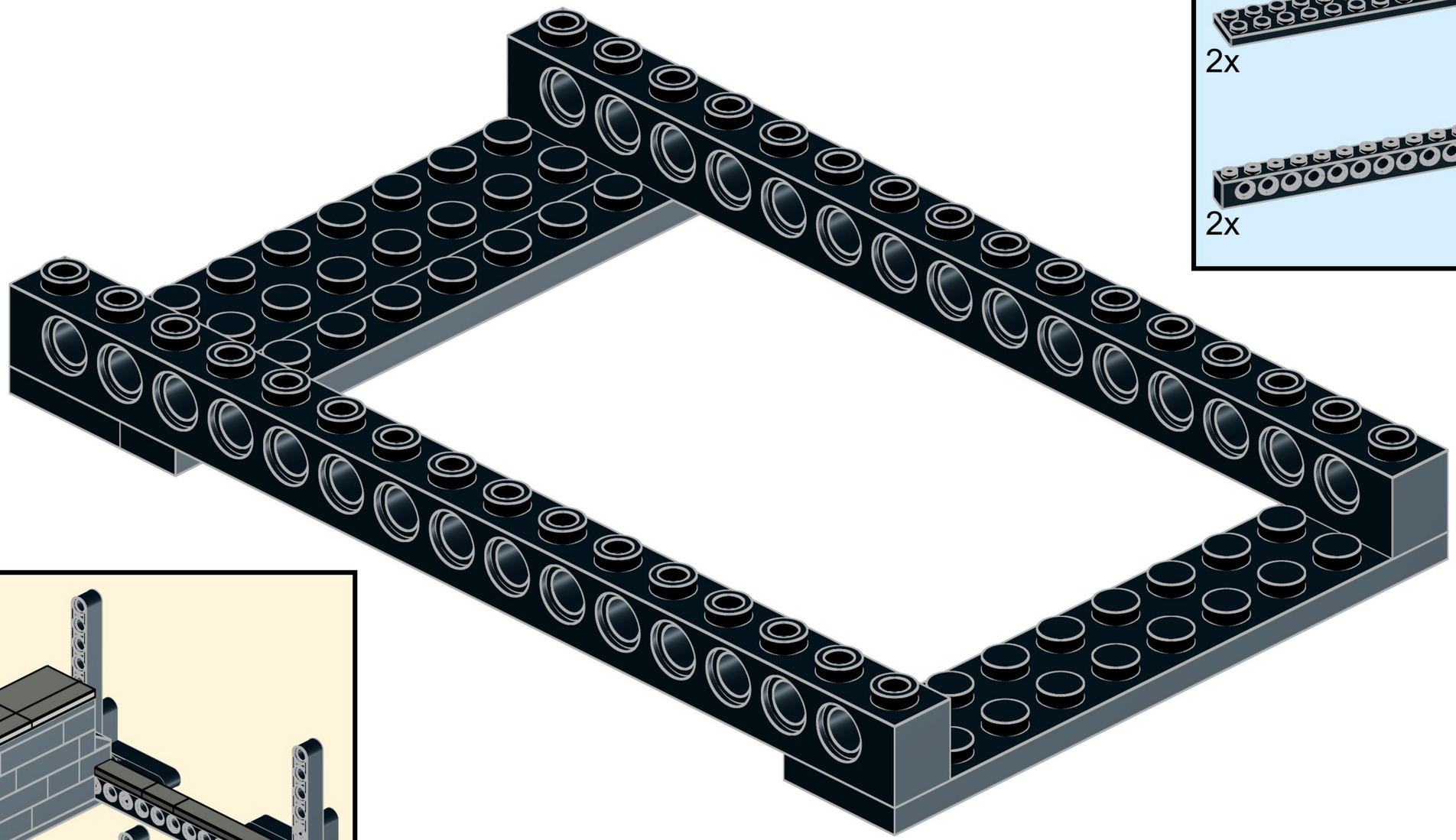

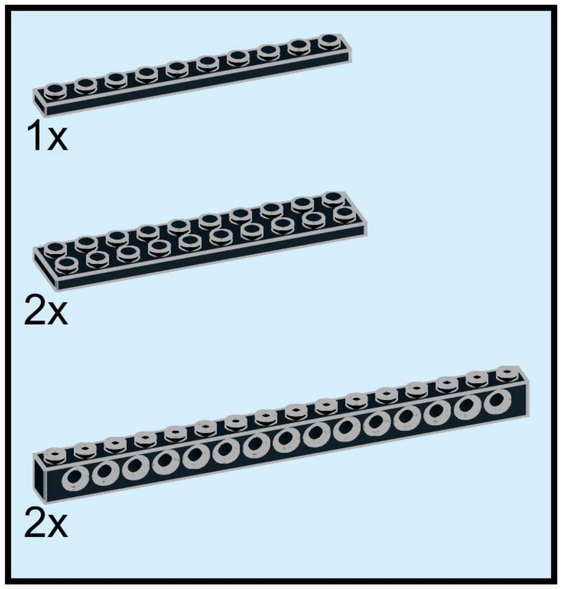

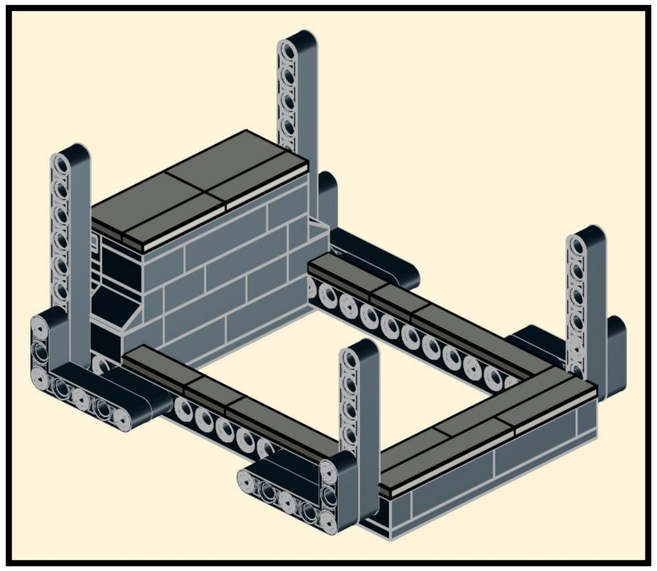

90

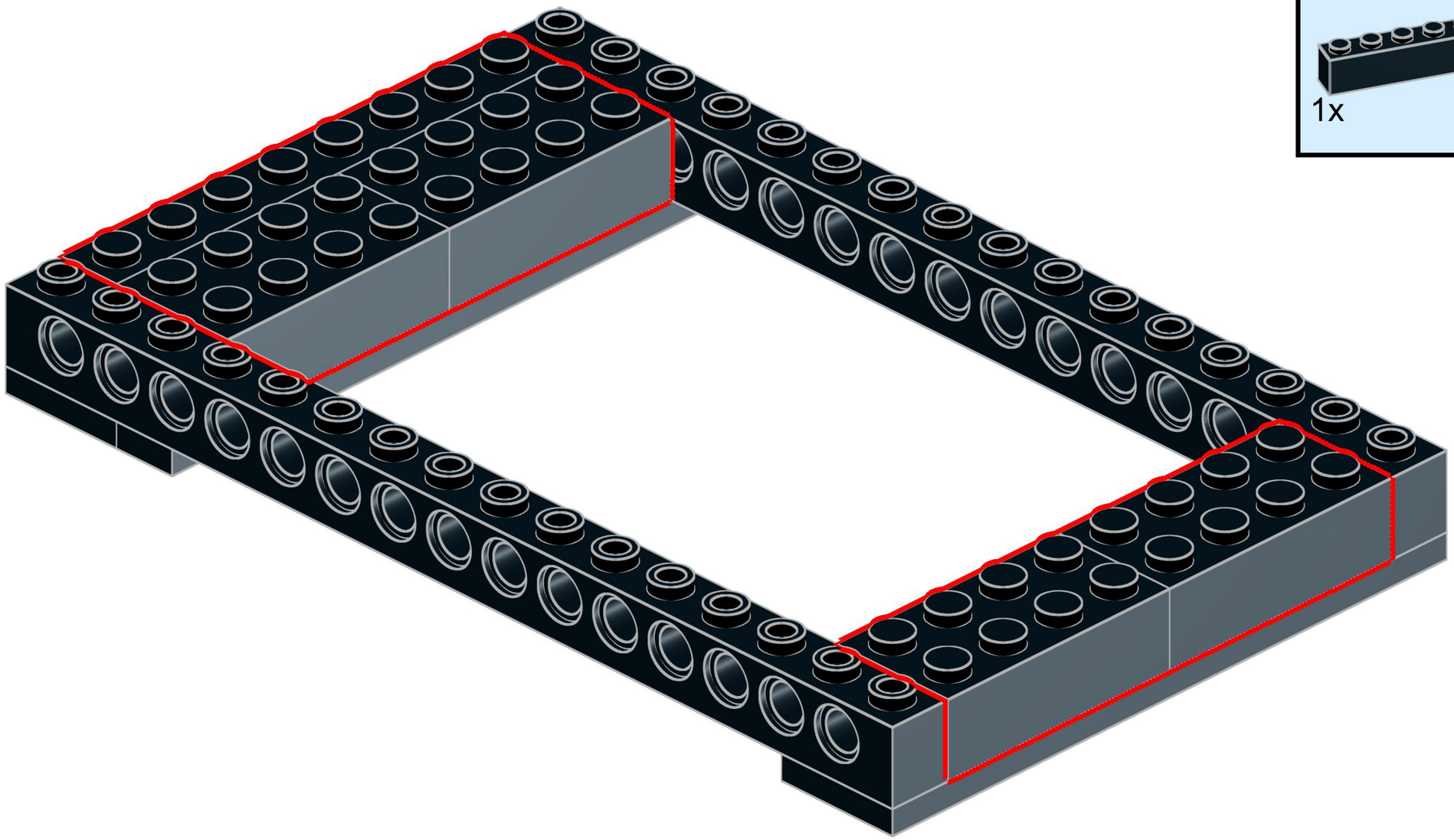

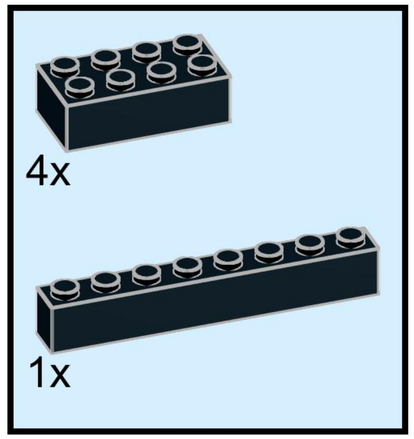

91

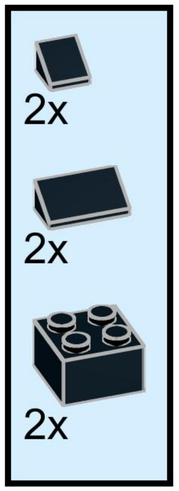

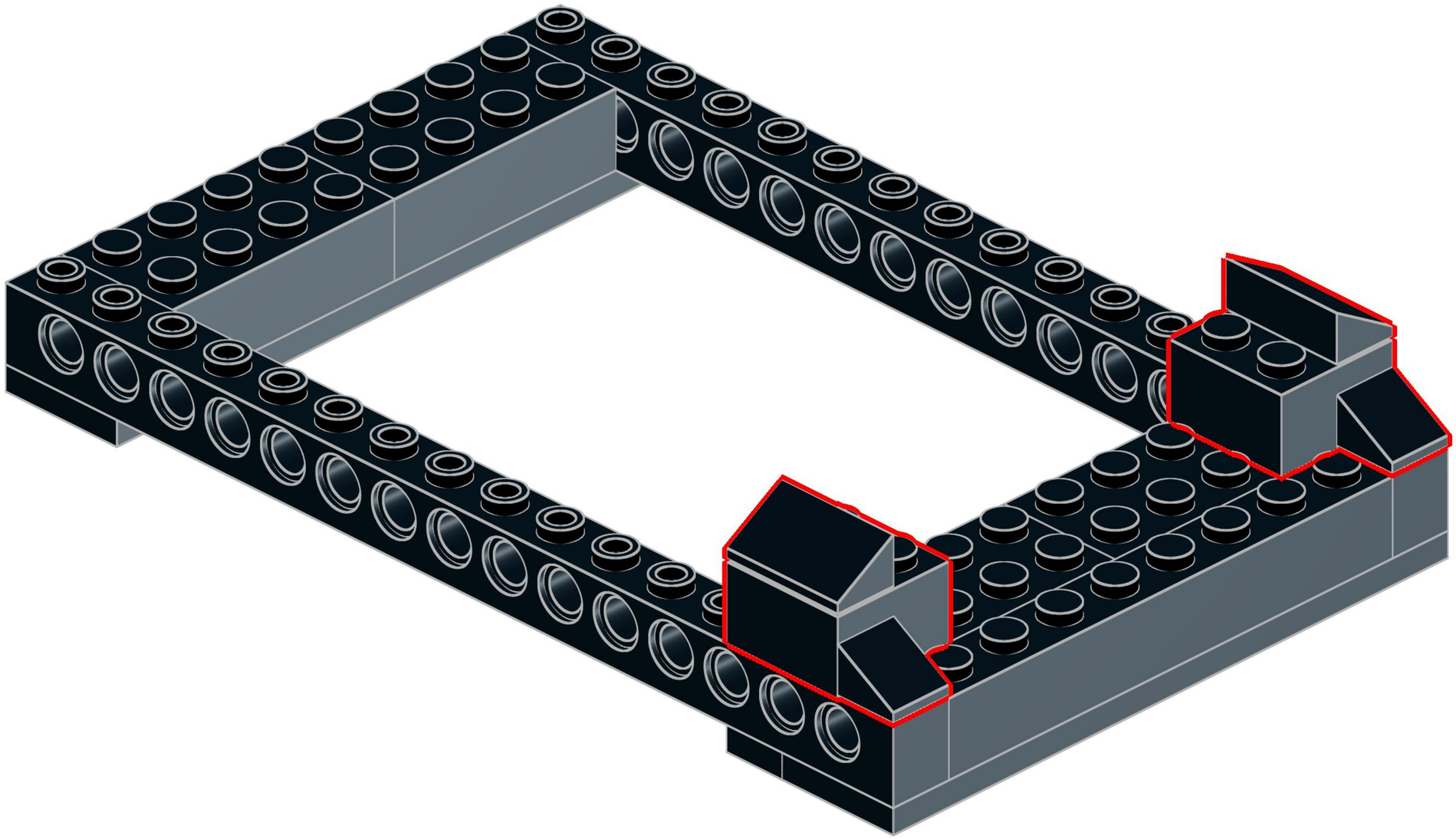

92

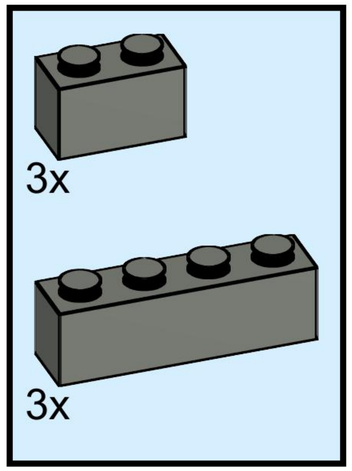

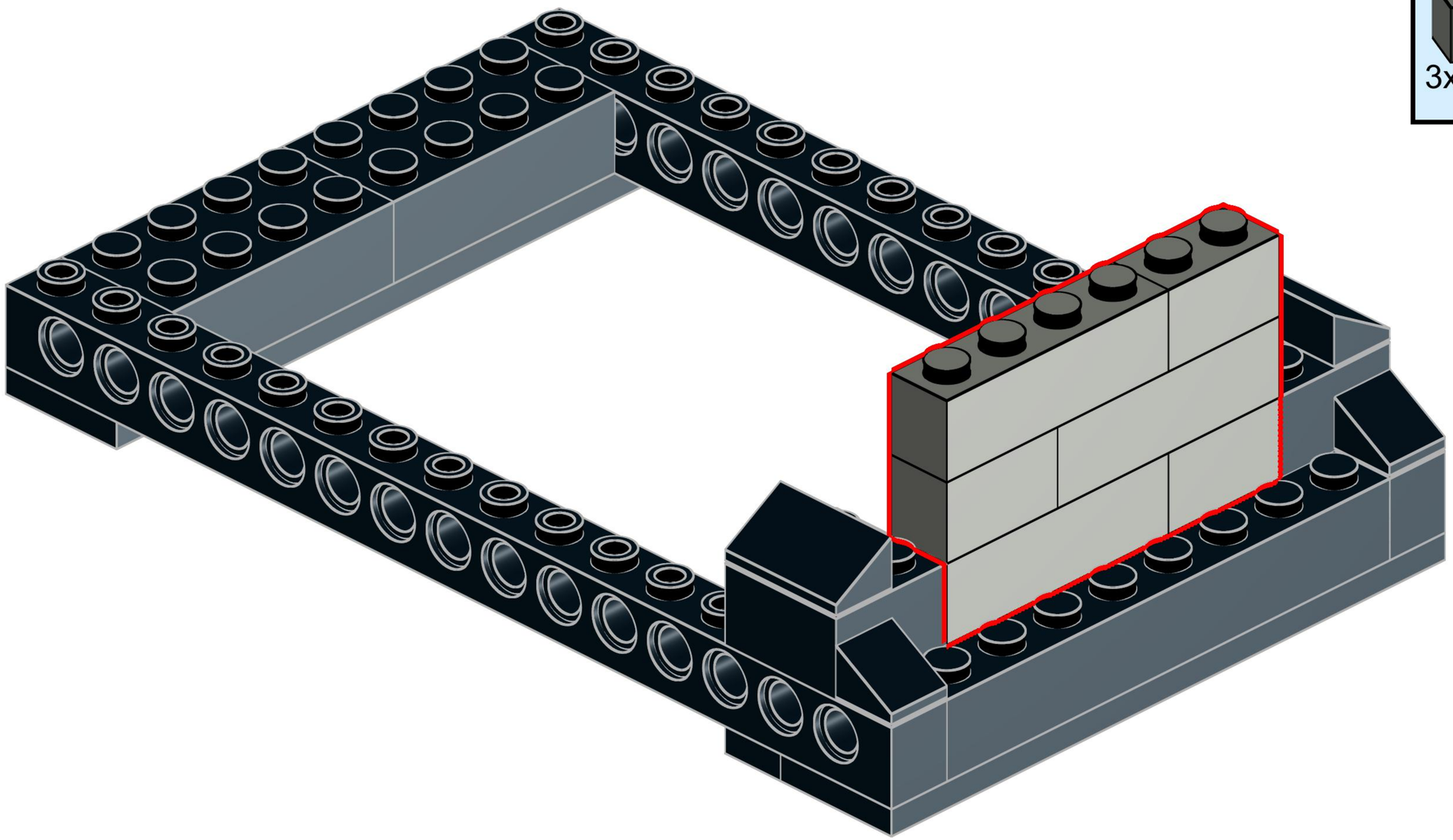

93

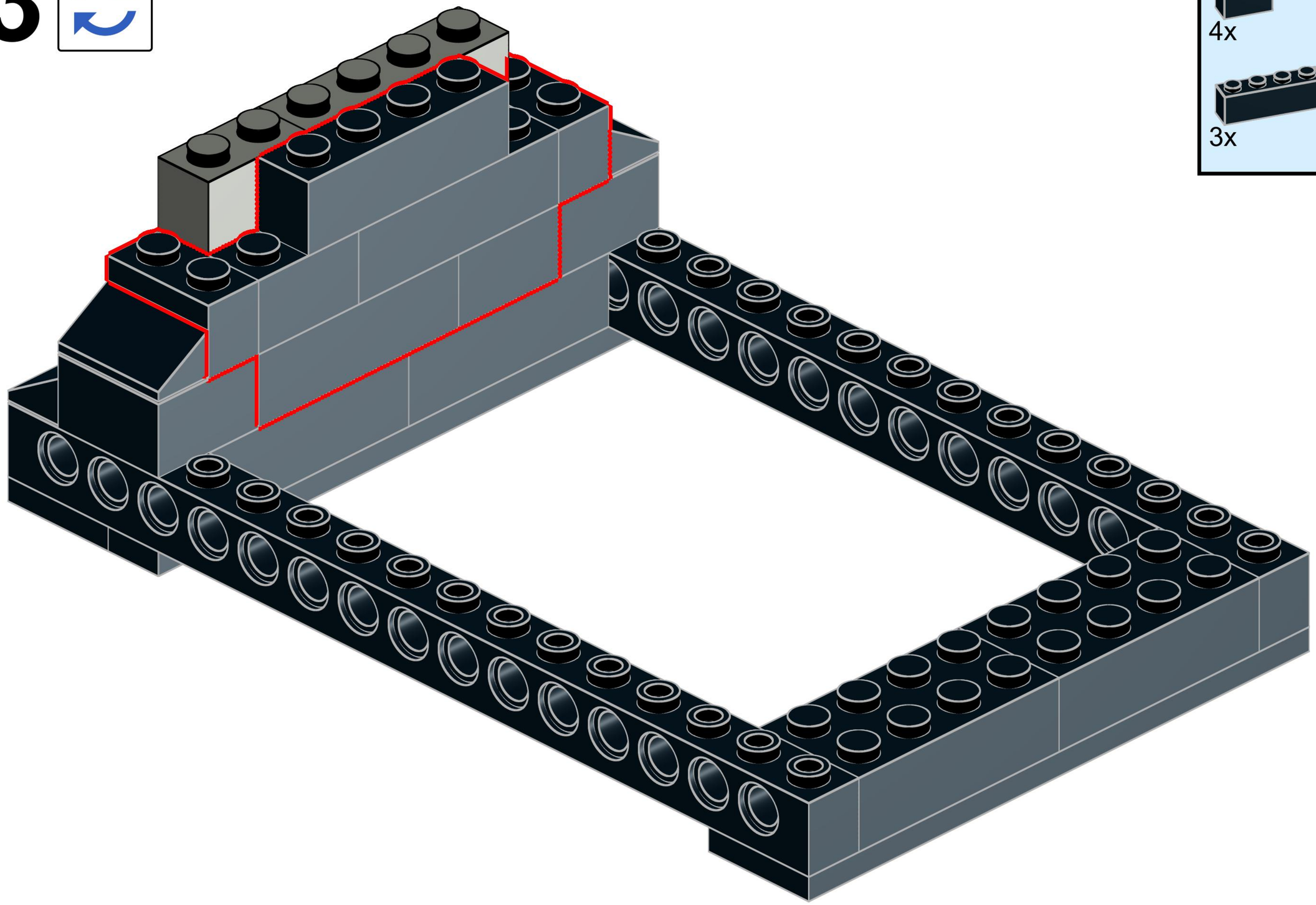

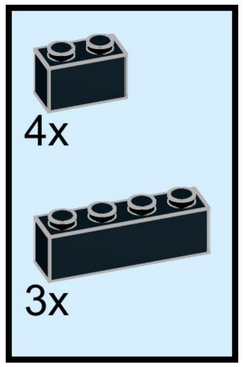

94

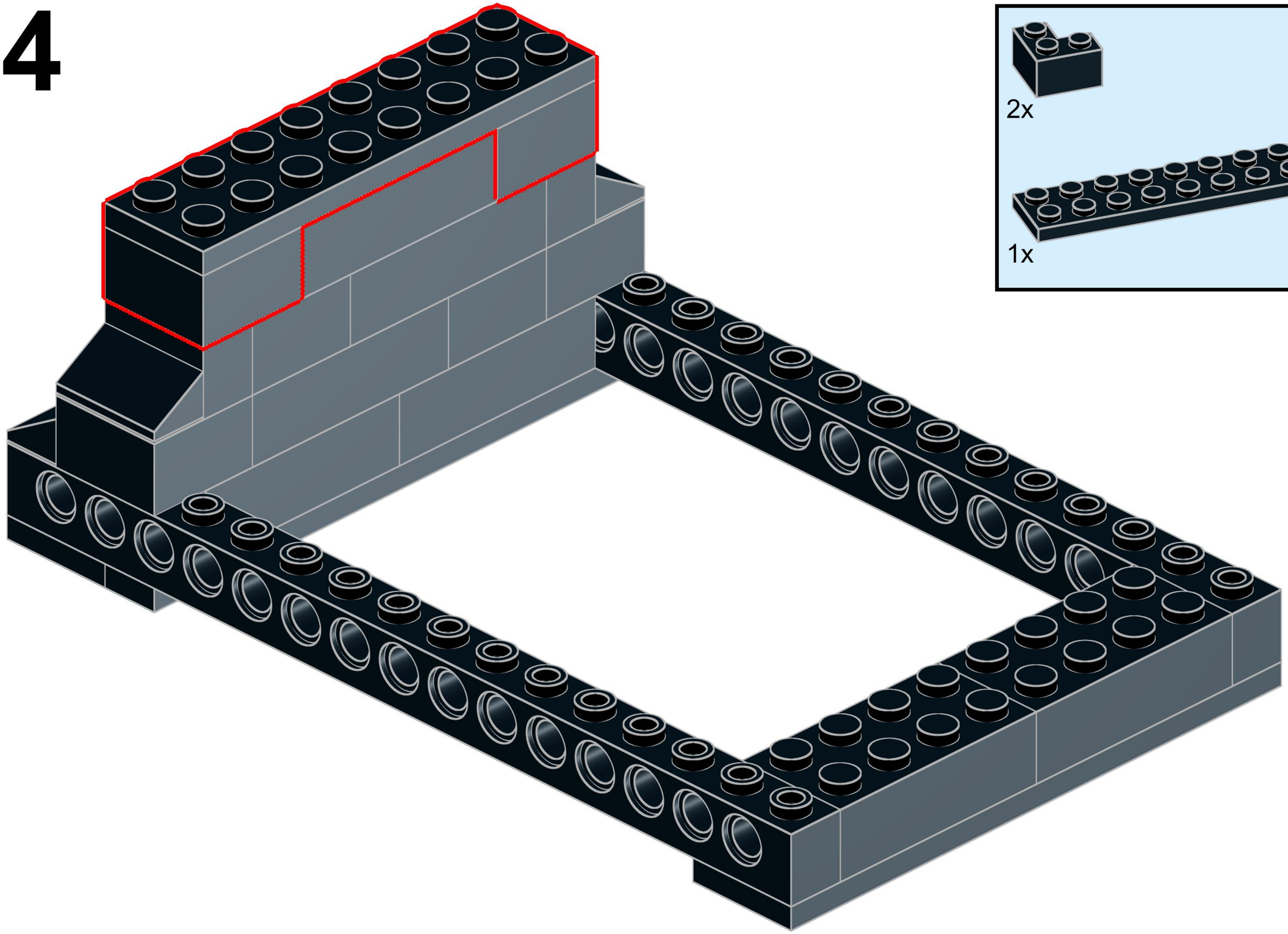

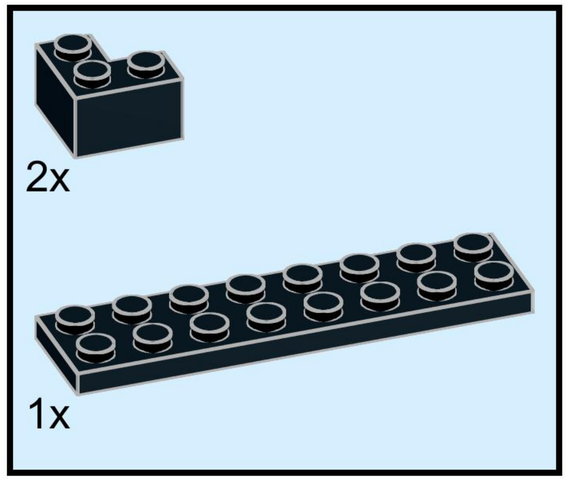

95

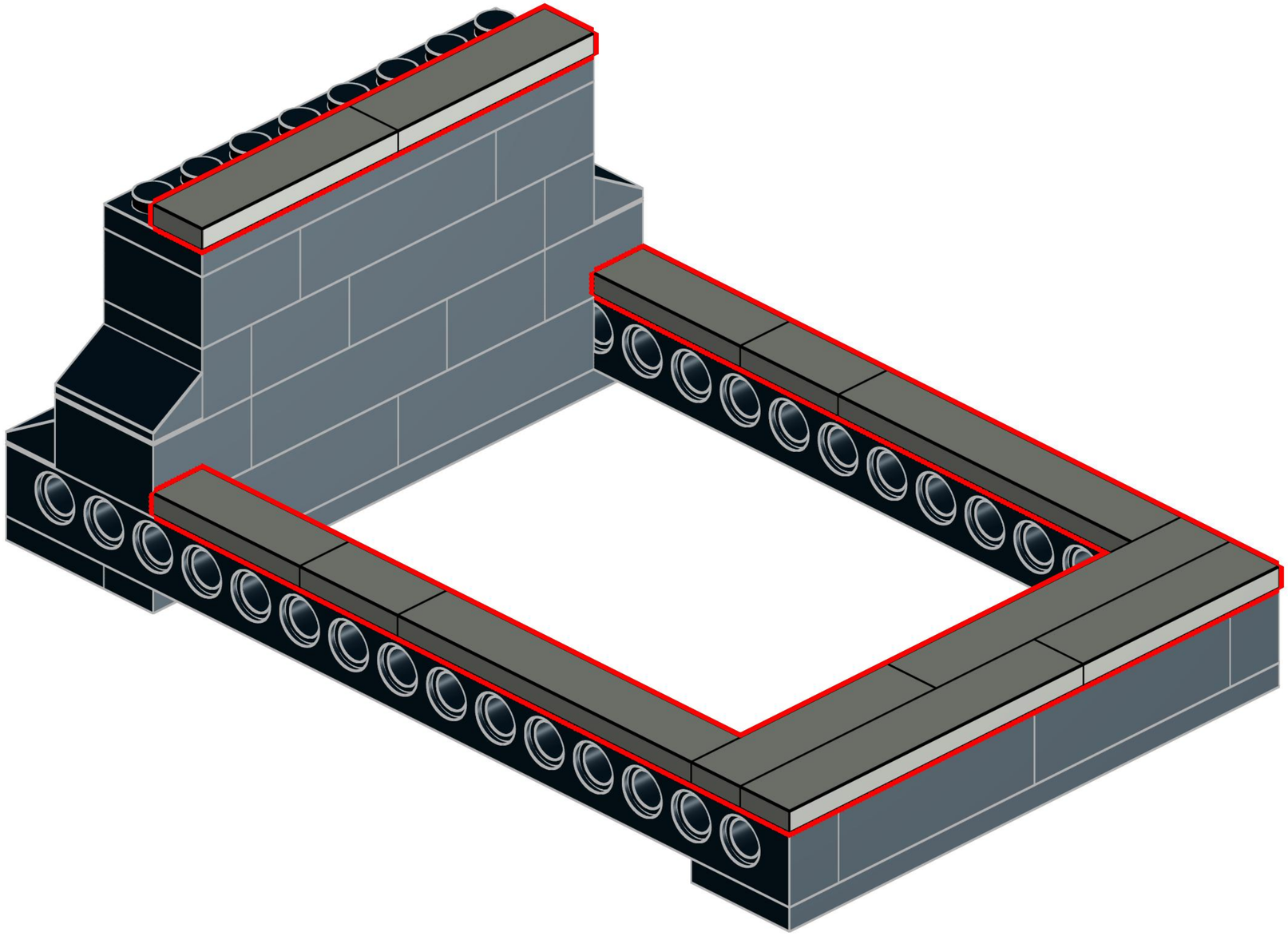

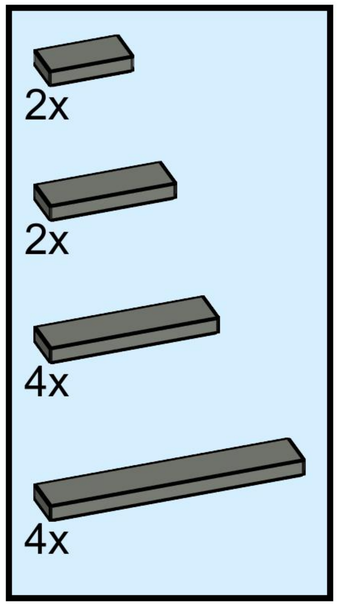

96

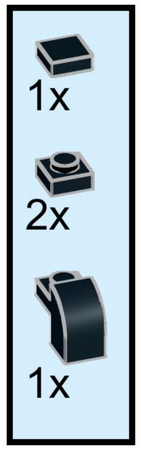

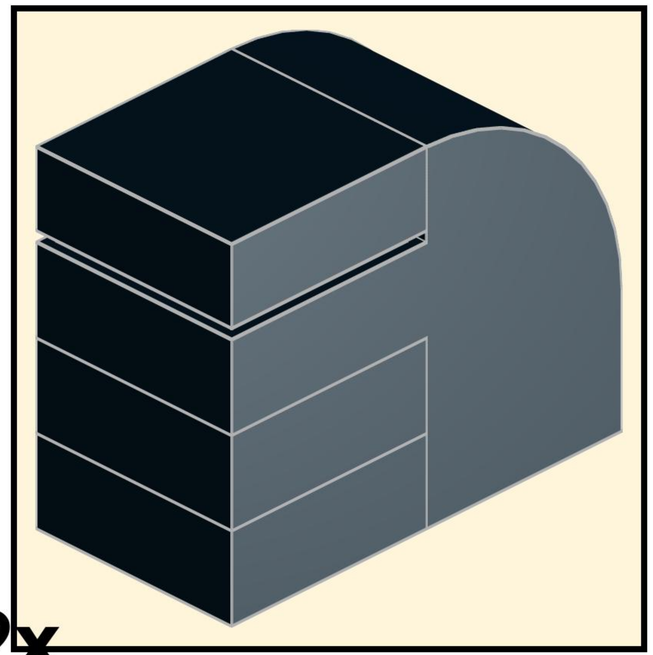

2x

97

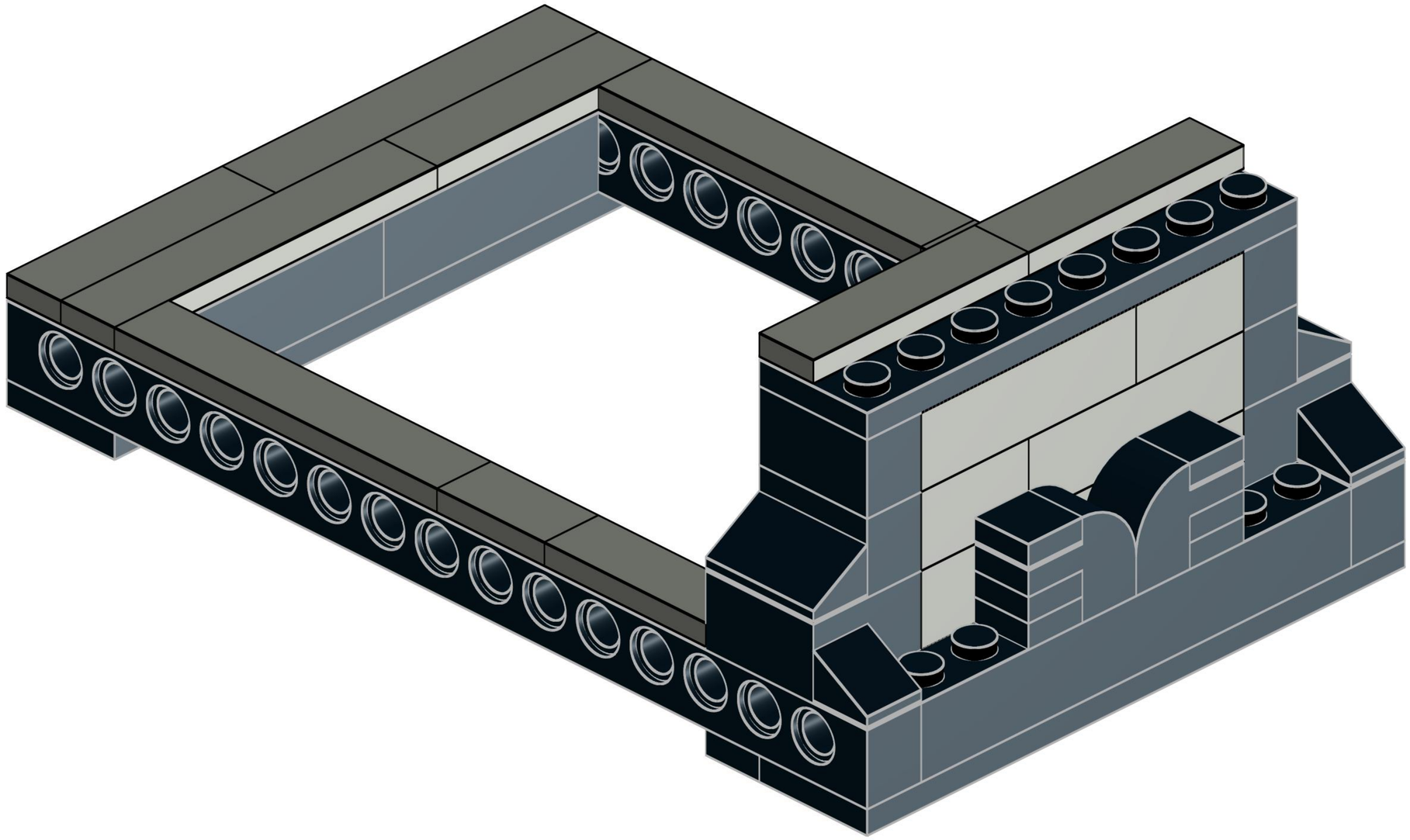

98

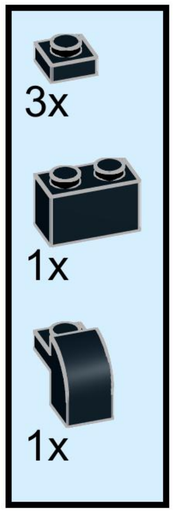

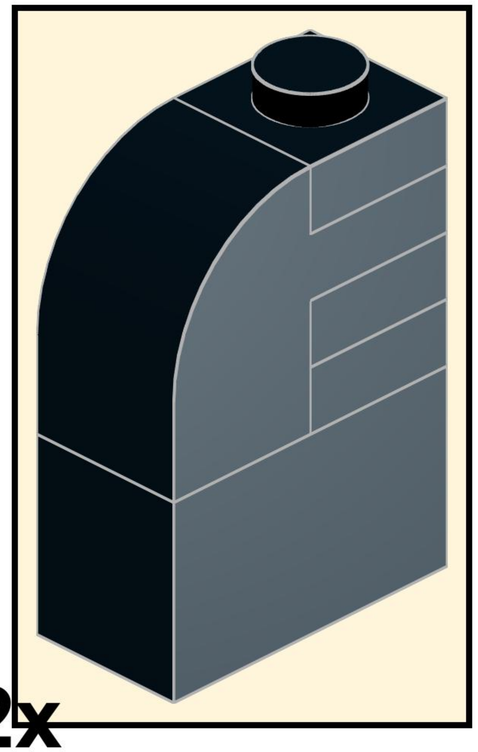

2x

99

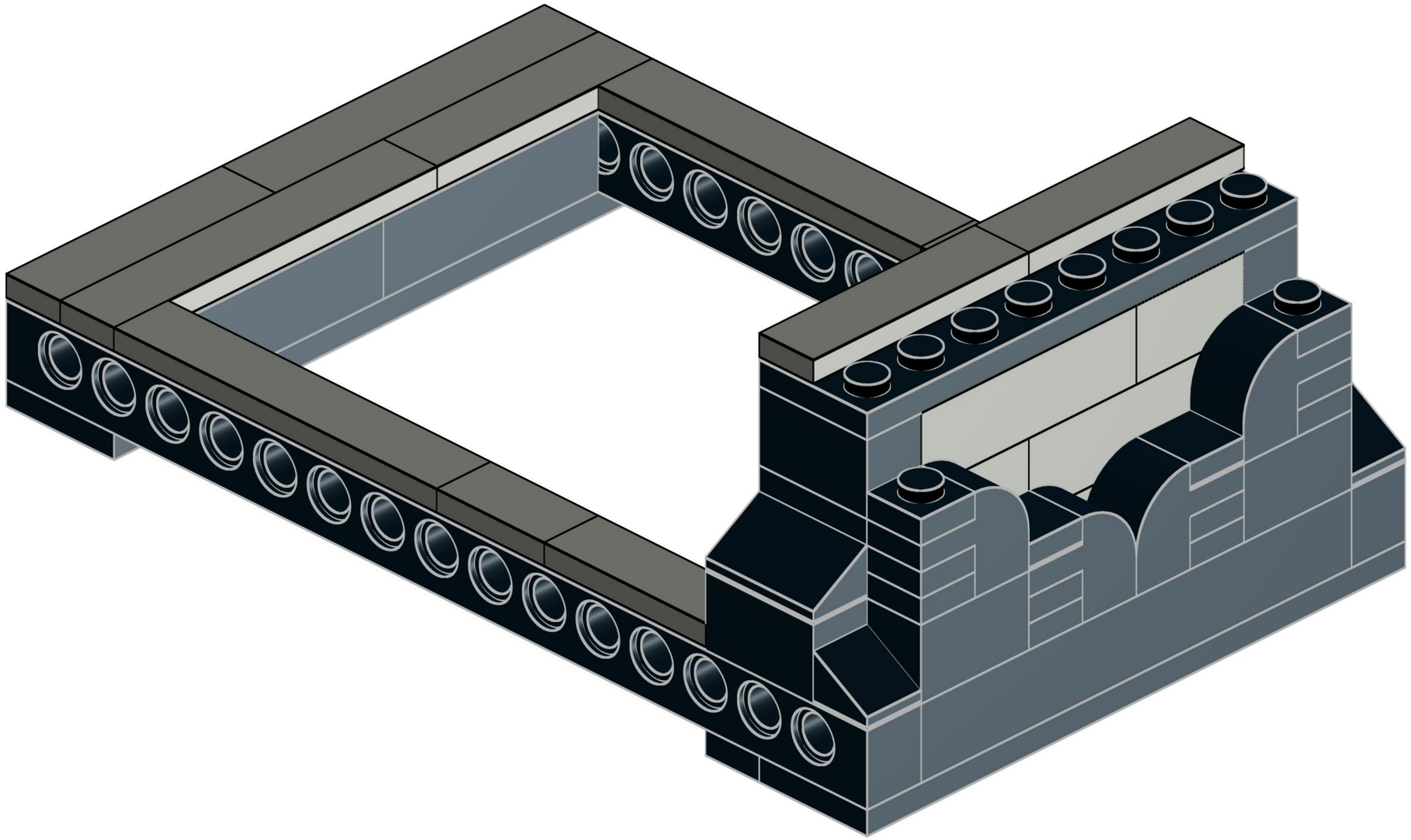

100

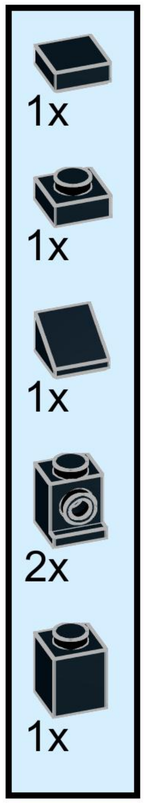

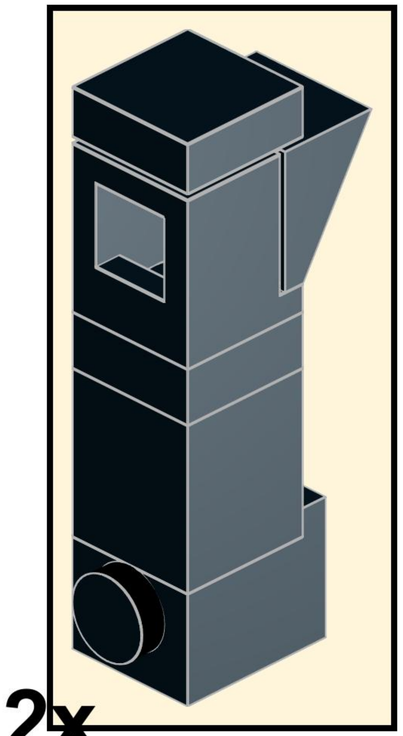

2x

101

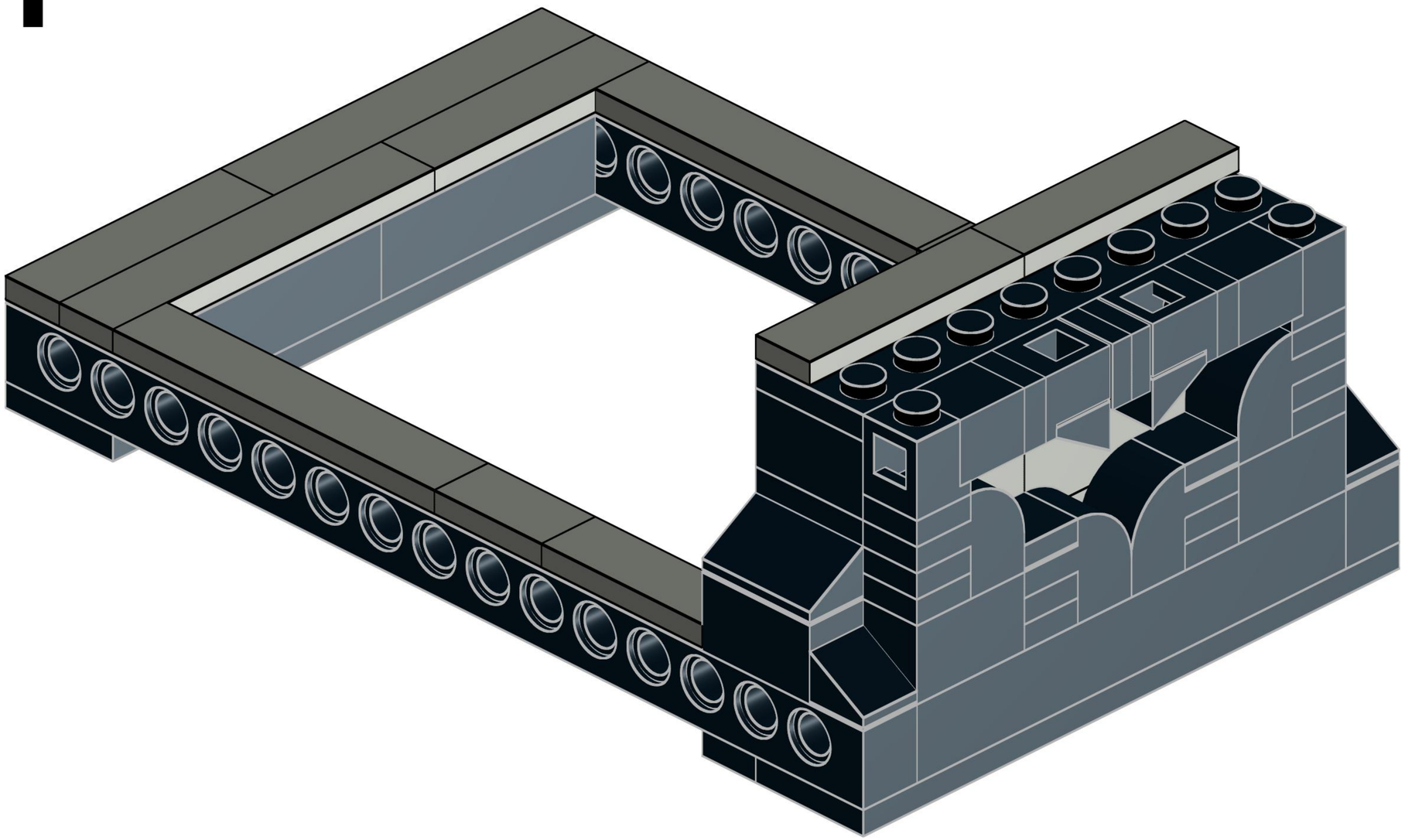

102

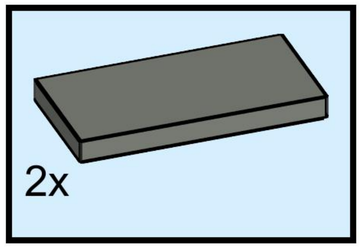

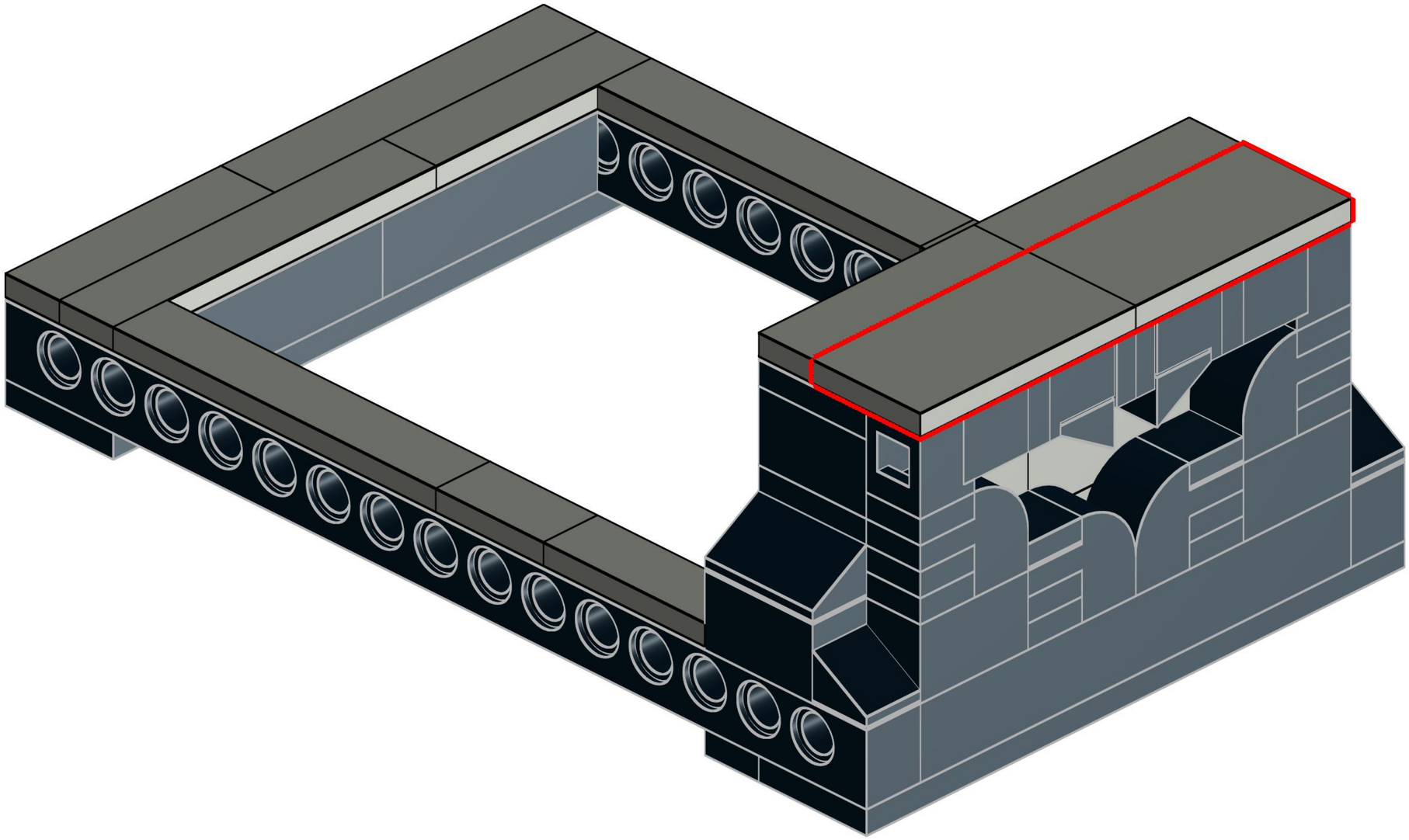

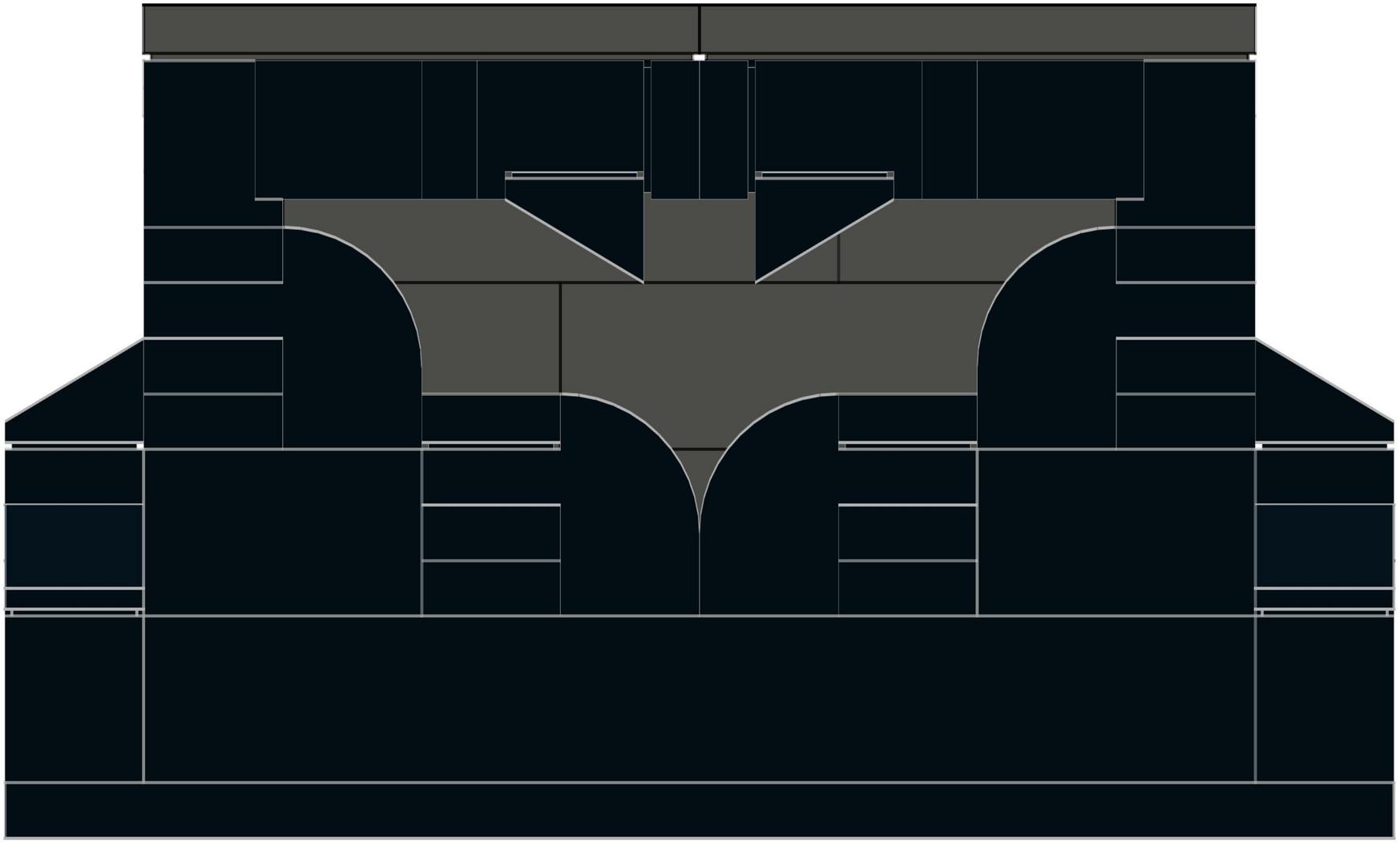

Na Na Na Na Na Na Na Na Na Na Na Na Na Na Na Na ... Batman

104

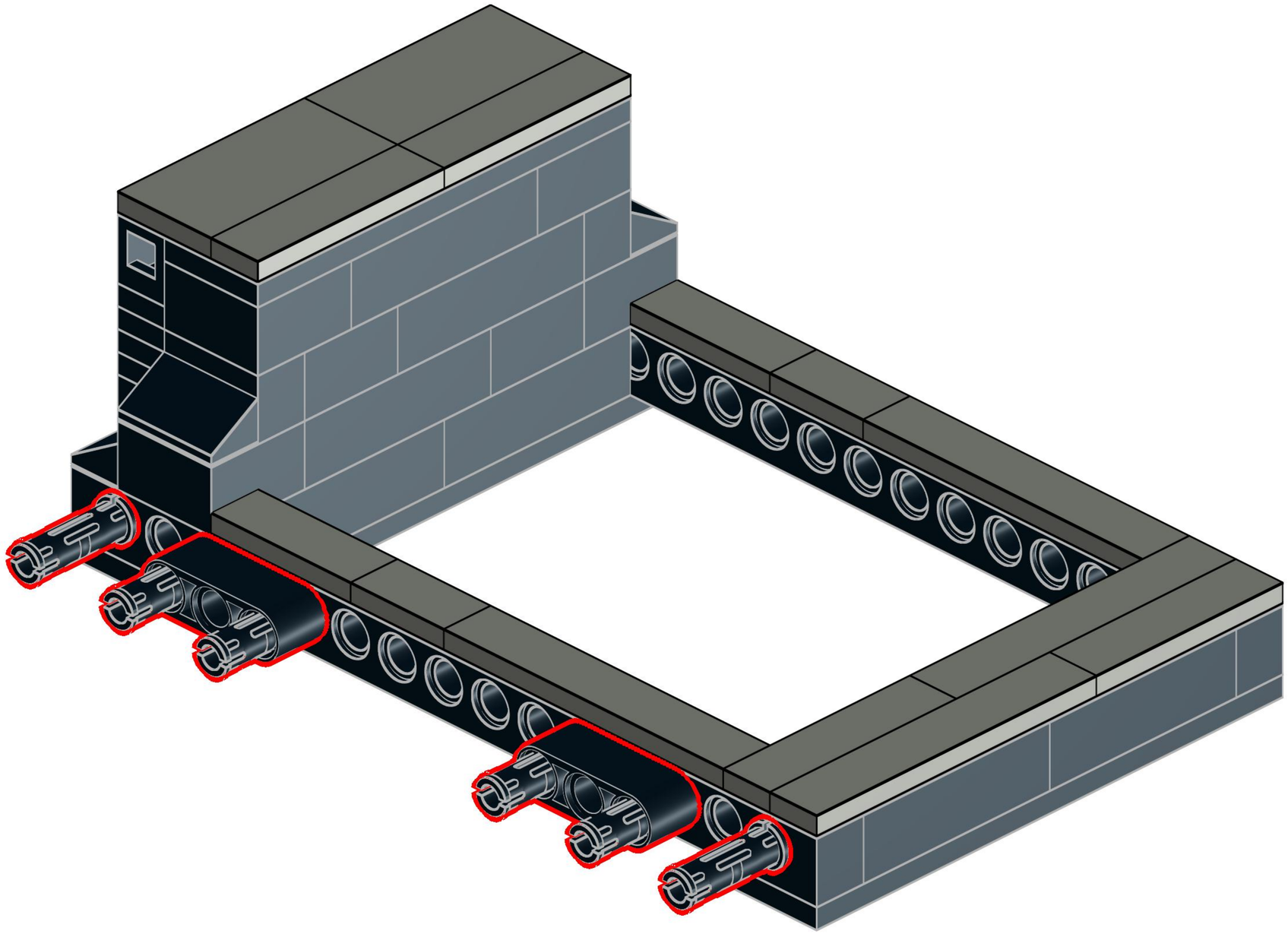

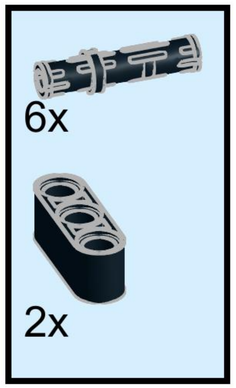

105

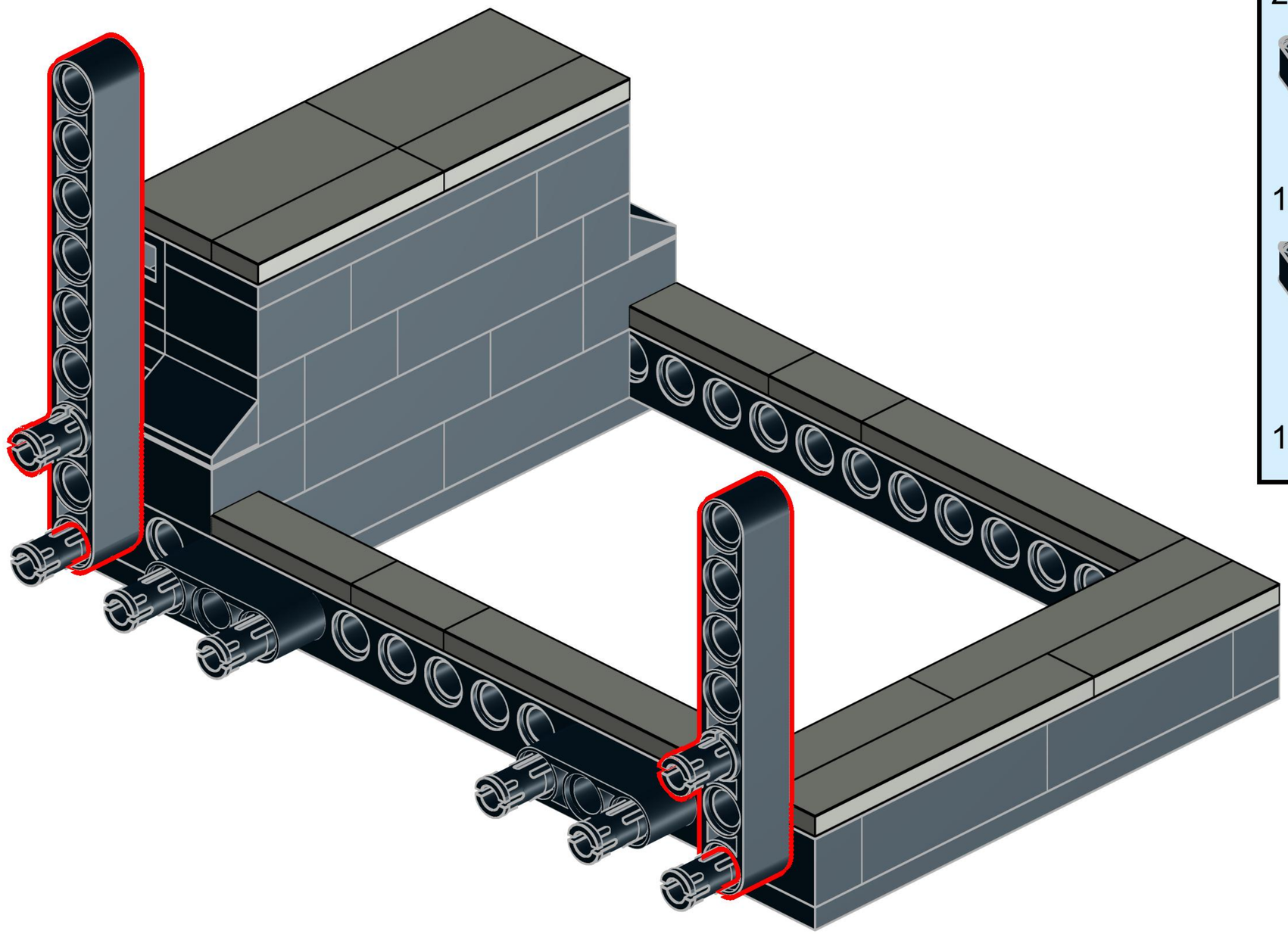

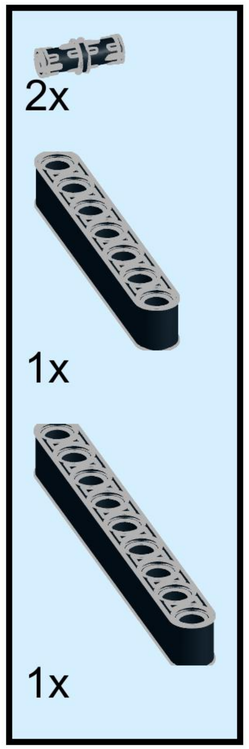

106

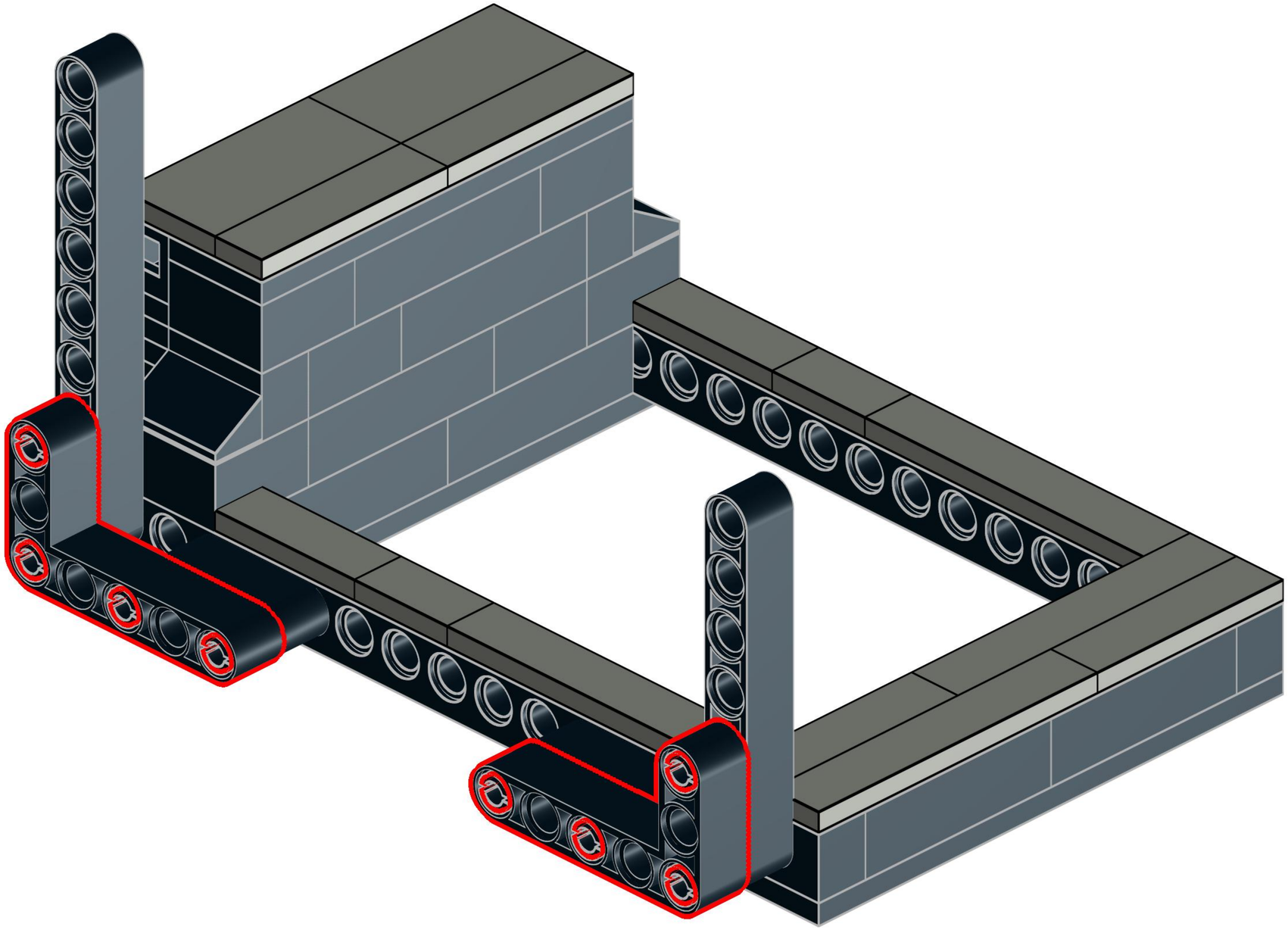

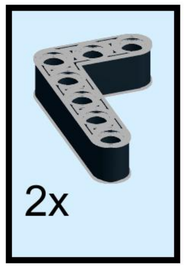

107

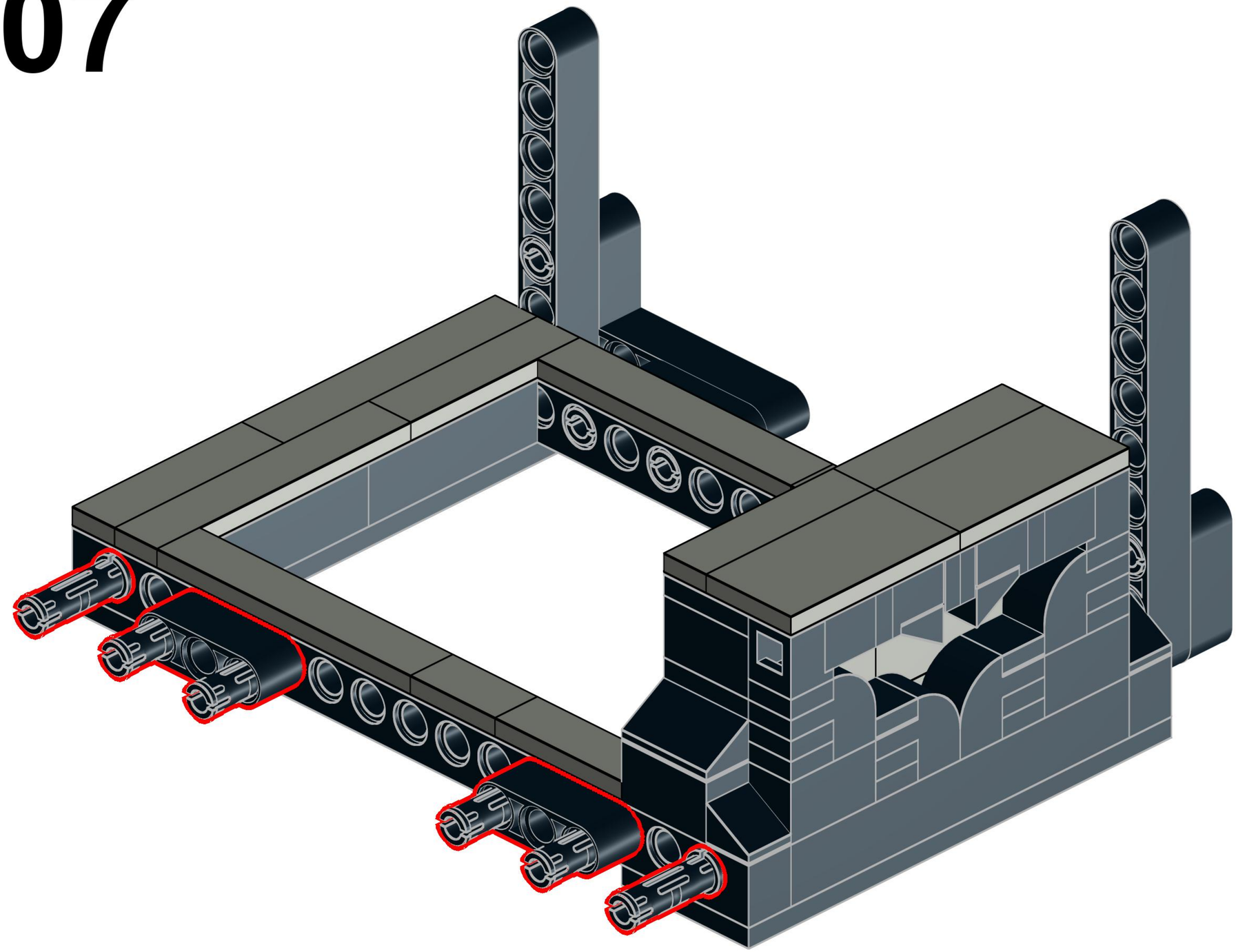

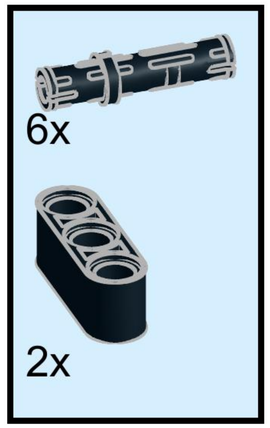

108

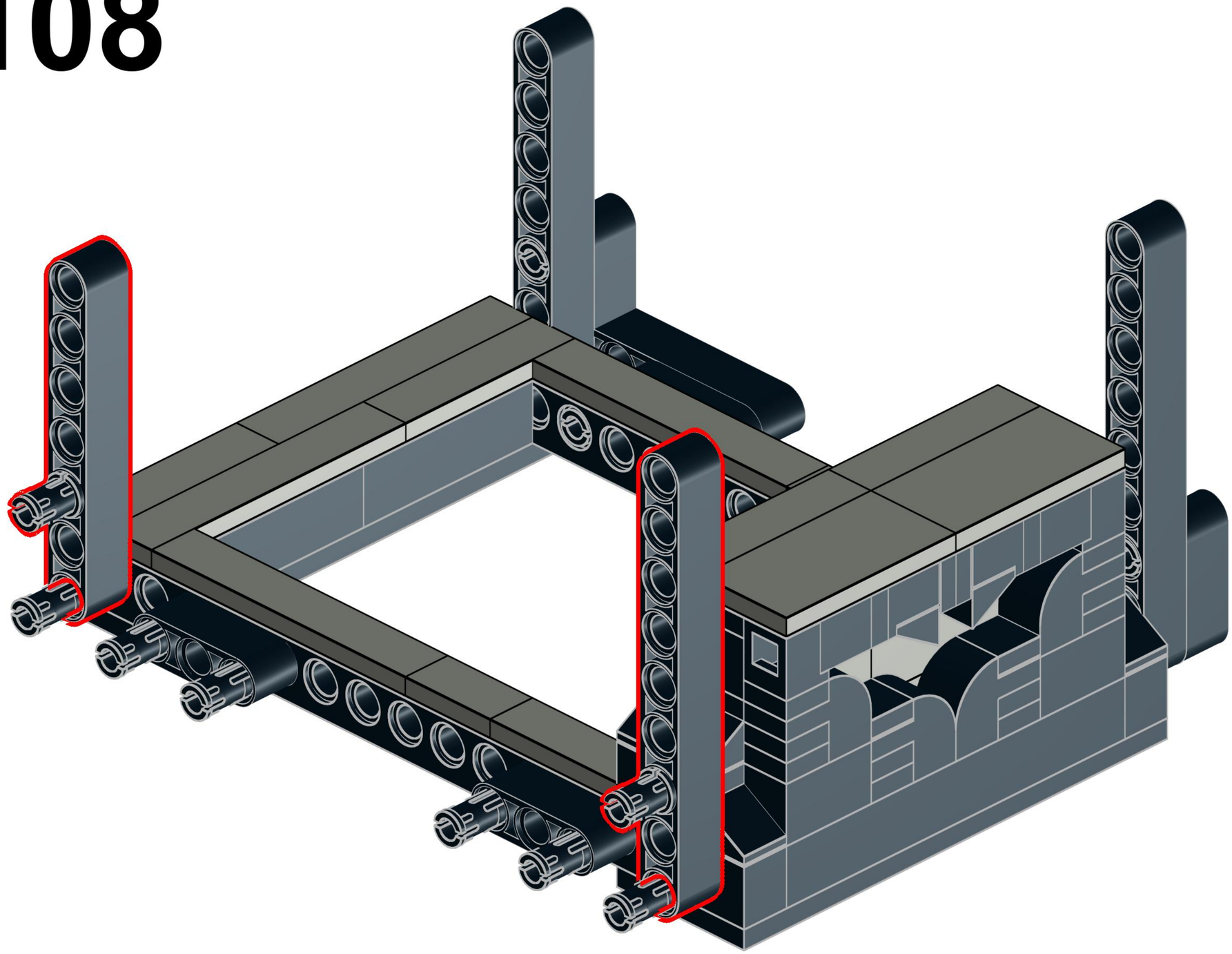

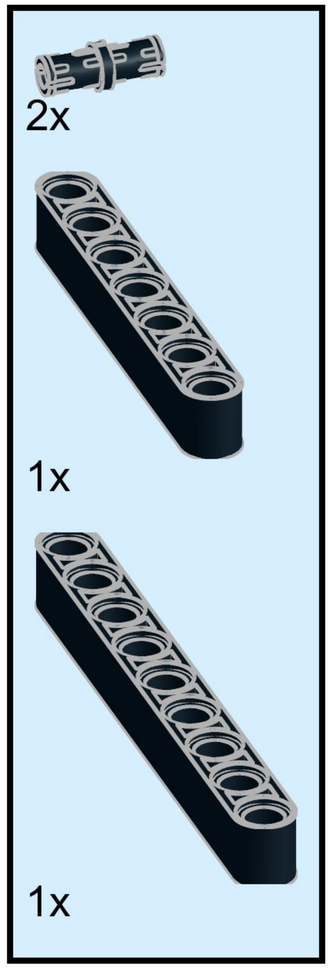

109

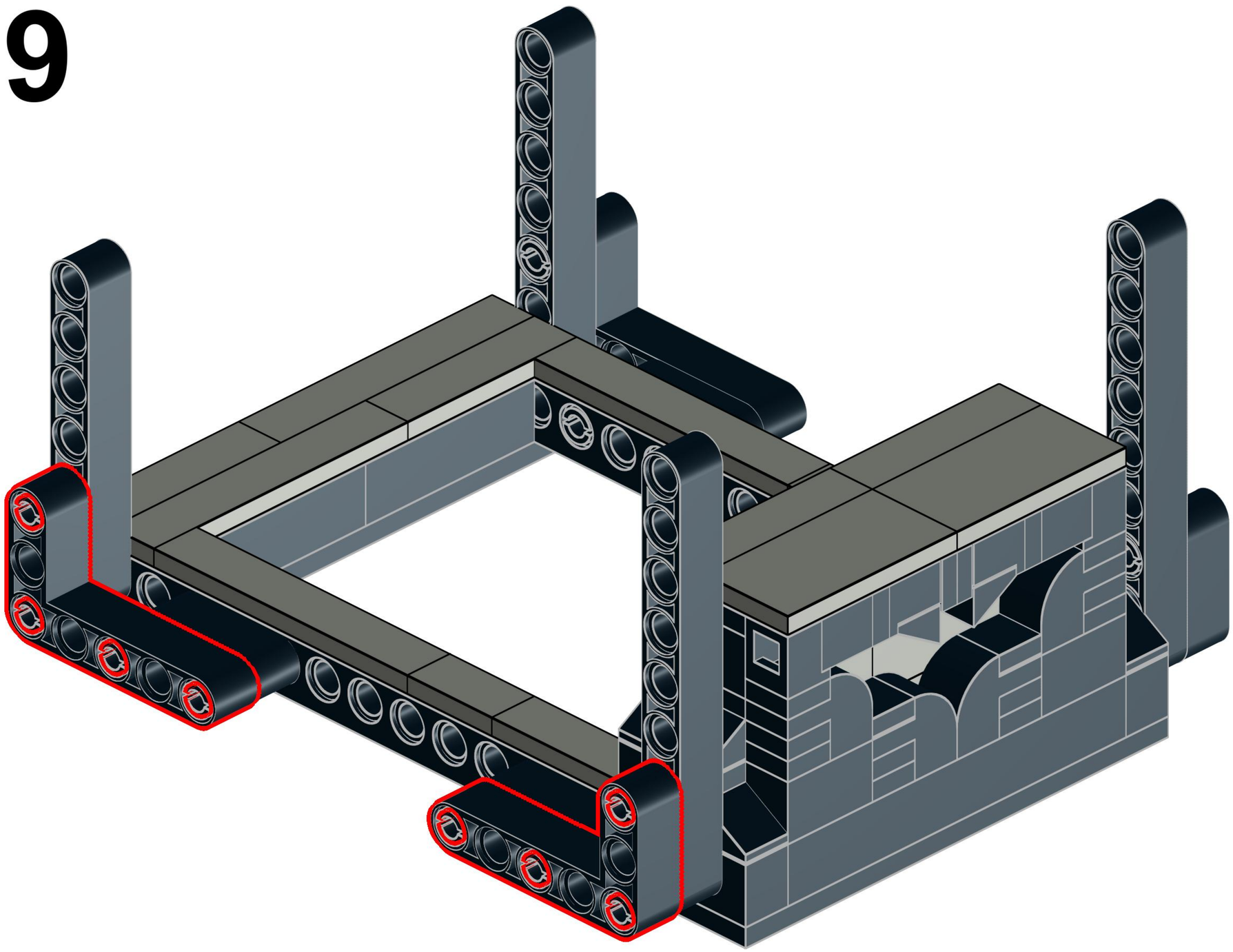

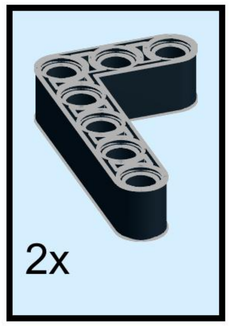

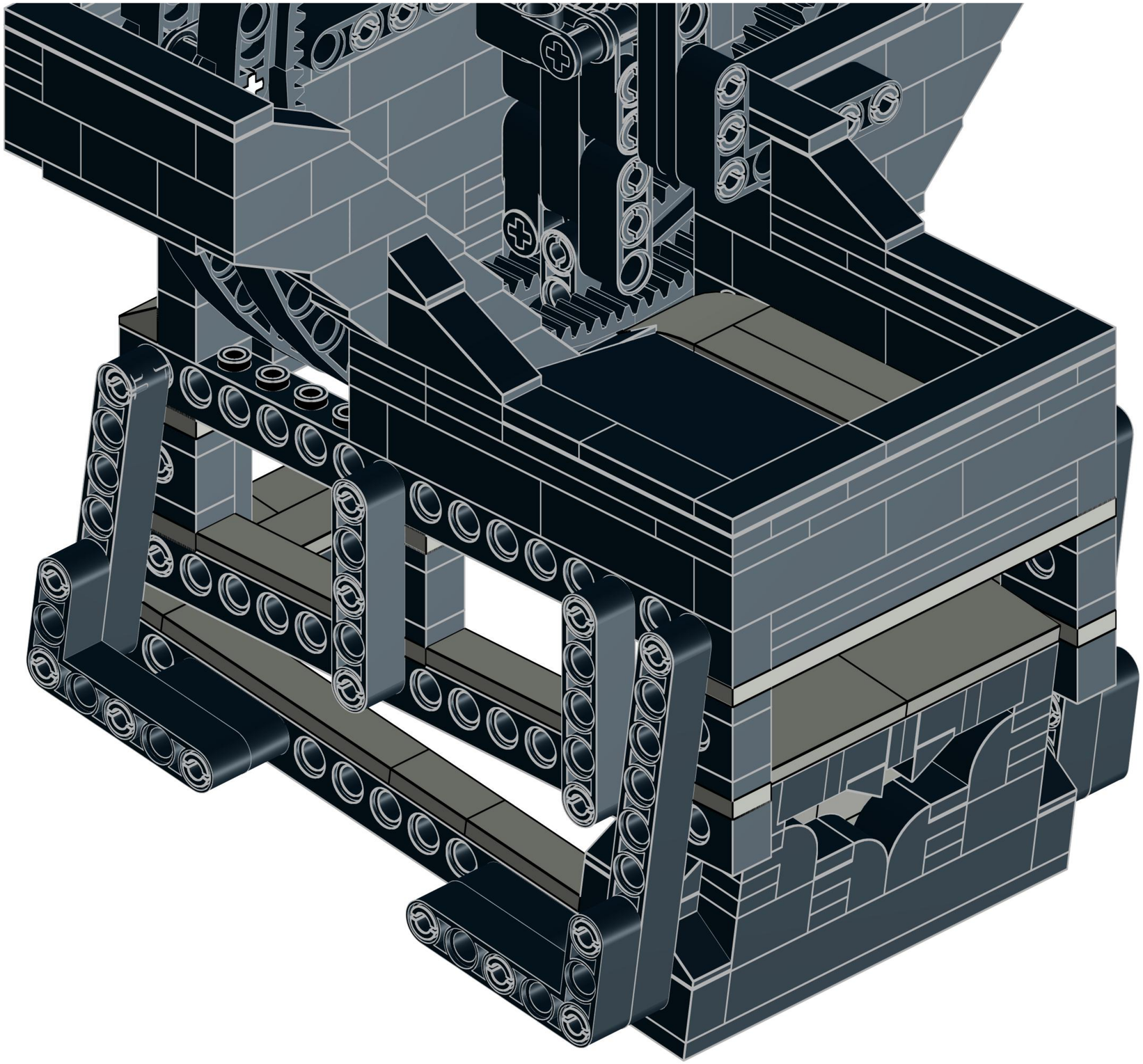

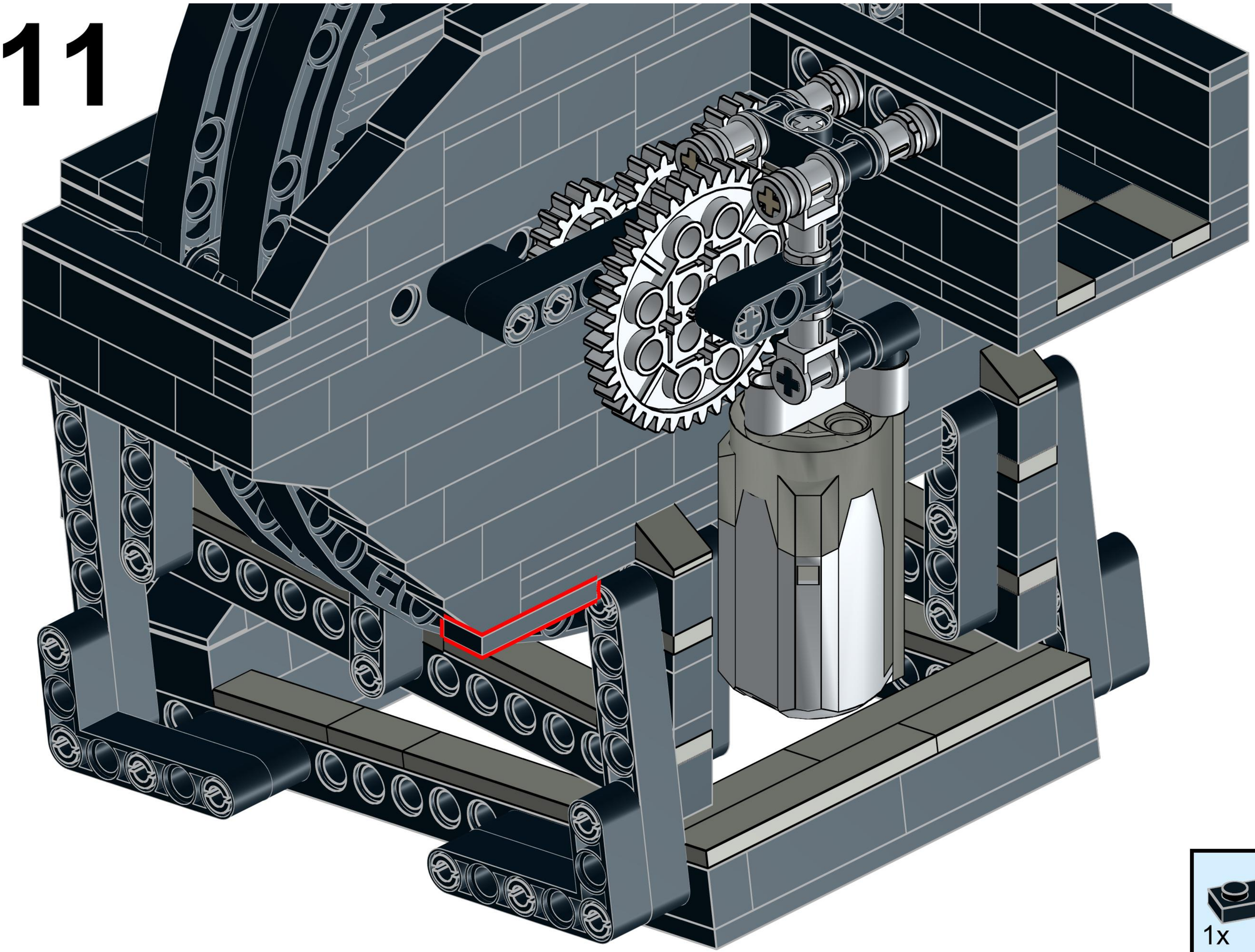

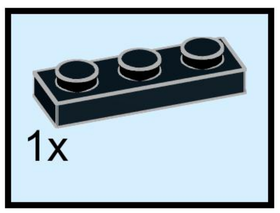
1x

112

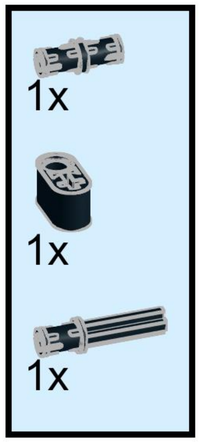

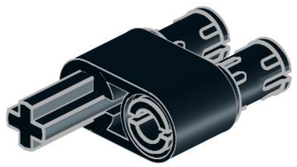

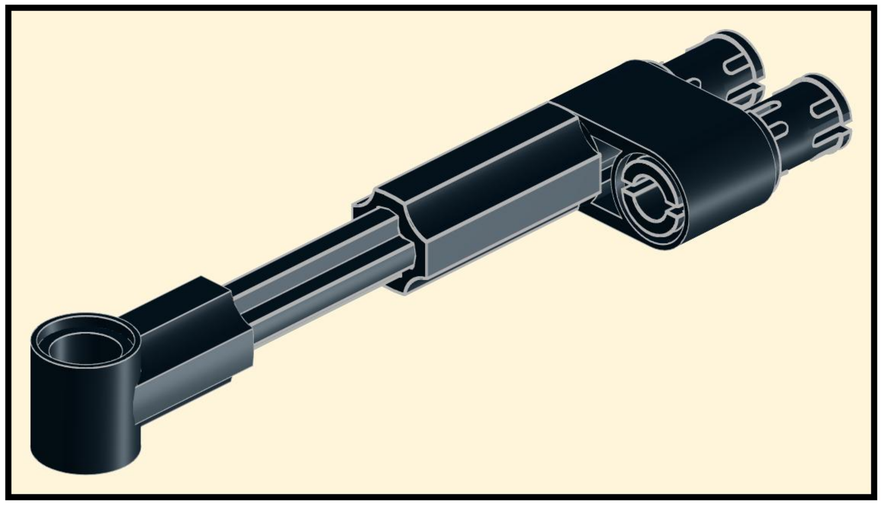

113

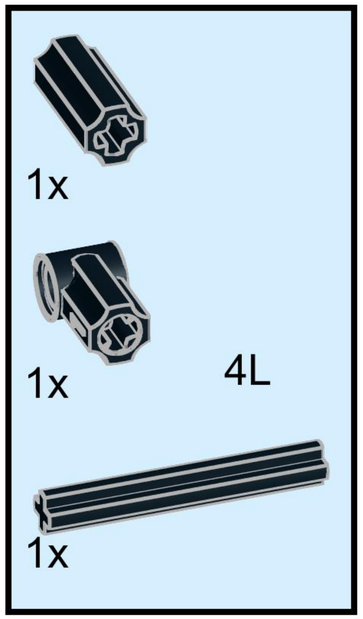

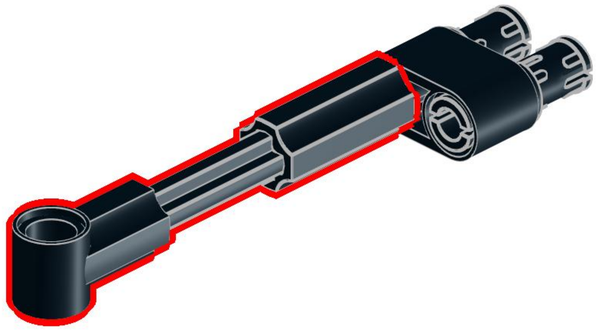

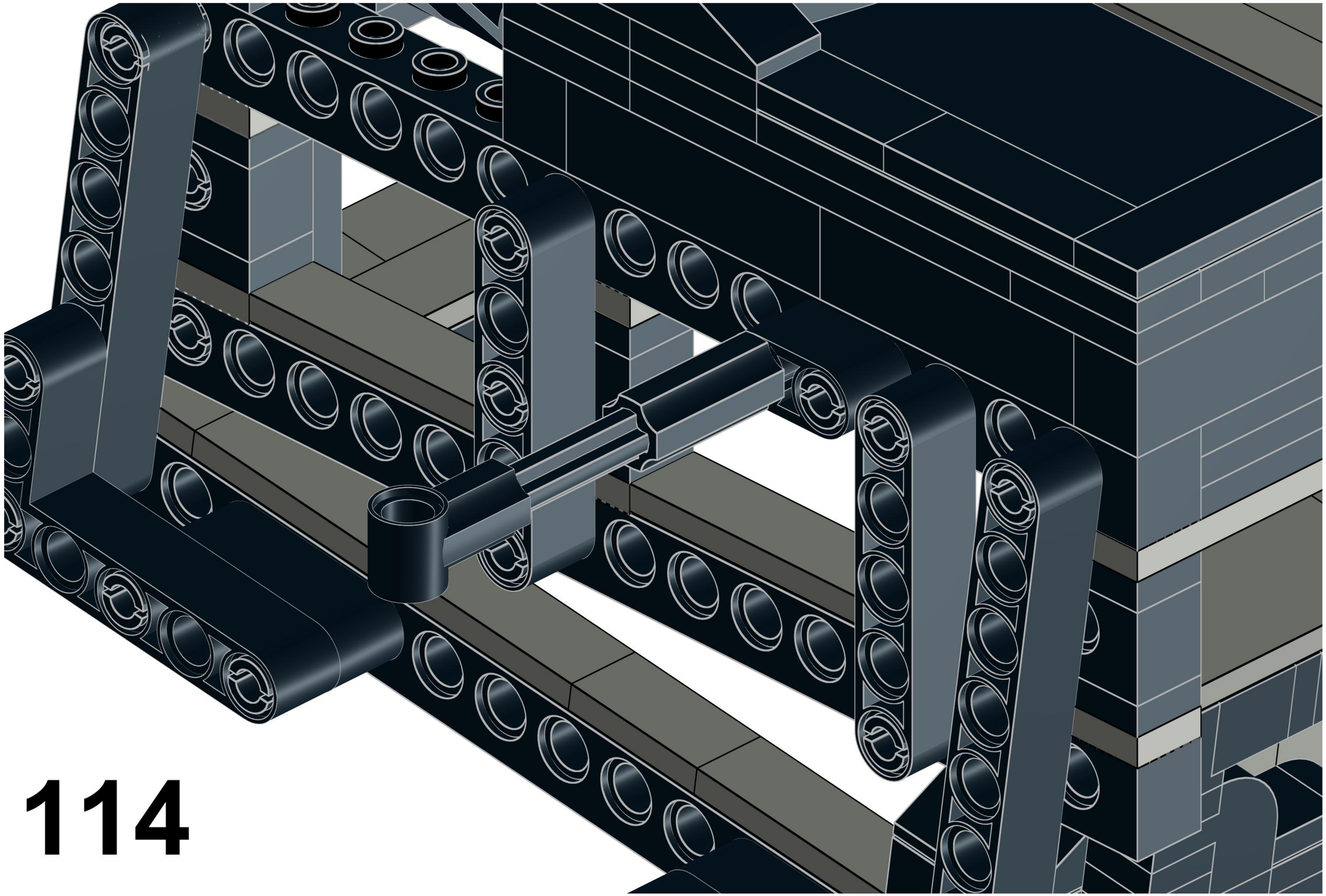

115

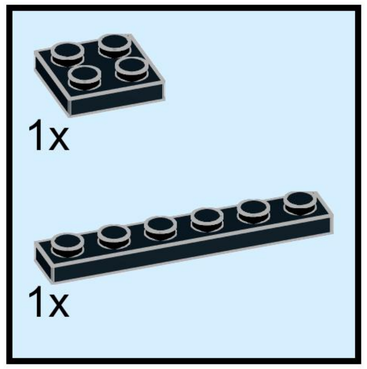

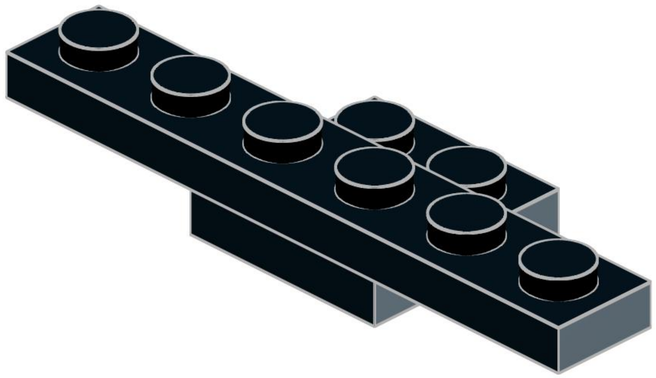

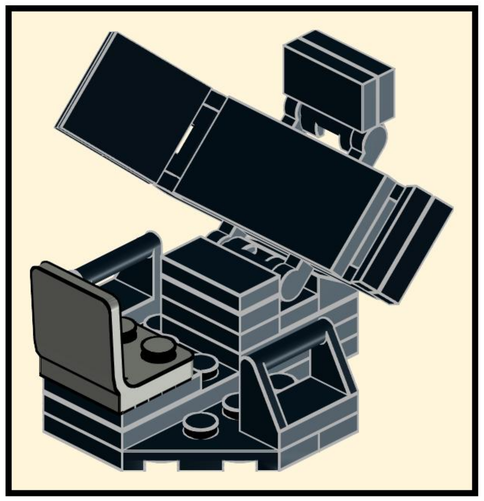

116

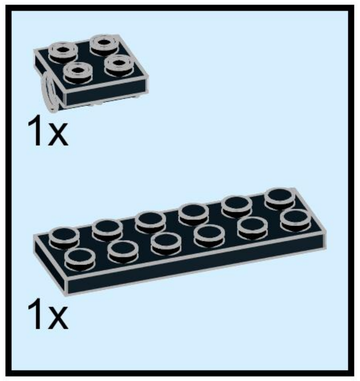

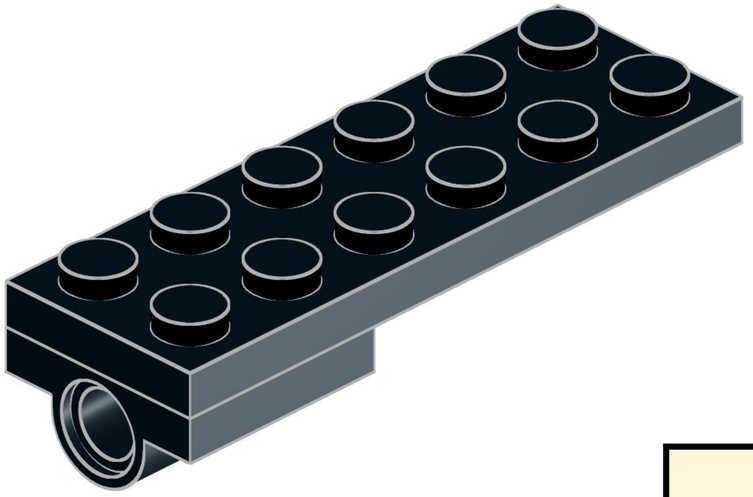

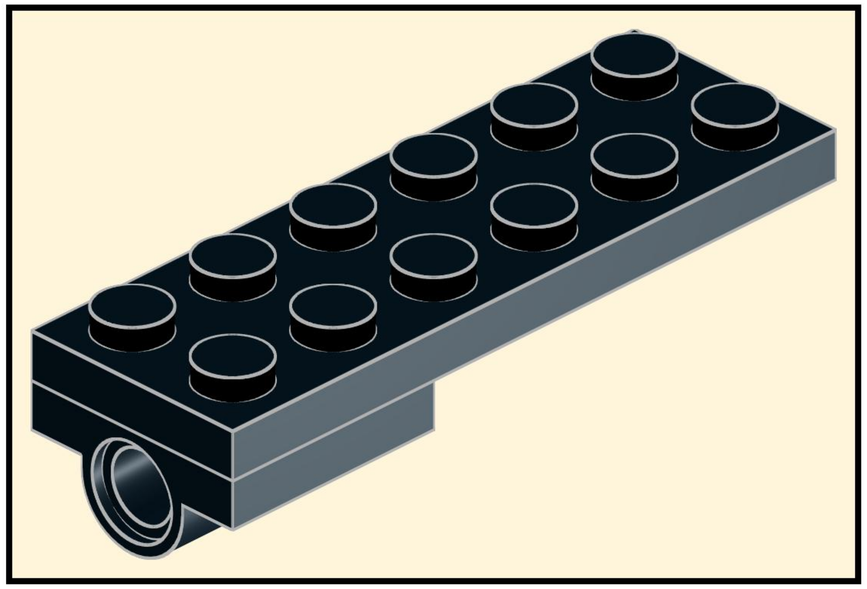

117

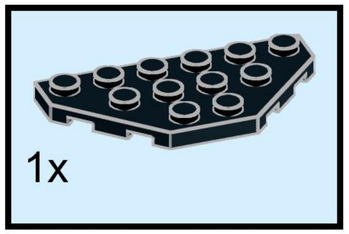

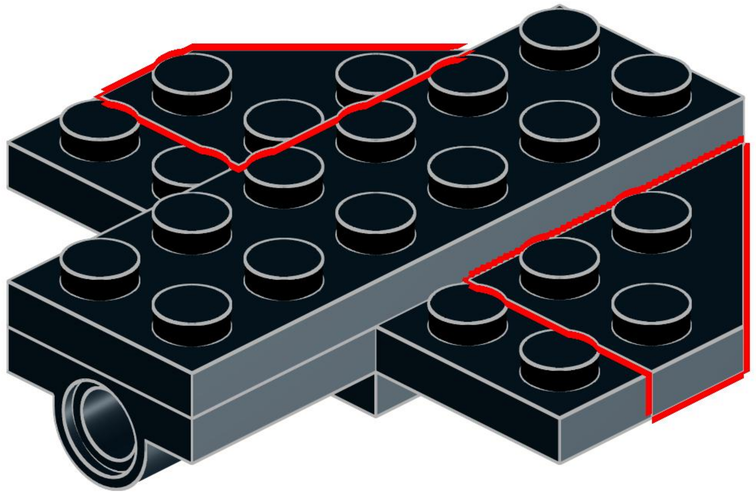

118

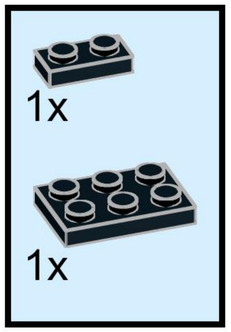

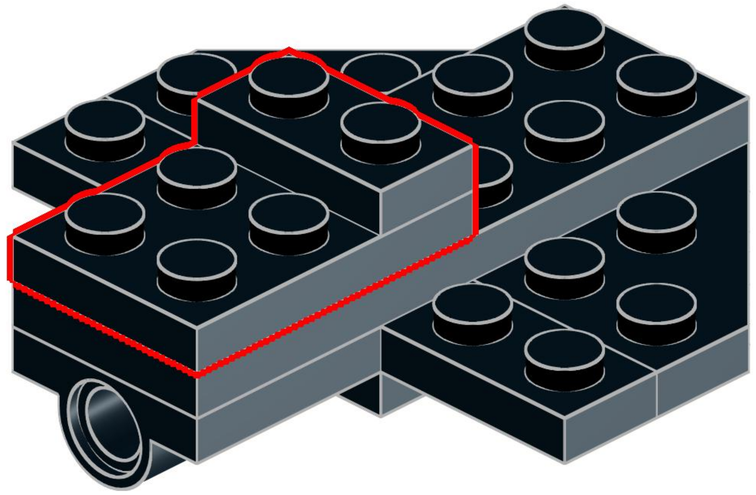

119

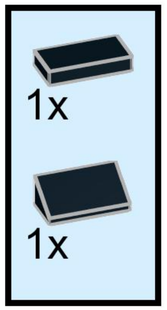

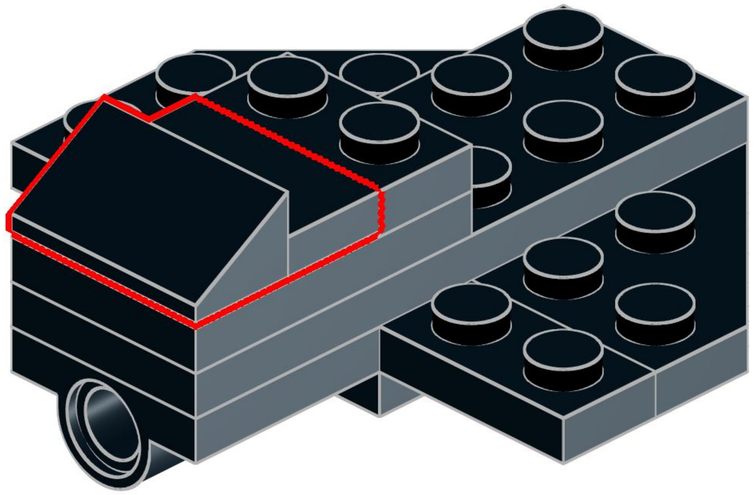

120

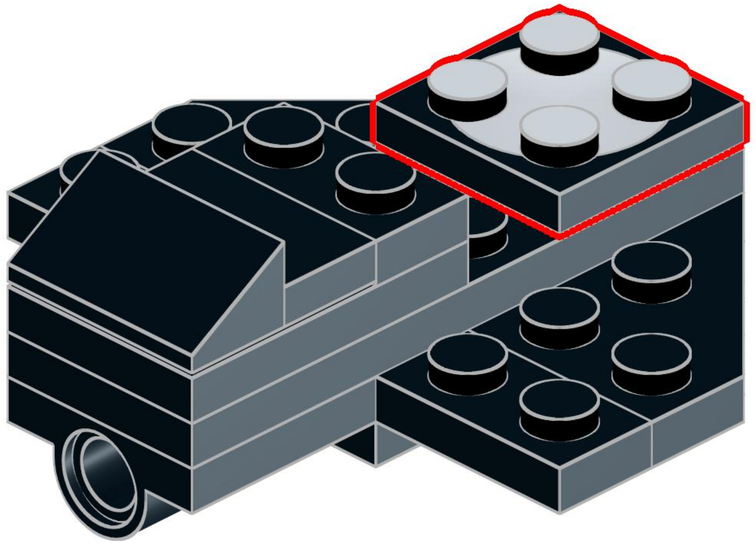

121

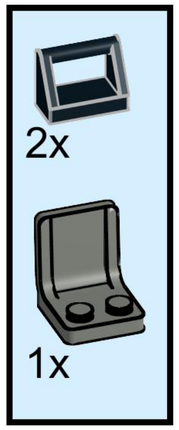

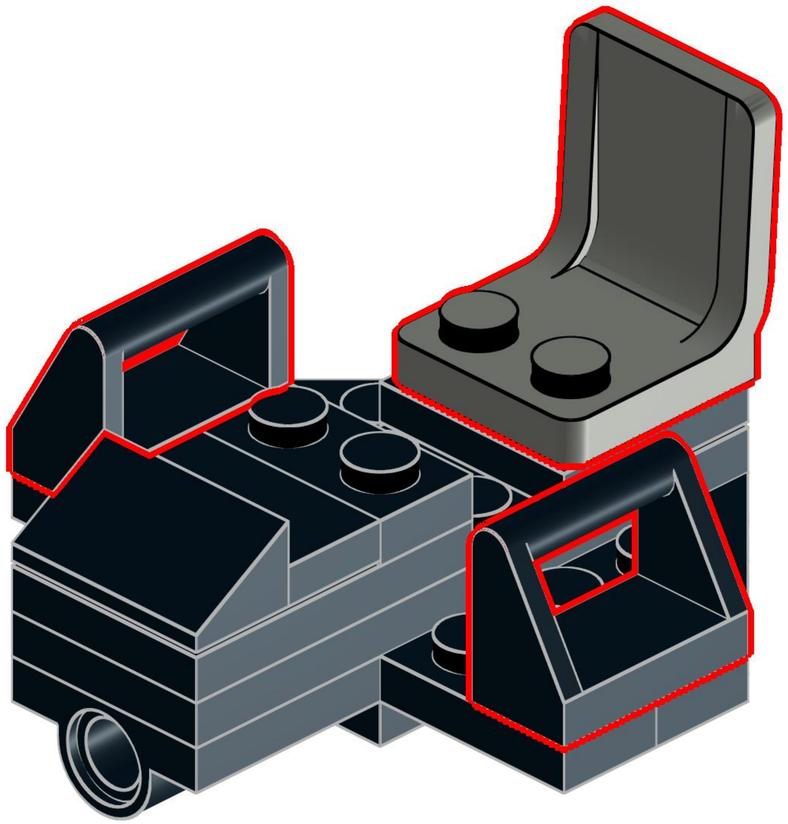

122

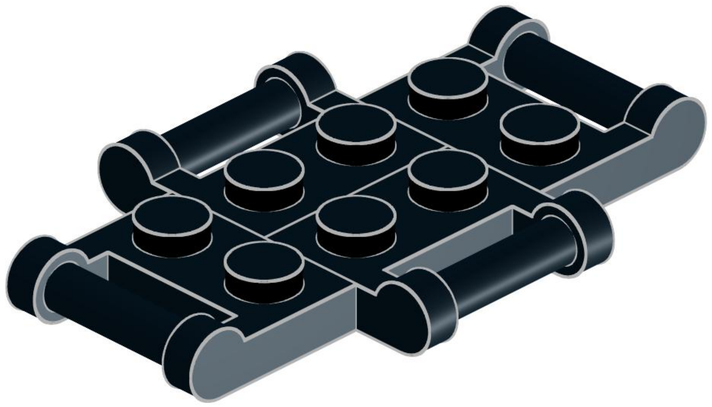

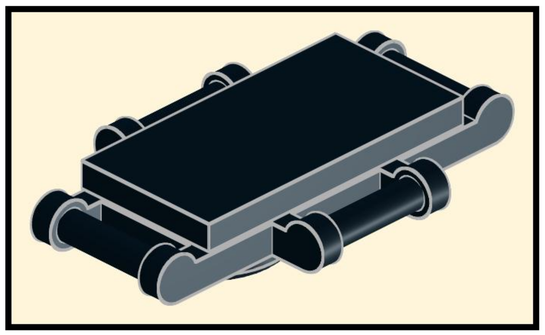

123

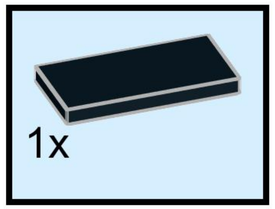

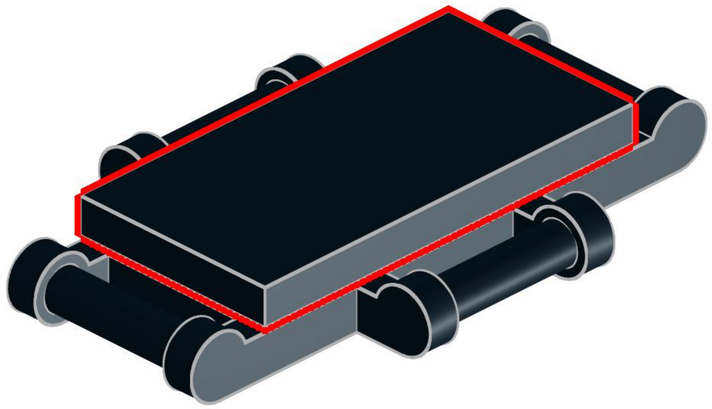

124

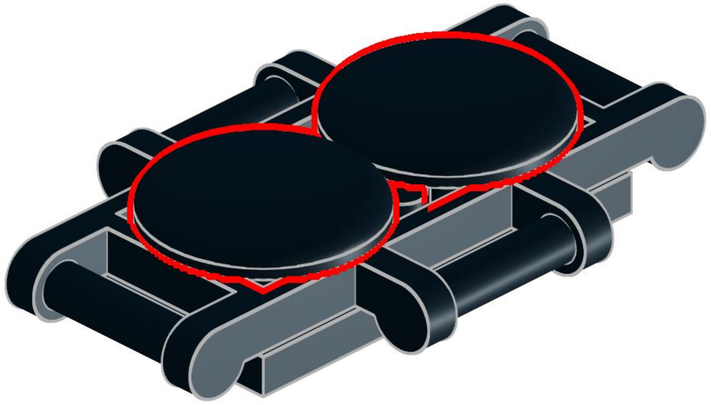

125

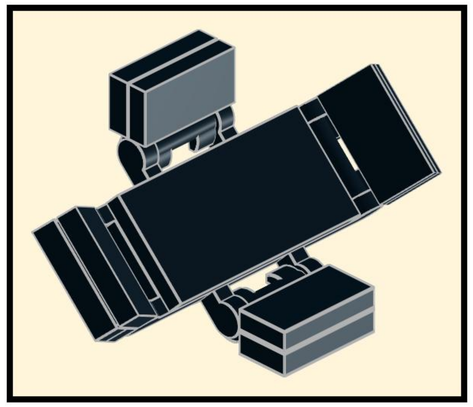

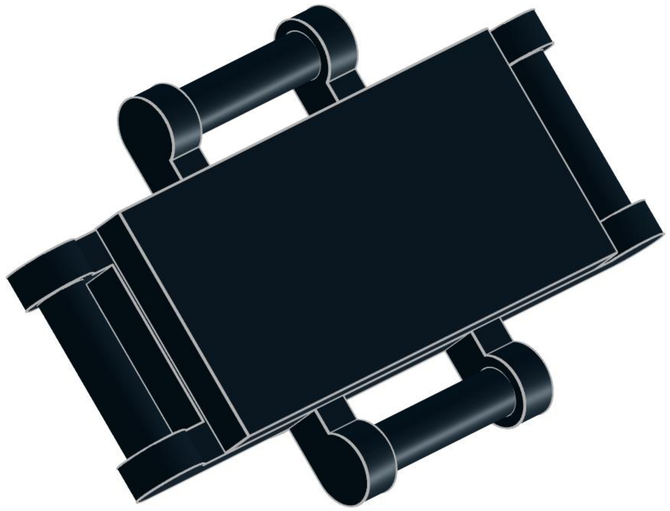

126

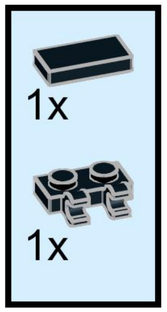

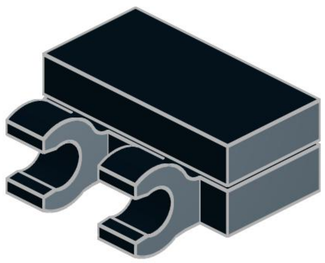

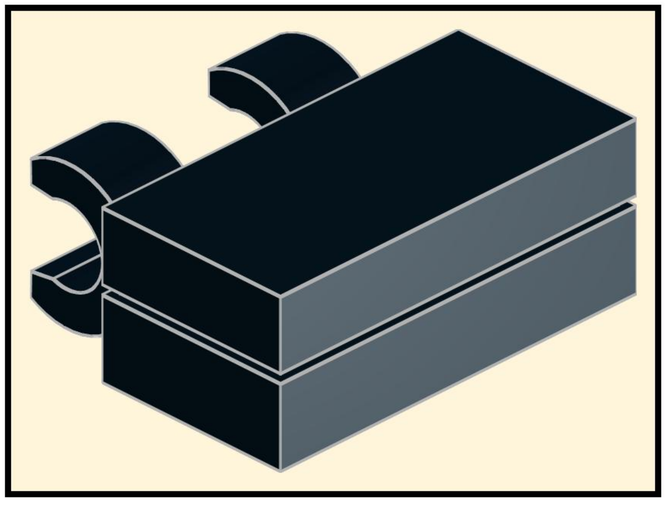

127

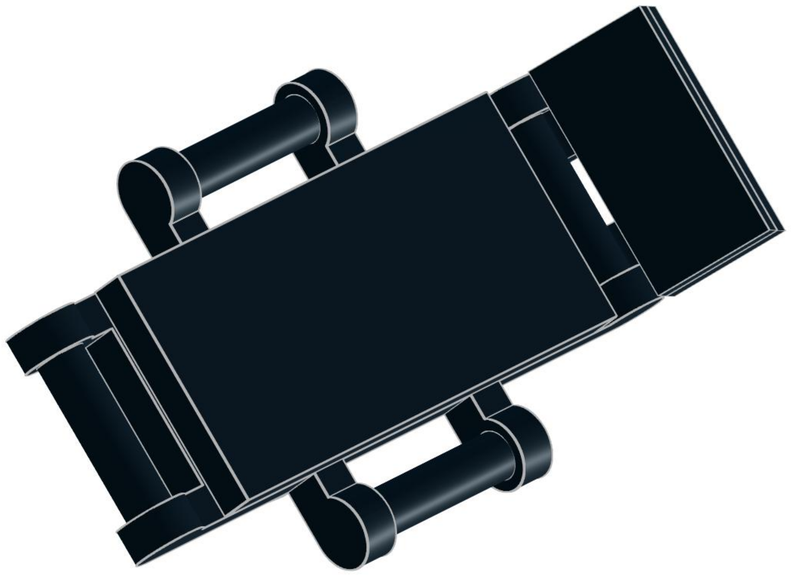

128

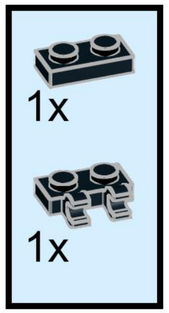

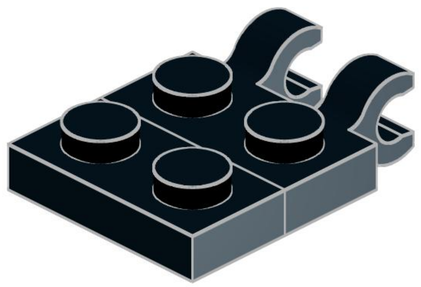

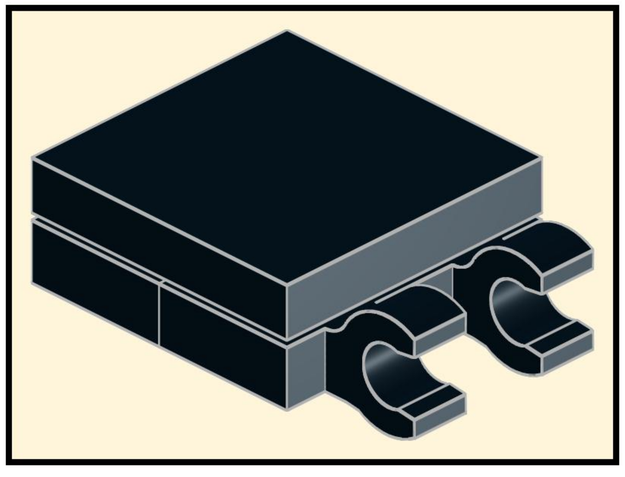

129

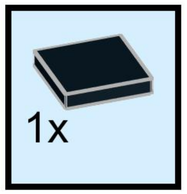

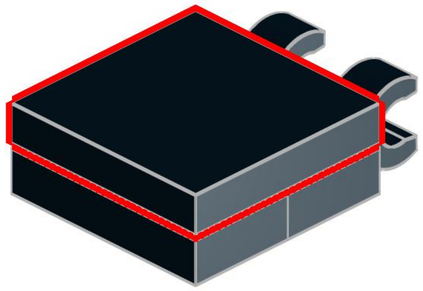

130

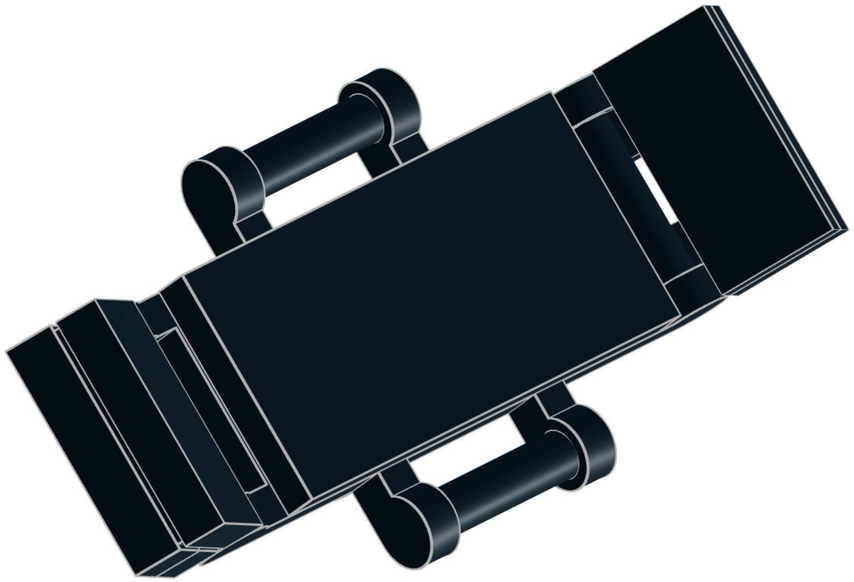

131

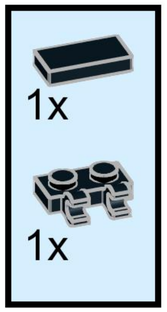

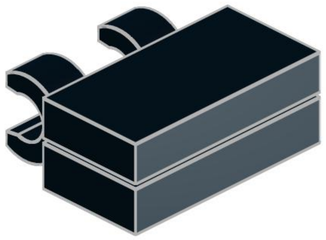

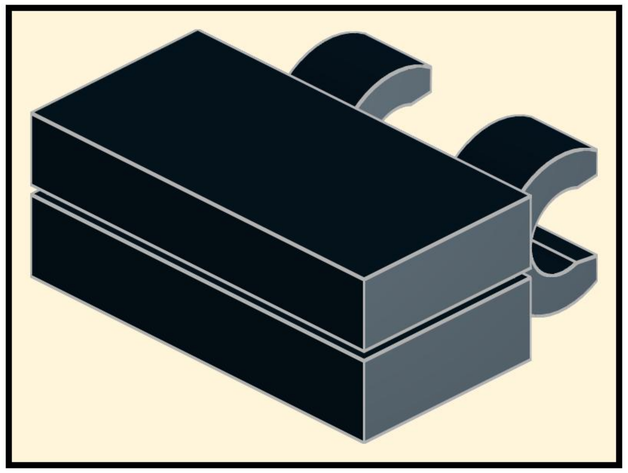

132

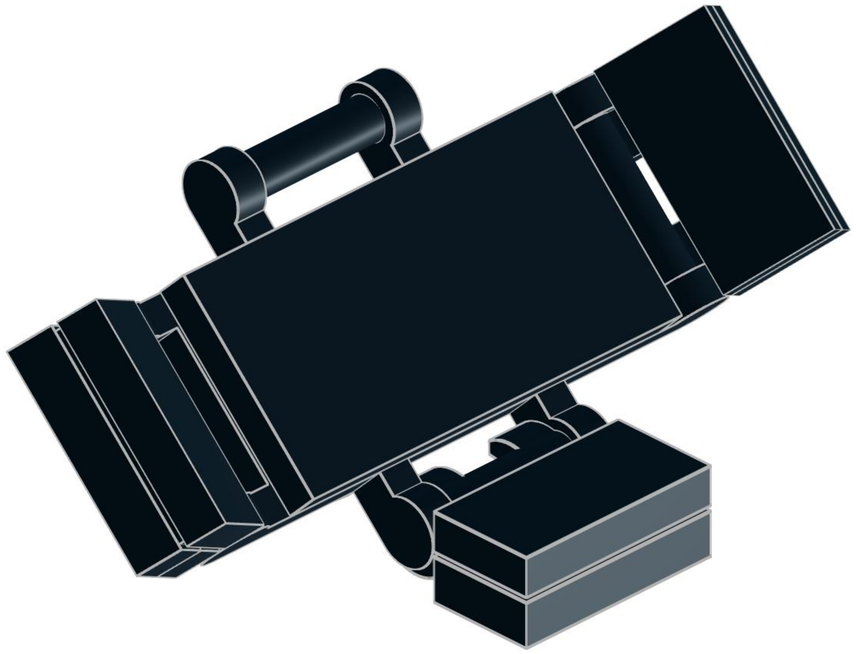

133

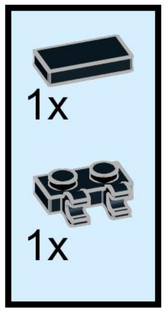

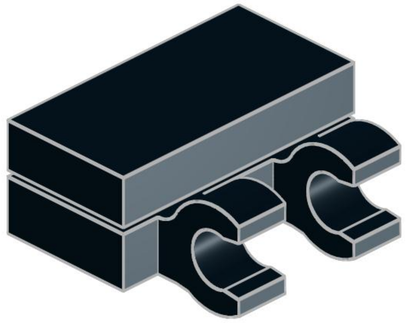

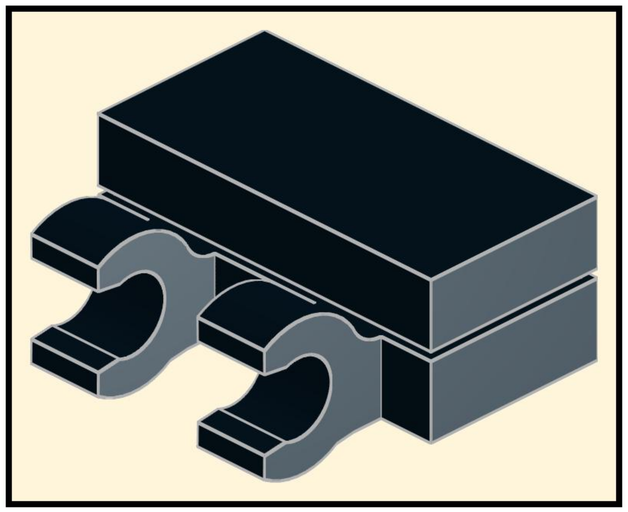

134

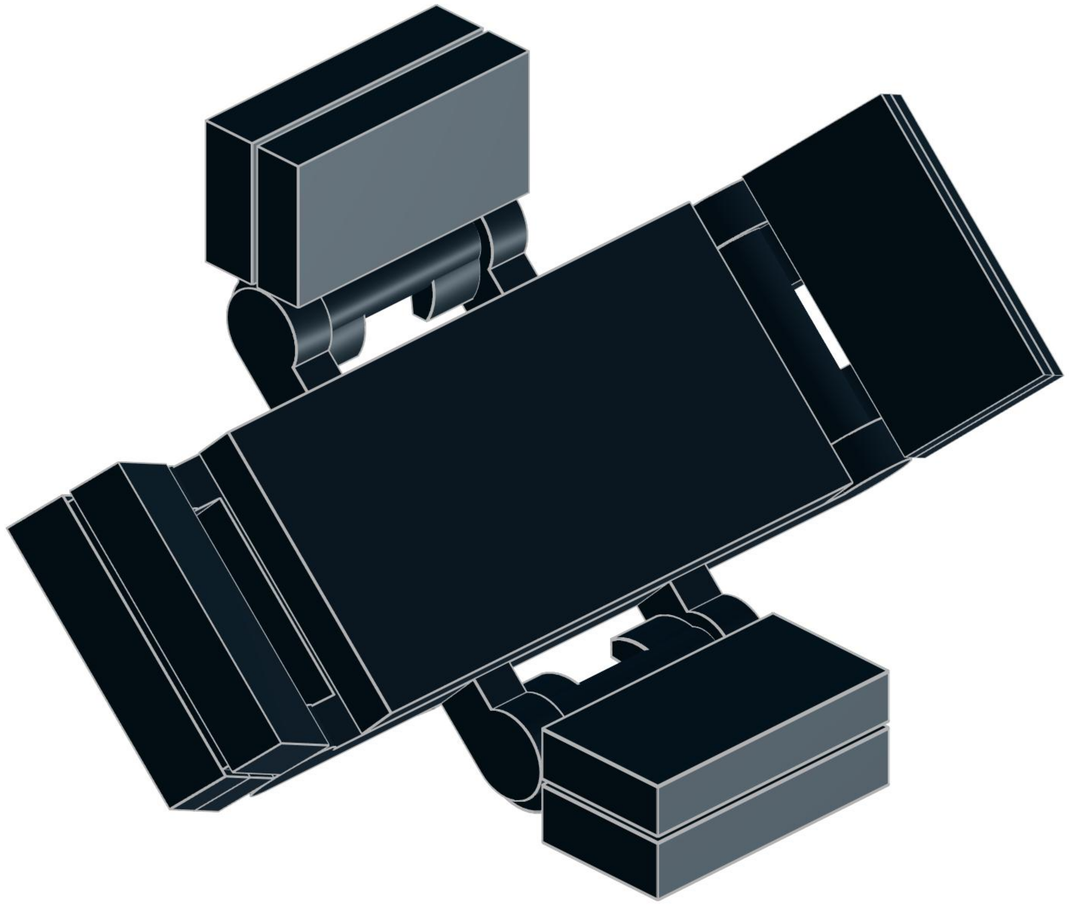

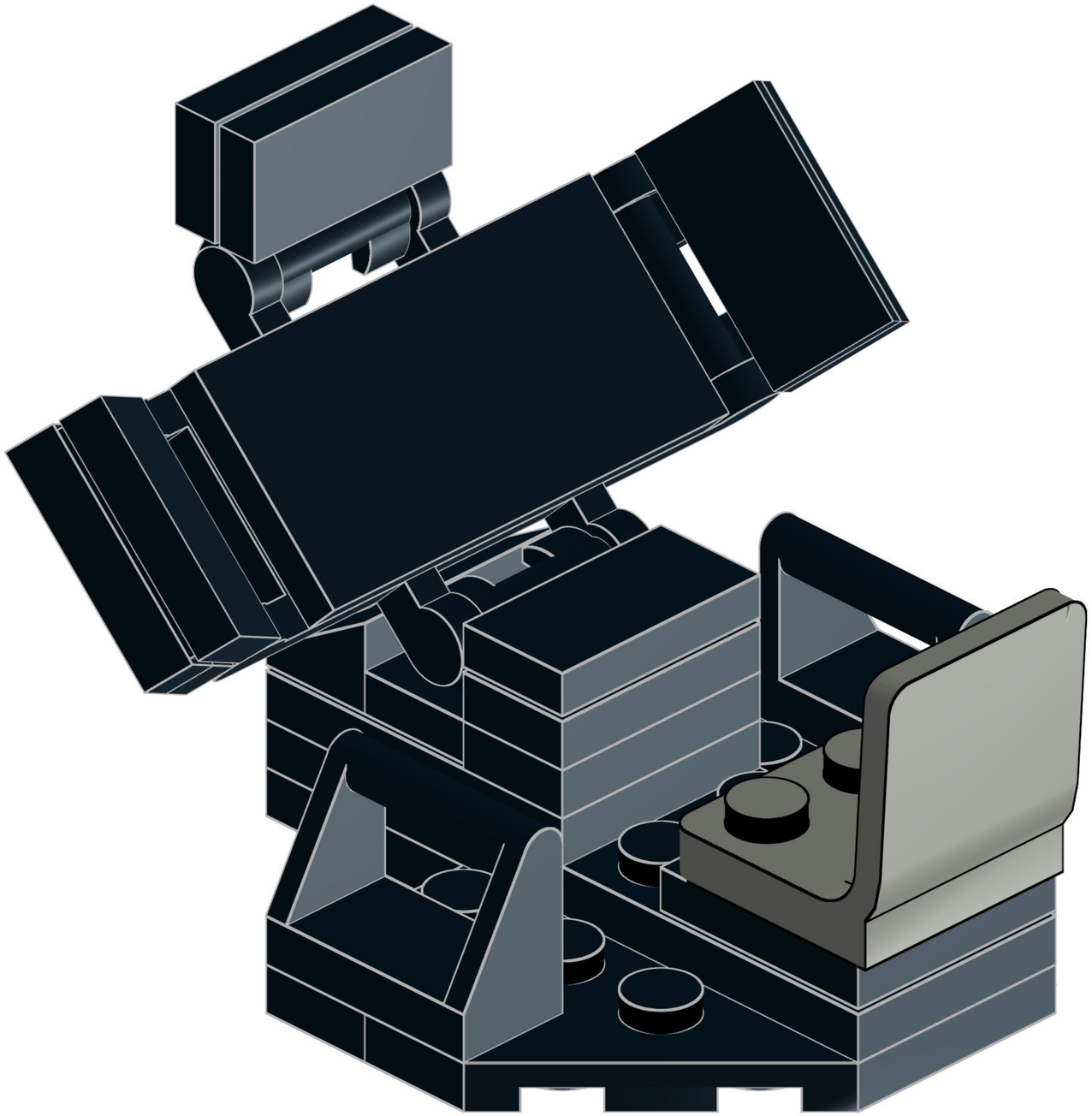

136

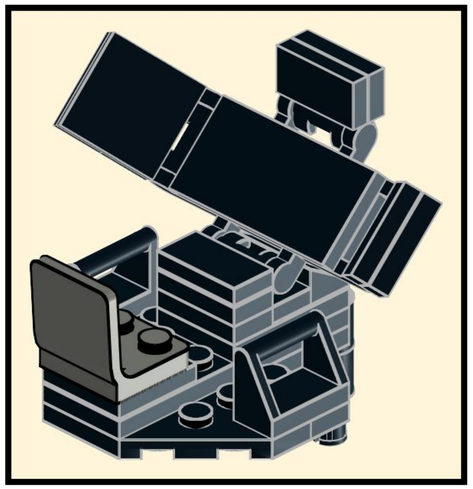

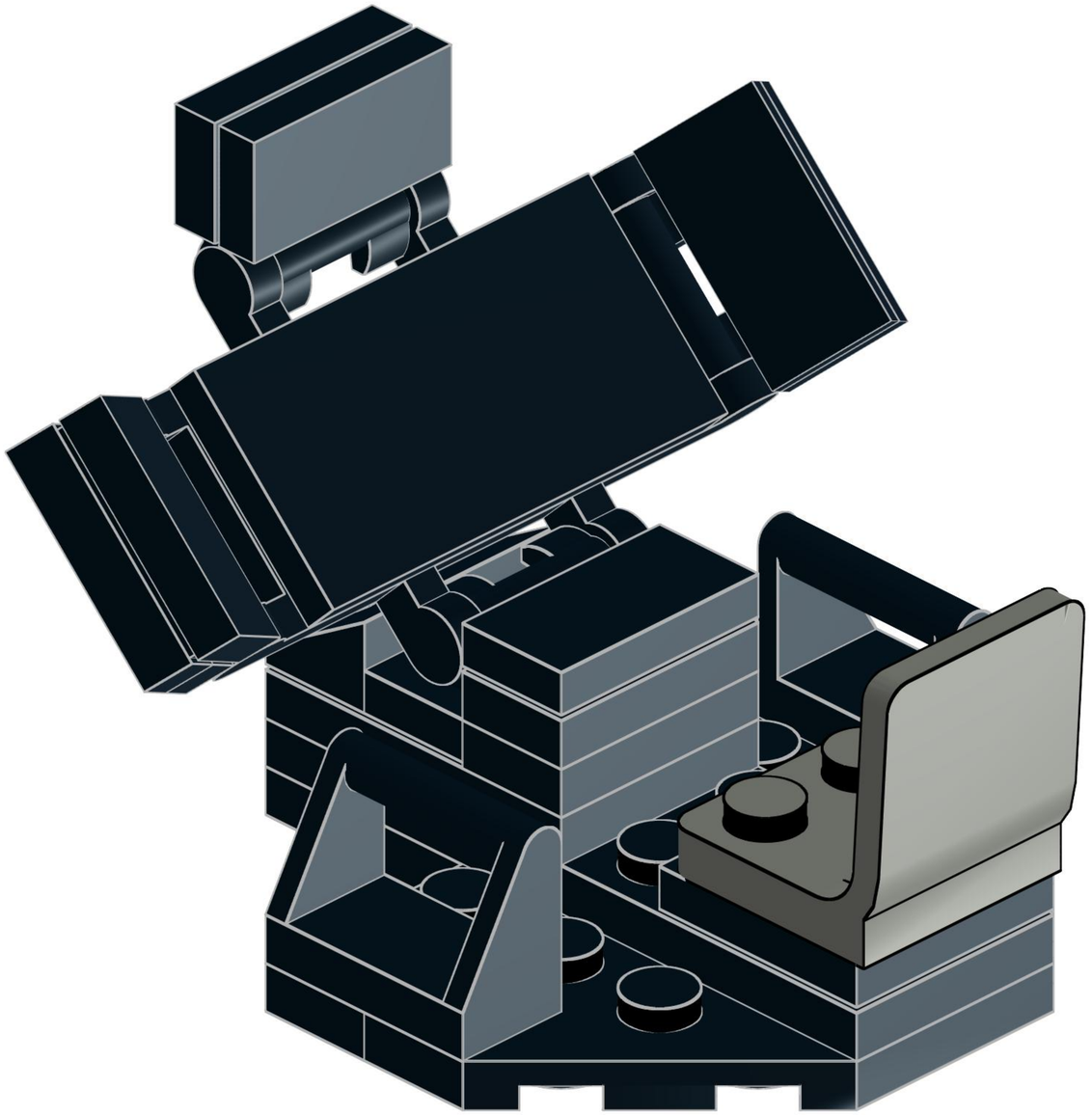

For simplicity, this Bat Computer has been built with blank, black screens (tiles). For a more appealing module, replace these tiles with other screens, panels or keyboard tiles you may already have in your collection.

137

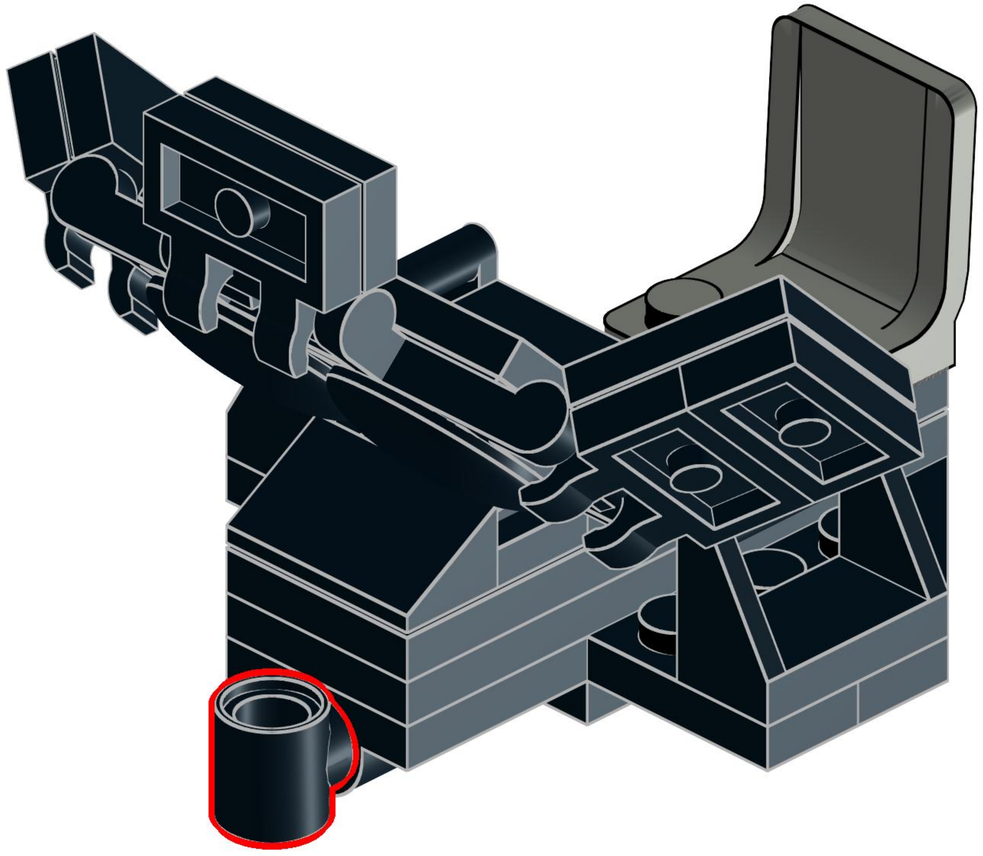

Once the Bat Computer is attached to the module body, you will need to rotate it at this connection, to position it level with the ground.

138

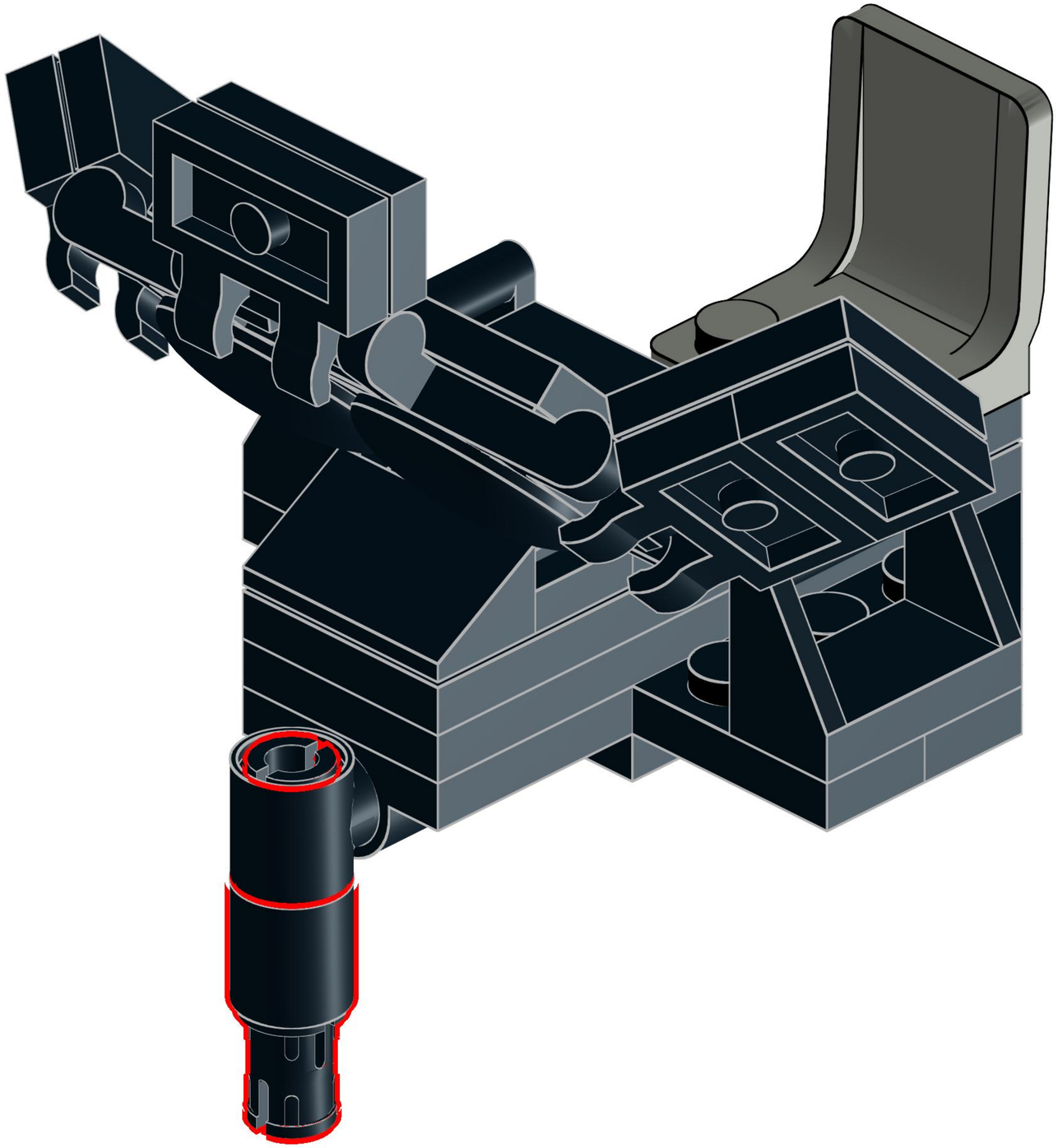

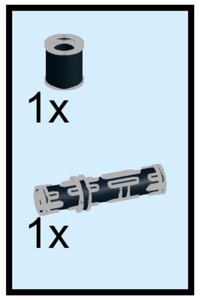

139

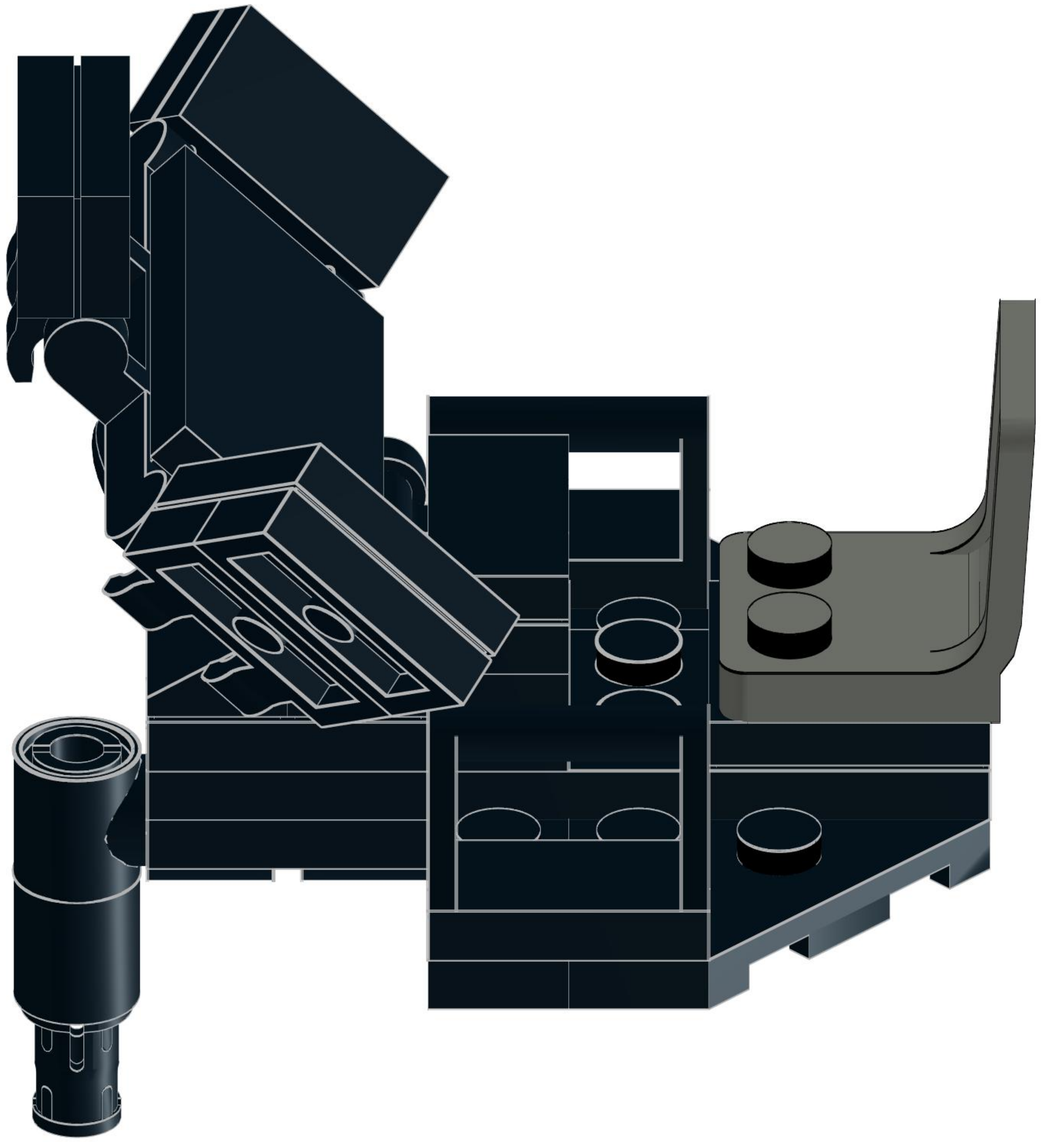

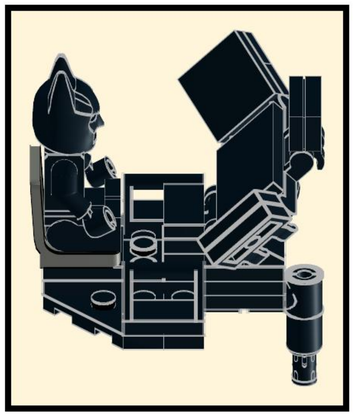

140

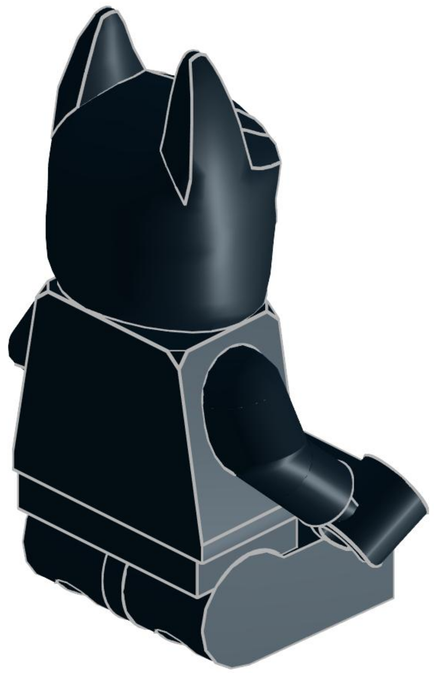

Stunt-double for instruction purposes only.

Replace with a real hero!

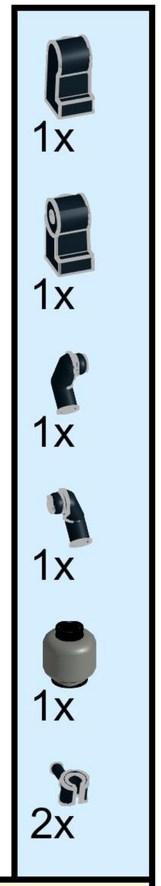

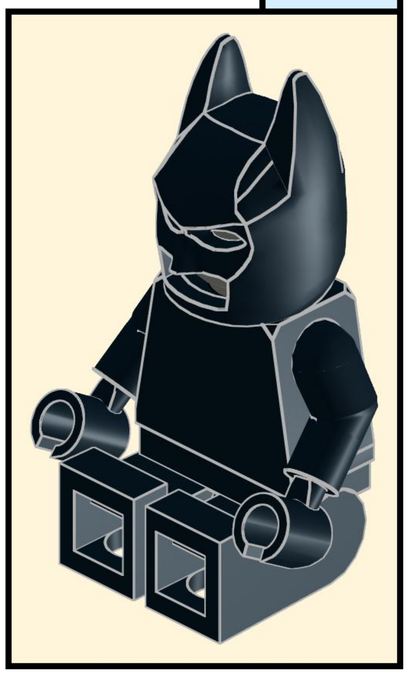

141

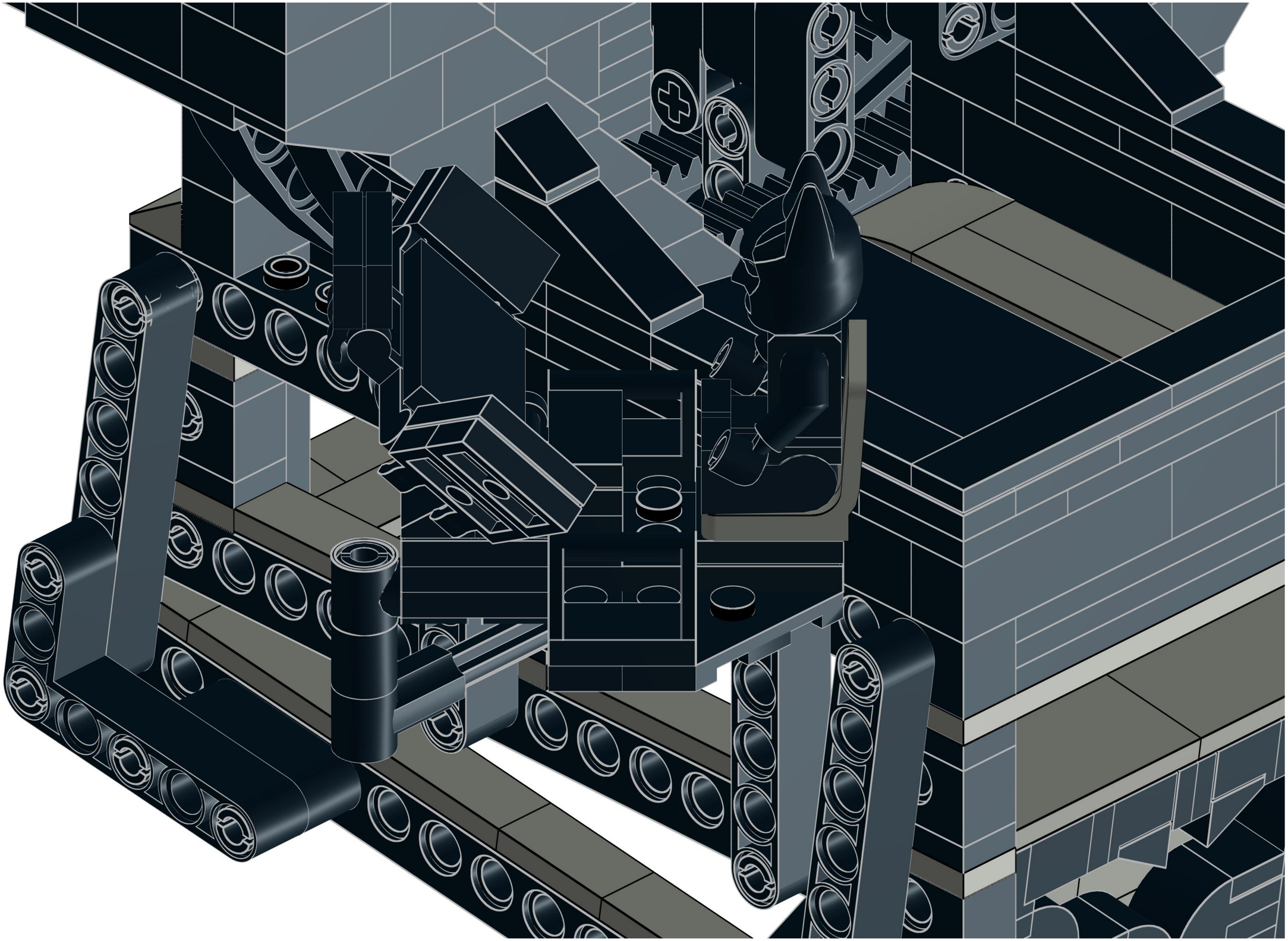

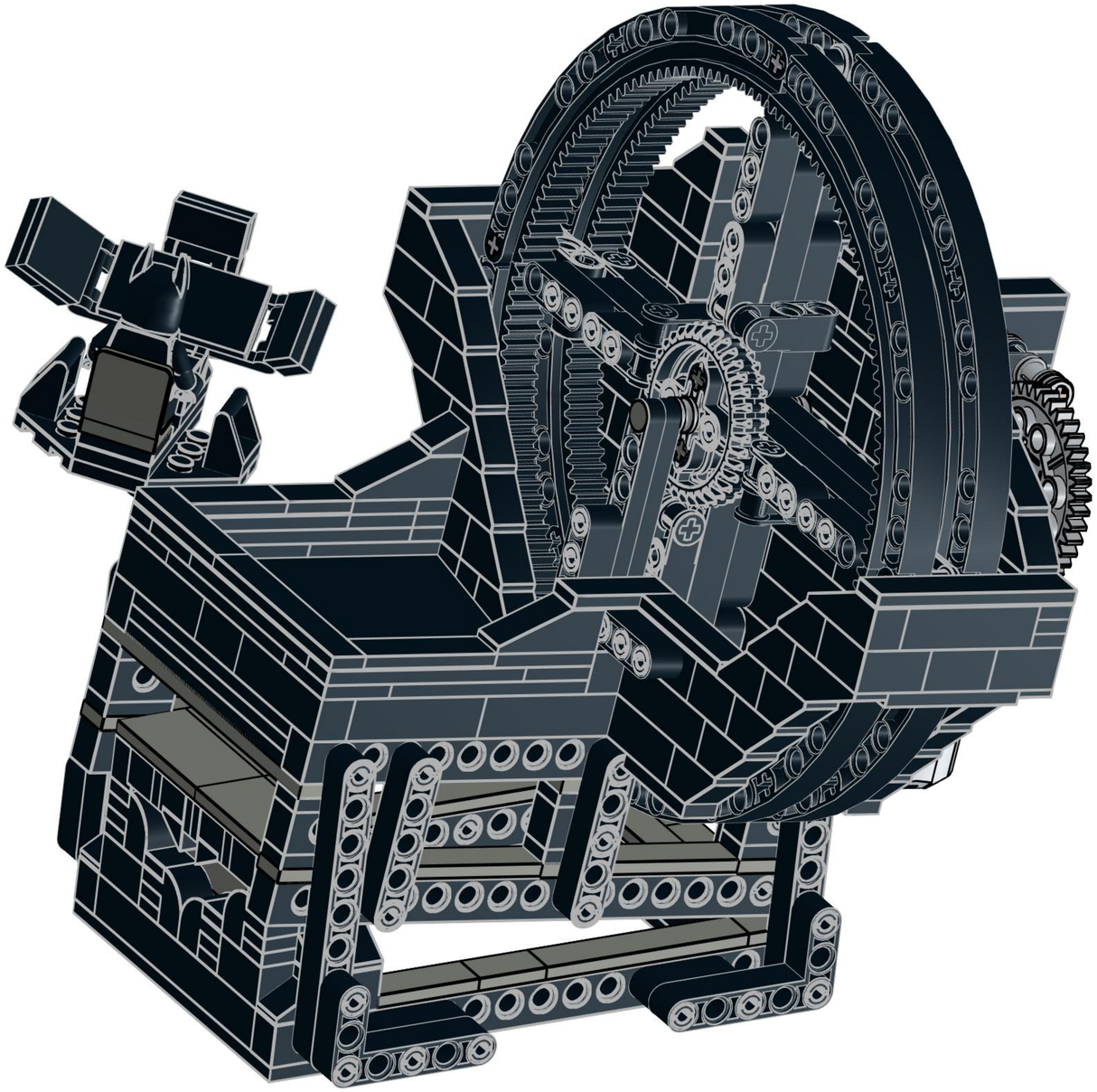

"I only work in black. And sometimes very, very dark grey." - Lego Batman.
Enjoy your new module!

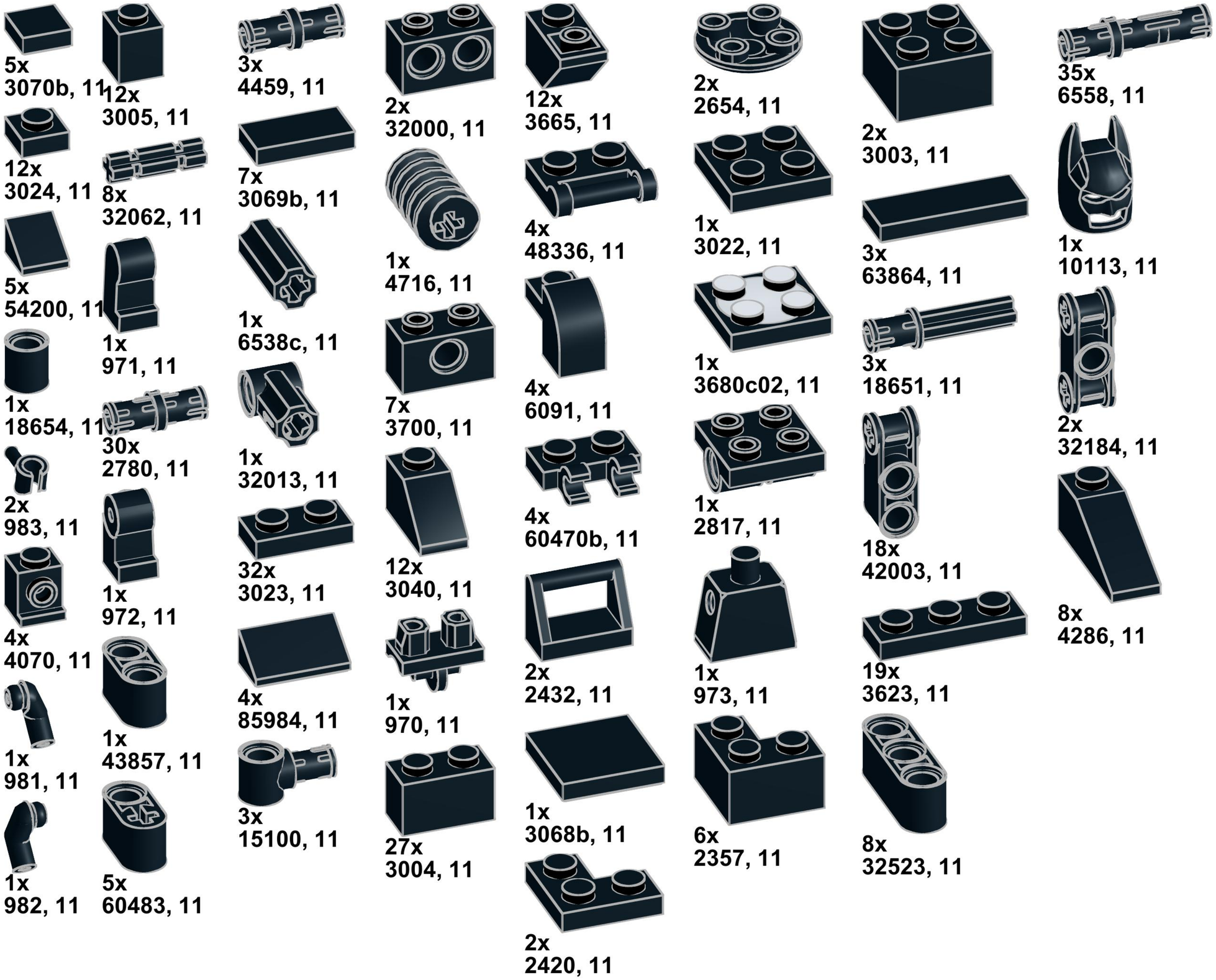
5x
3070b, 11
12x
3005, 11
12x
3024, 11
8x
32062, 11
5x
54200, 11
1x
971, 11
1x
18654, 11
30x
2780, 11
2x
983, 11
1x
972, 11
4x
4070, 11
1x
43857, 11
1x
981, 11
5x
60483, 11
1x
982, 11
3x
4459, 11
7x
3069b, 11
1x
6538c, 11
1x
32013, 11
32x
3023, 11
4x
85984, 11
3x
15100, 11
2x
32000, 11
1x
4716, 11
7x
3700, 11
12x
3040, 11
1x
970, 11
27x
3004, 11
12x
3665, 11
4x
48336, 11
4x
6091, 11
4x
60470b, 11
2x
2432, 11
1x
3068b, 11
2x
2420, 11
2x
2654, 11
1x
3022, 11
1x
3680c02, 11
1x
2817, 11
1x
973, 11
6x
2357, 11
2x
3003, 11
3x
63864, 11
3x
18651, 11
18x
42003, 11
19x
3623, 11
8x
32523, 11
35x
6558, 11
1x
10113, 11
2x
32184, 11
8x
4286, 11

4x
4287, 11

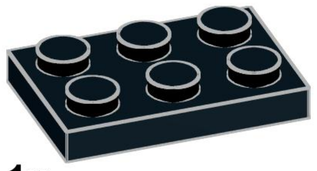

1x
3021, 11

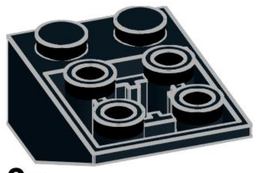

3x
3747b, 11

1x
3705, 11

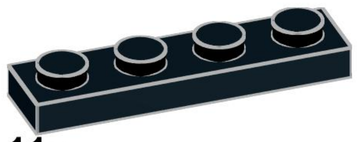

11x
3710, 11

6x
2431, 11

1x
3701, 11

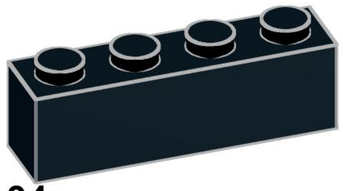

34x
3010, 11

1x
87079, 11

4x
3001, 11

9x
32316, 11

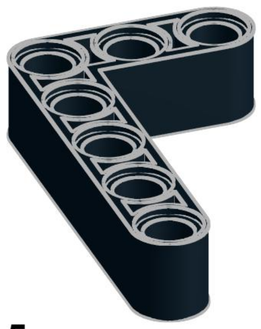

5x
32526, 11

2x
32063, 11

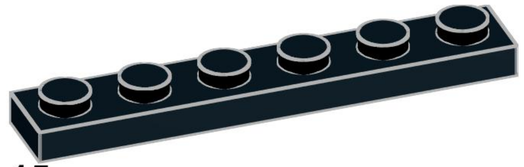

15x
3666, 11

6x
6636, 11

1x
3706, 11

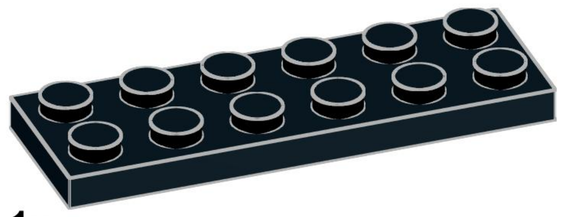

1x
3795, 11

1x
32498, 11

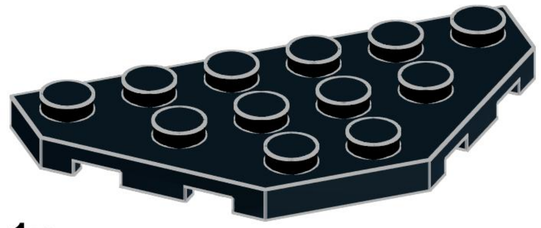

1x
2419, 11

6x
32524, 11

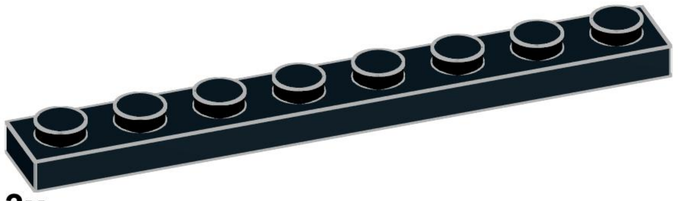

3x
3460, 11

1x
4162, 11

1x
3008, 11

4x
3034, 11

2x
40490, 11

1x
3036, 11

1x
4477, 11

1x
4515, 11

1x
32525, 11

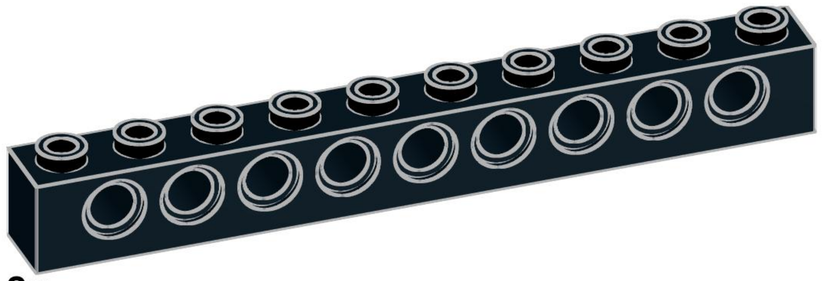

2x
2730, 11

2x
3832, 11

8x
24121, 11

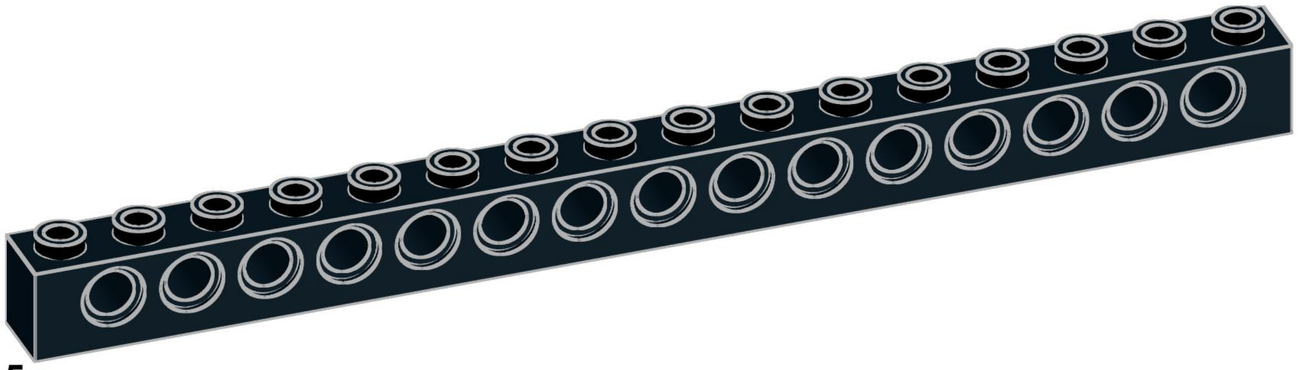

5x
3703, 11

2x
54200, 85

1x
3626c, 85

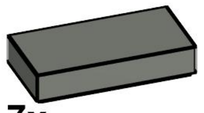

7x
3069b, 85

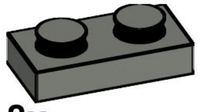

8x
3023, 85

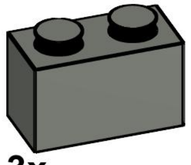

3x
3004, 85

1x
15068, 85

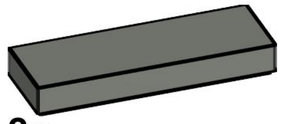

2x
63864, 85

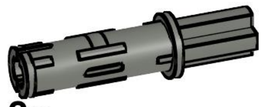

2x
11214, 85

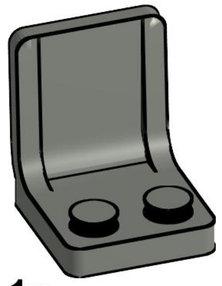

1x
4079b, 85

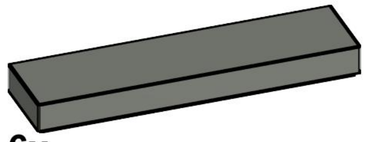

6x
2431, 85

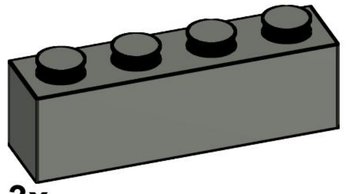

3x
3010, 85

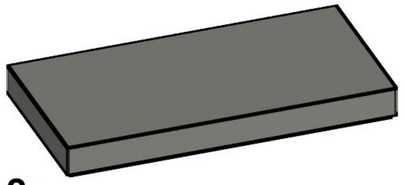

2x
87079, 85

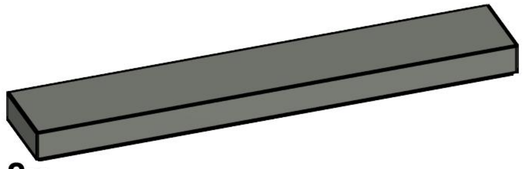

8x
6636, 85

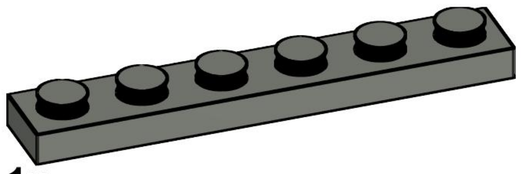

1x
3666, 85

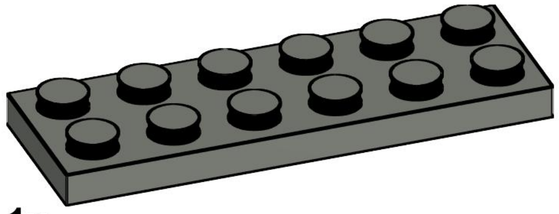

1x
3795, 85

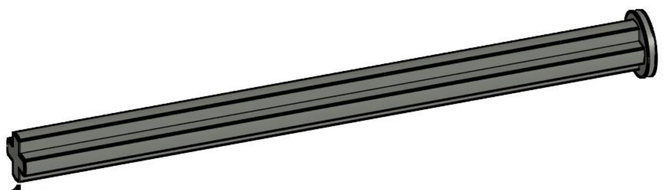

1x
55013, 85

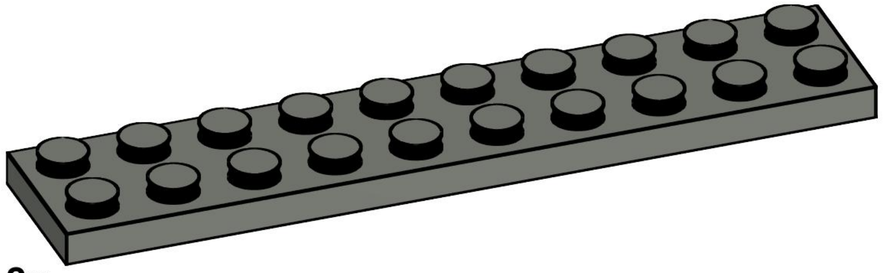

2x
3832, 85

9x
4265c, 86

2x
3713, 86

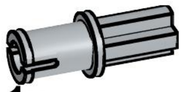

1x
3749, 86

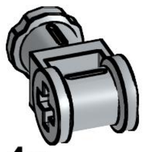

4x
32039, 86

6x
4519, 86

3x
94925, 86

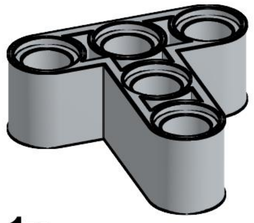

1x
60484, 86

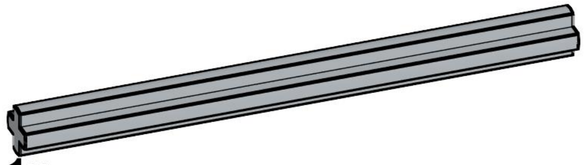

1x
44294, 86

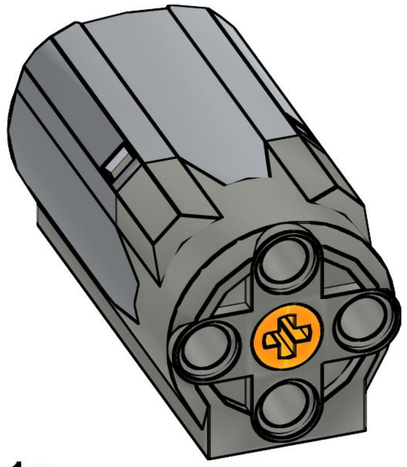

1x
58120c01, 86

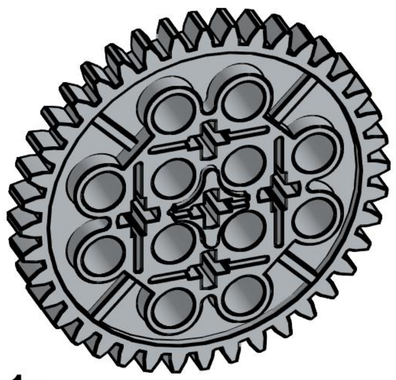

1x
3649, 86