FRIENDLY MIA WHEEL

Version 1.1

Copyright 2019 Ryk Field
Attribution-NonCommercial 4.0 International (CC BY-NC 4.0)
https://creativecommons.org/licenses/by-nc/4.0/

REF06

This GBC Module has been built to accompany the official Lego set, Mia's Heart Box (41358) which was released in January 2019. Buying this set directly may be the cheapest way of obtaining the minidoll, bunny and box parts. Note: The XML parts list includes all of the non-printed, non-minidoll and bunny parts.

1

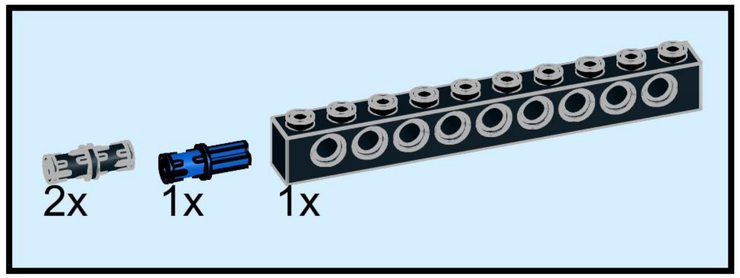

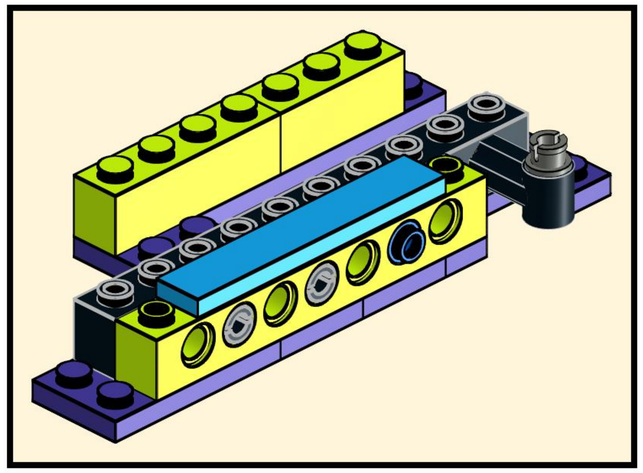

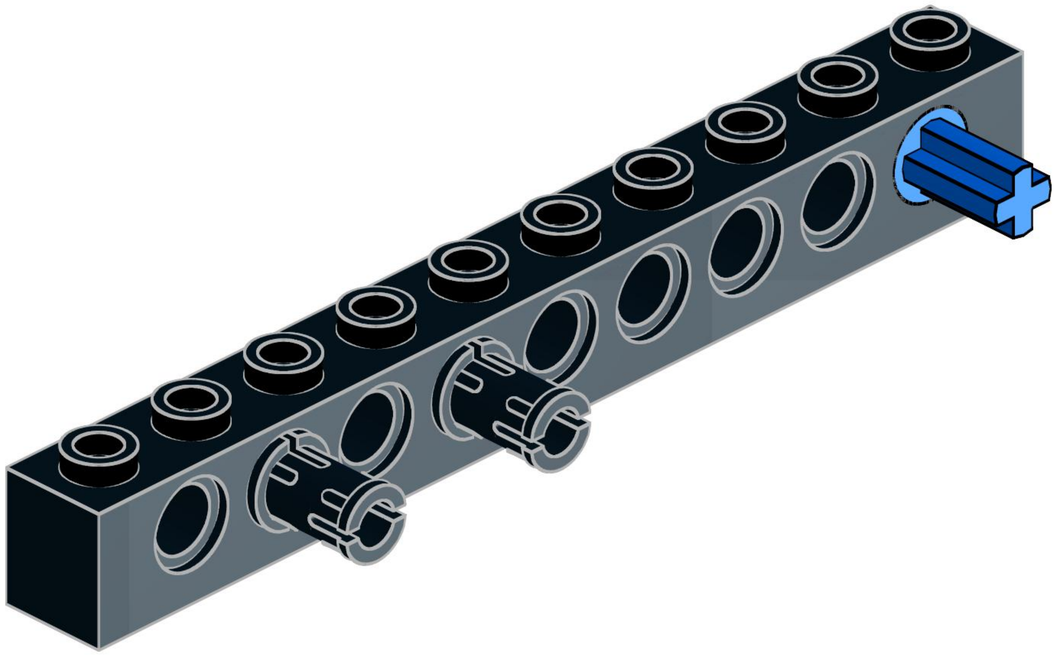

2

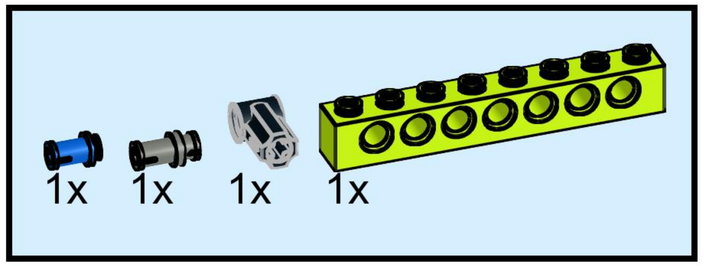

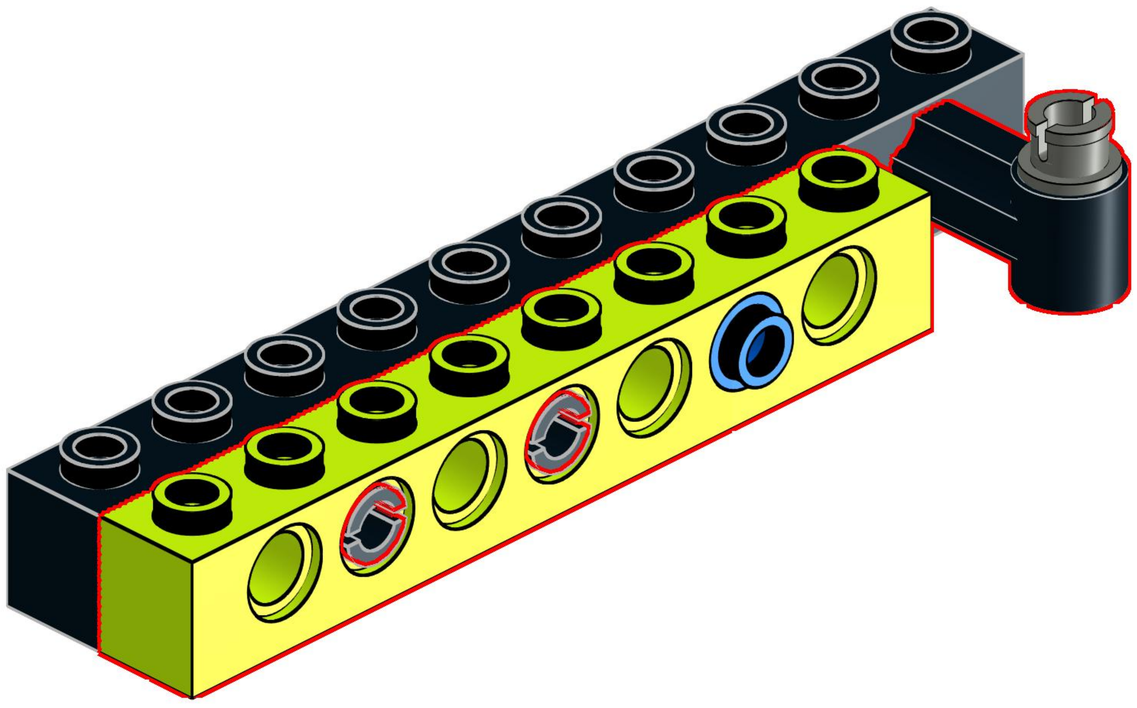

3

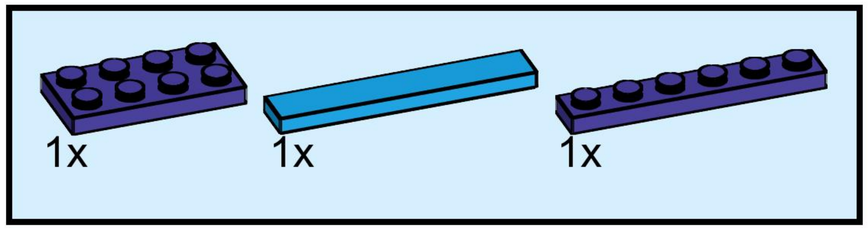

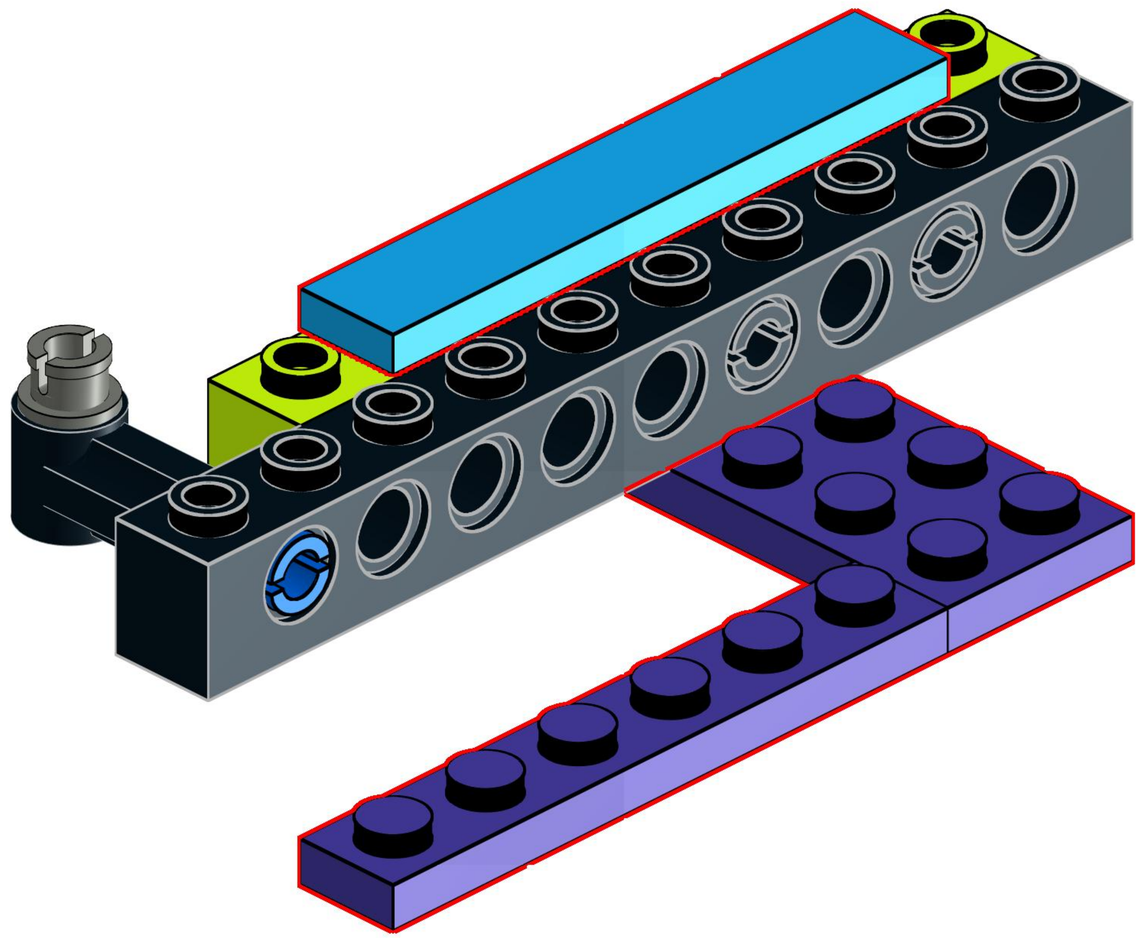

4

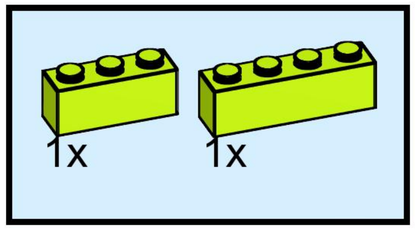

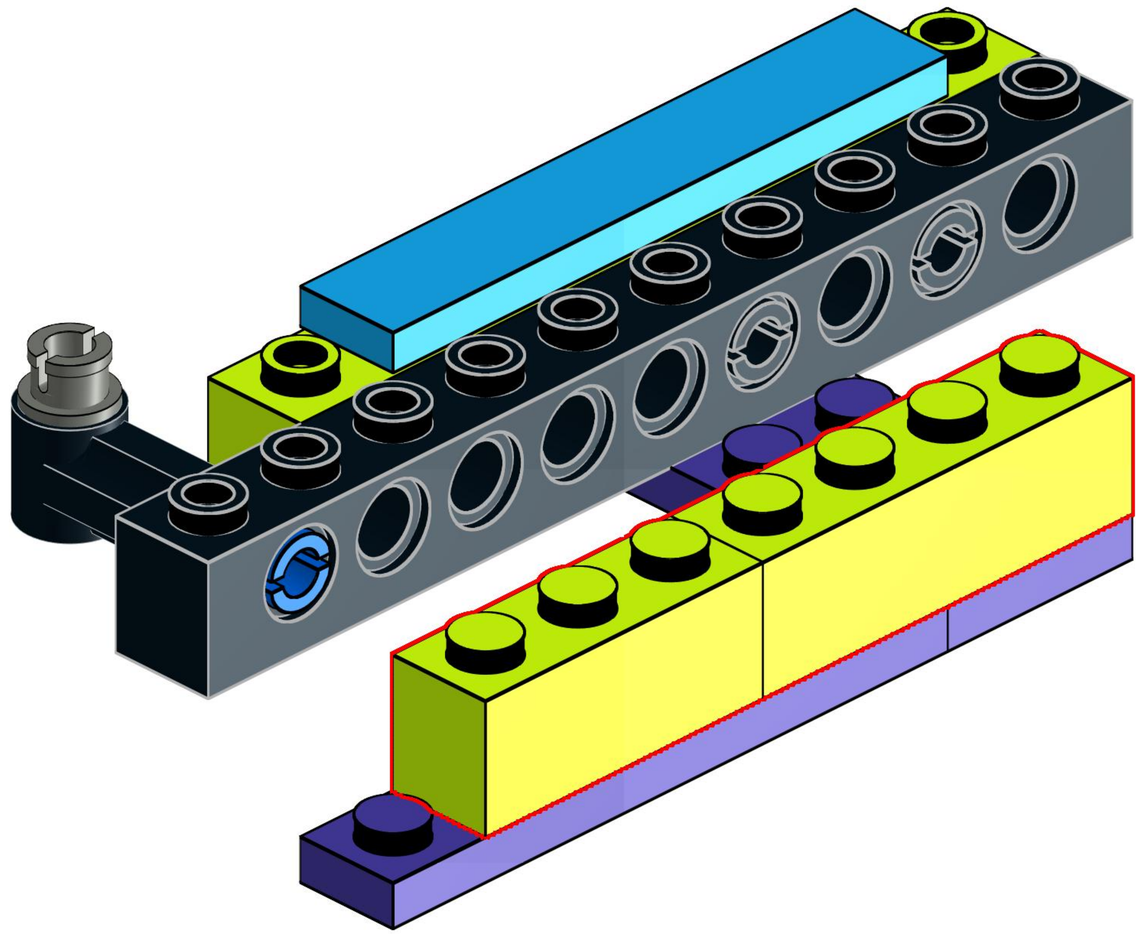

5

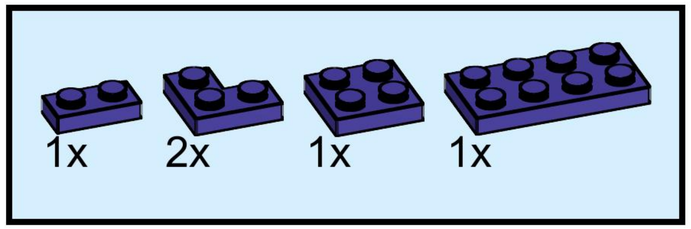

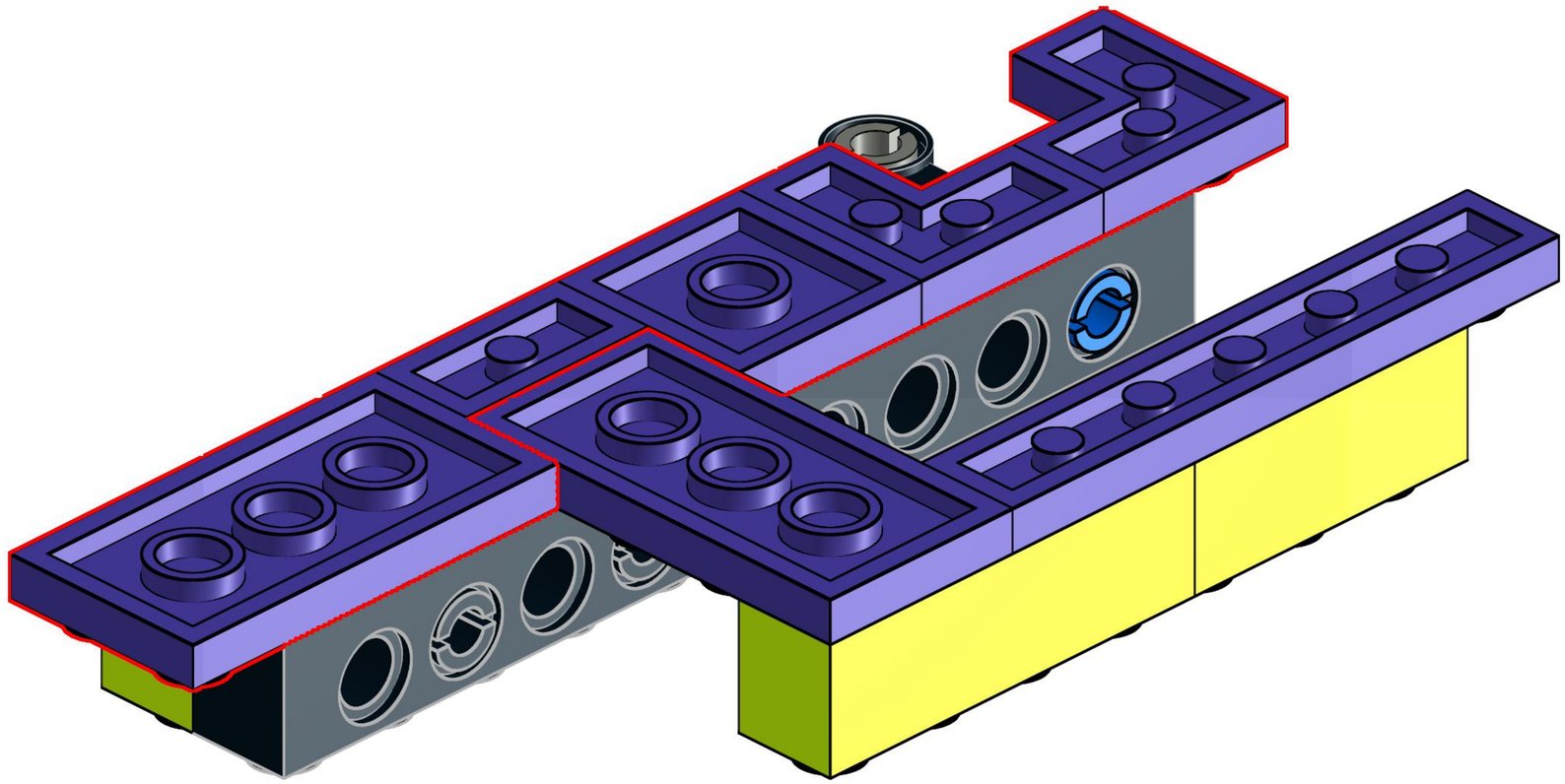

Set aside for later.

6

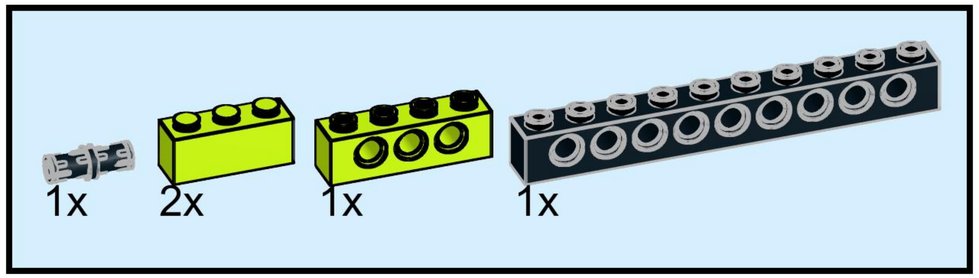

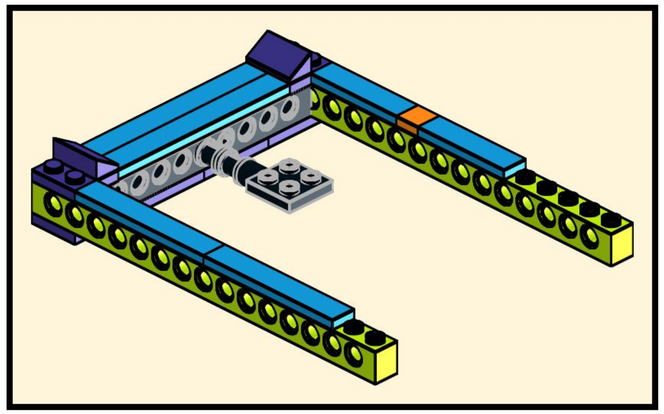

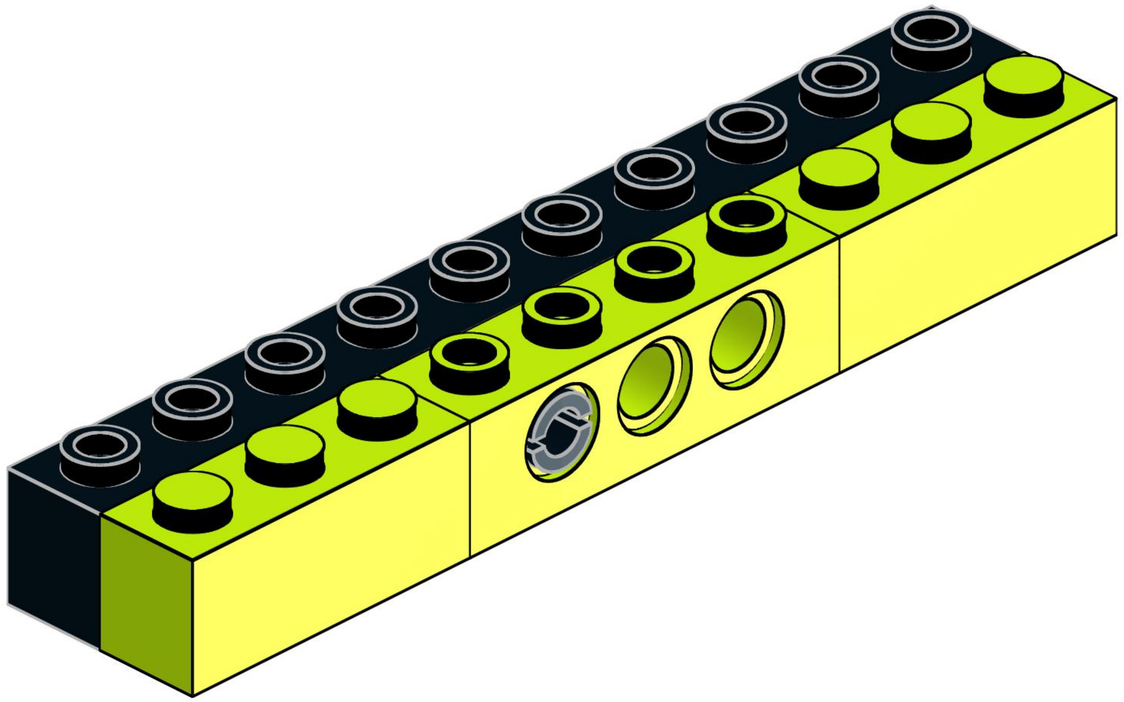

7

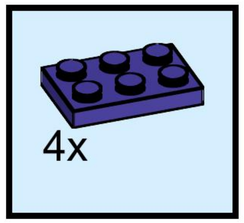

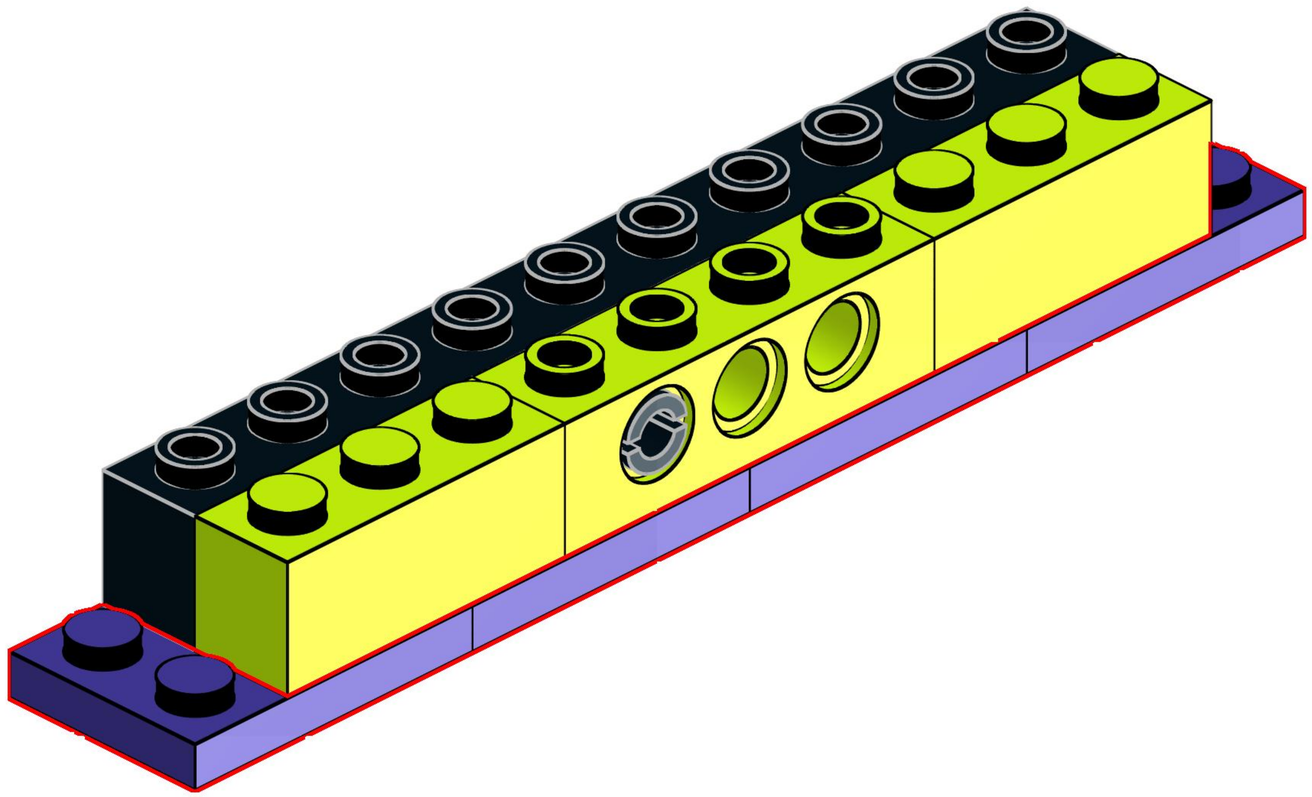

8

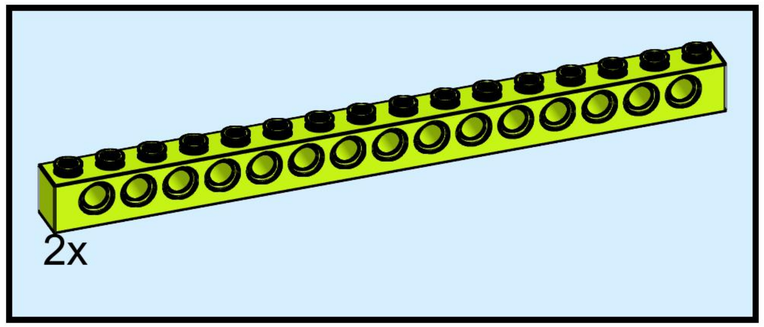

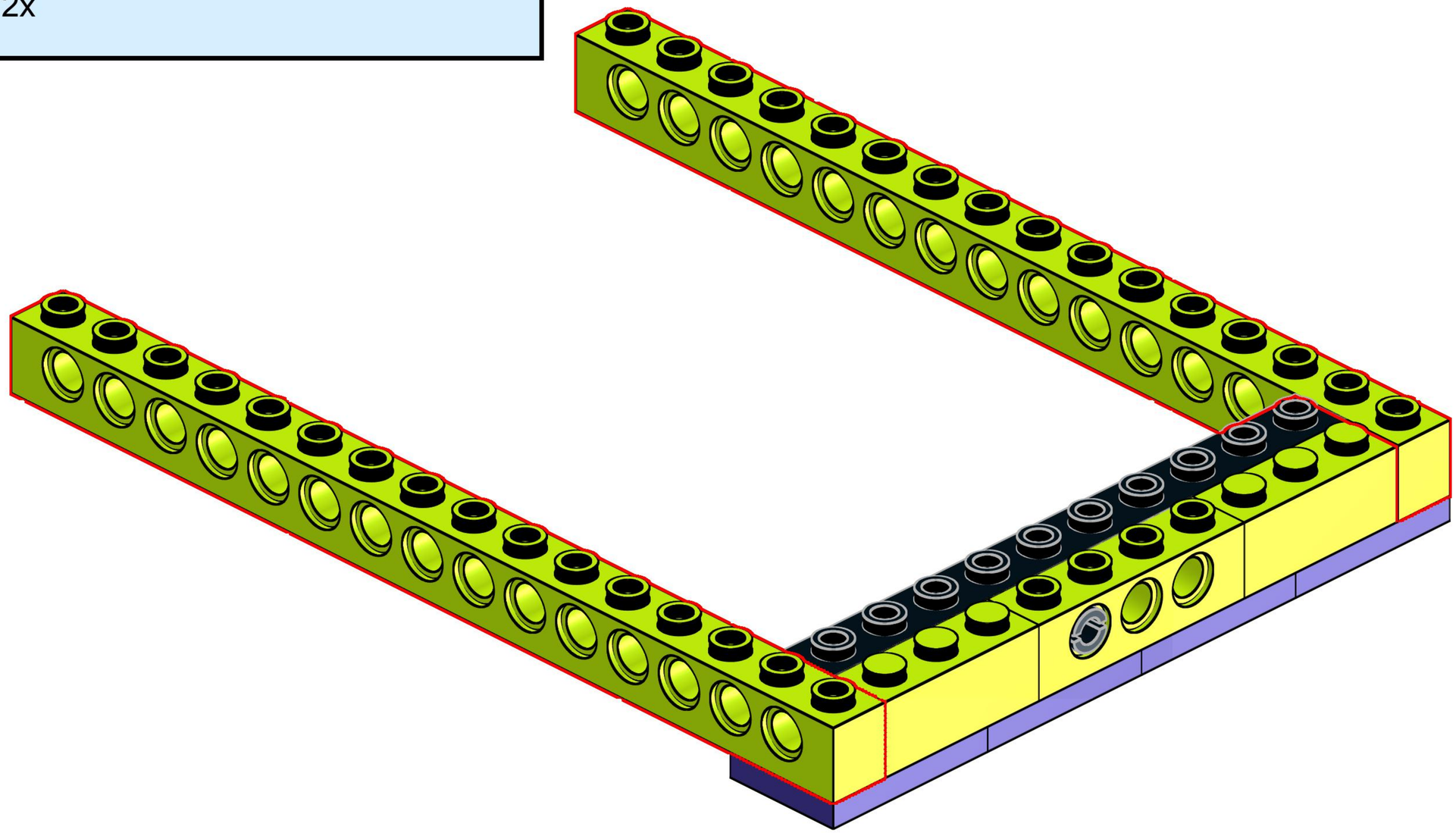

9

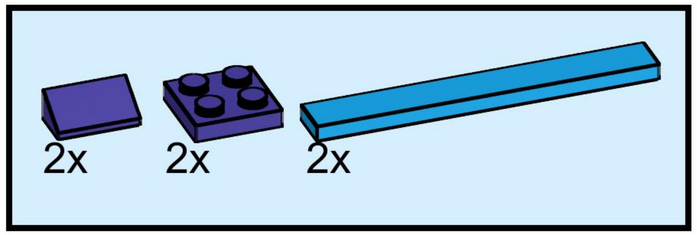

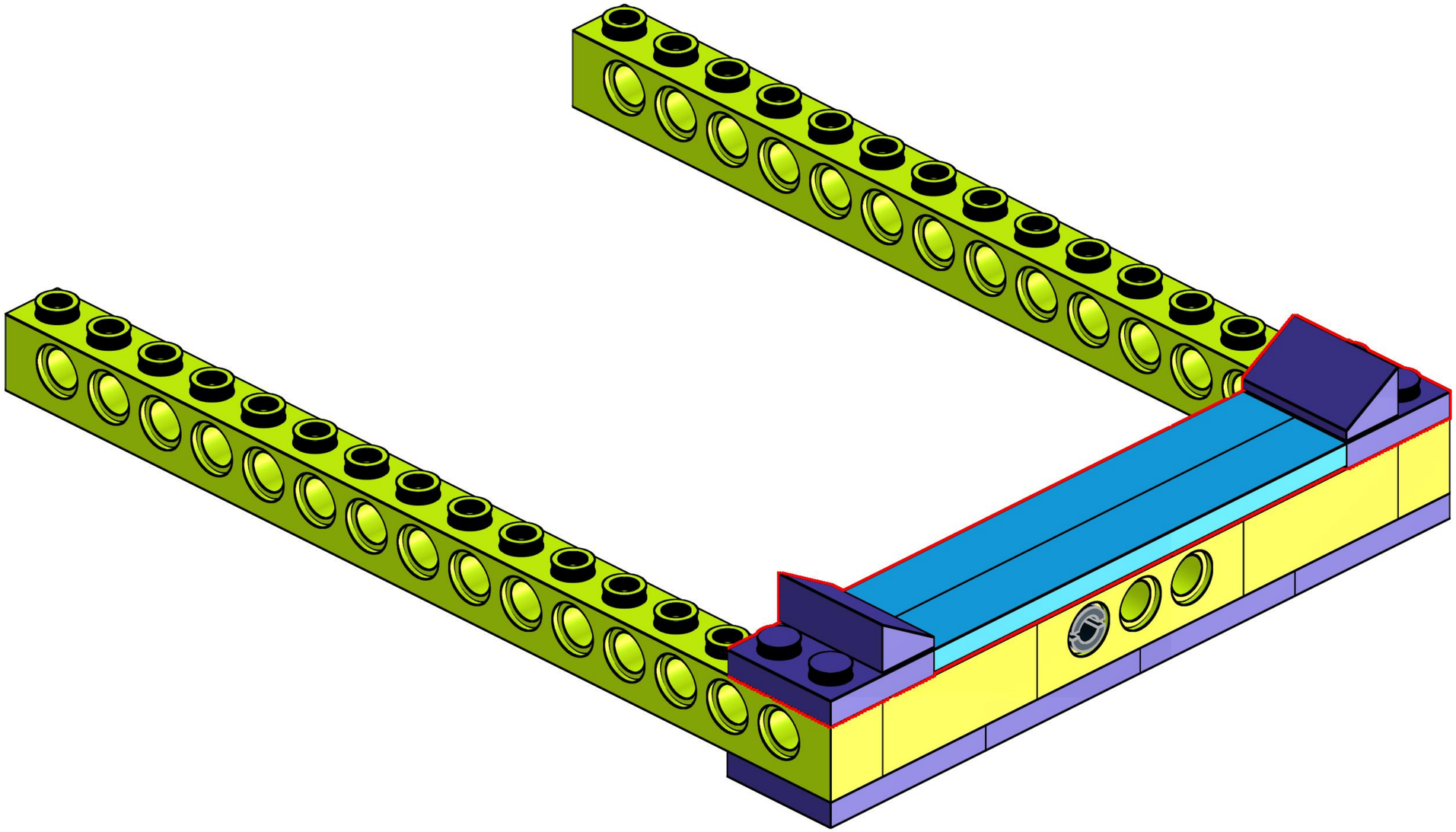

10

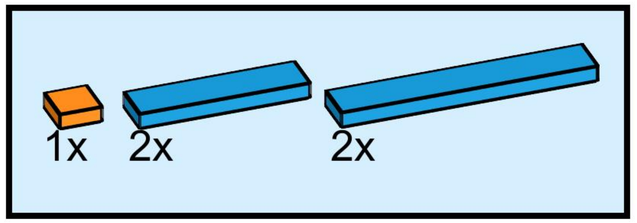

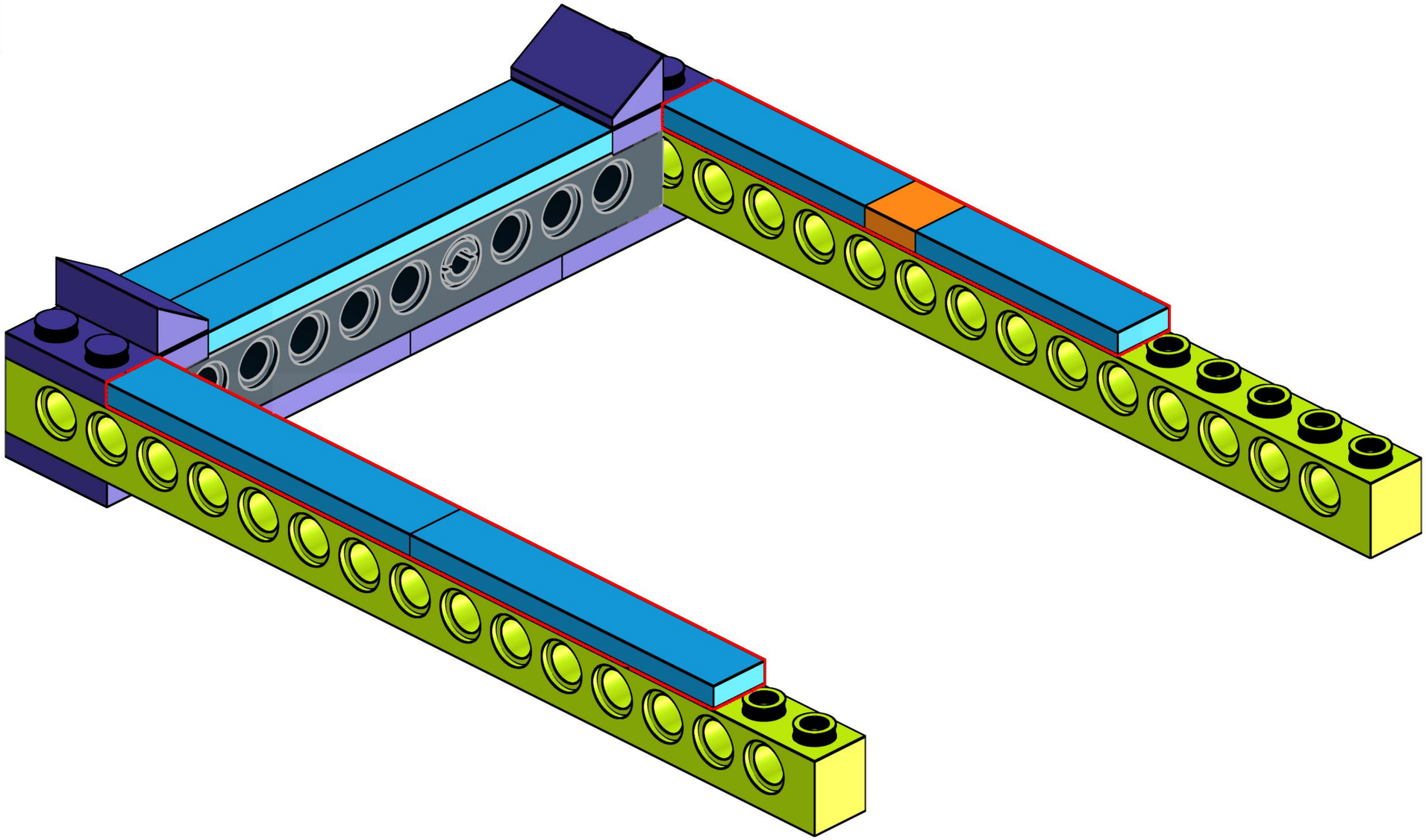

11

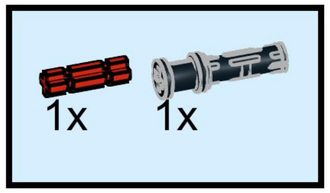

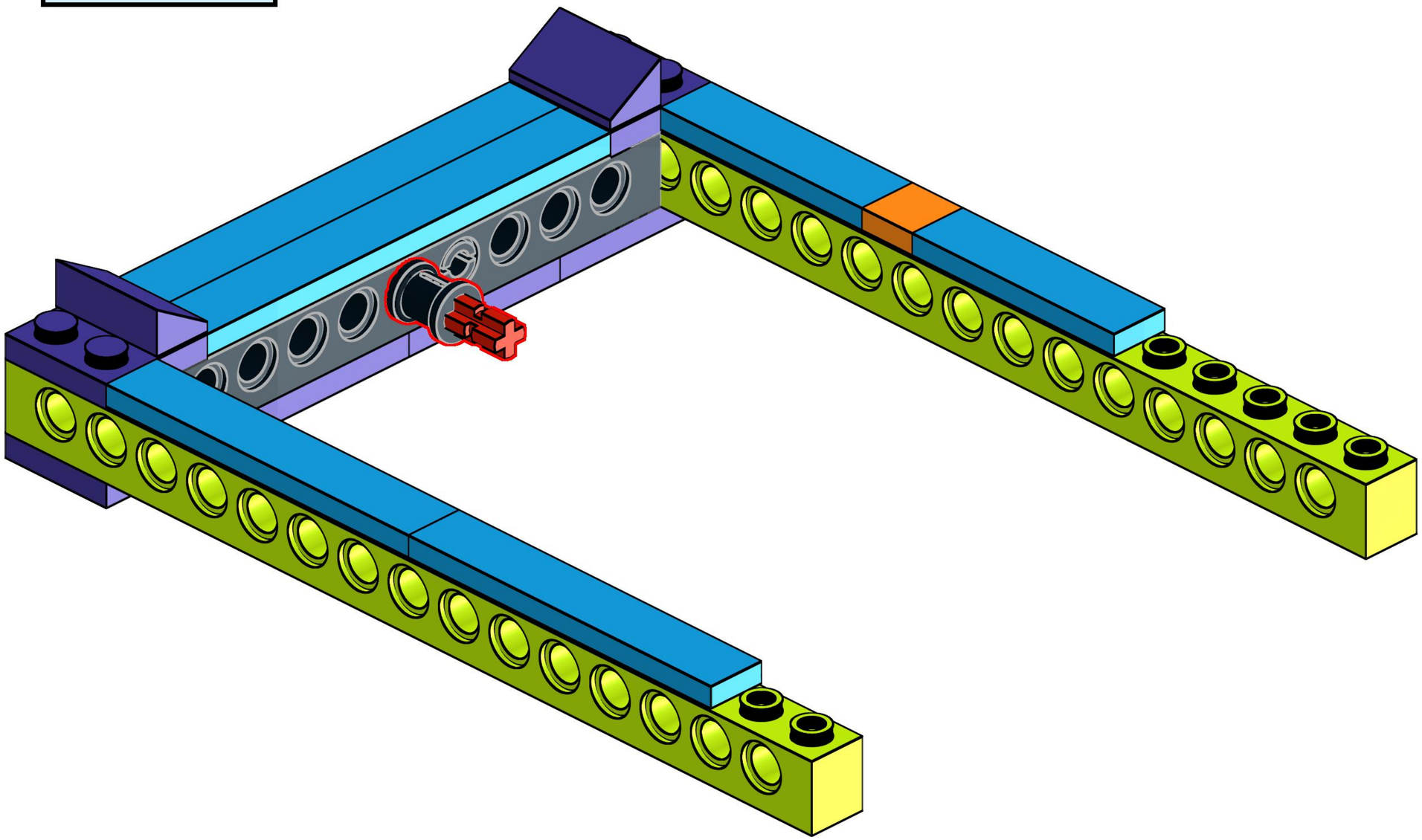

12

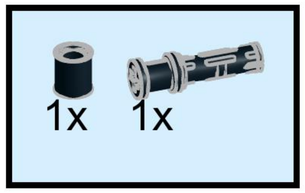

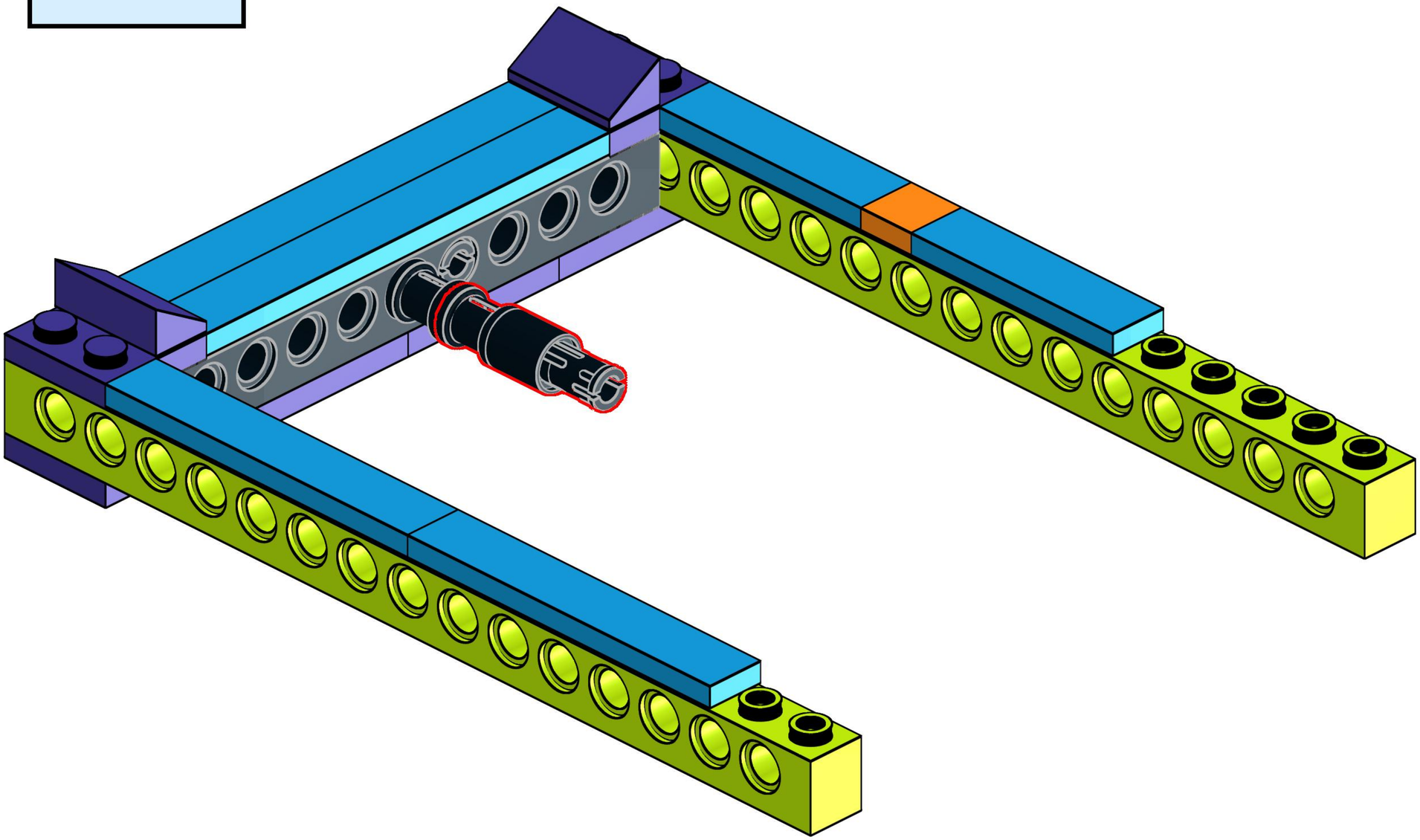

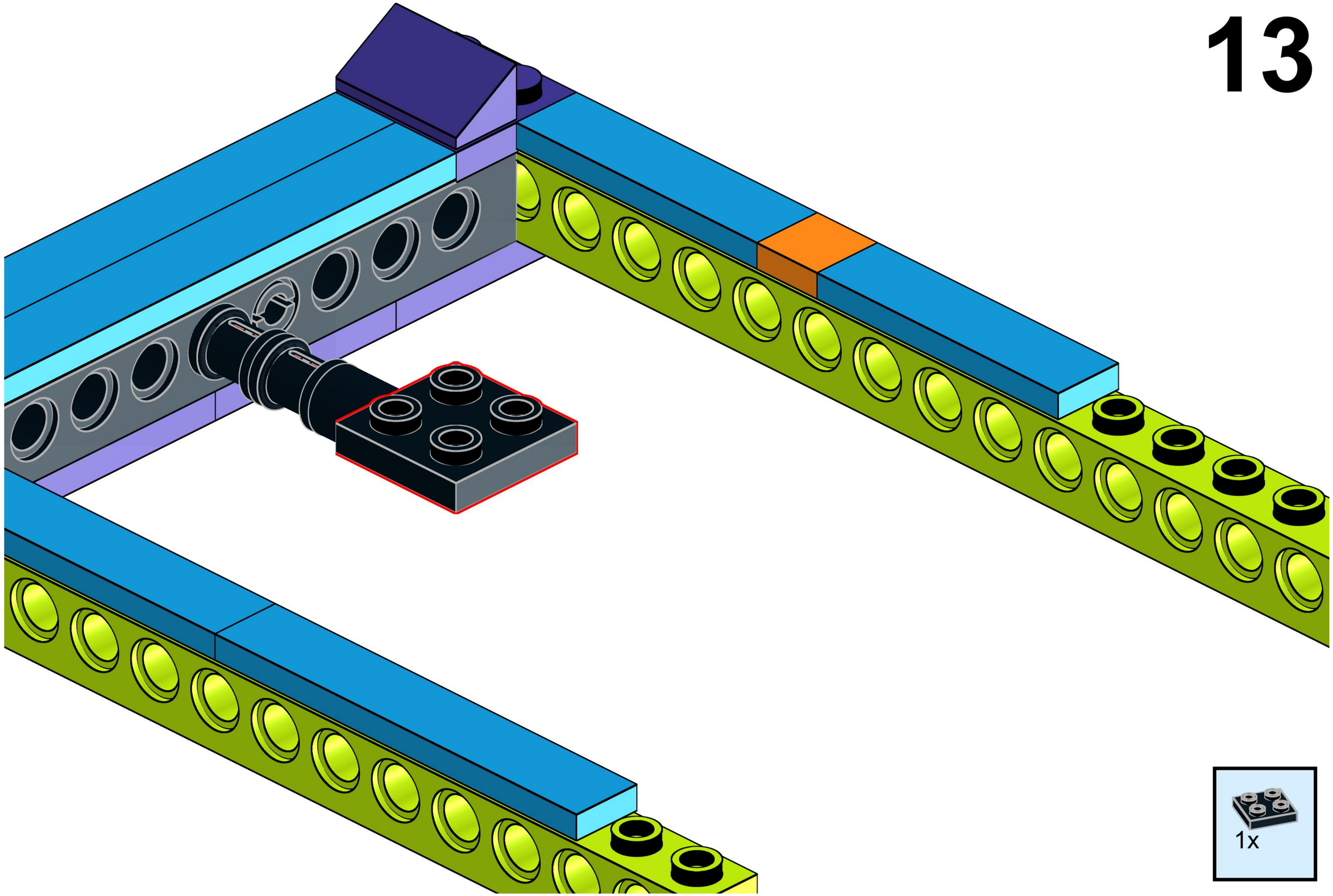
1x

14

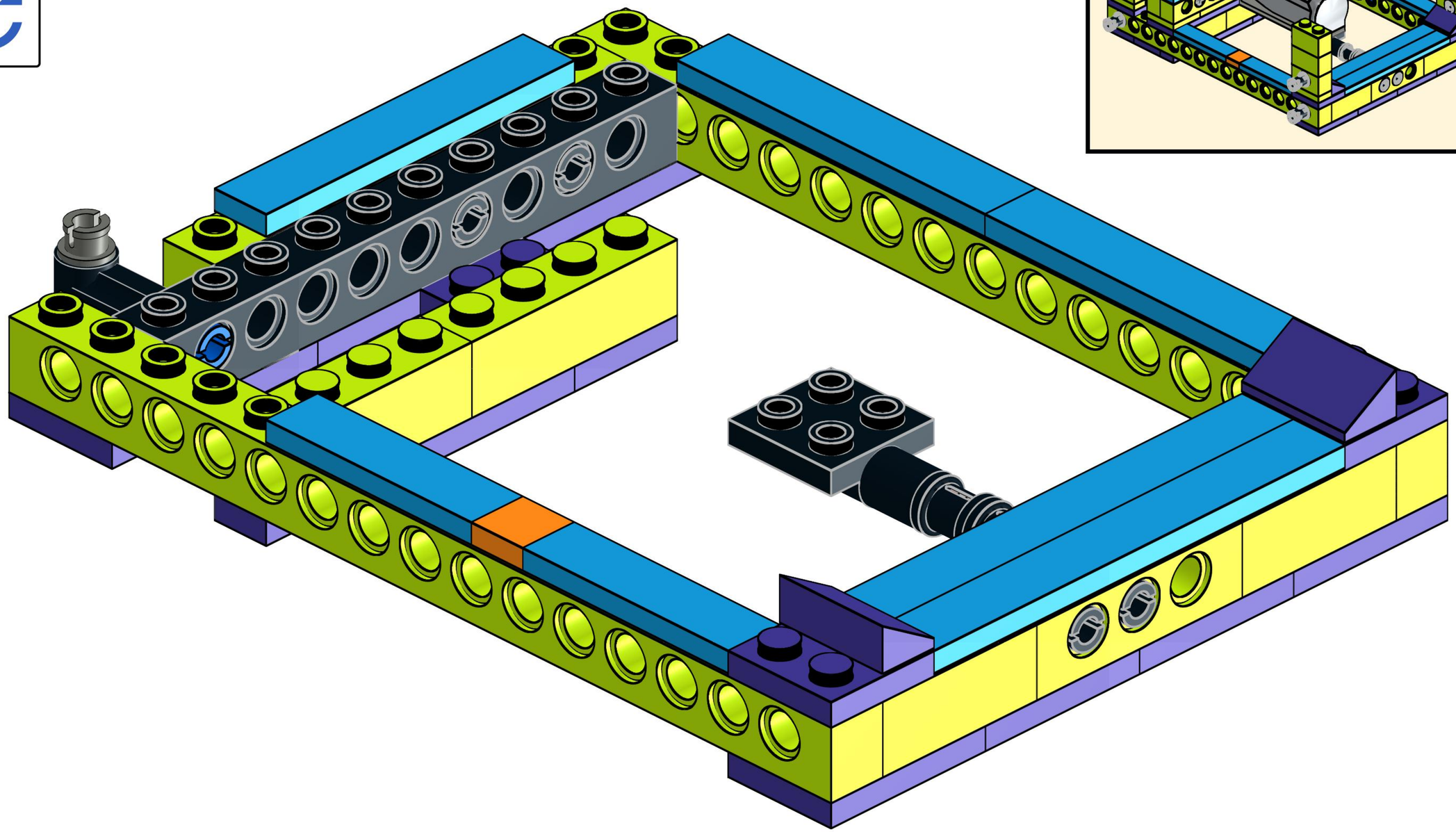

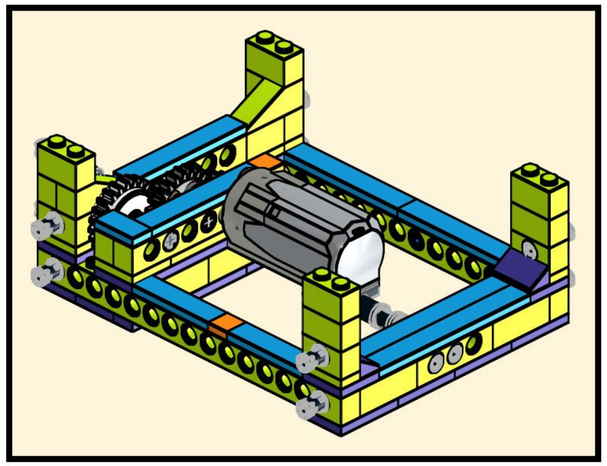

15

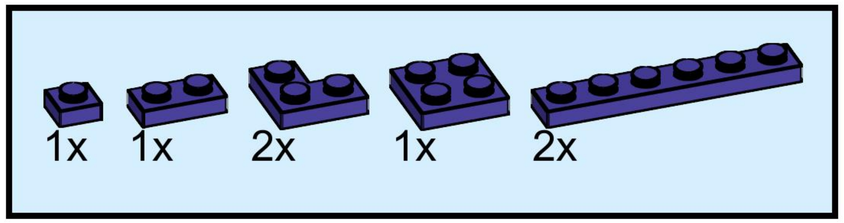

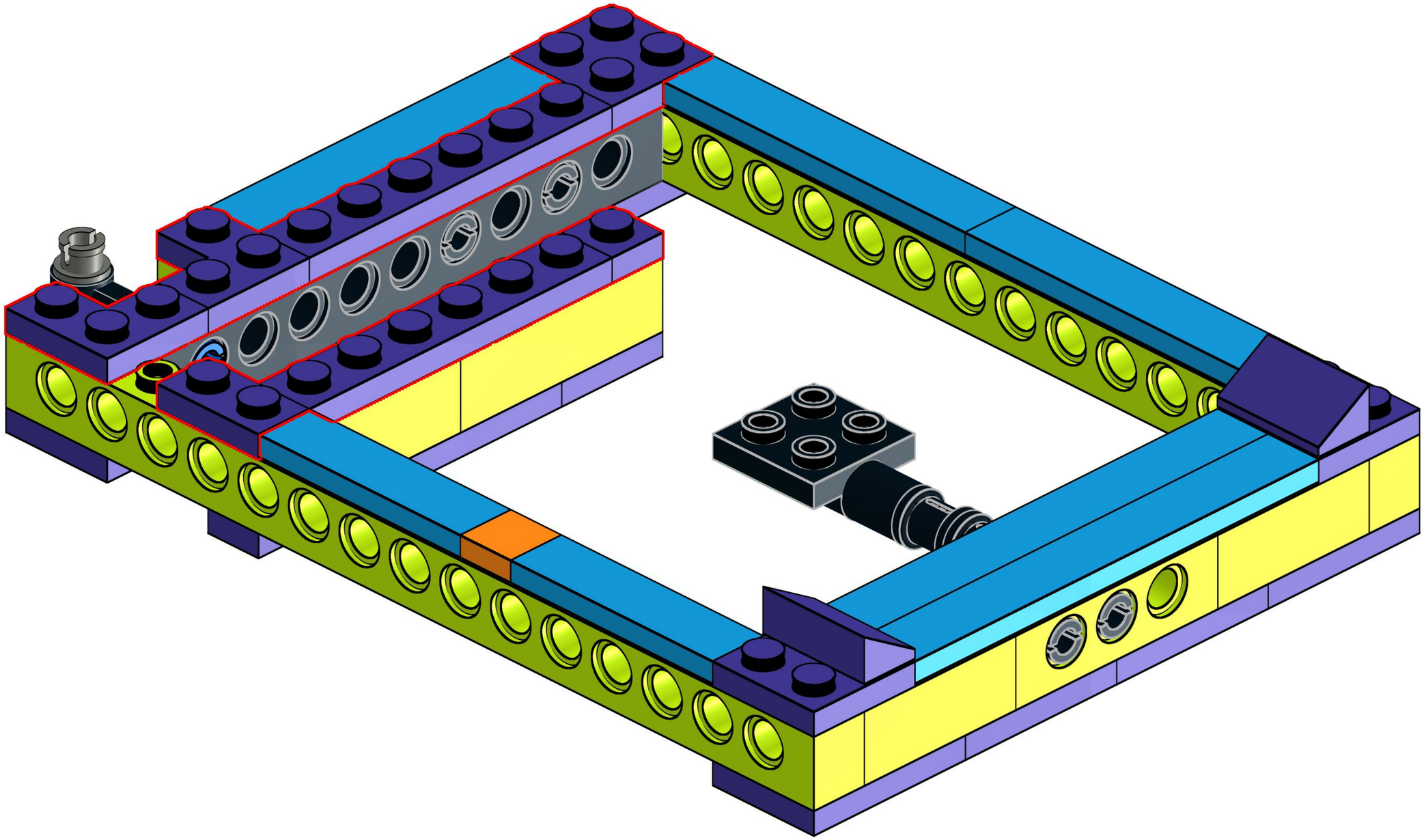

16

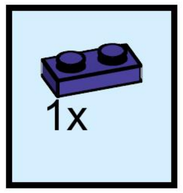

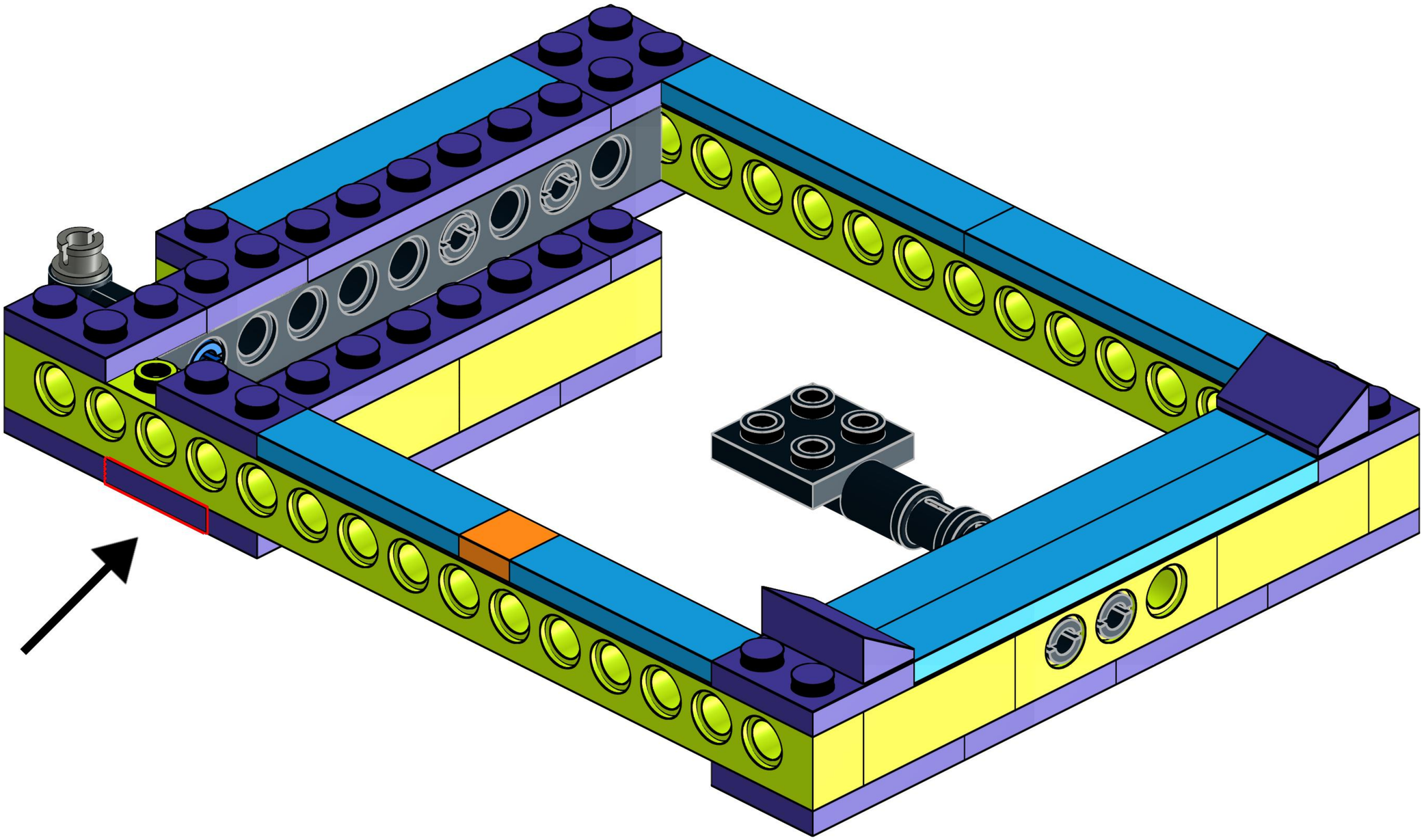

17

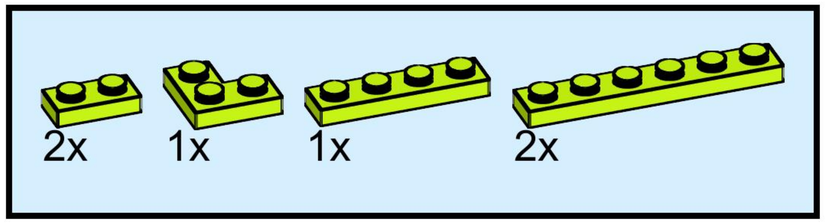

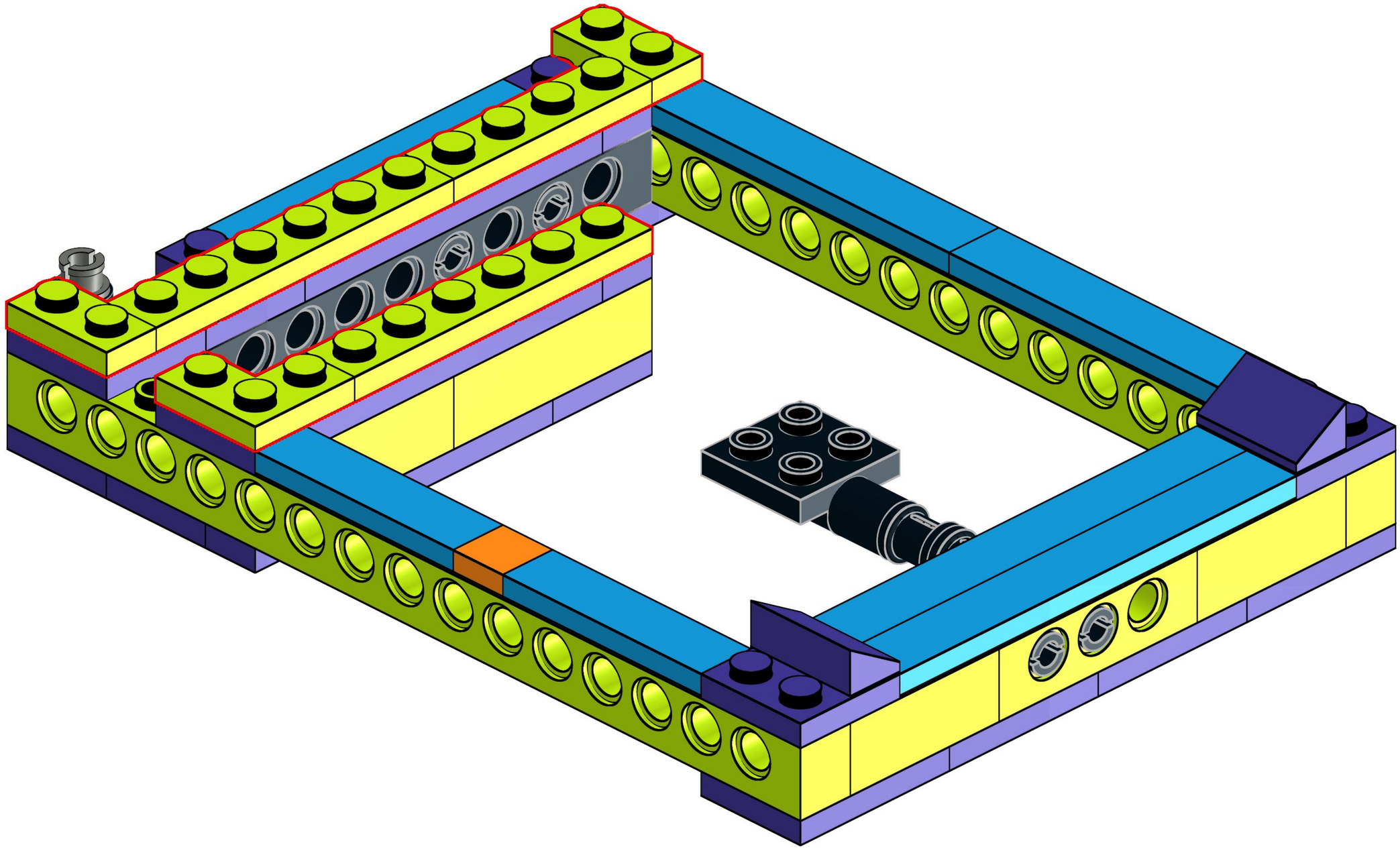

18

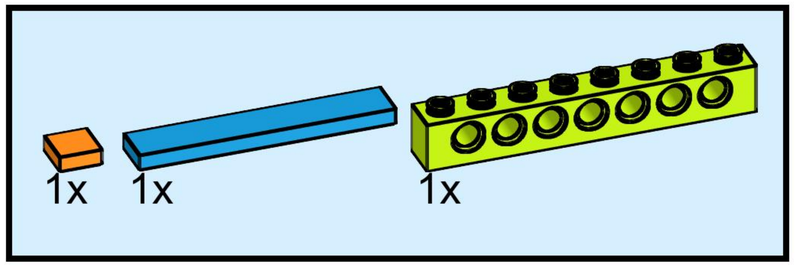

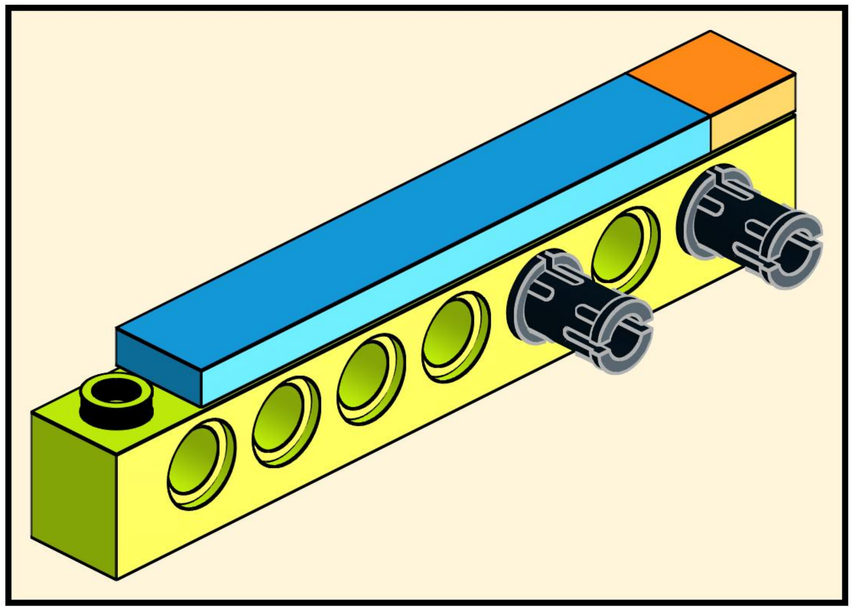

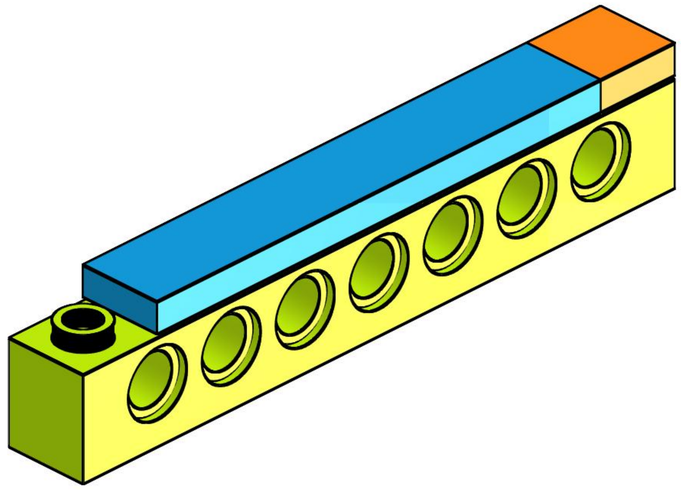

19

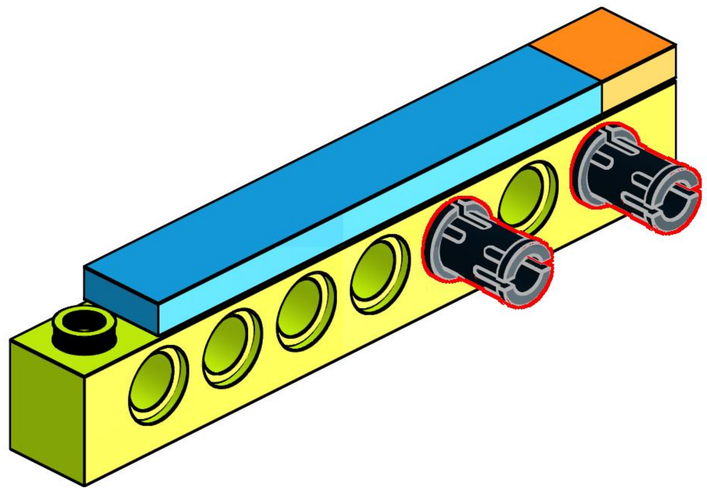

20

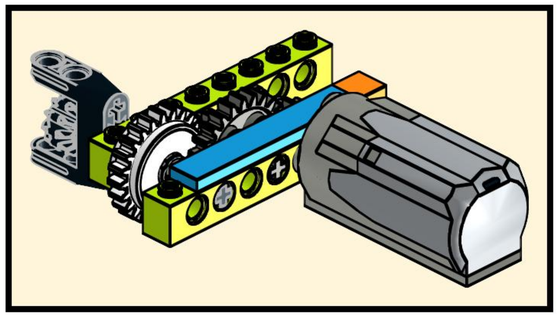

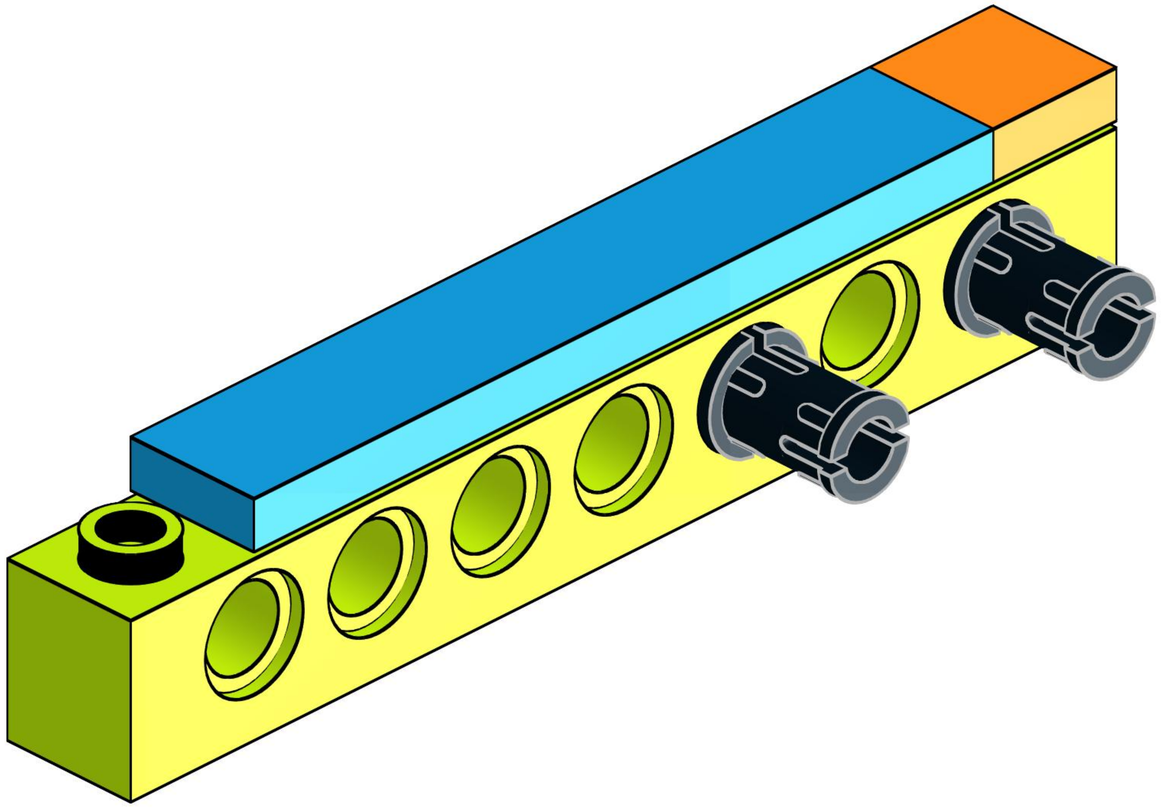

21

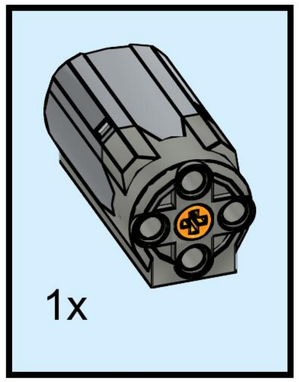

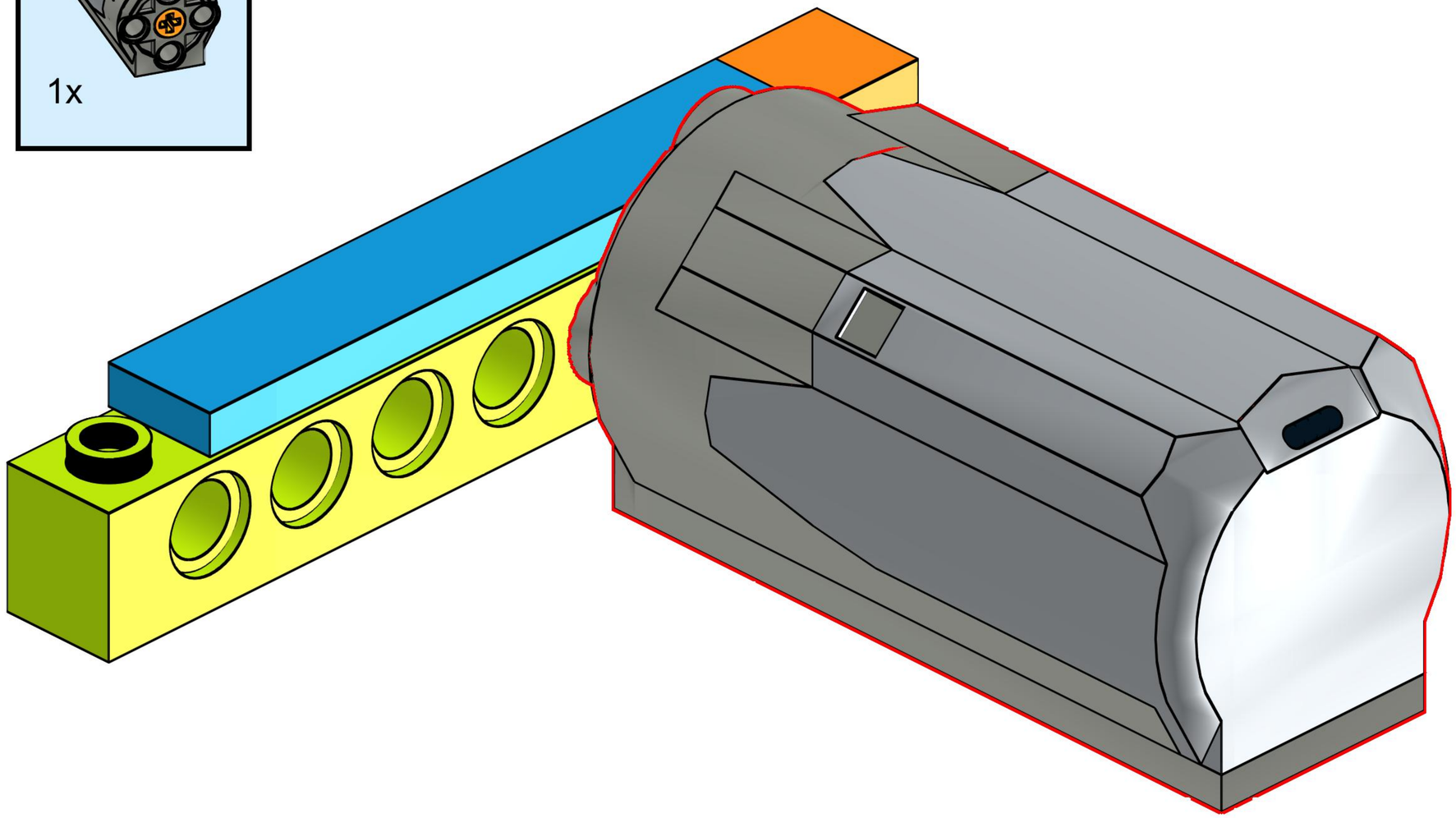

22

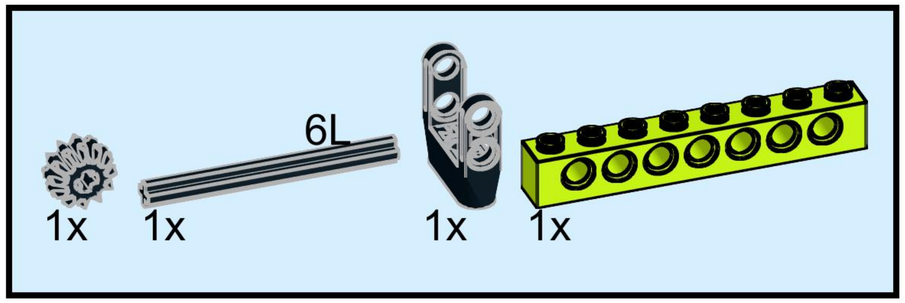

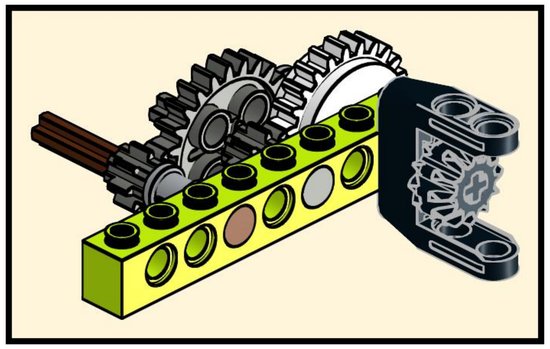

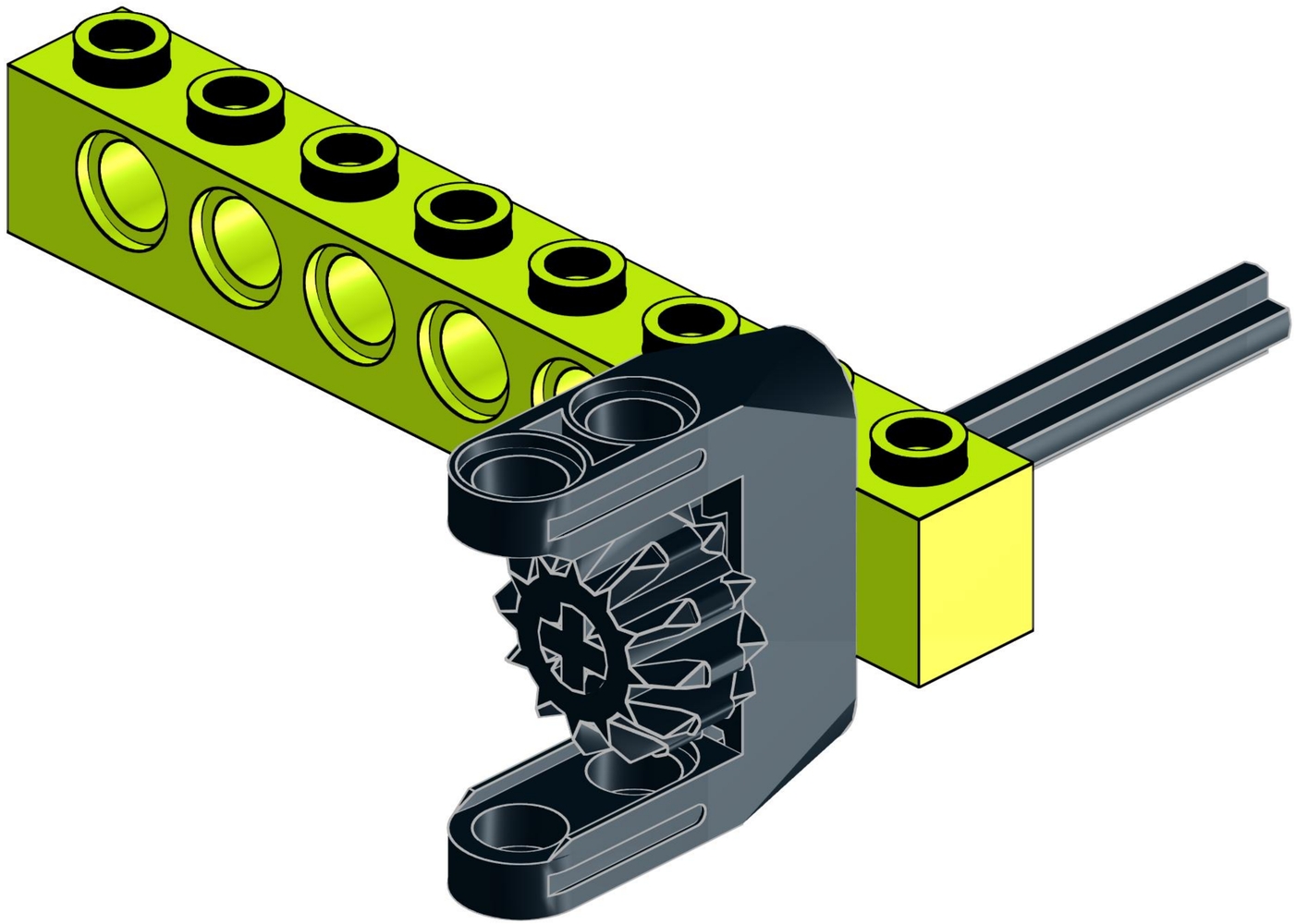

23

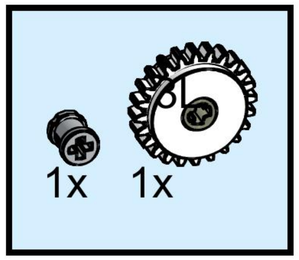

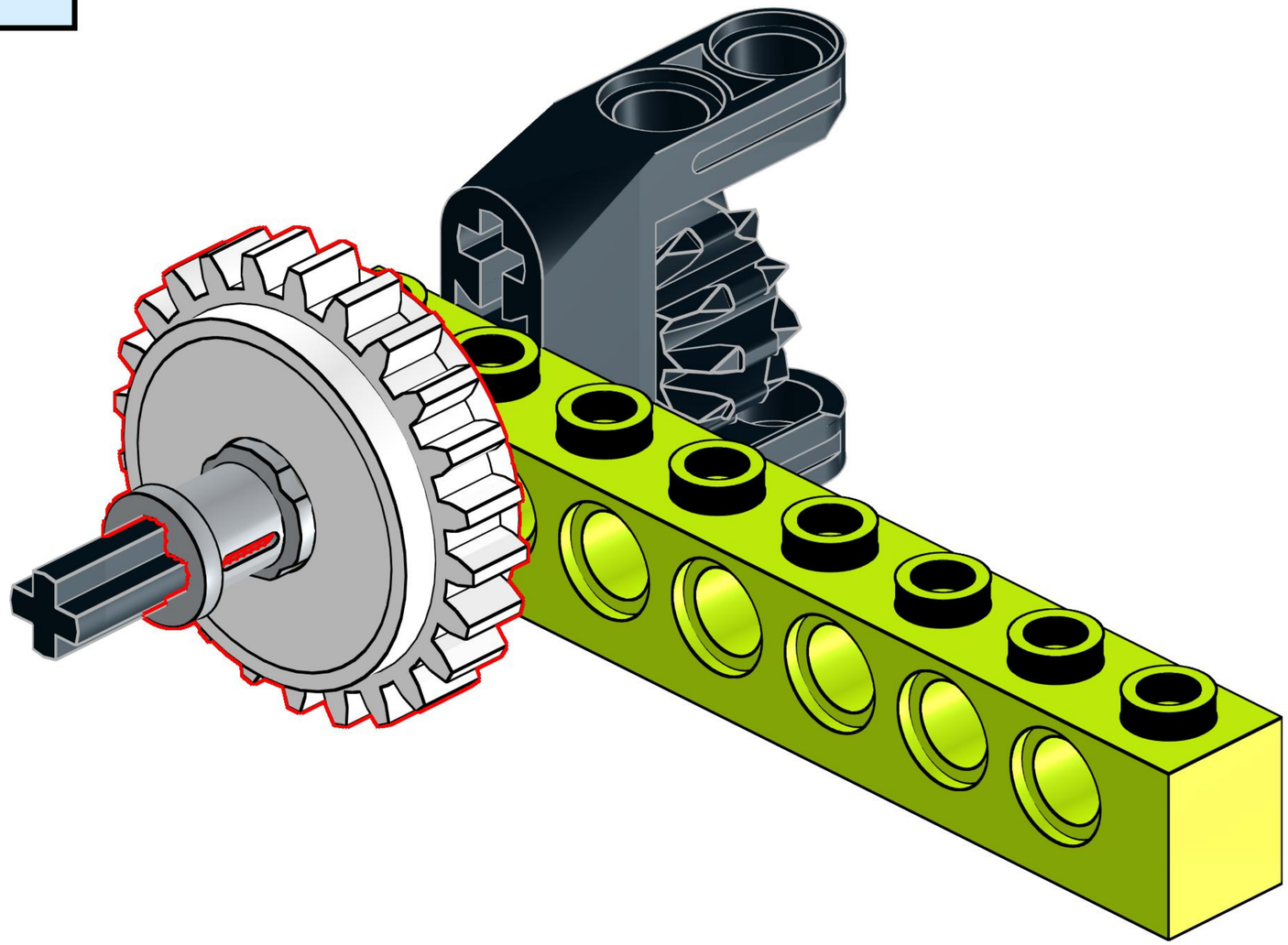

24

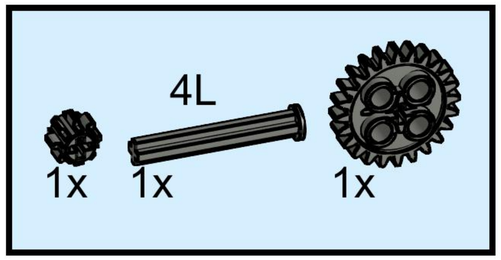

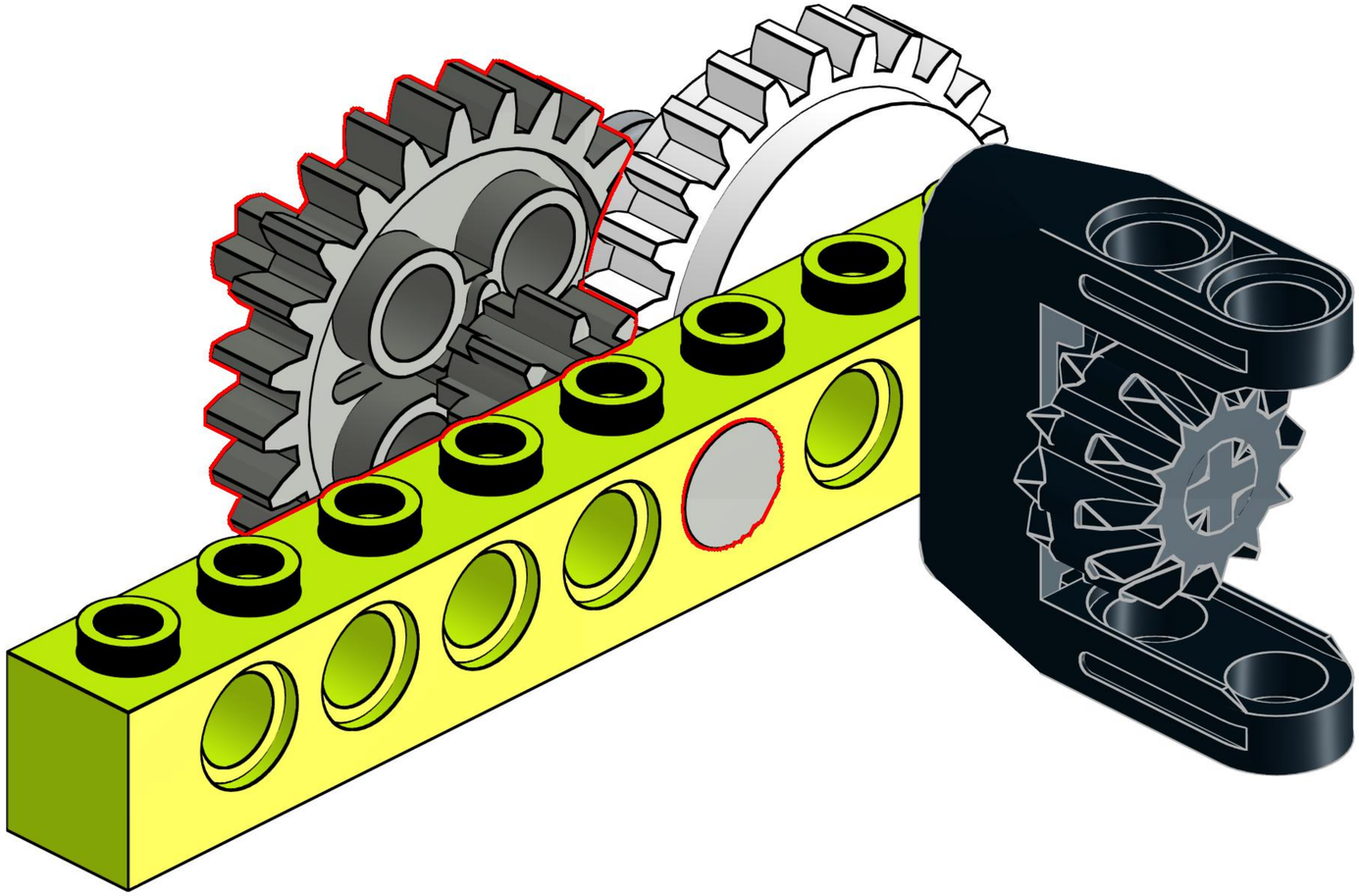

25

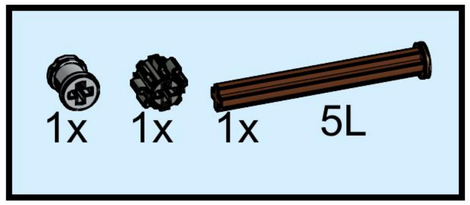

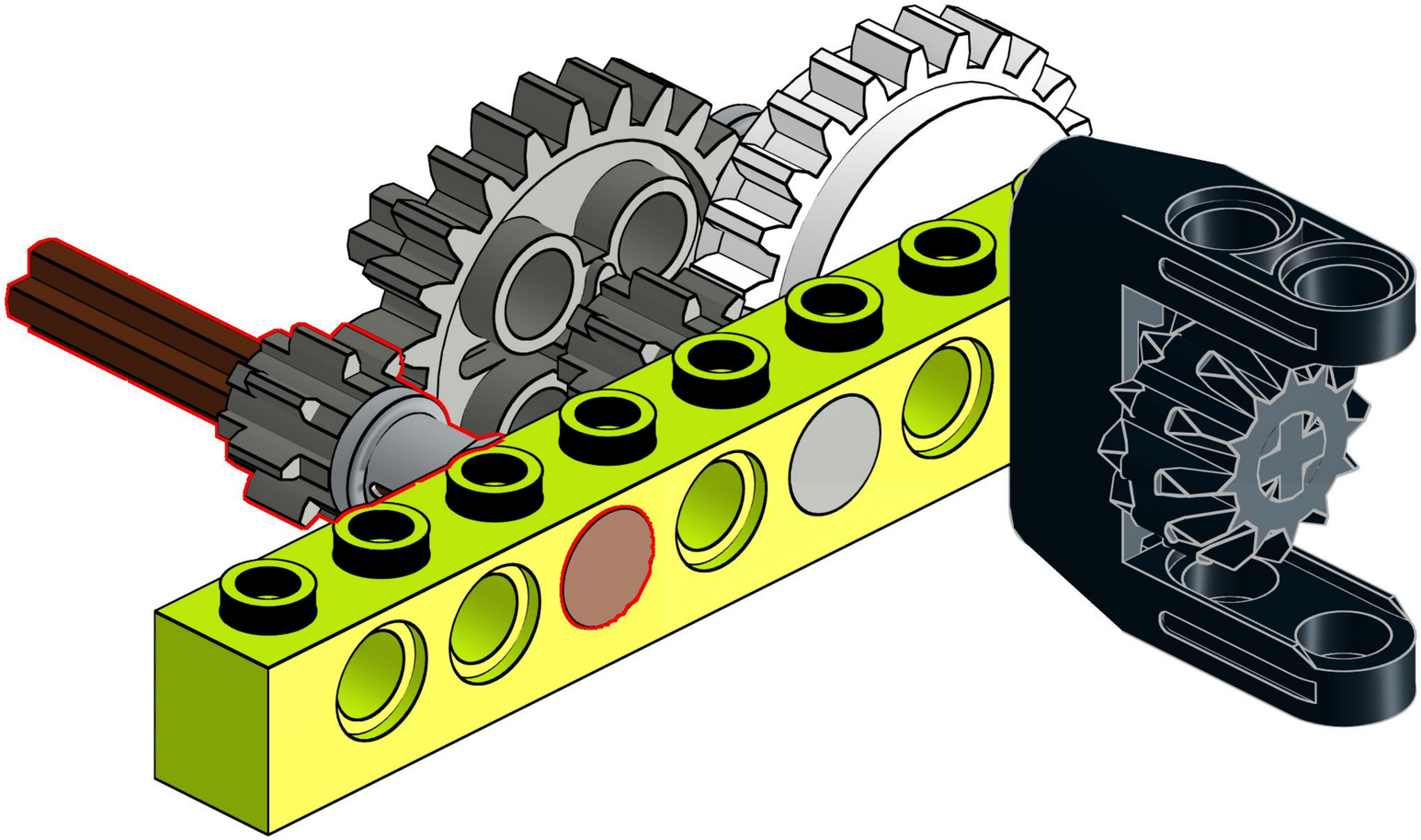

26

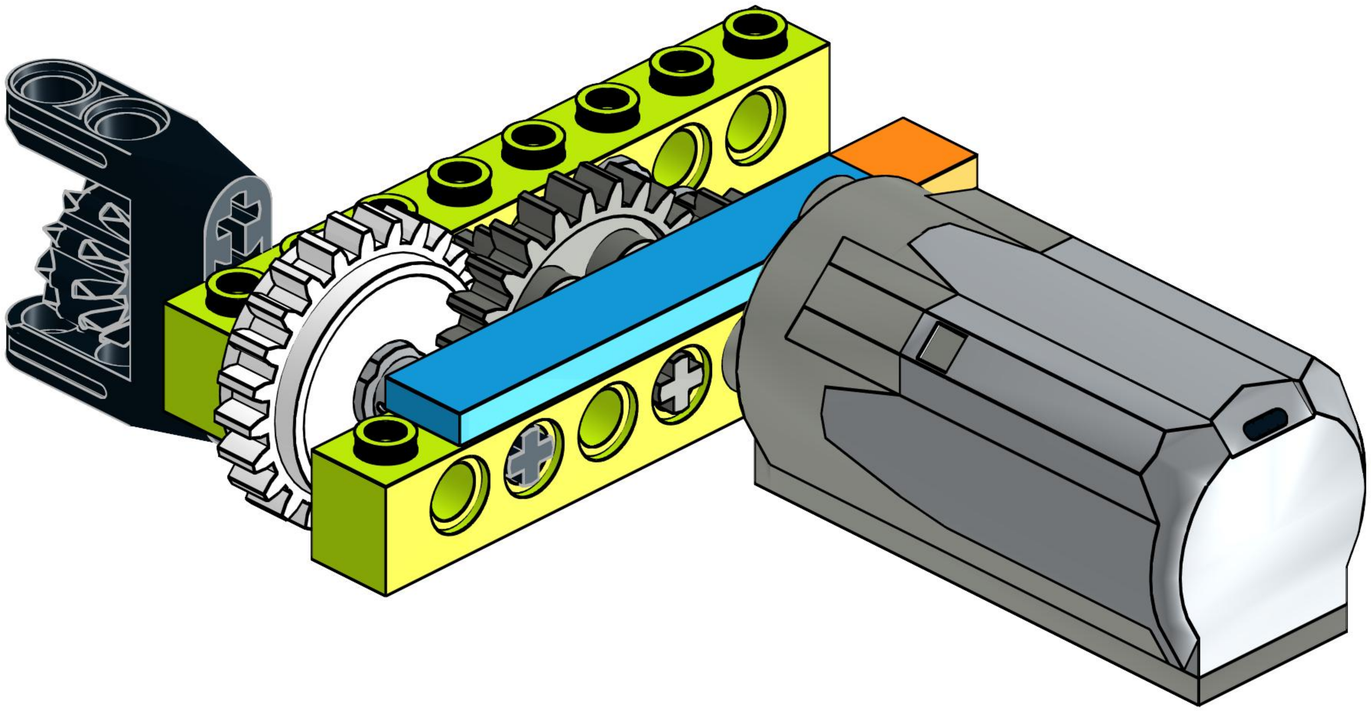

27

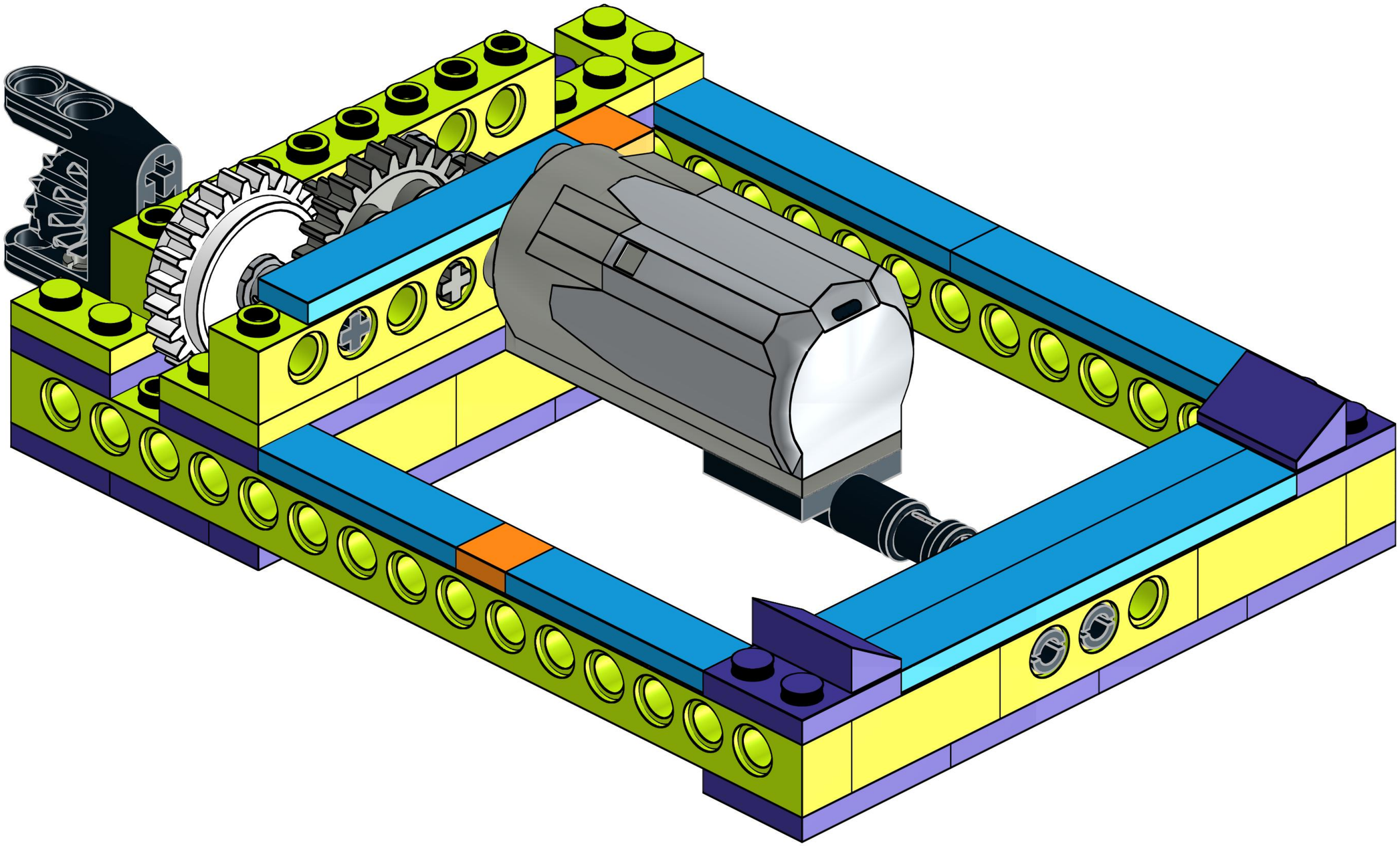

28

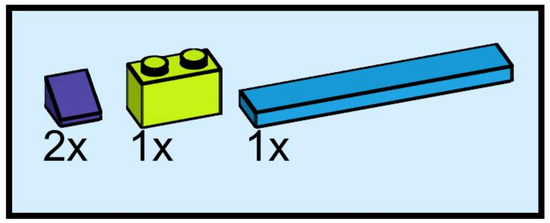

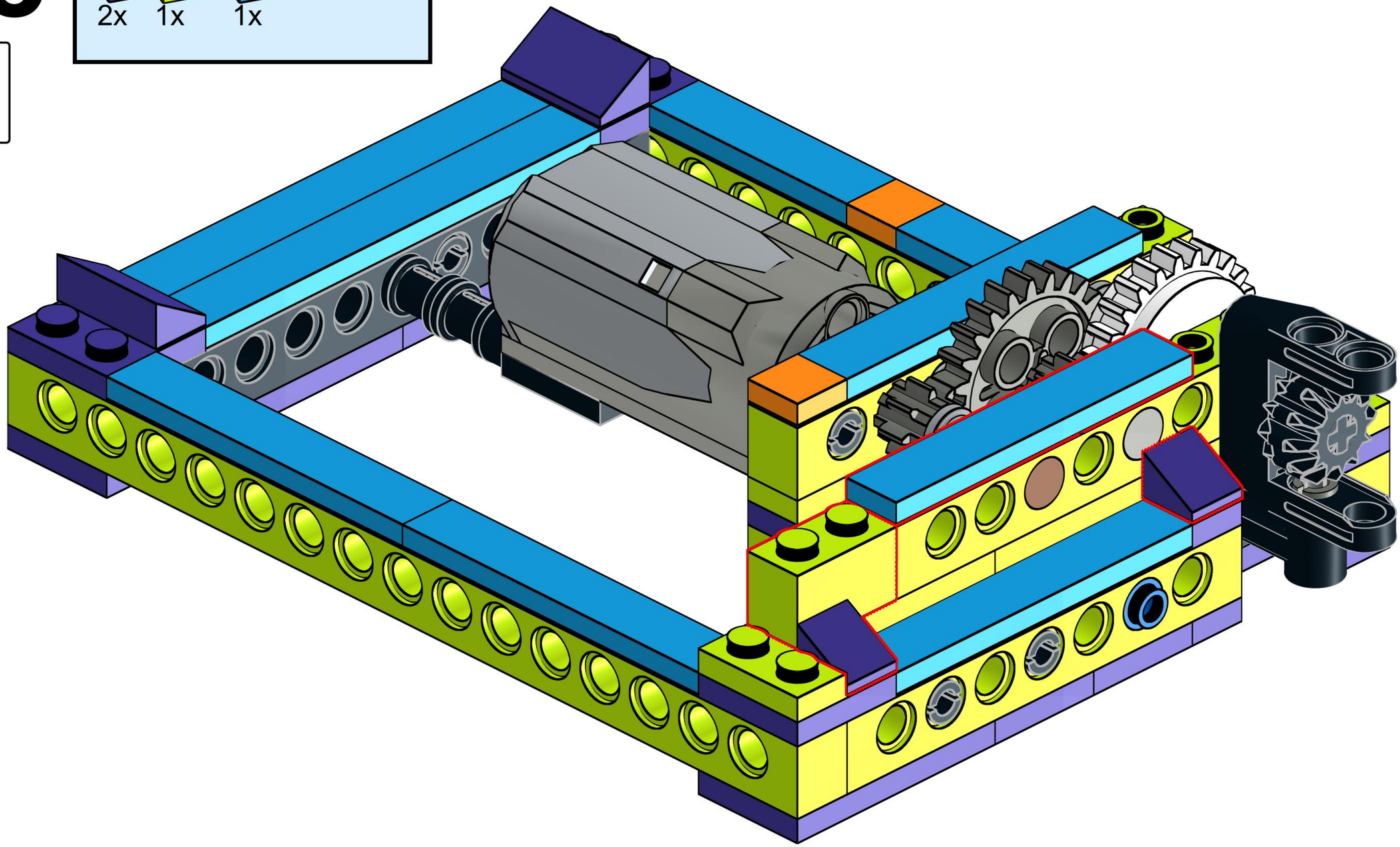

29

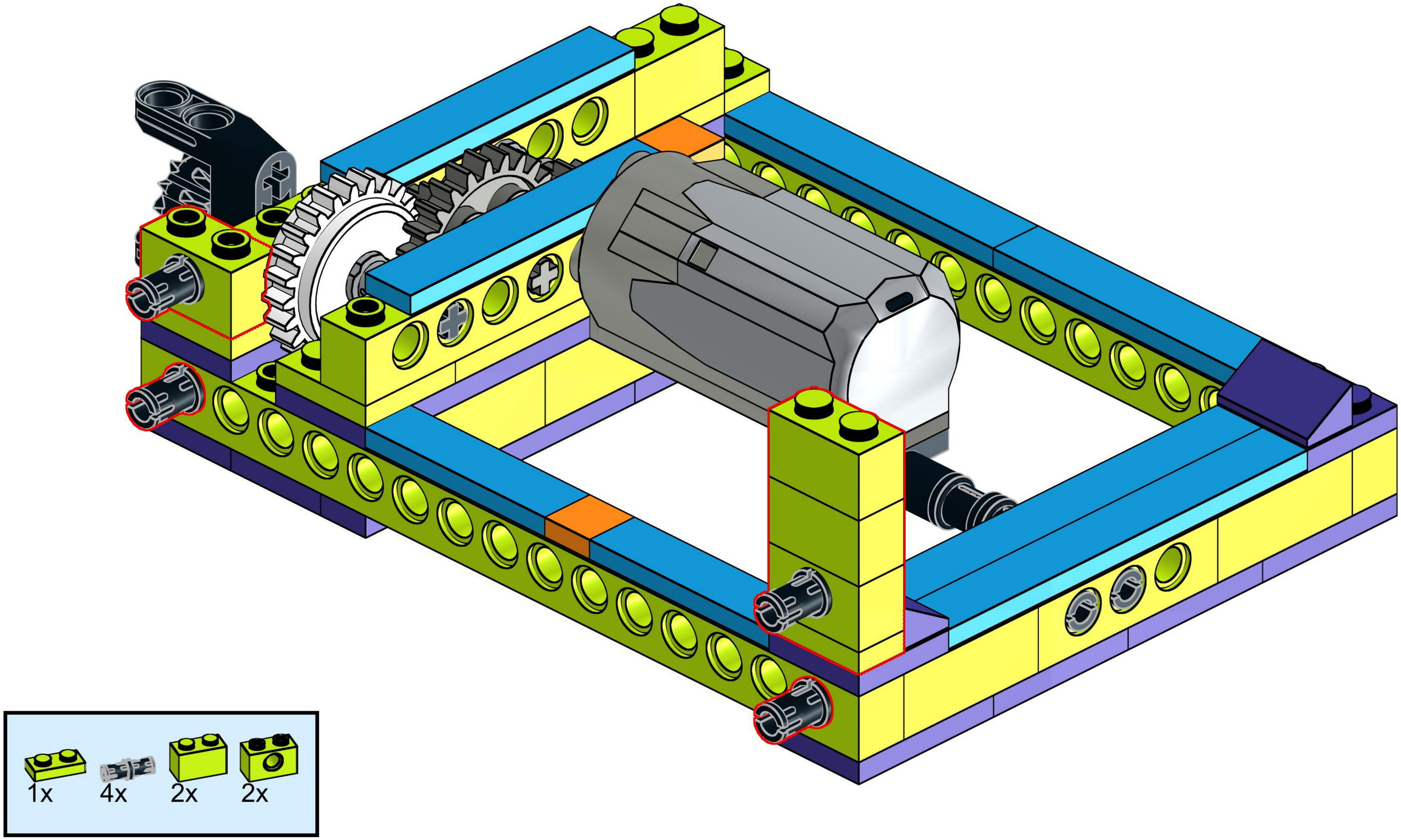

30

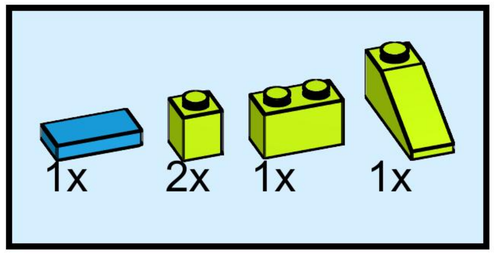

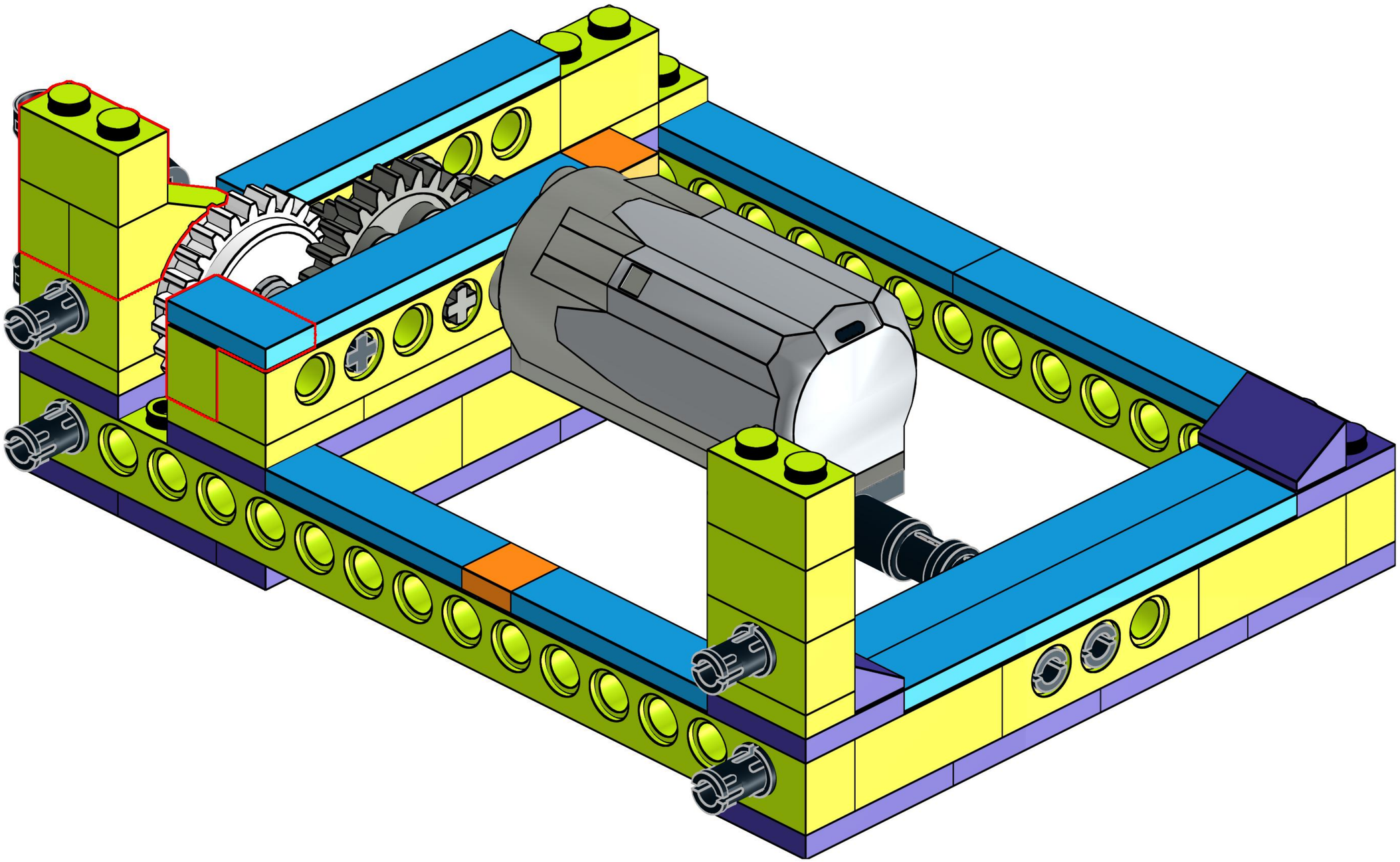

31

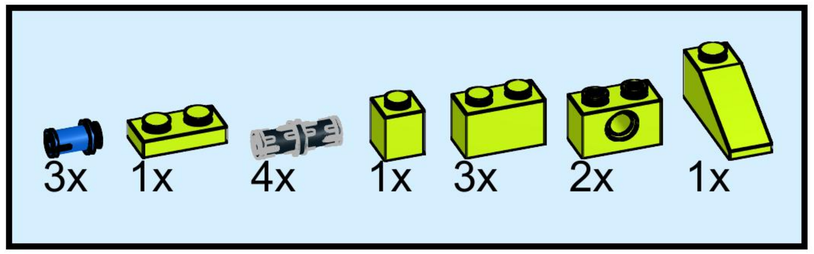

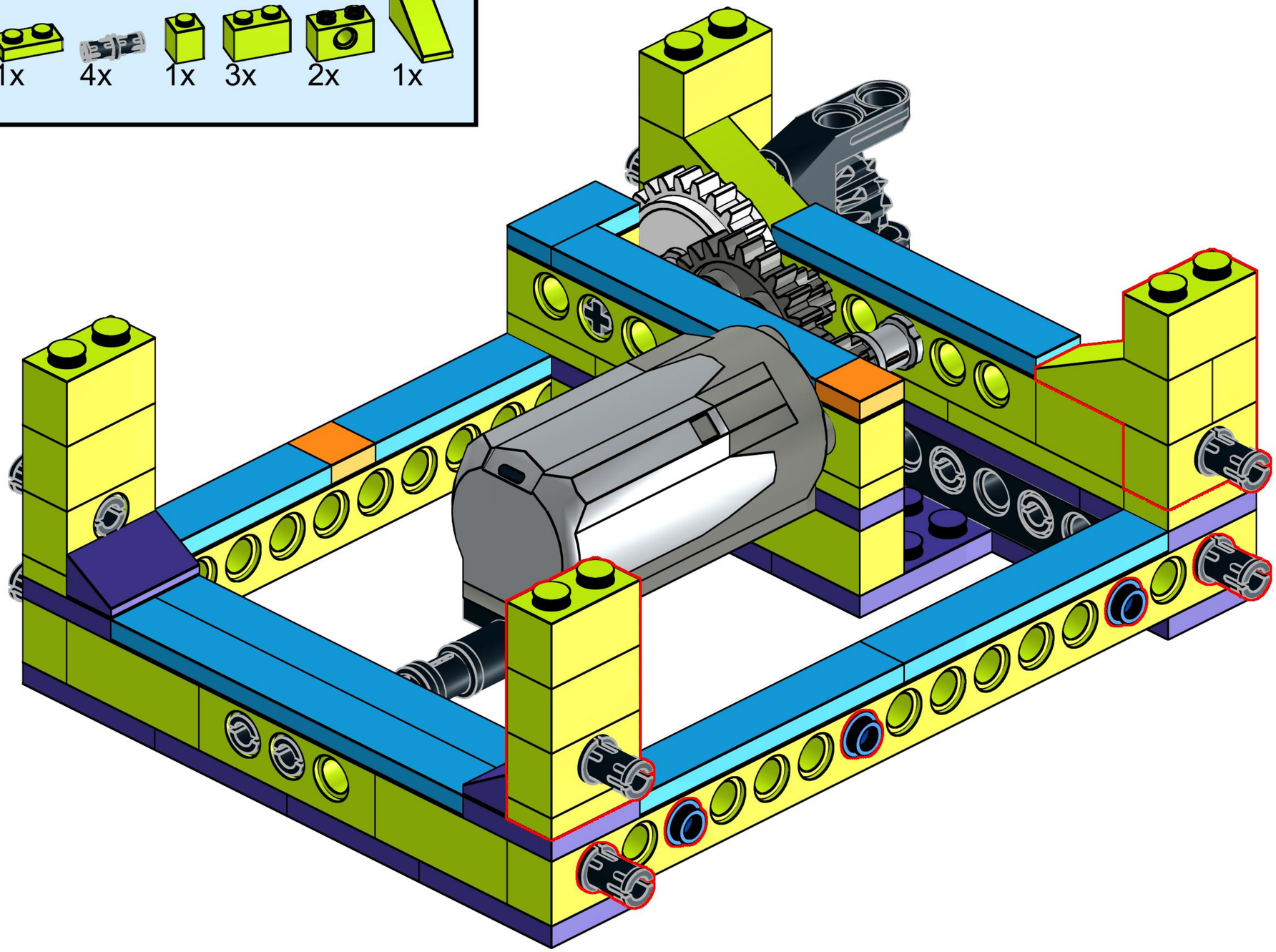

My dream is that everyone would treat animals with kindness. - Mia

32

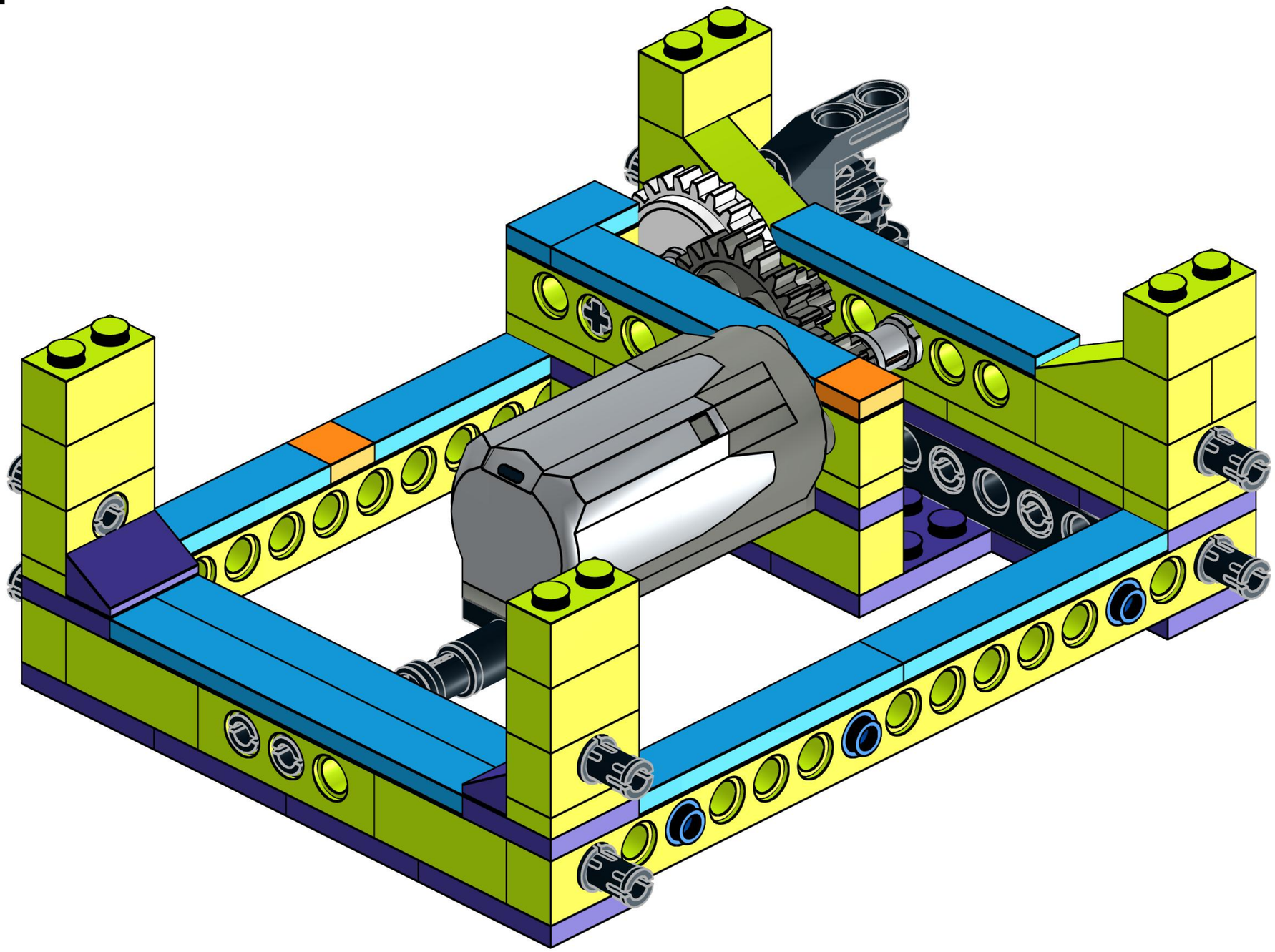

Set aside for later.

33

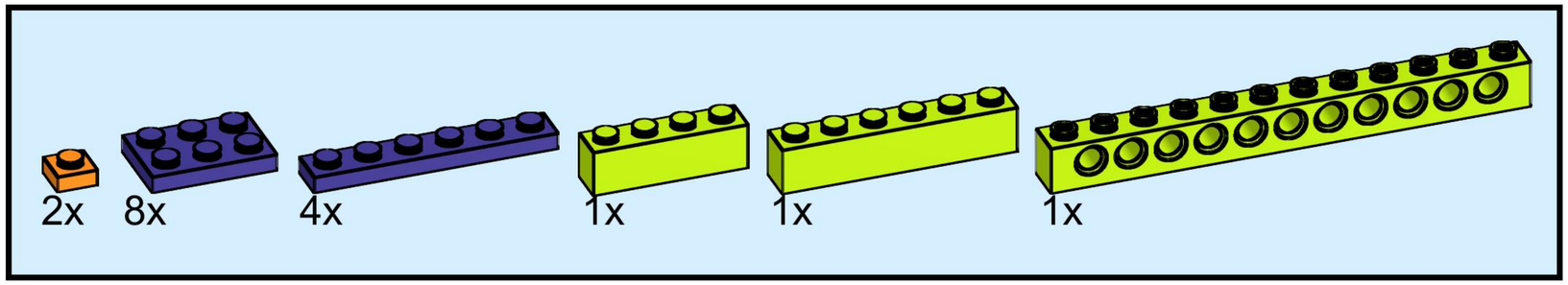

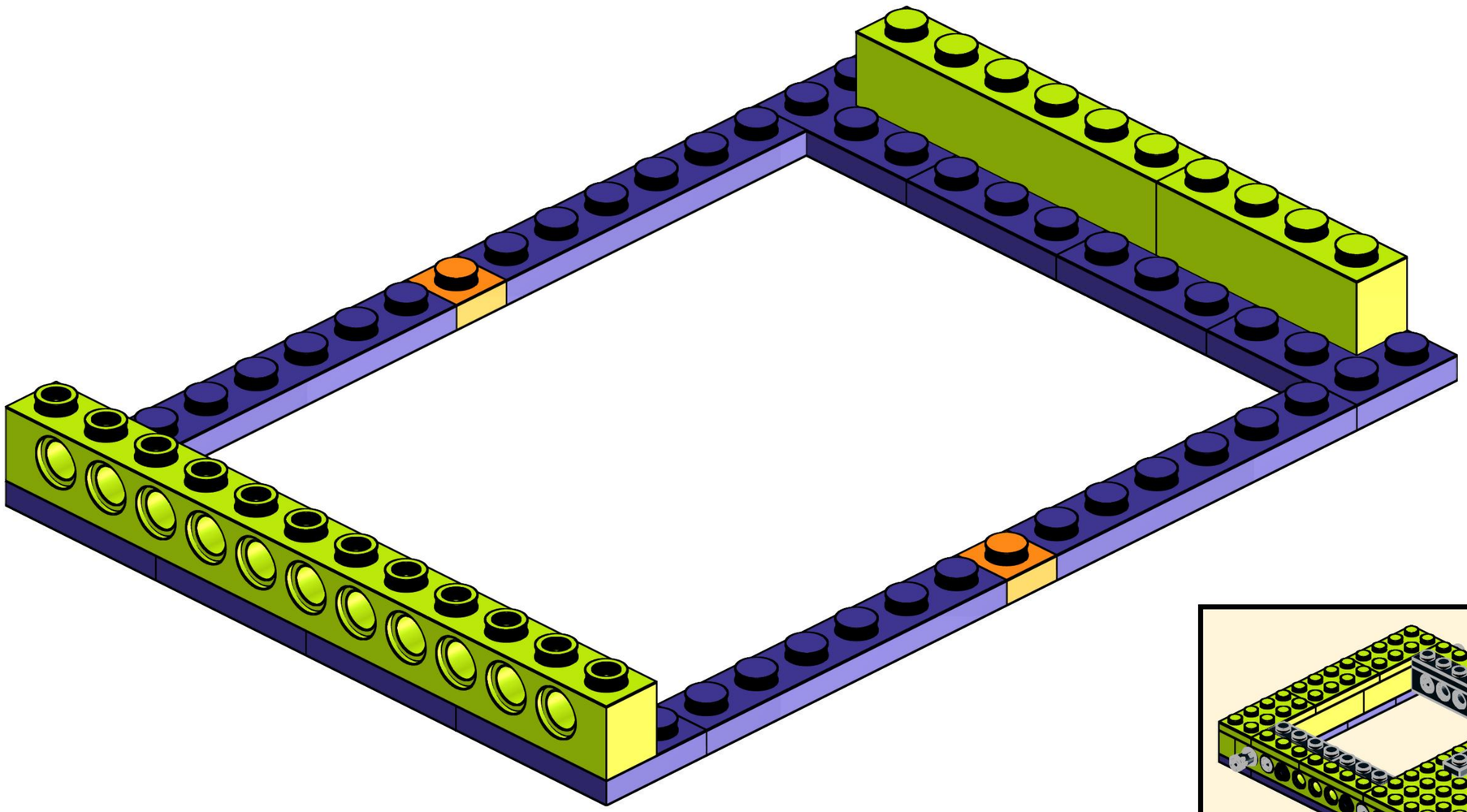

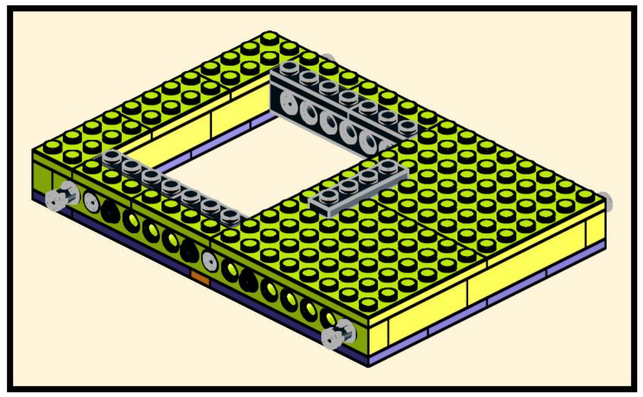

34

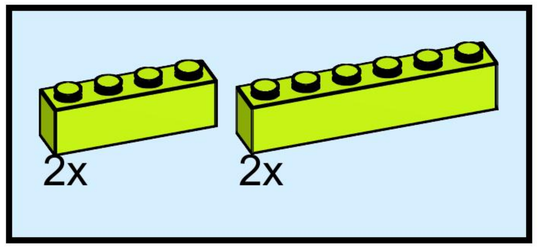

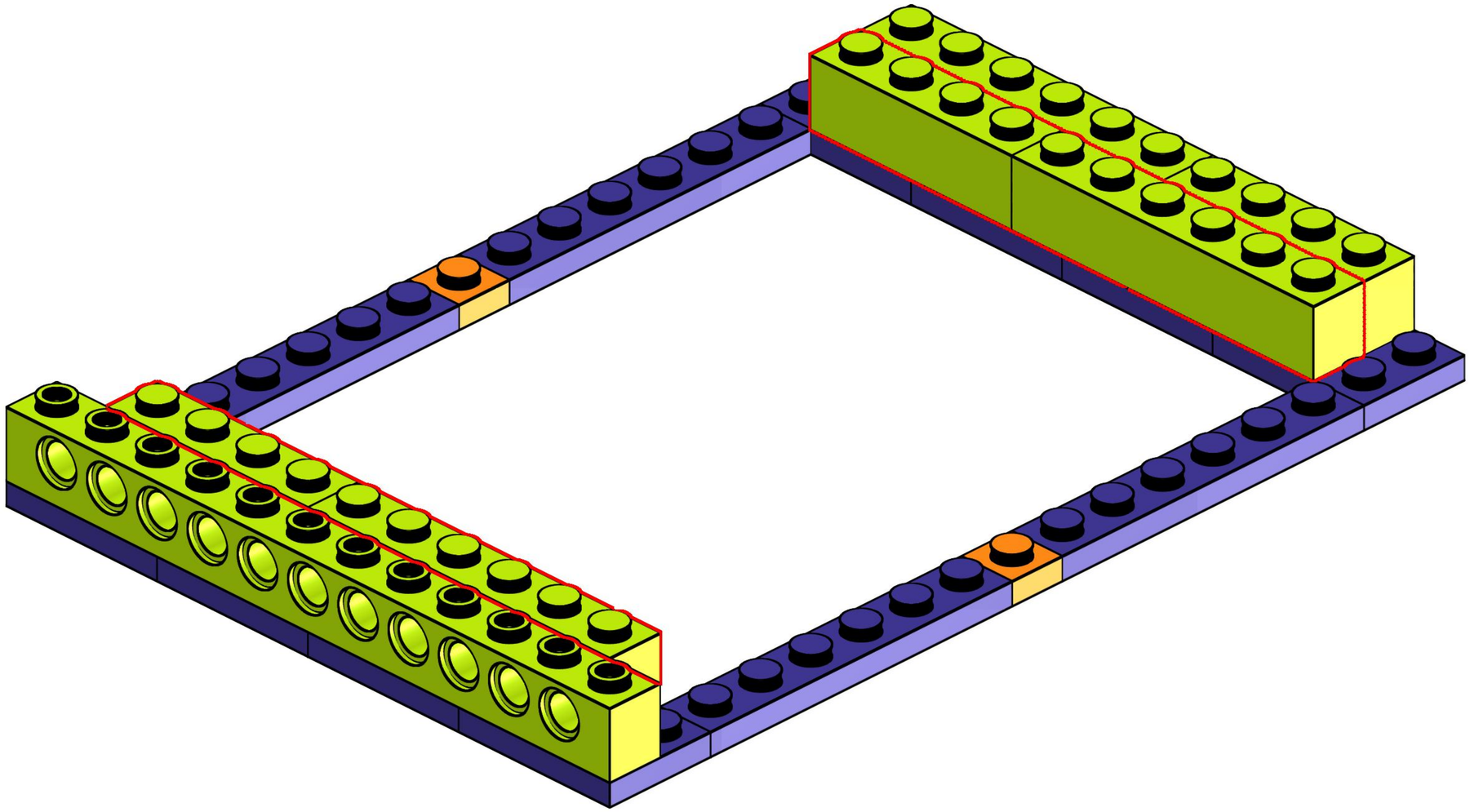

35

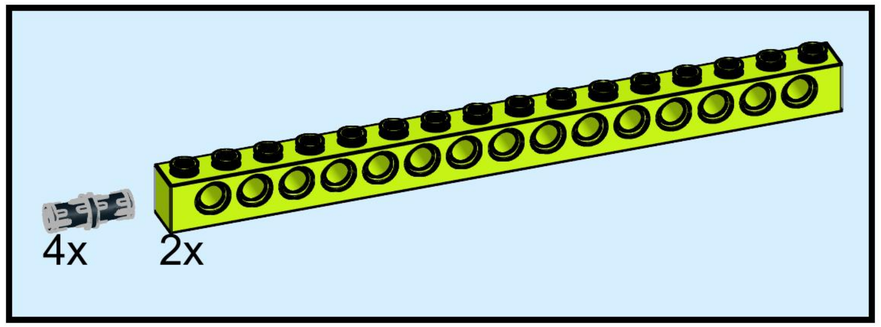

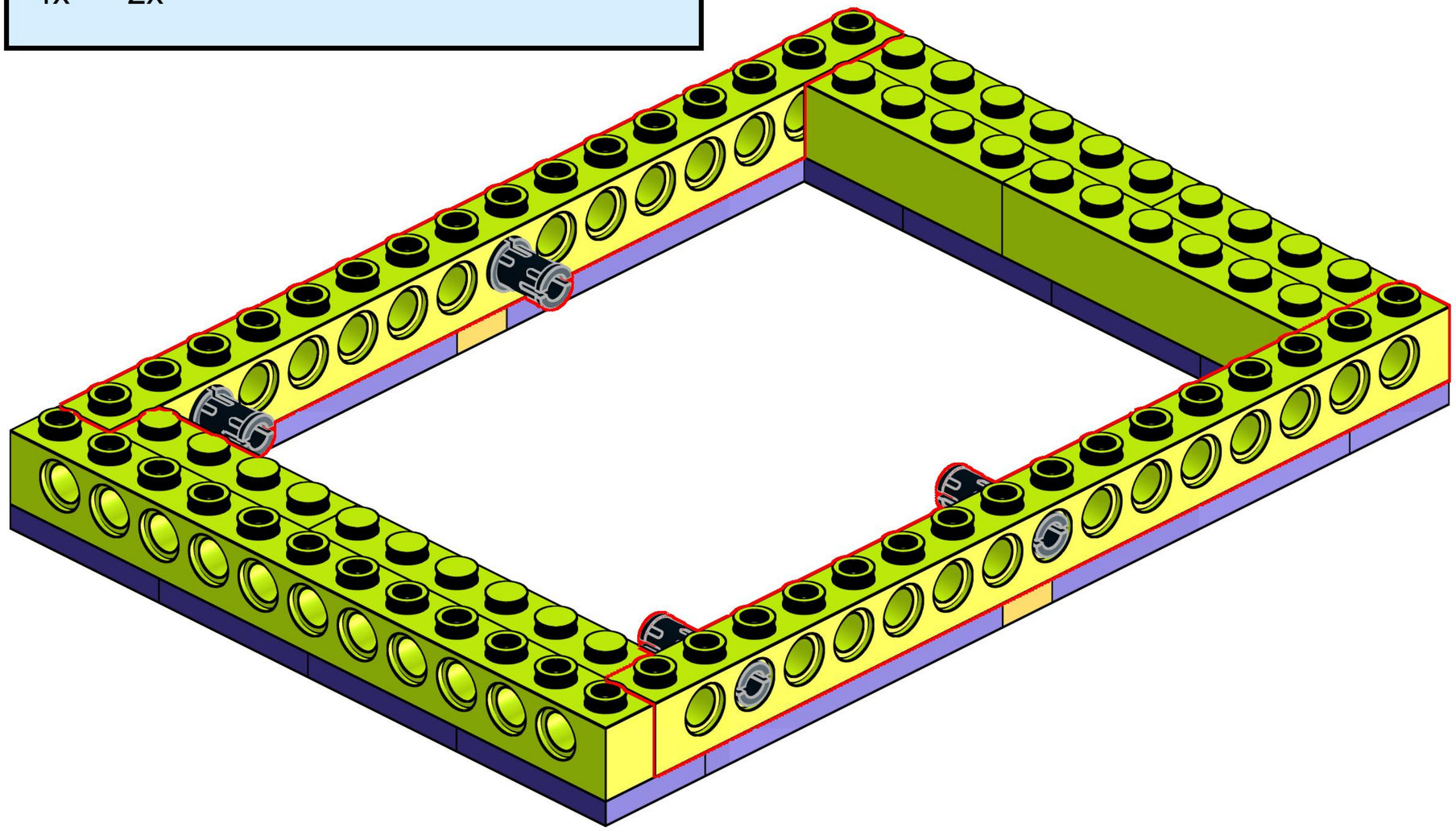

36

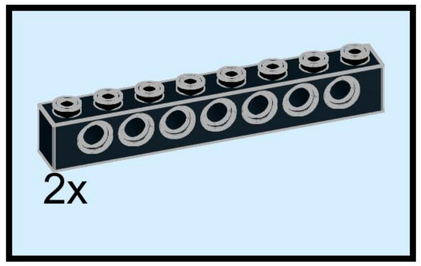

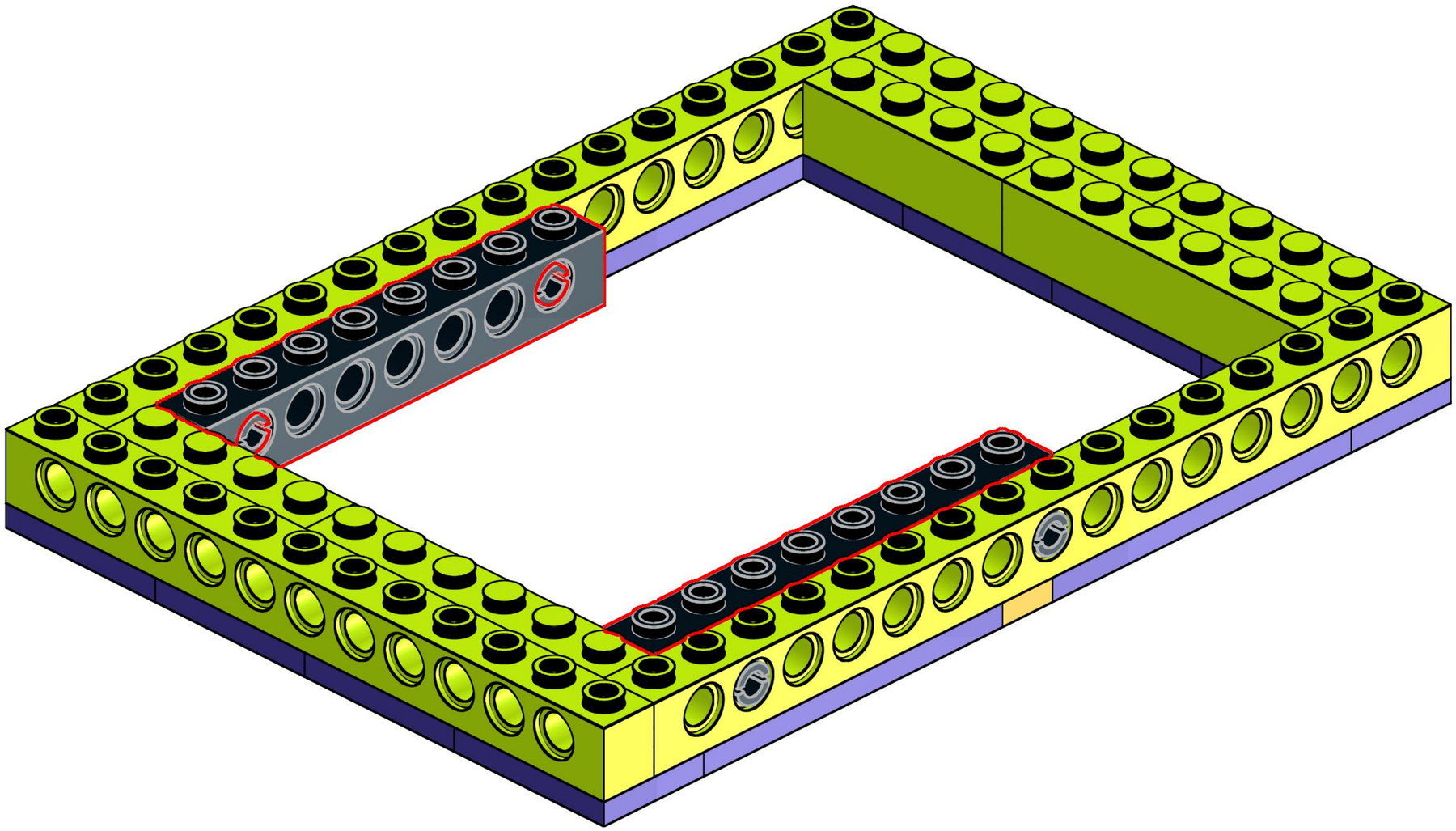

37

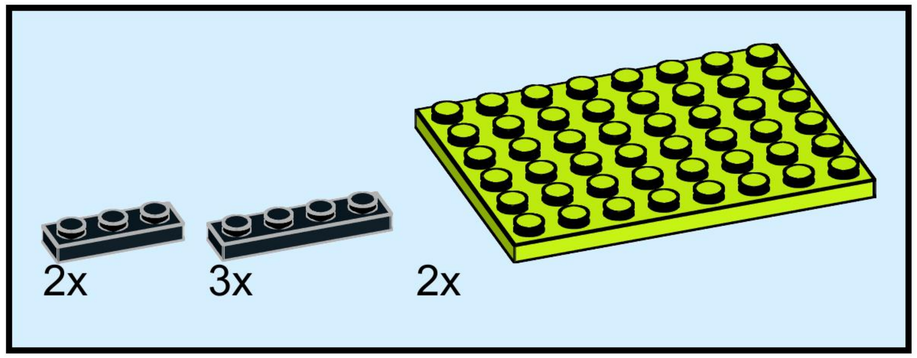

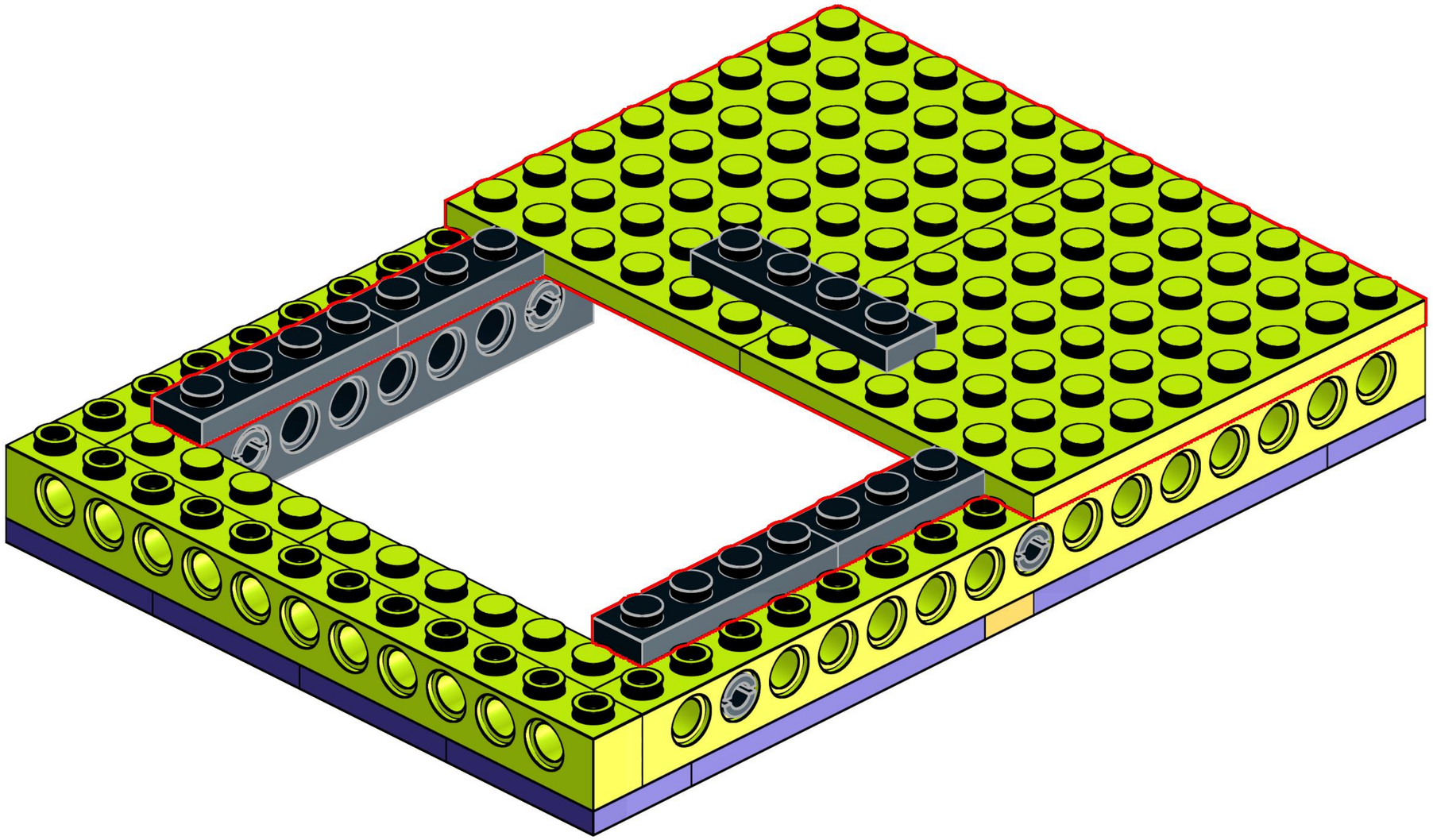

38

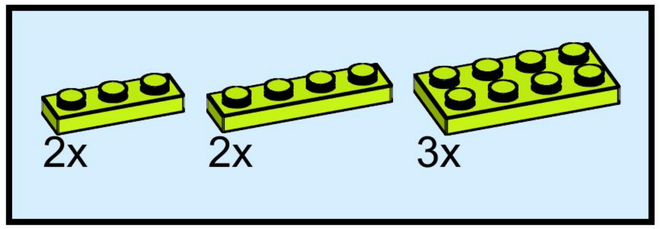

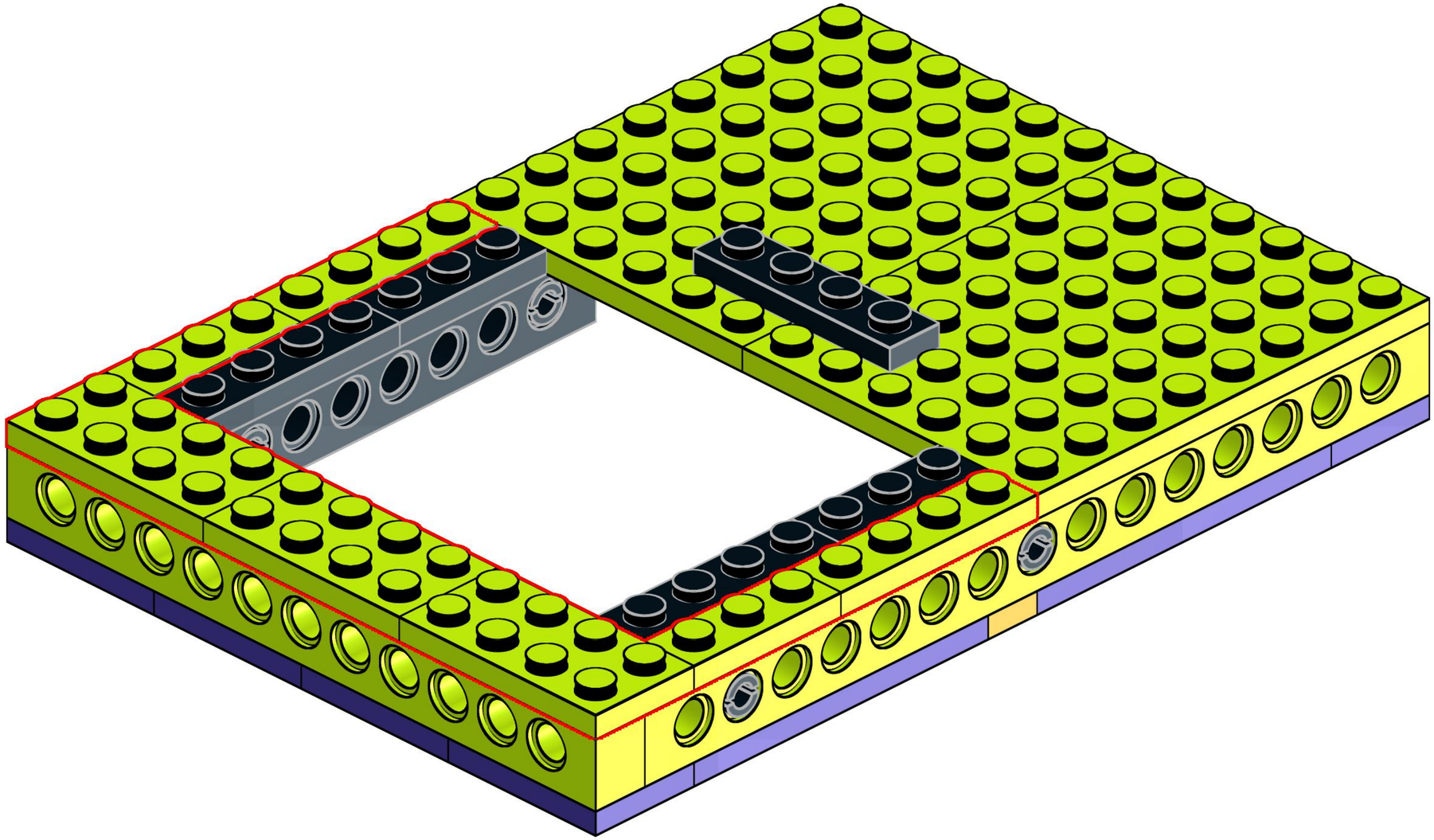

39

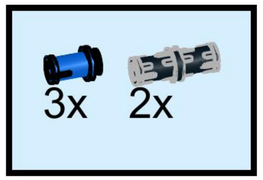

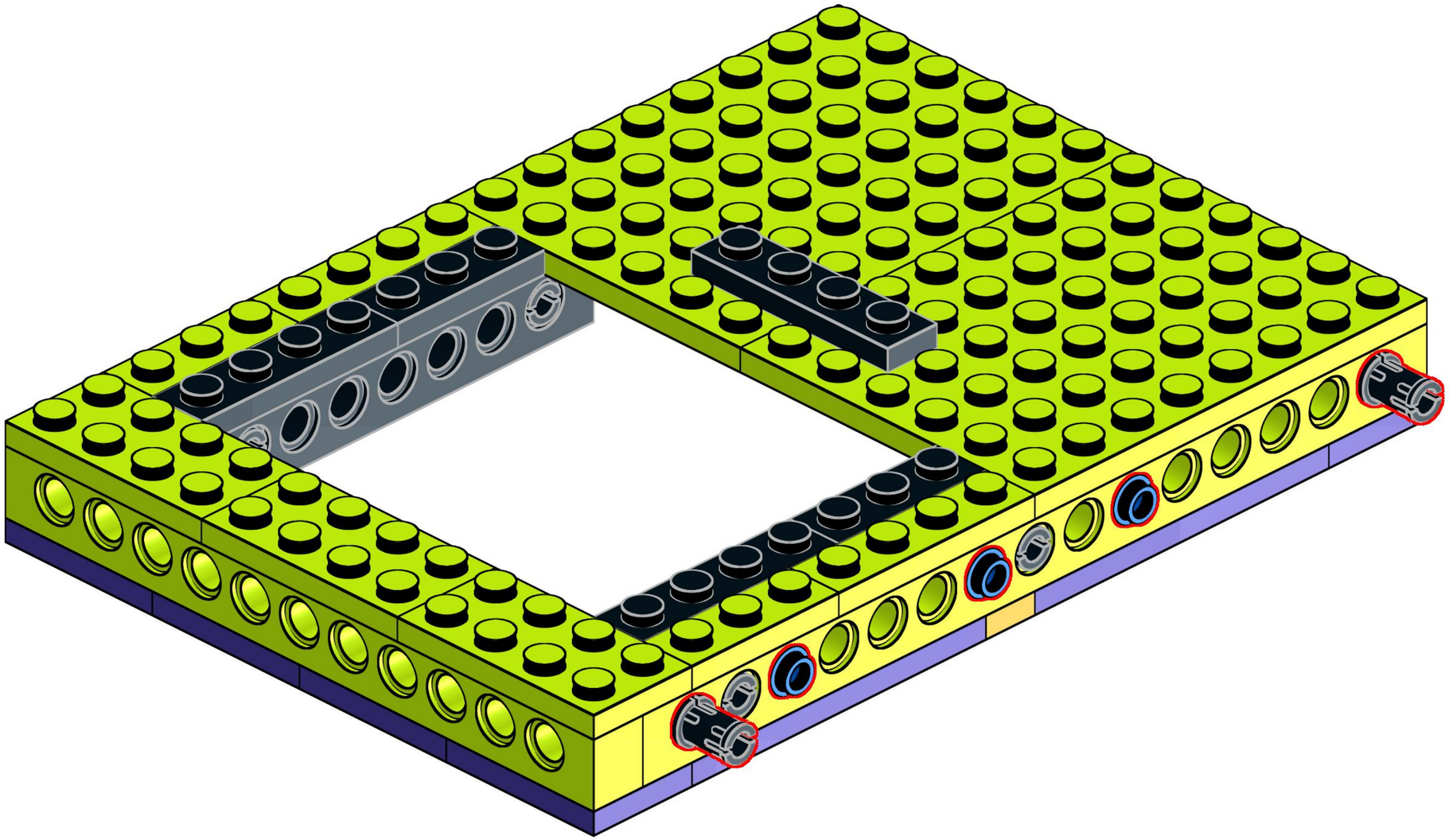

40

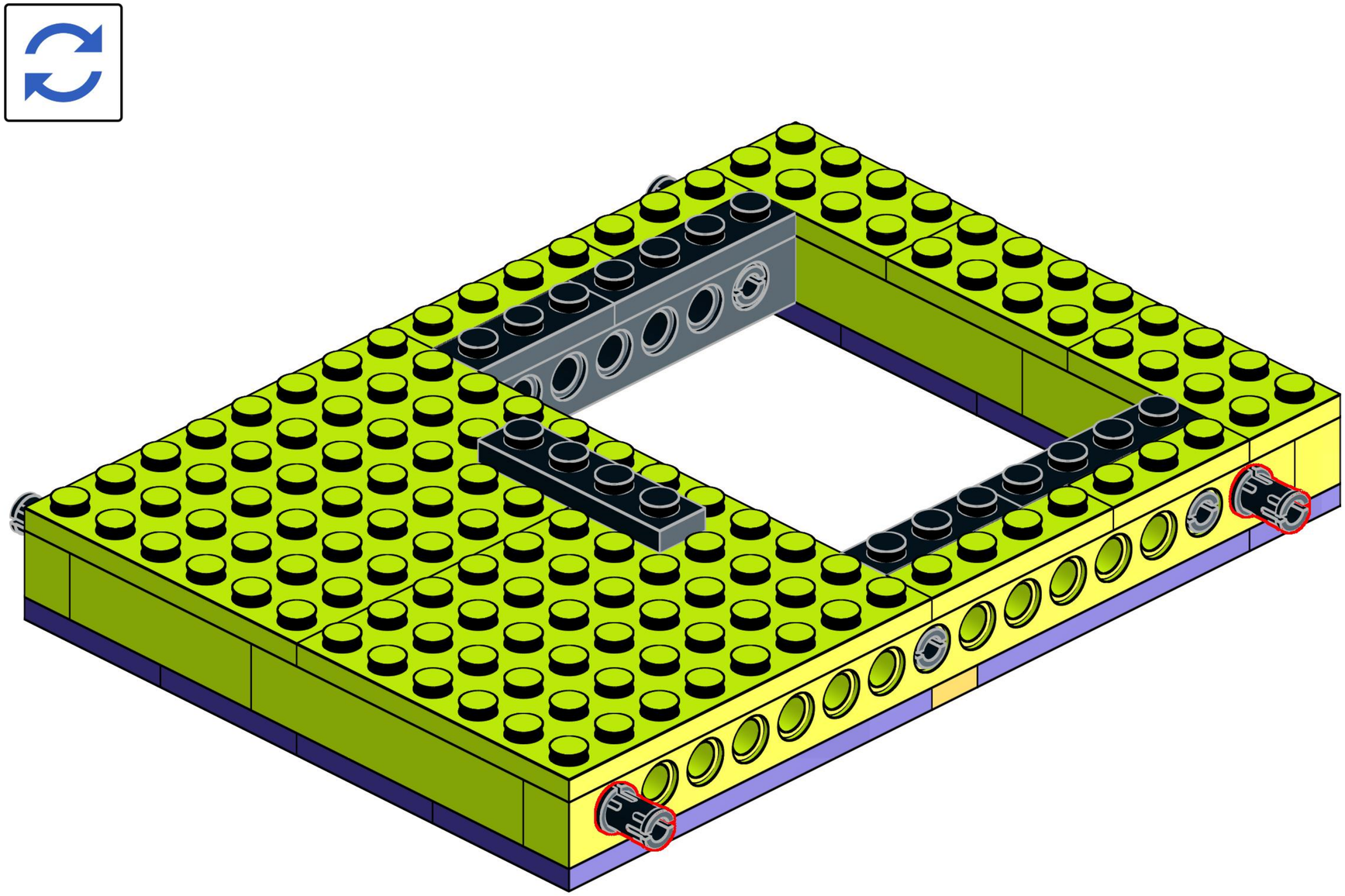

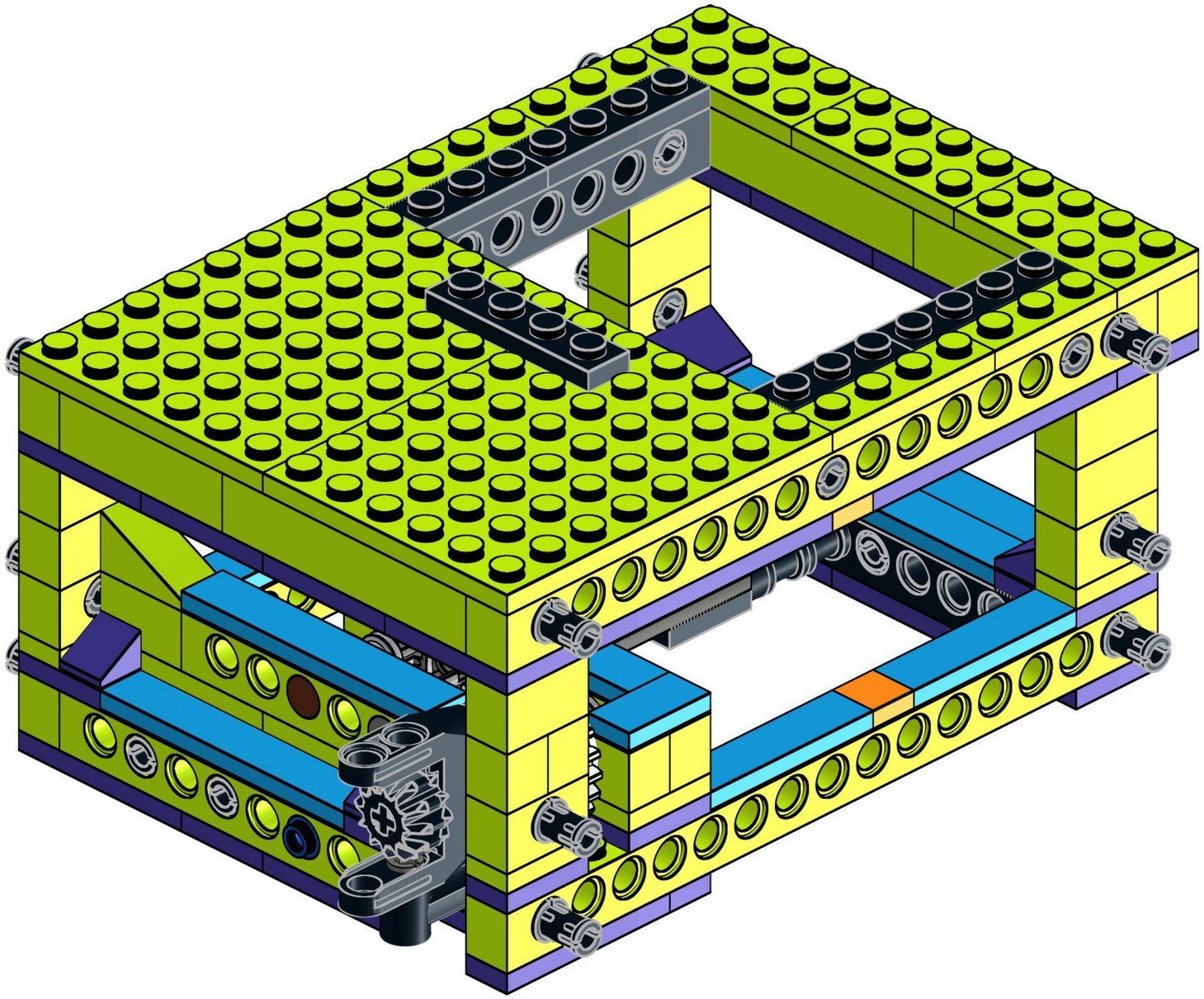

You need to be a friend, to have a friend. - Mia

42

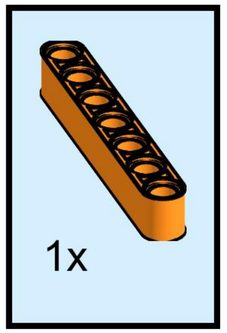

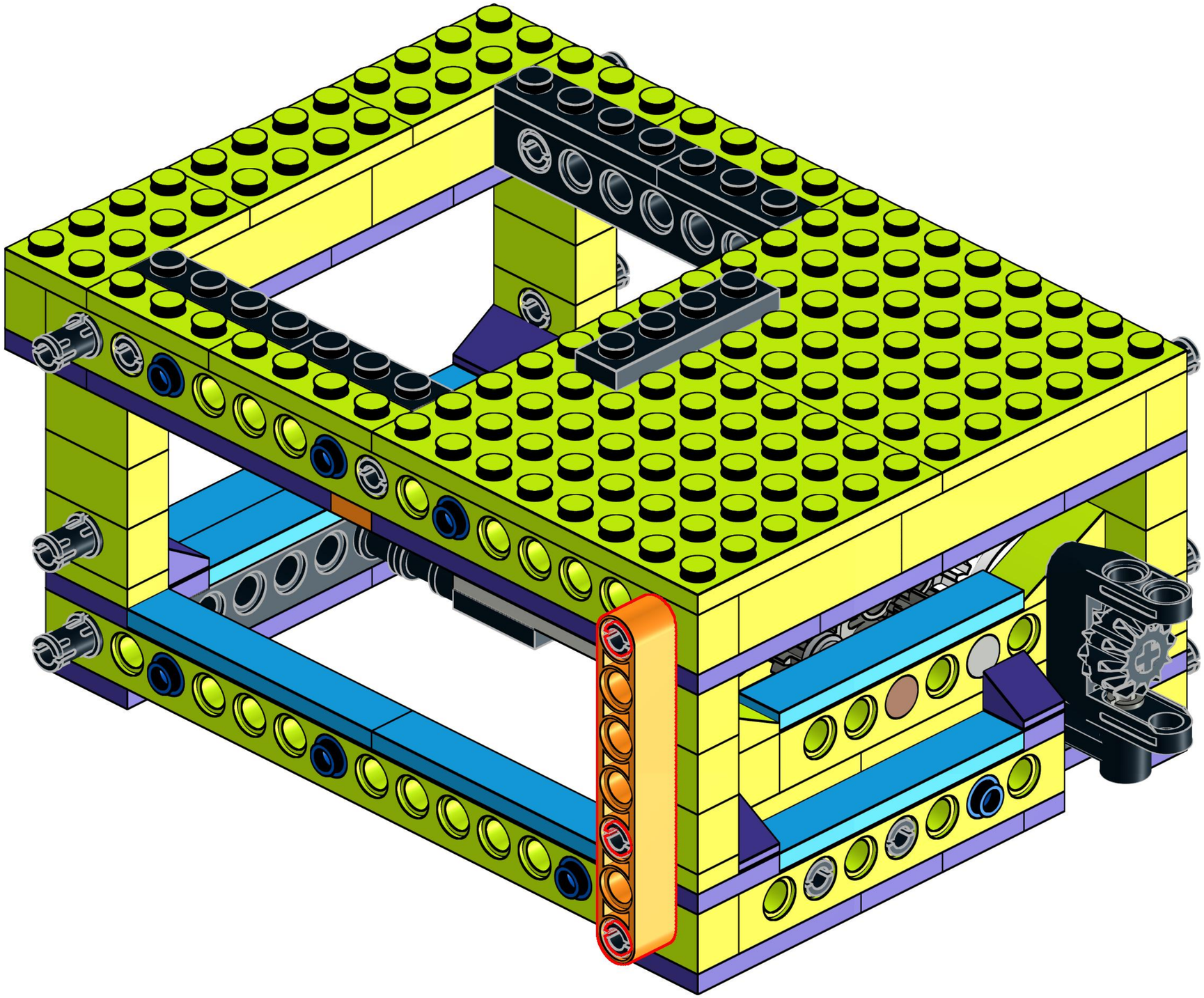

43

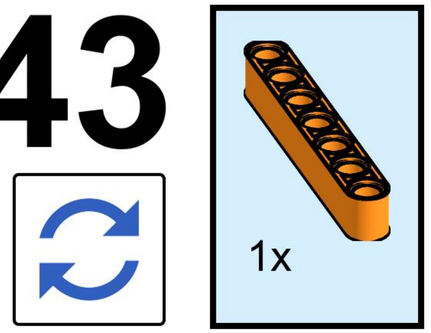

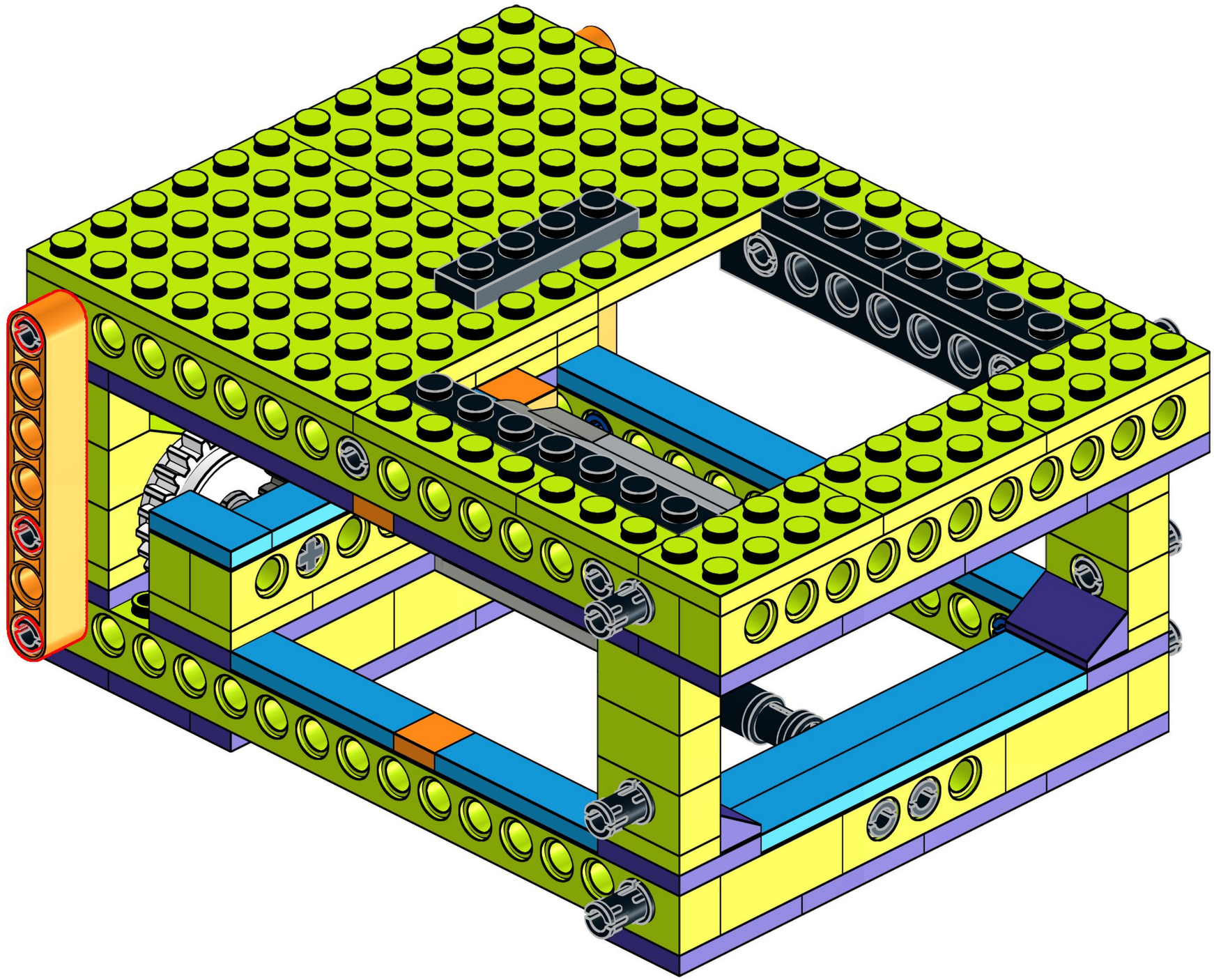

44

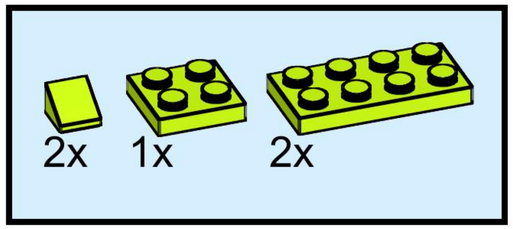

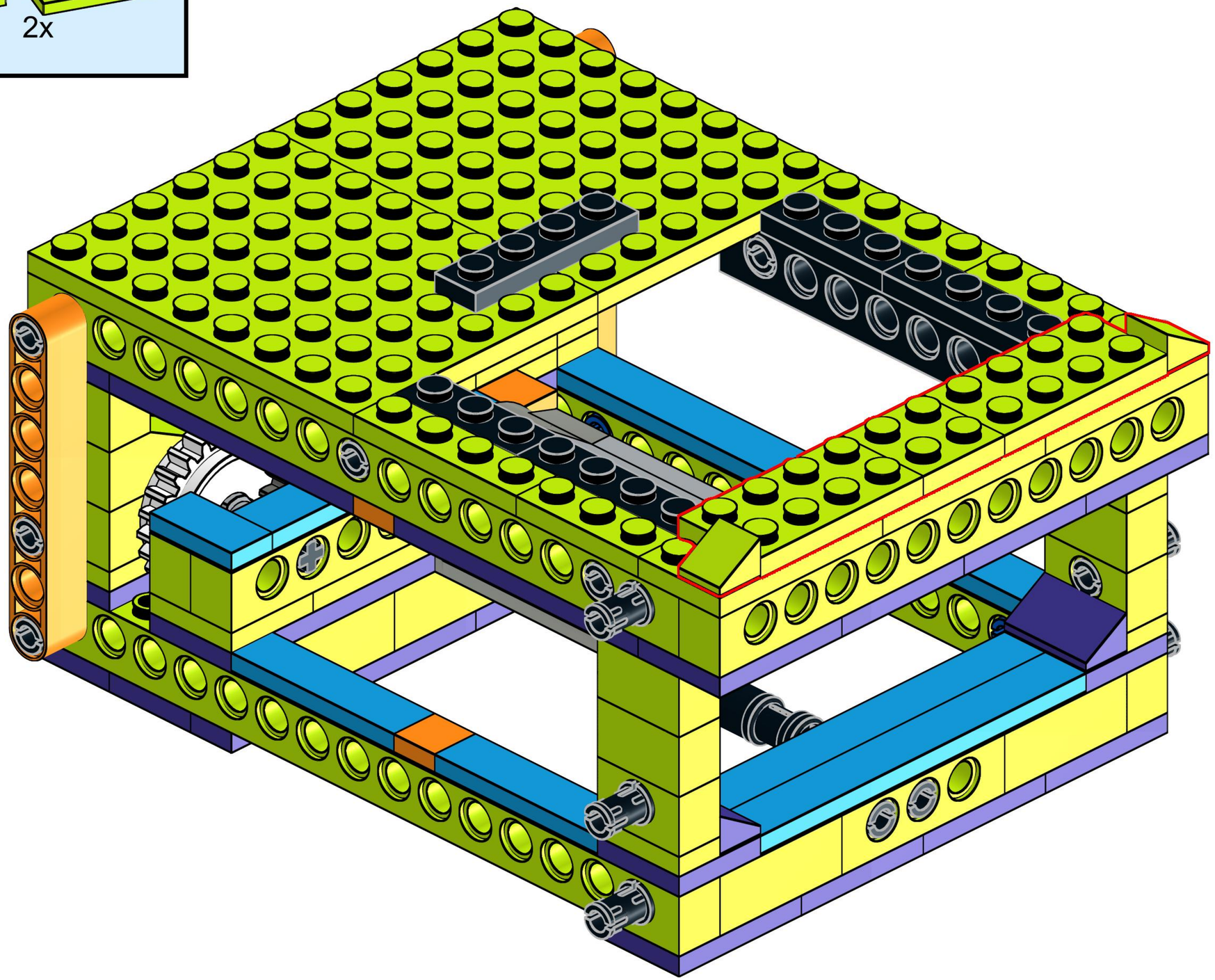

45

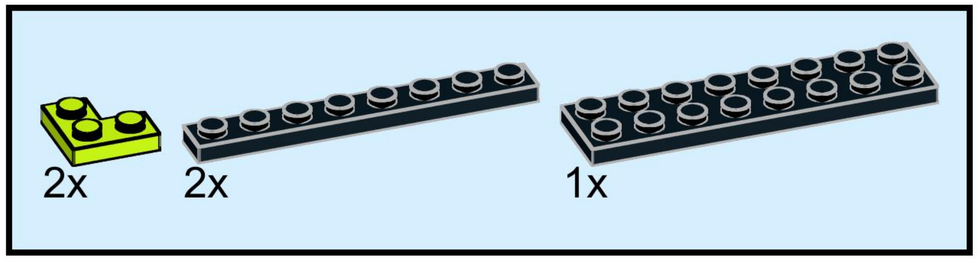

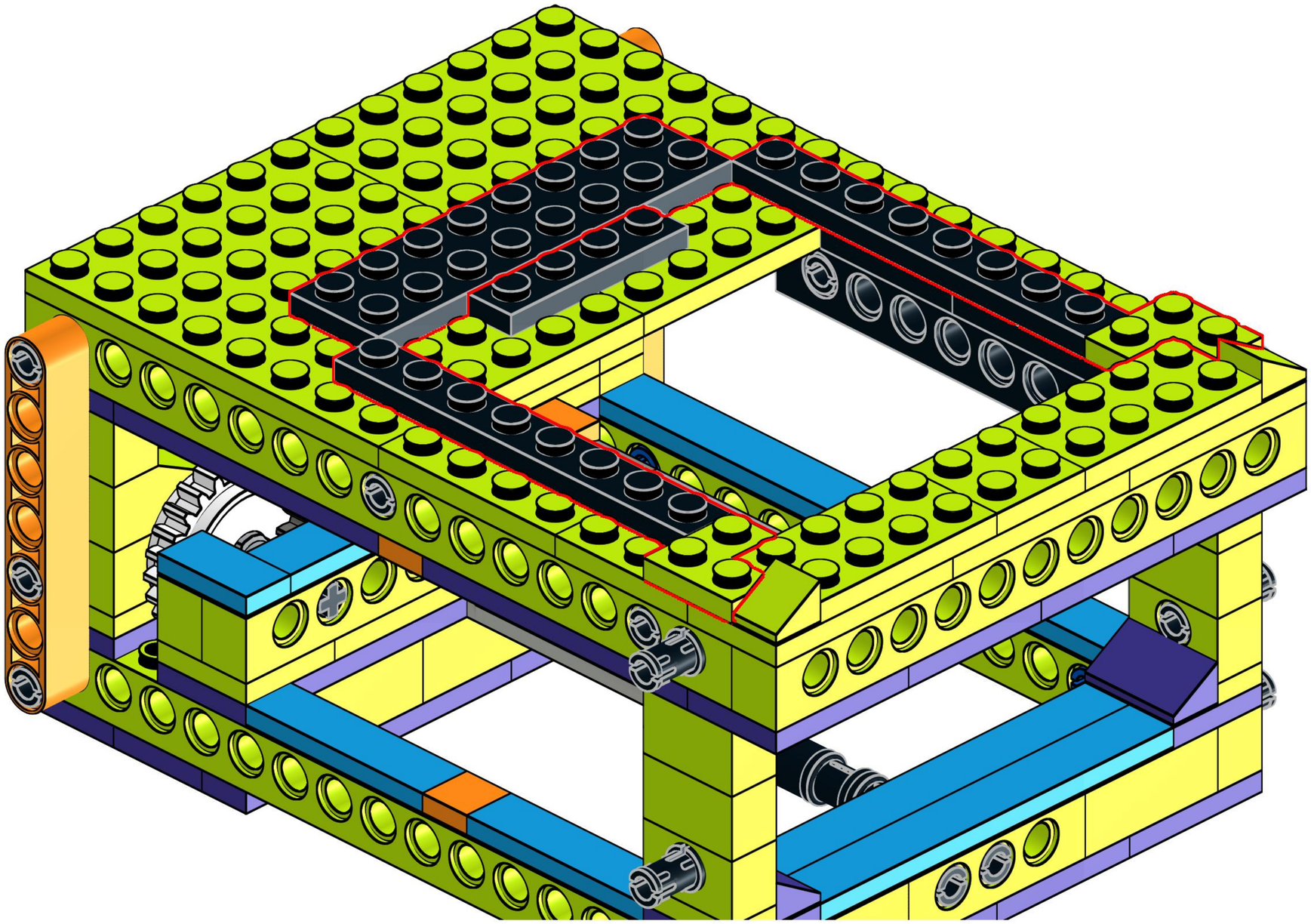

46

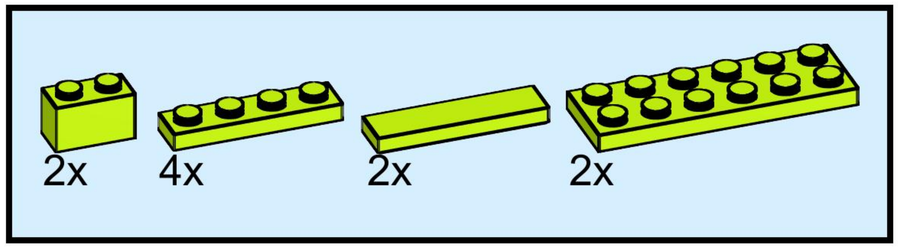

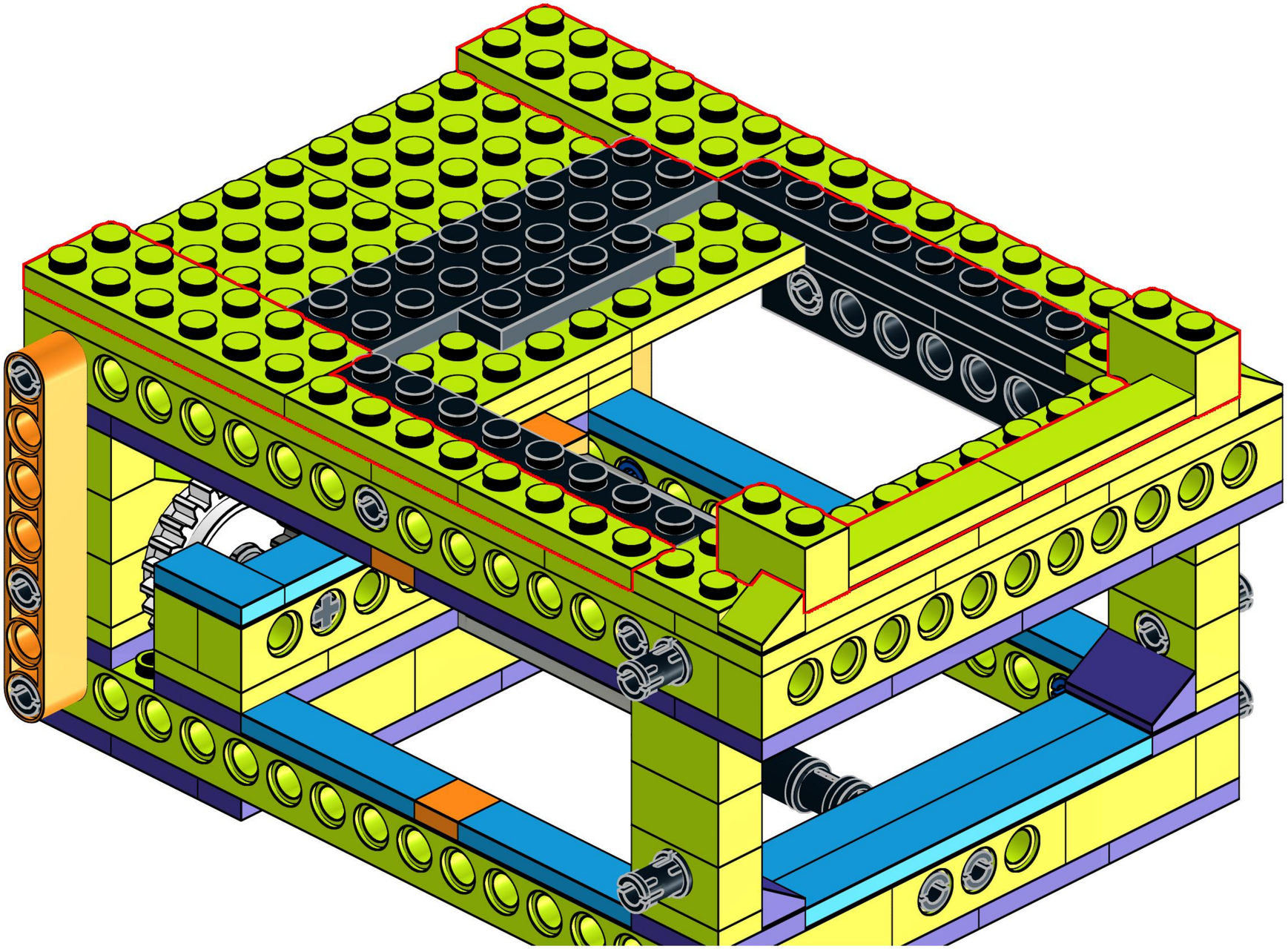

47

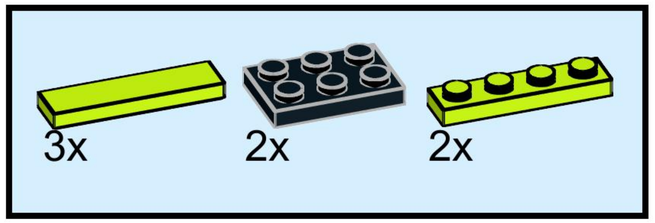

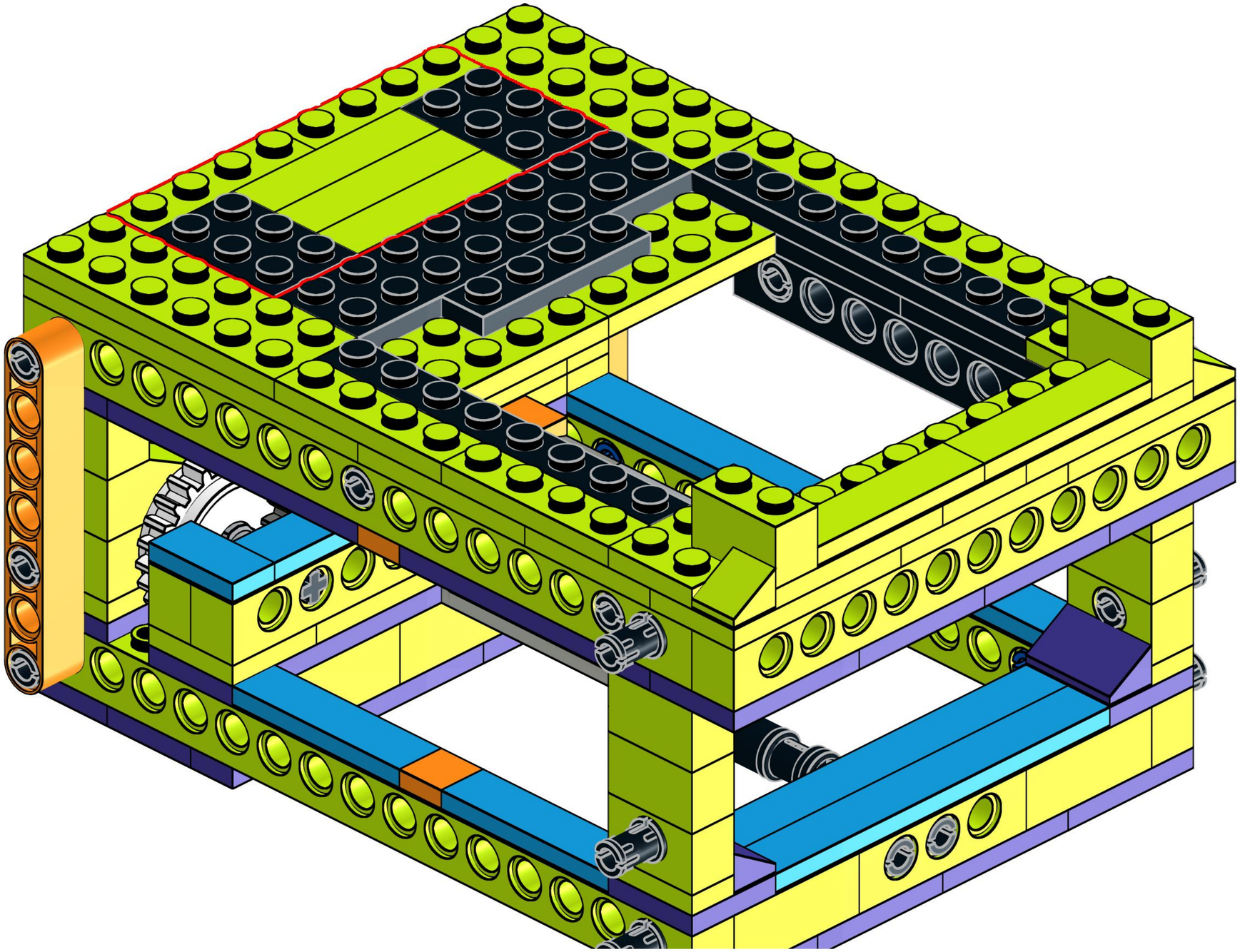

48

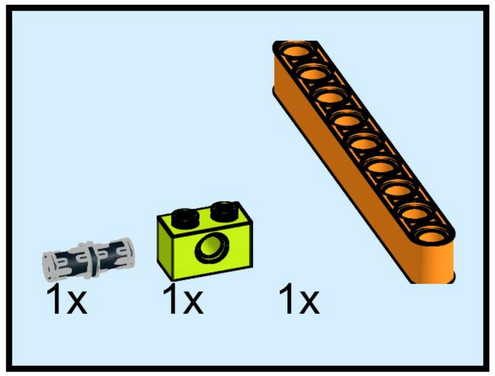

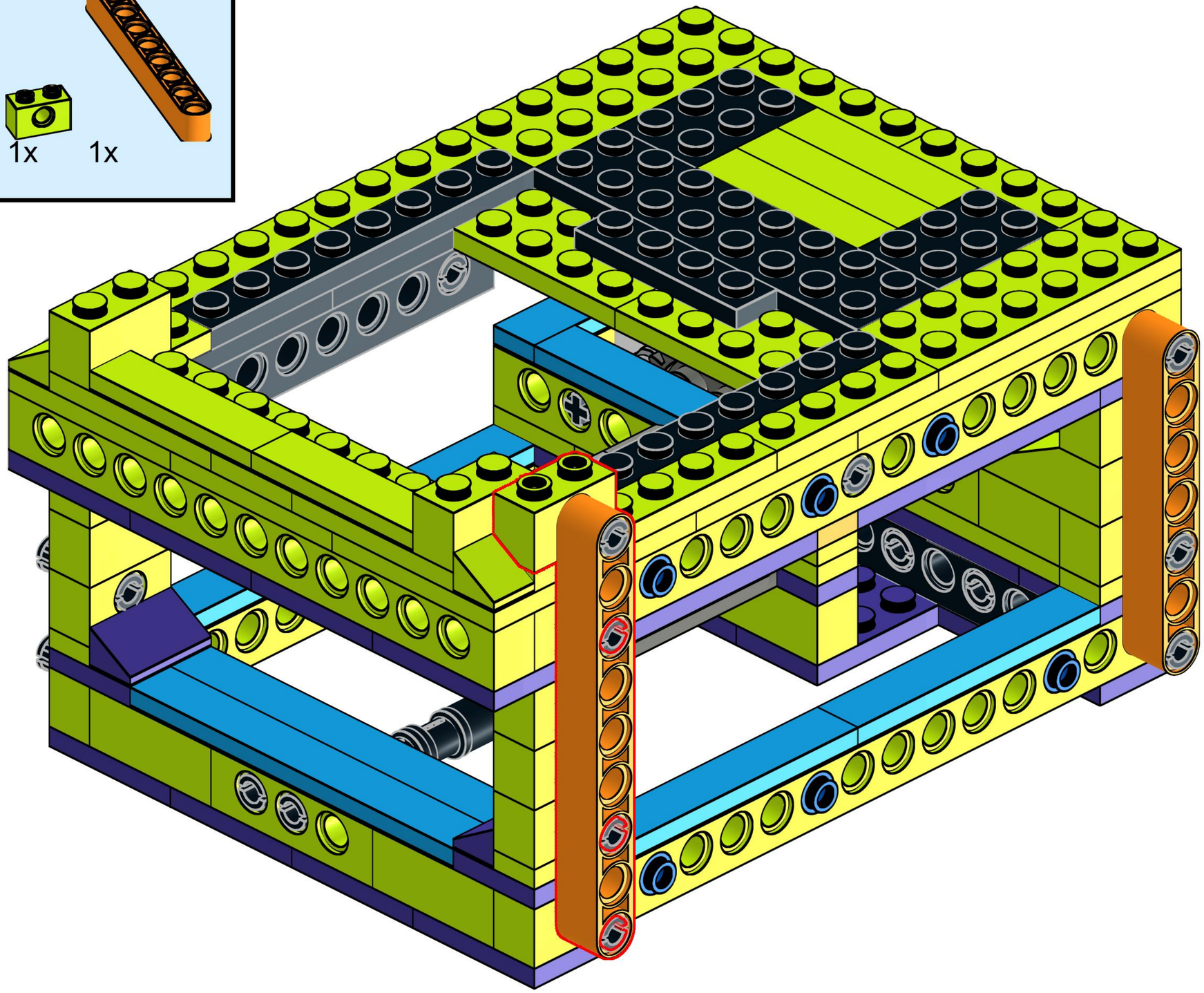

49

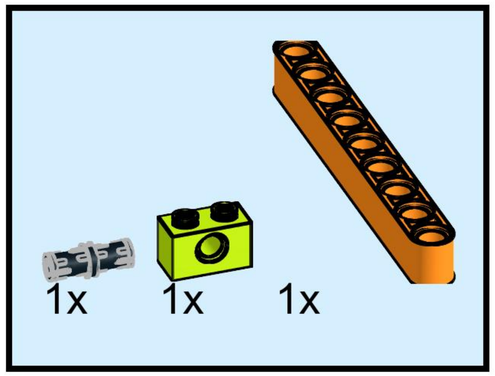

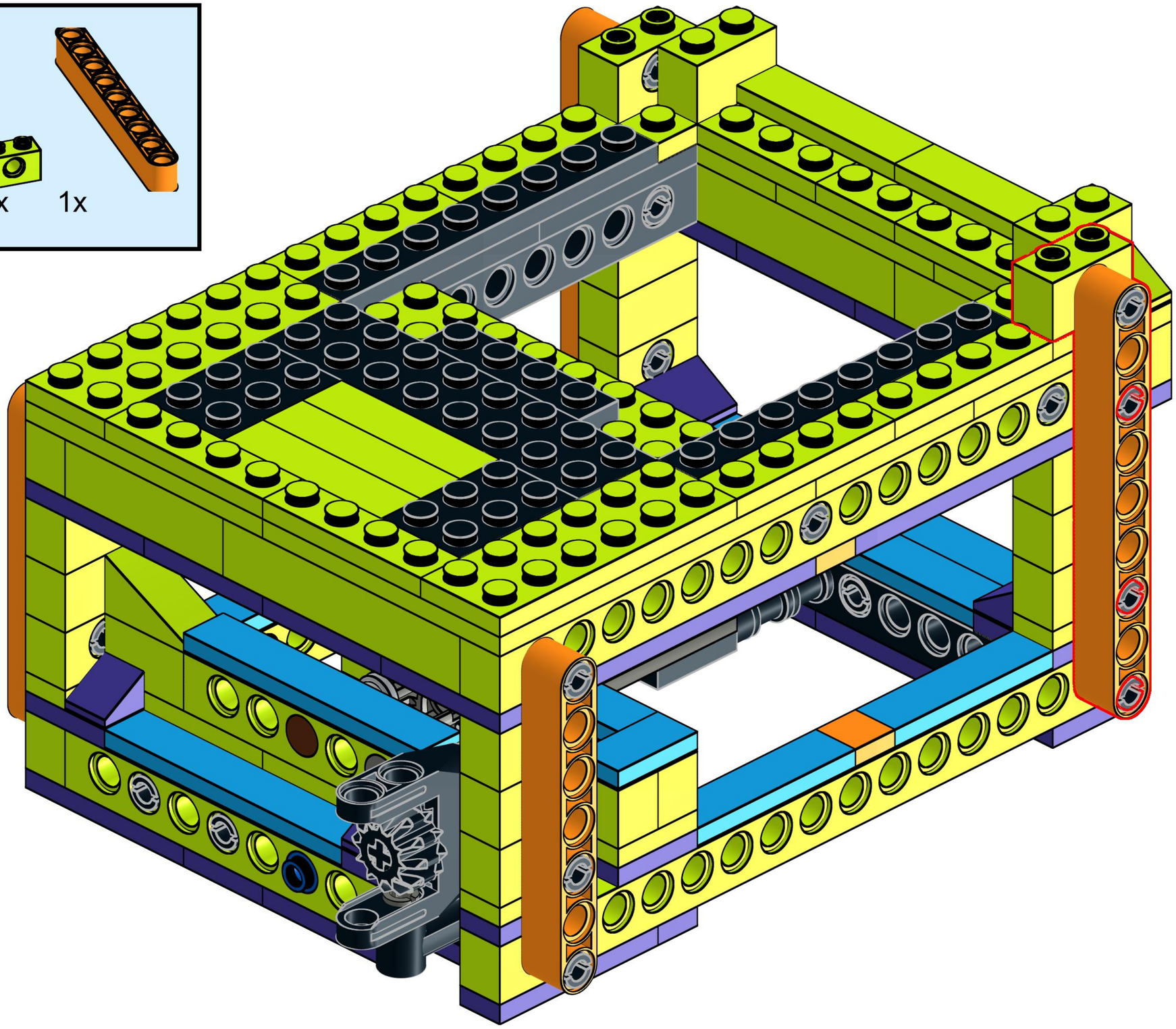

50

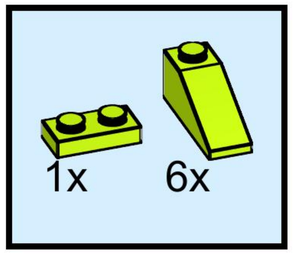

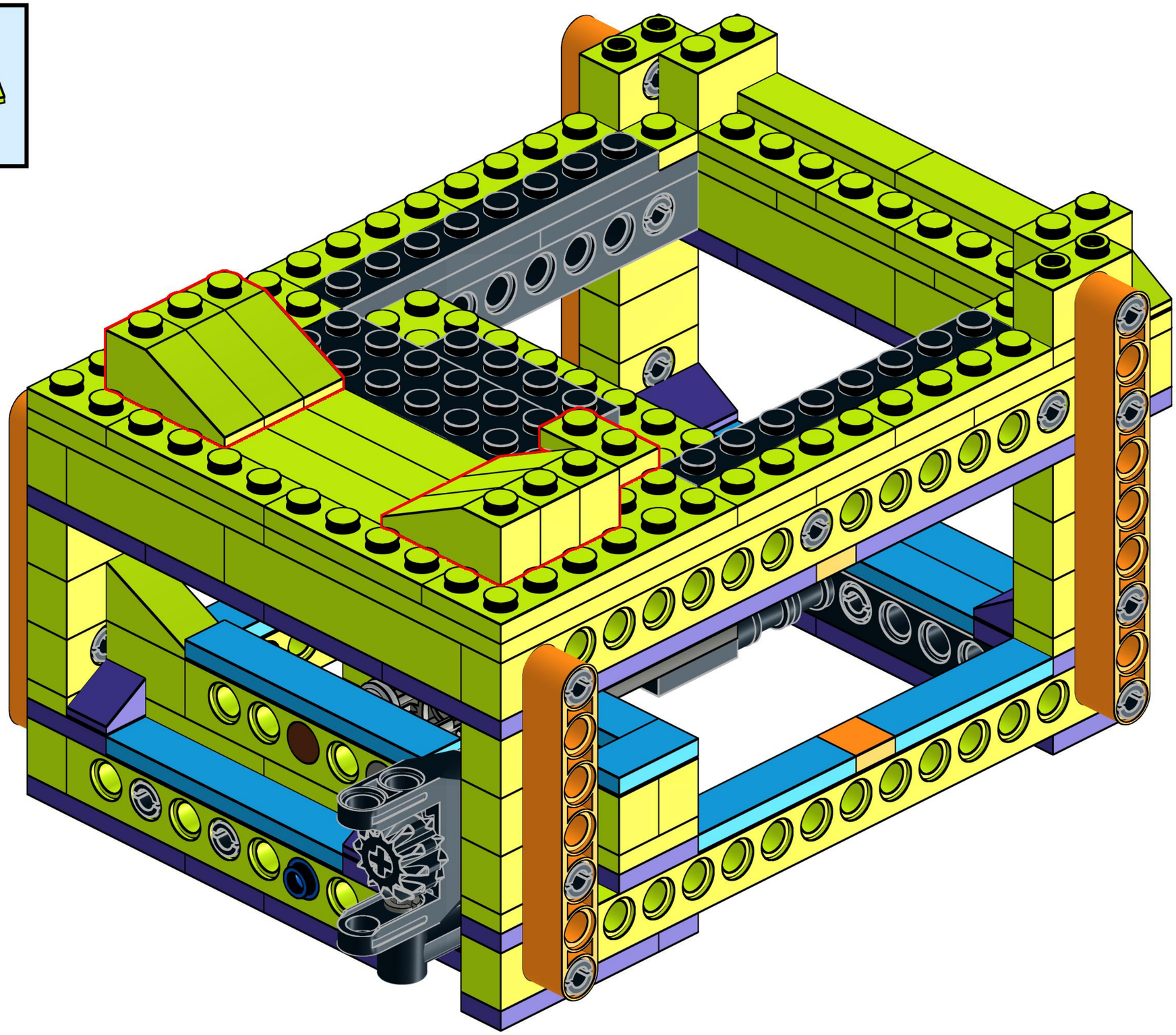

51

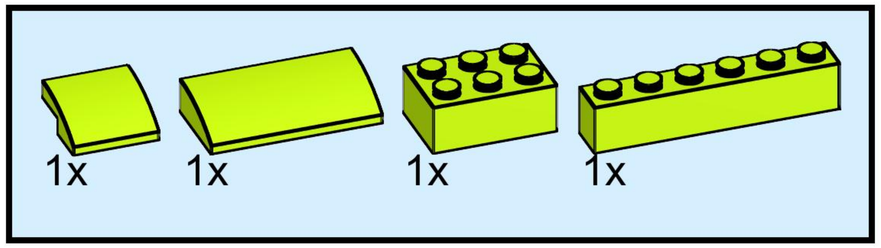

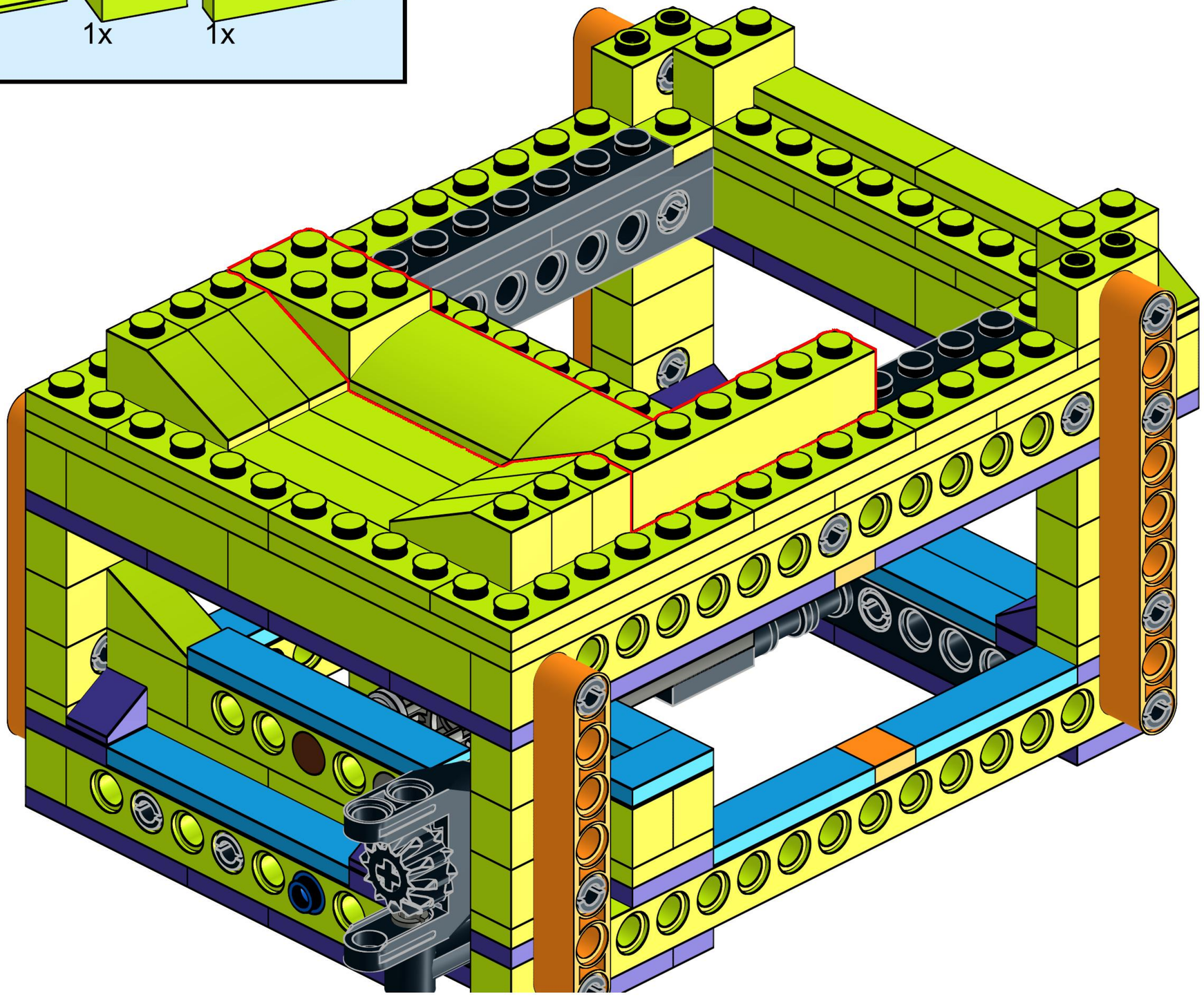

52

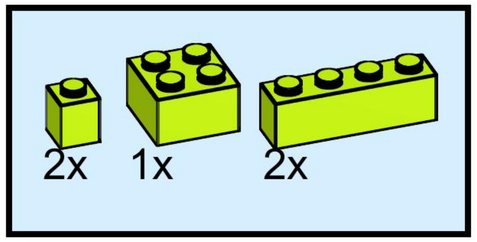

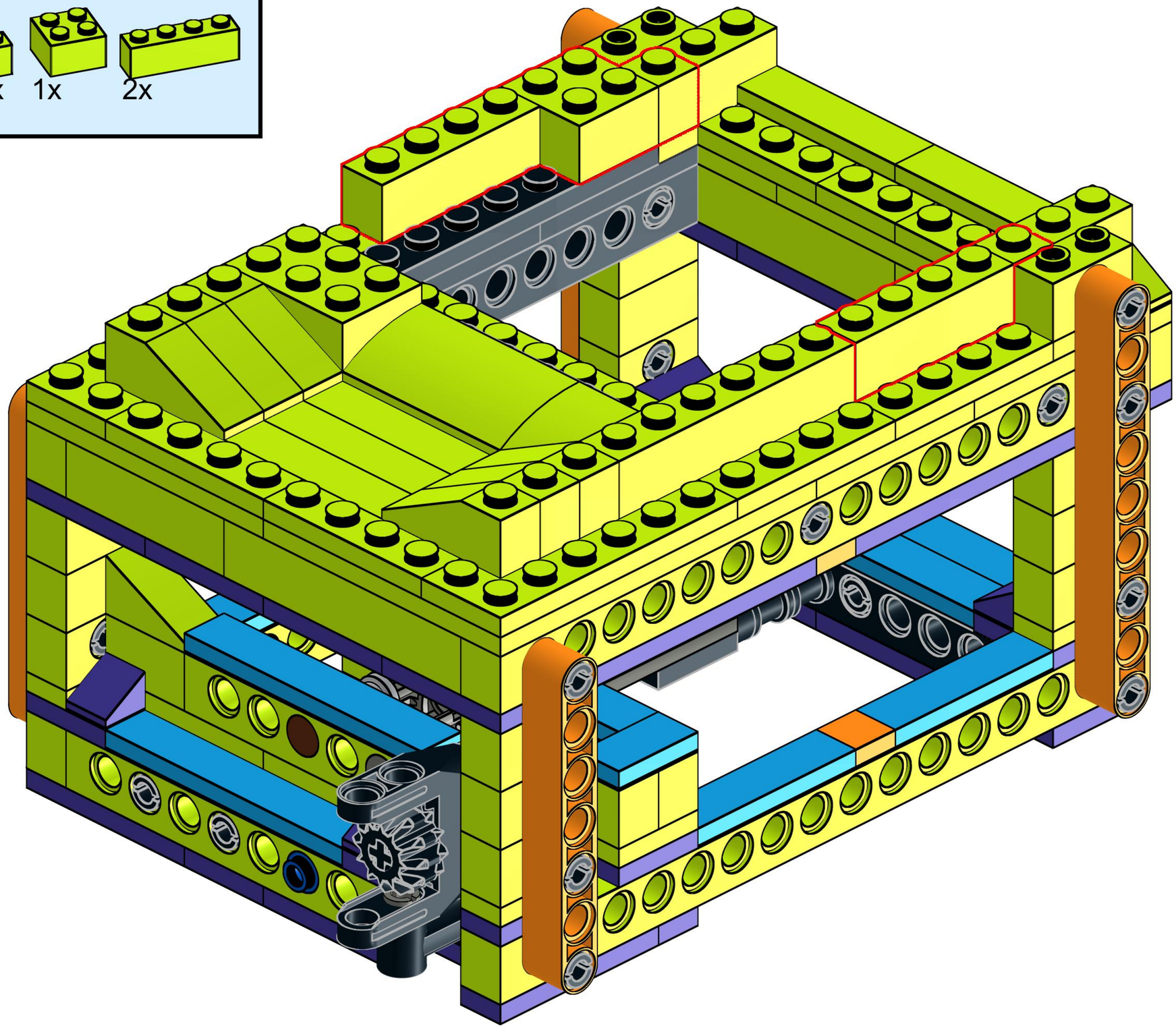

53

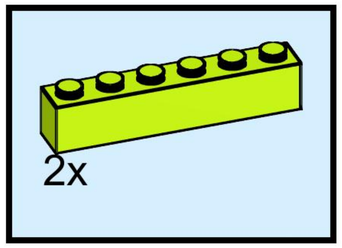

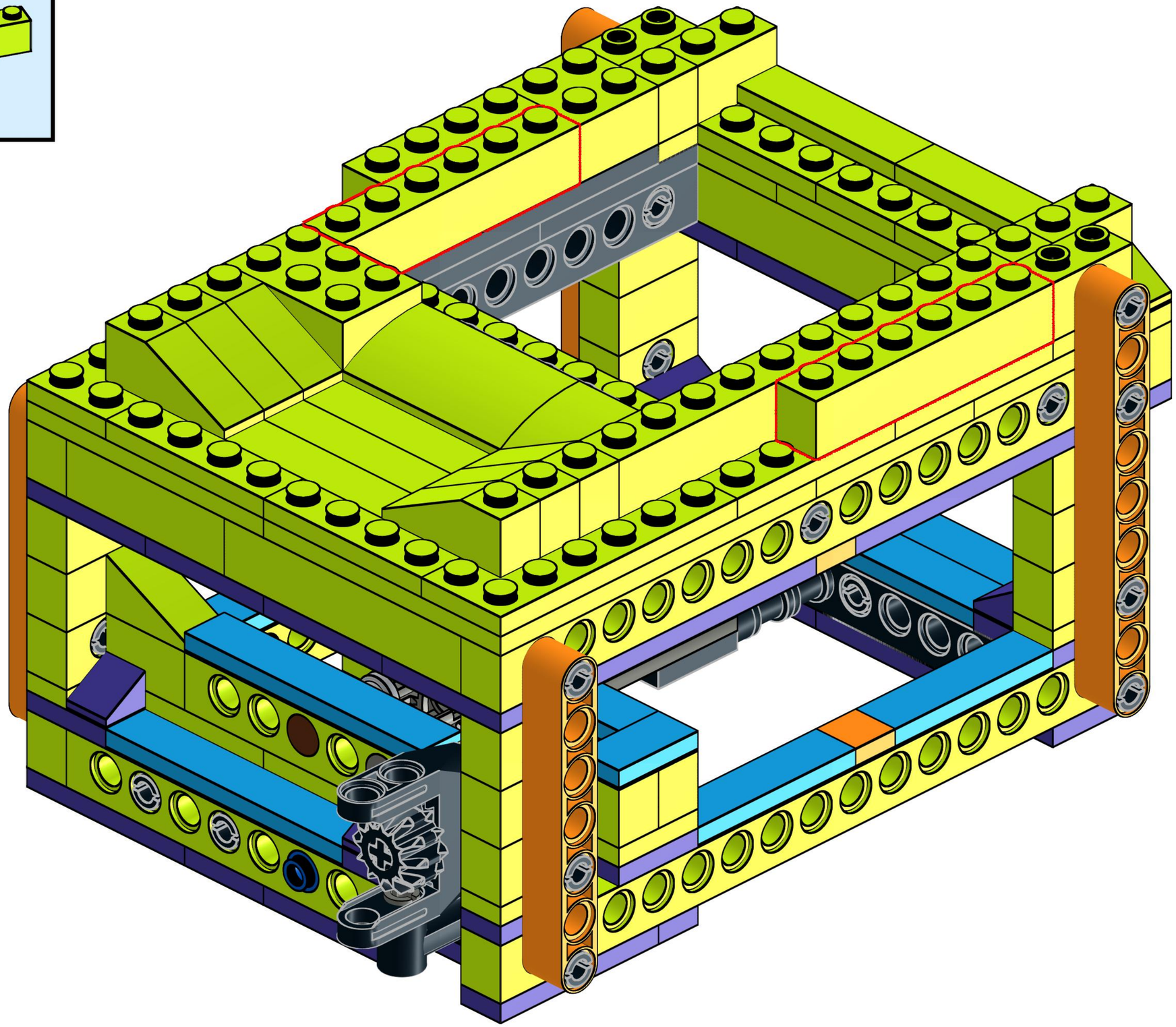

54

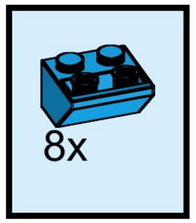

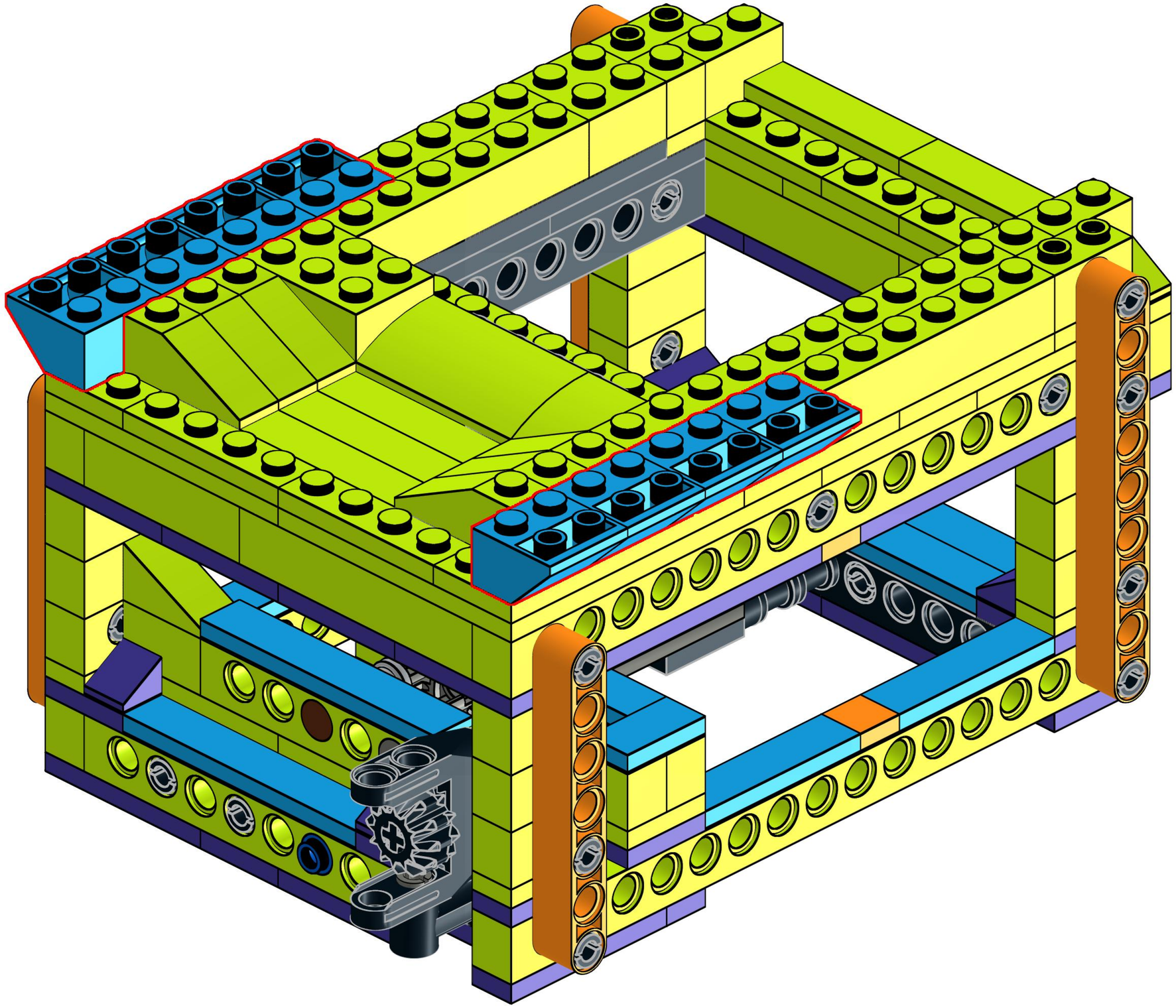

55

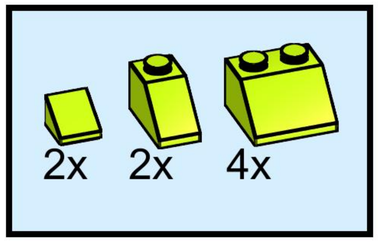

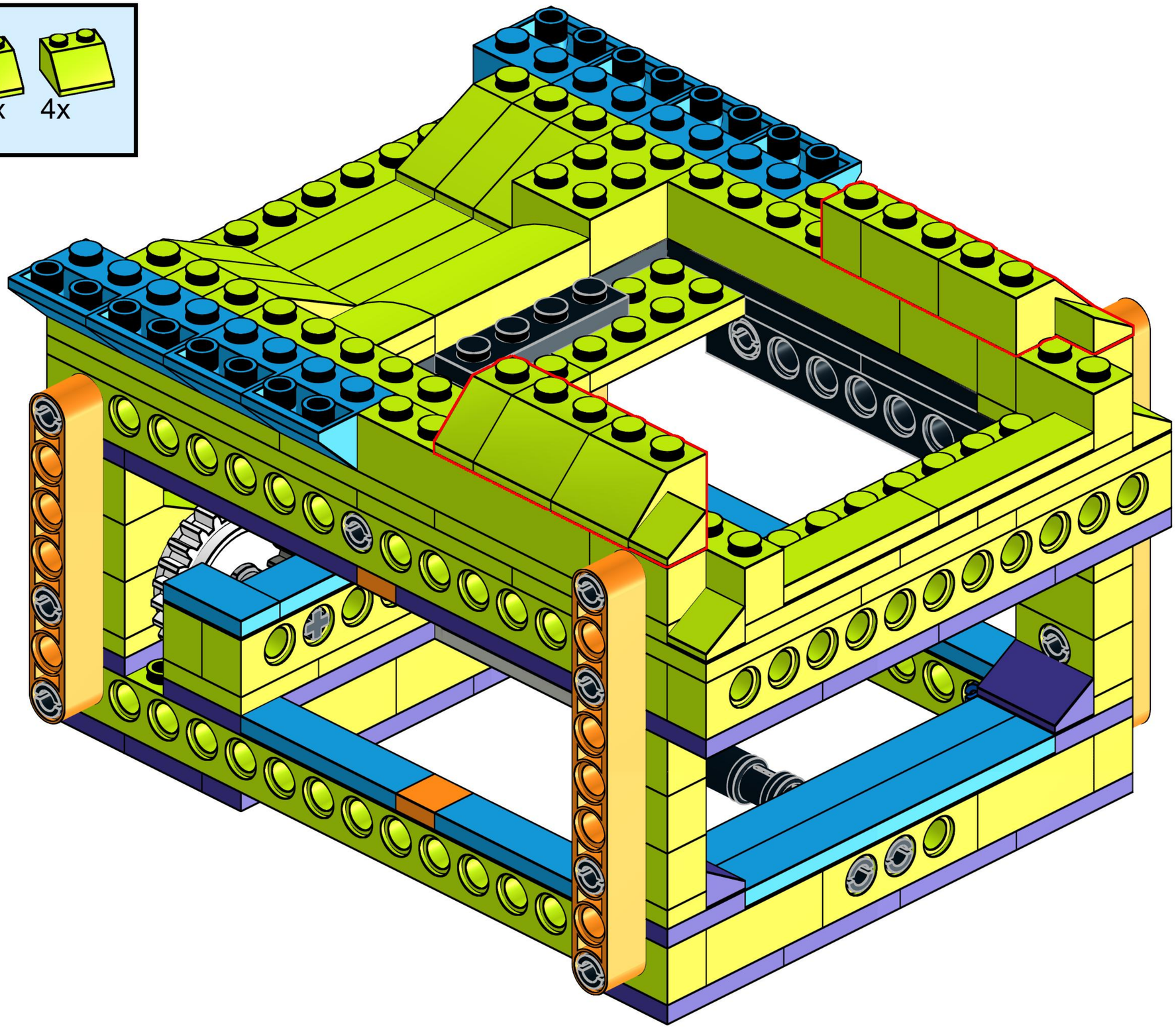

56

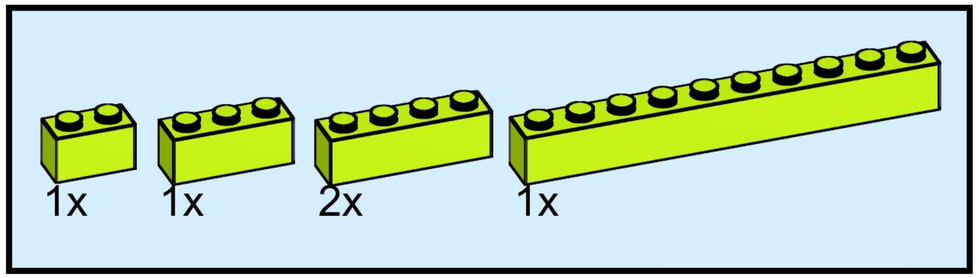

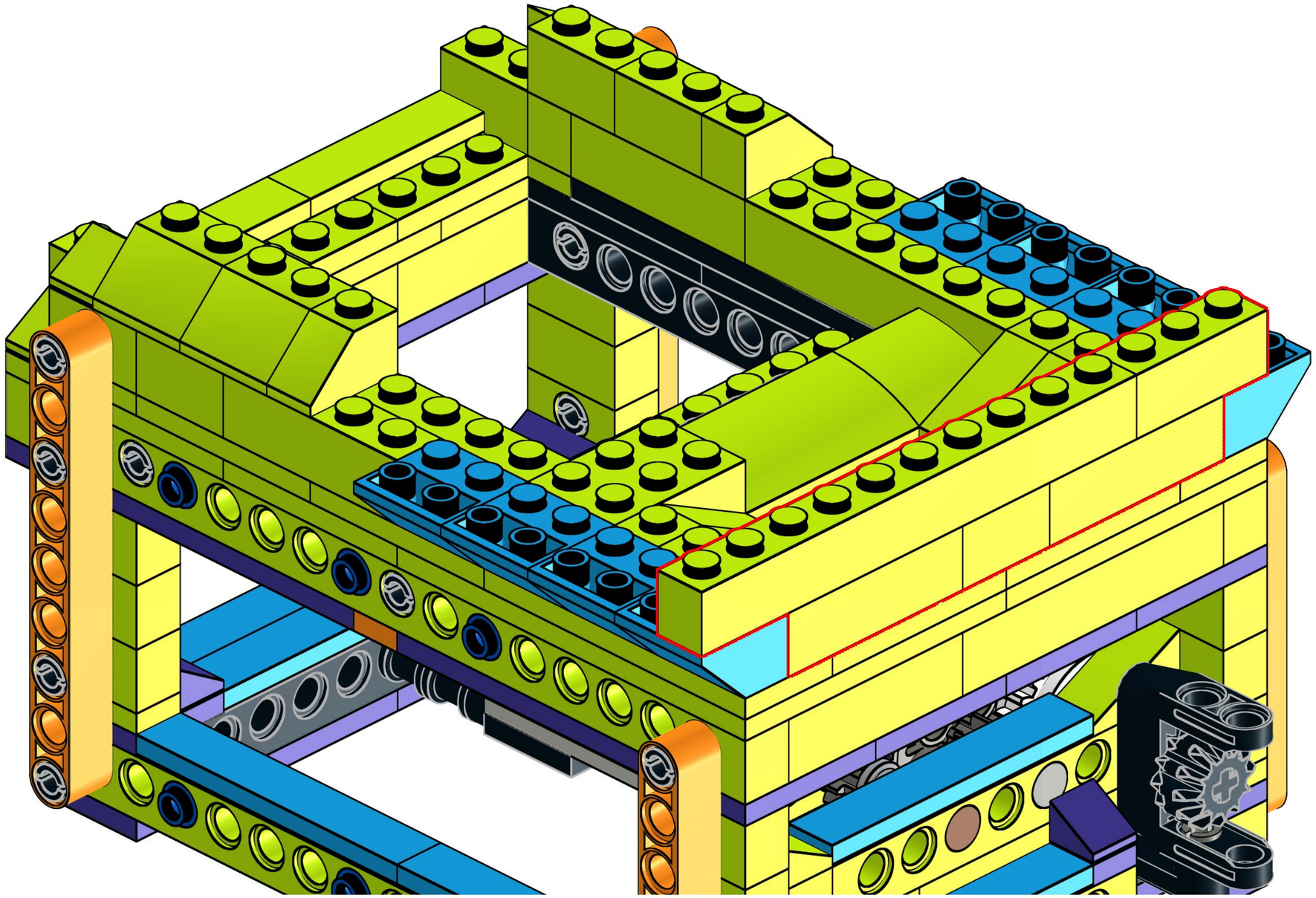

57

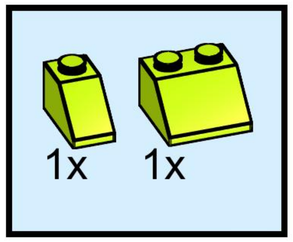

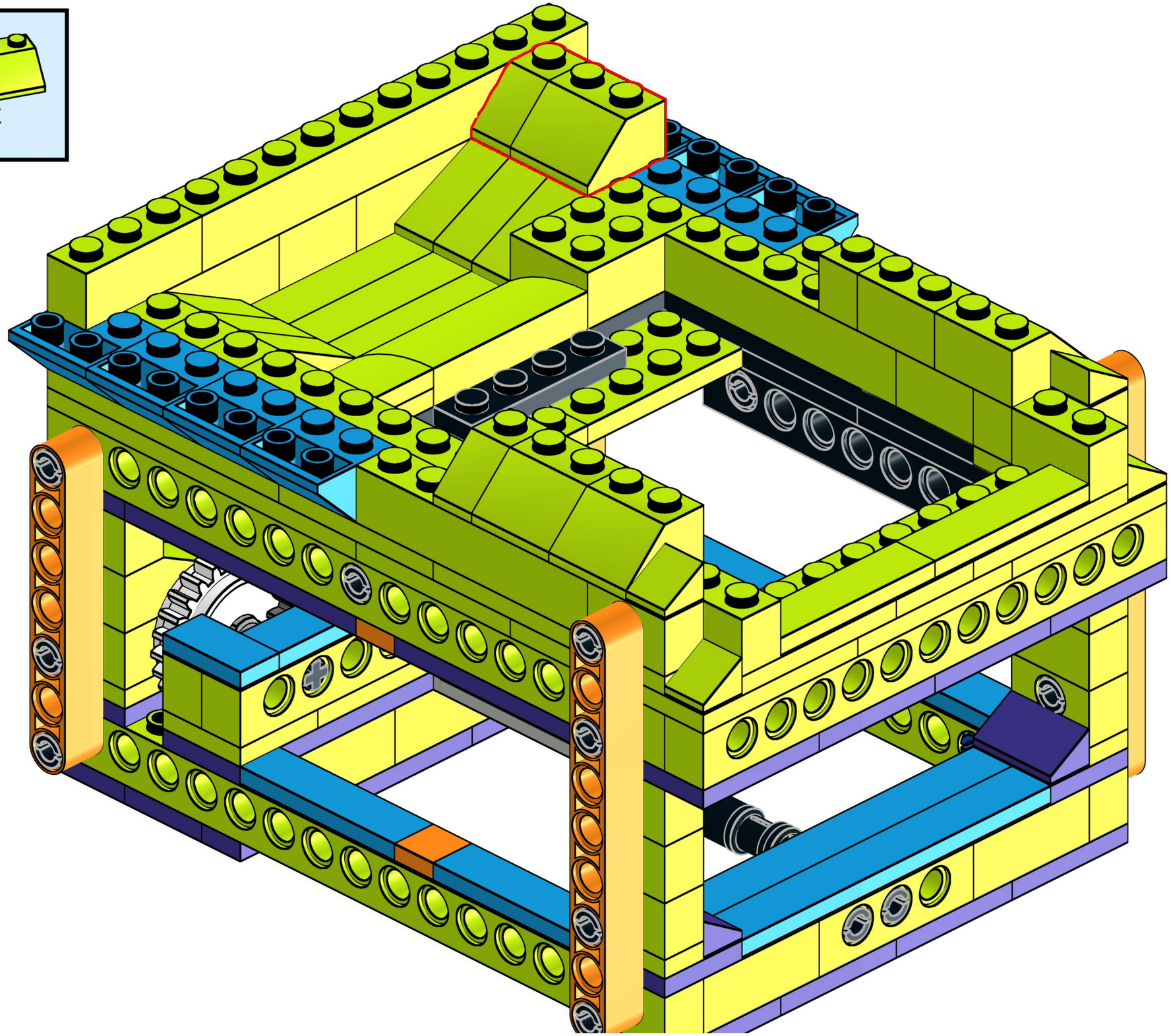

58

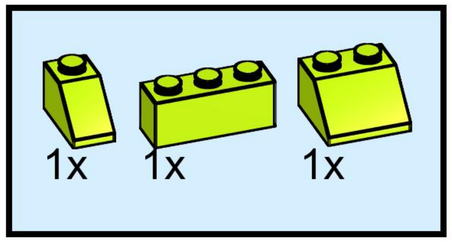

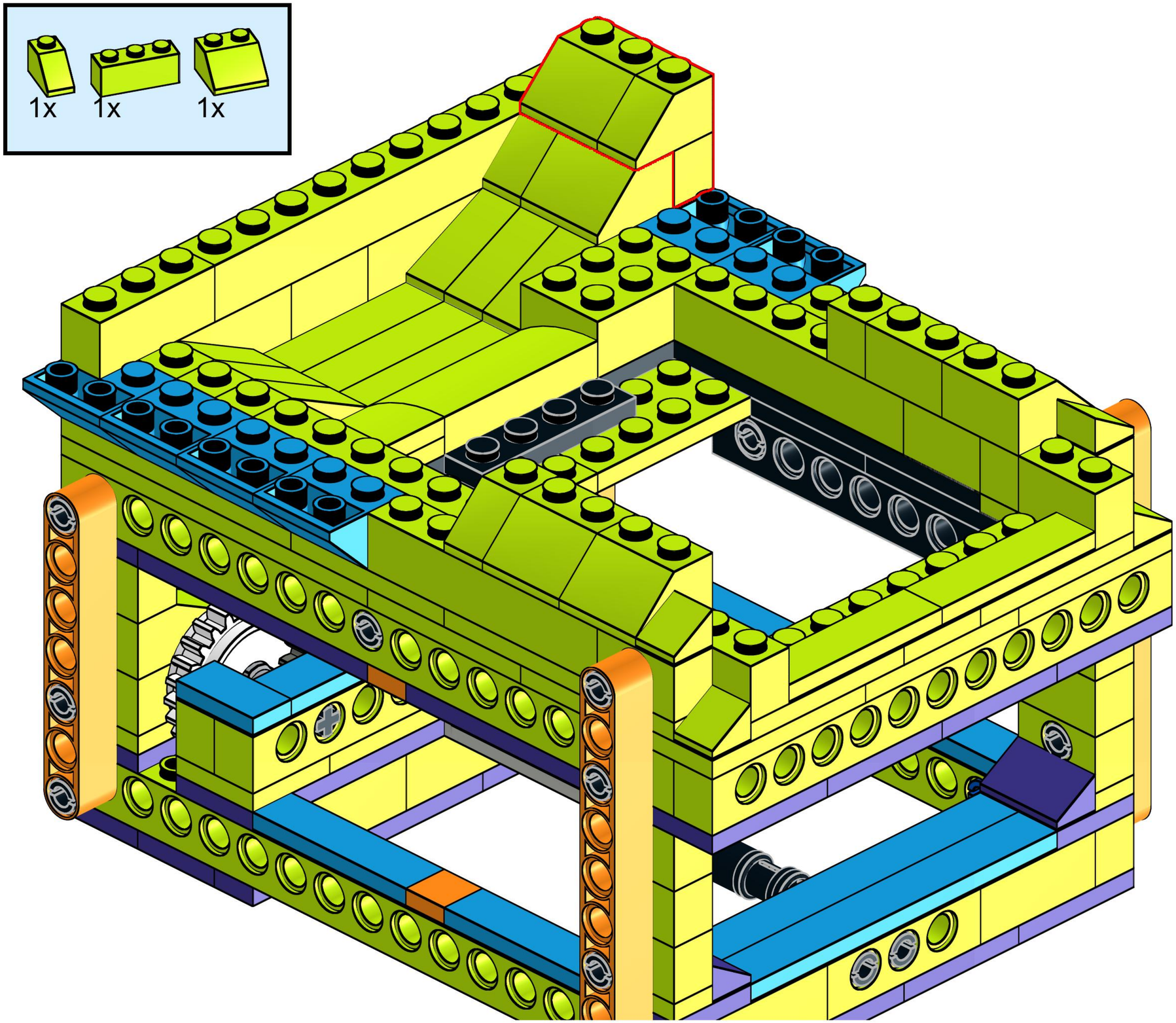

59

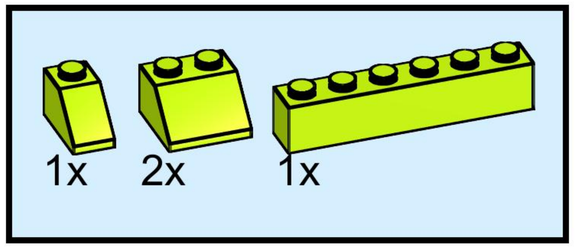

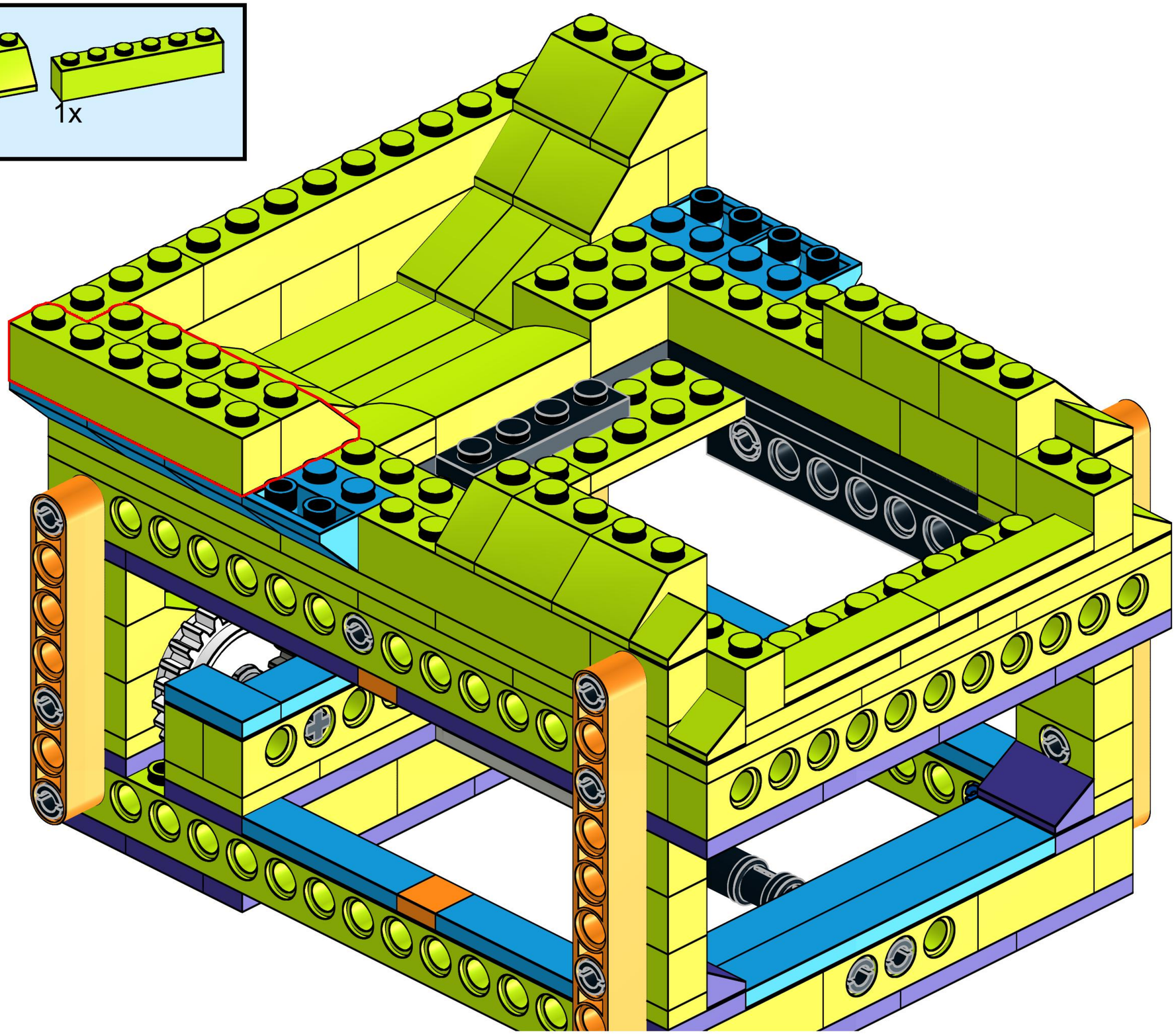

60

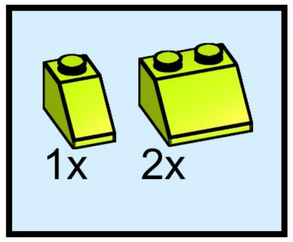

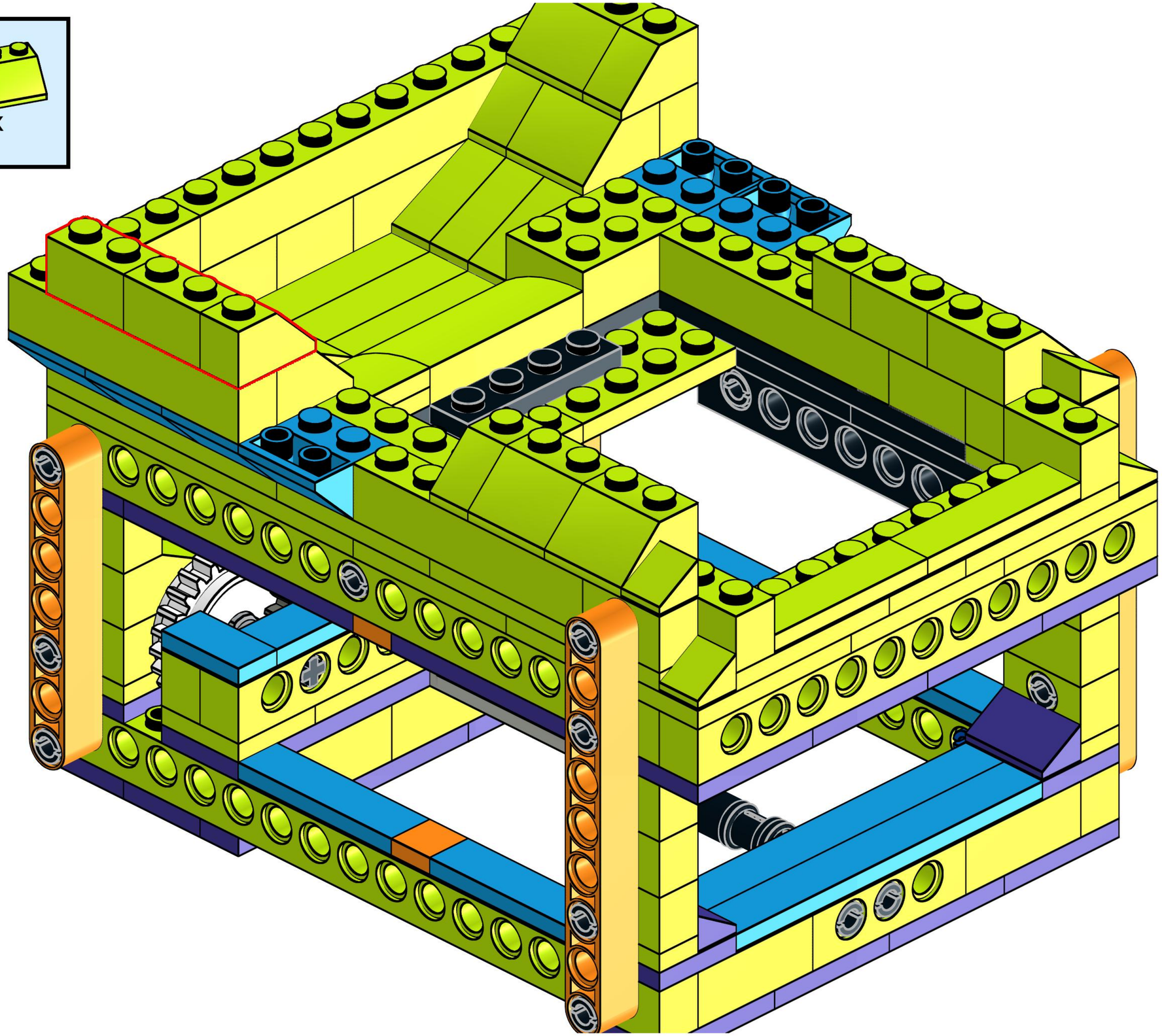

61

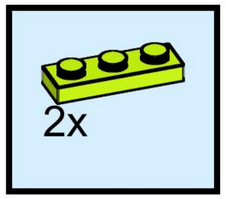

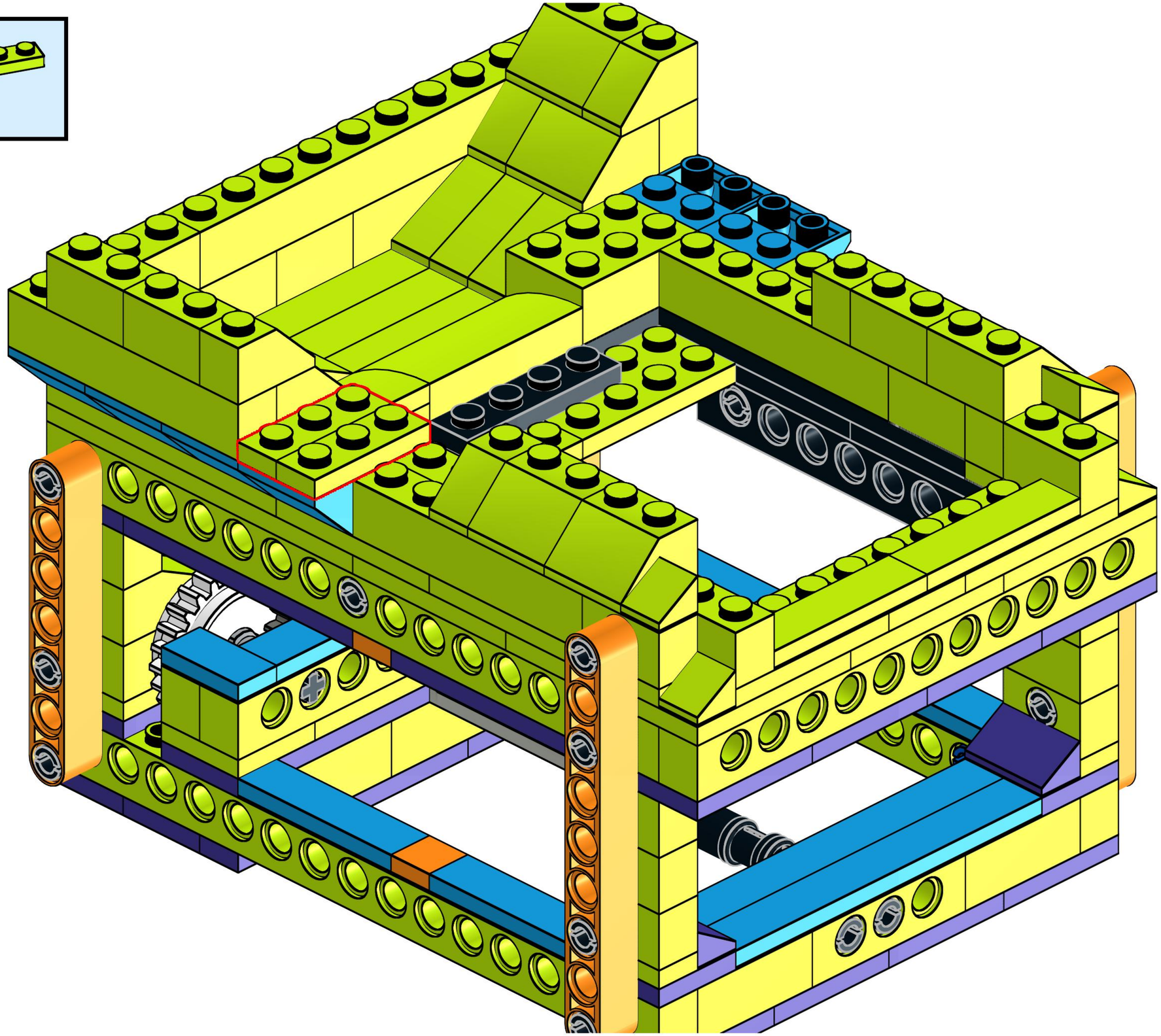

62

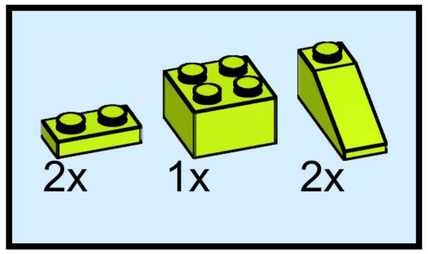

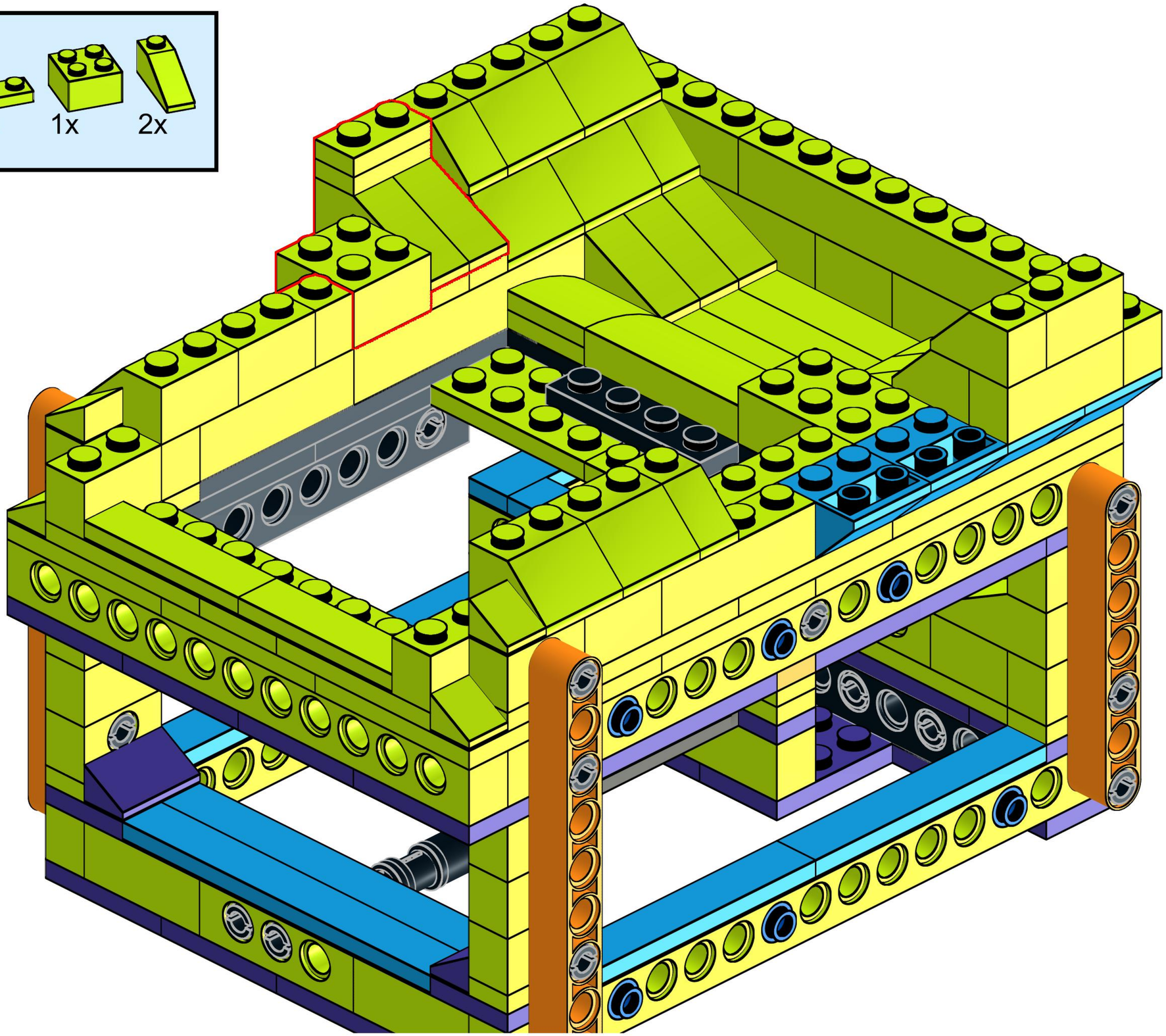

63

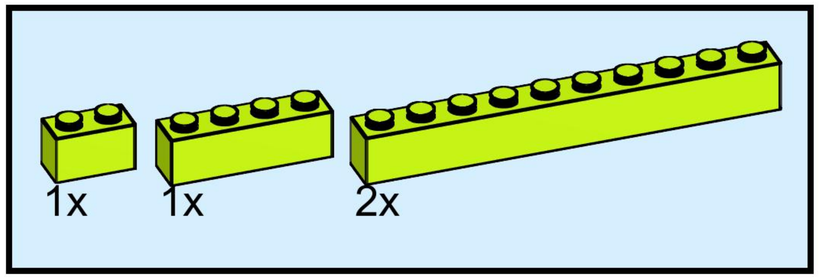

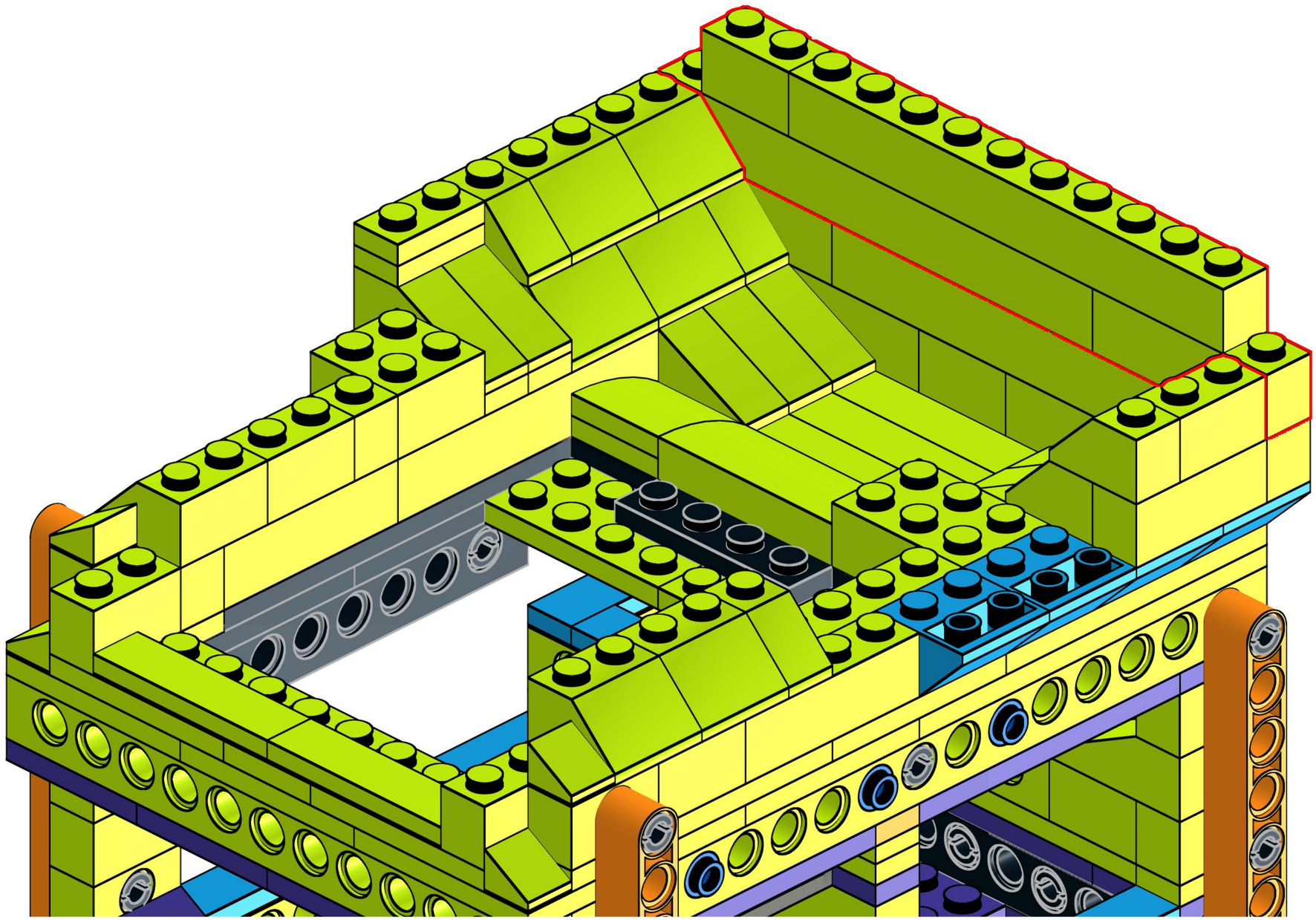

64

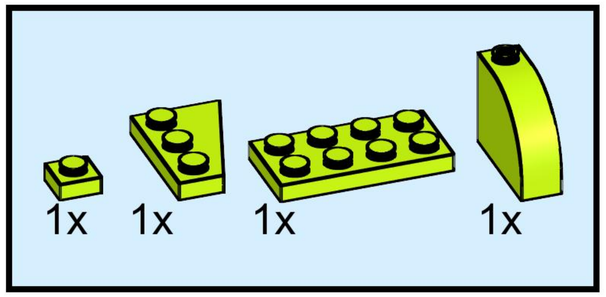

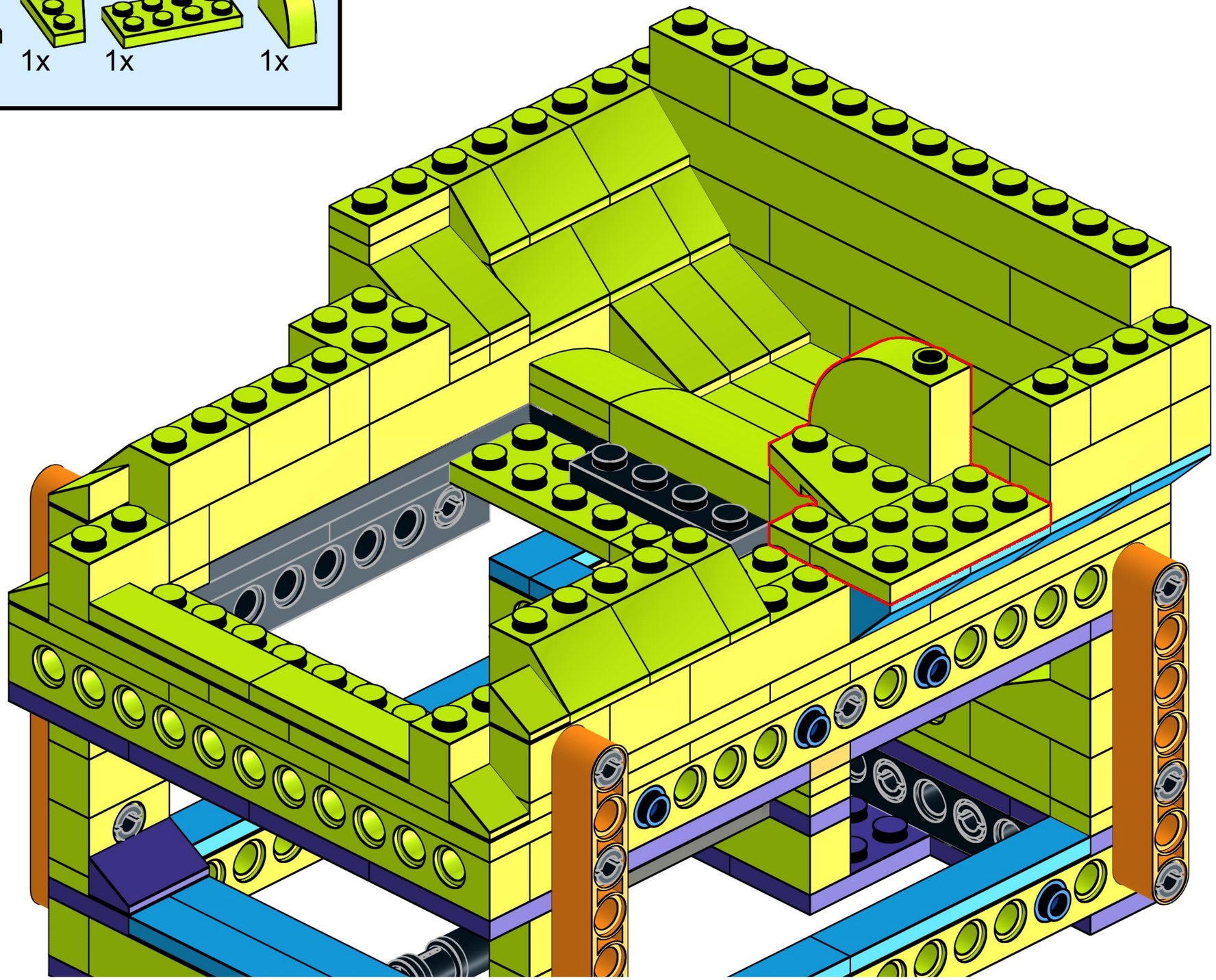

65

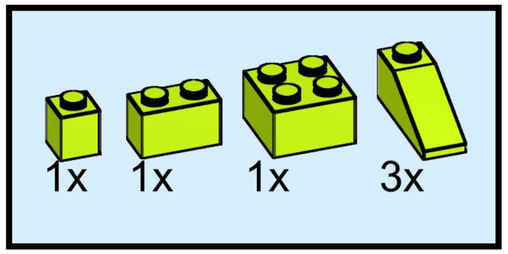

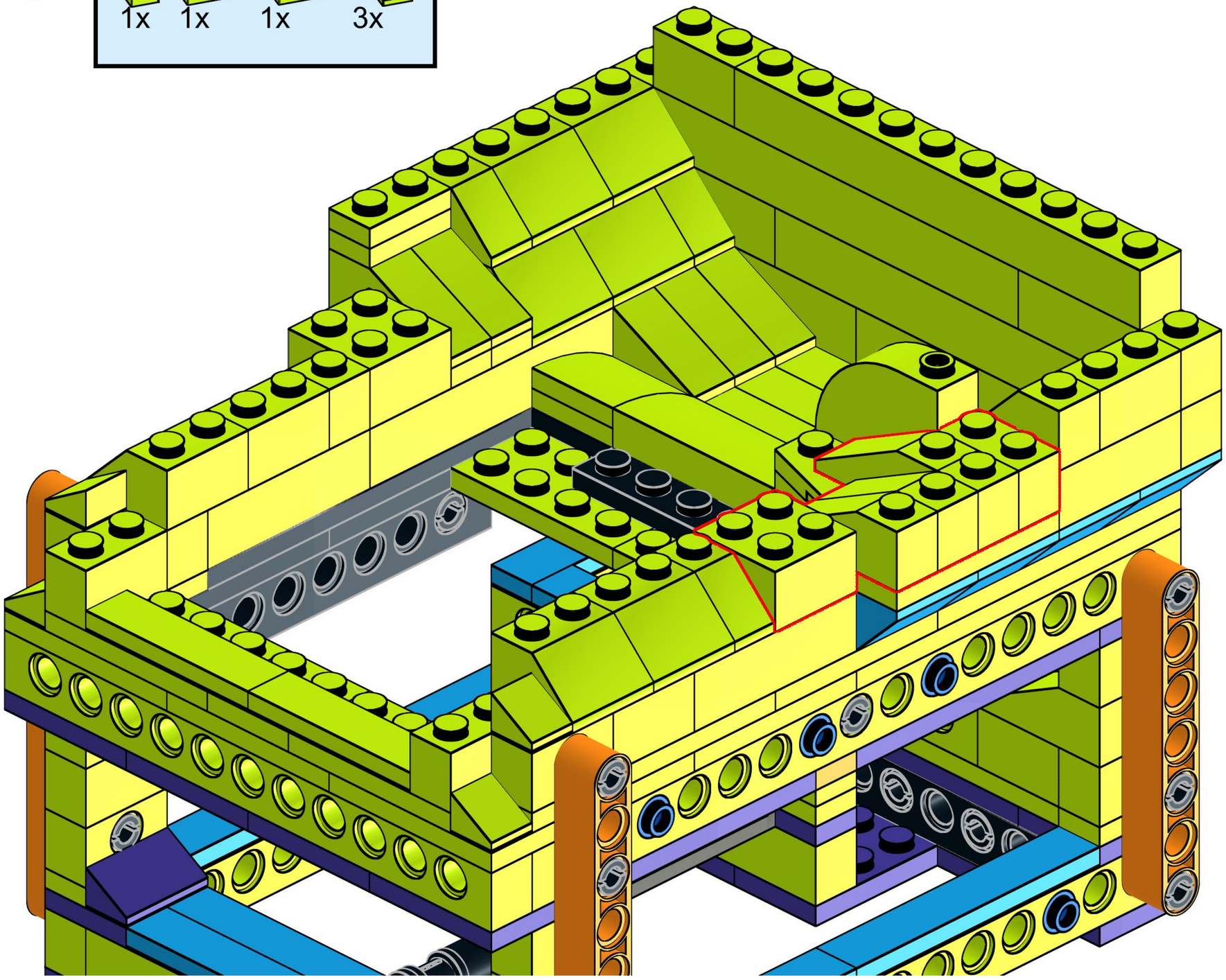

66

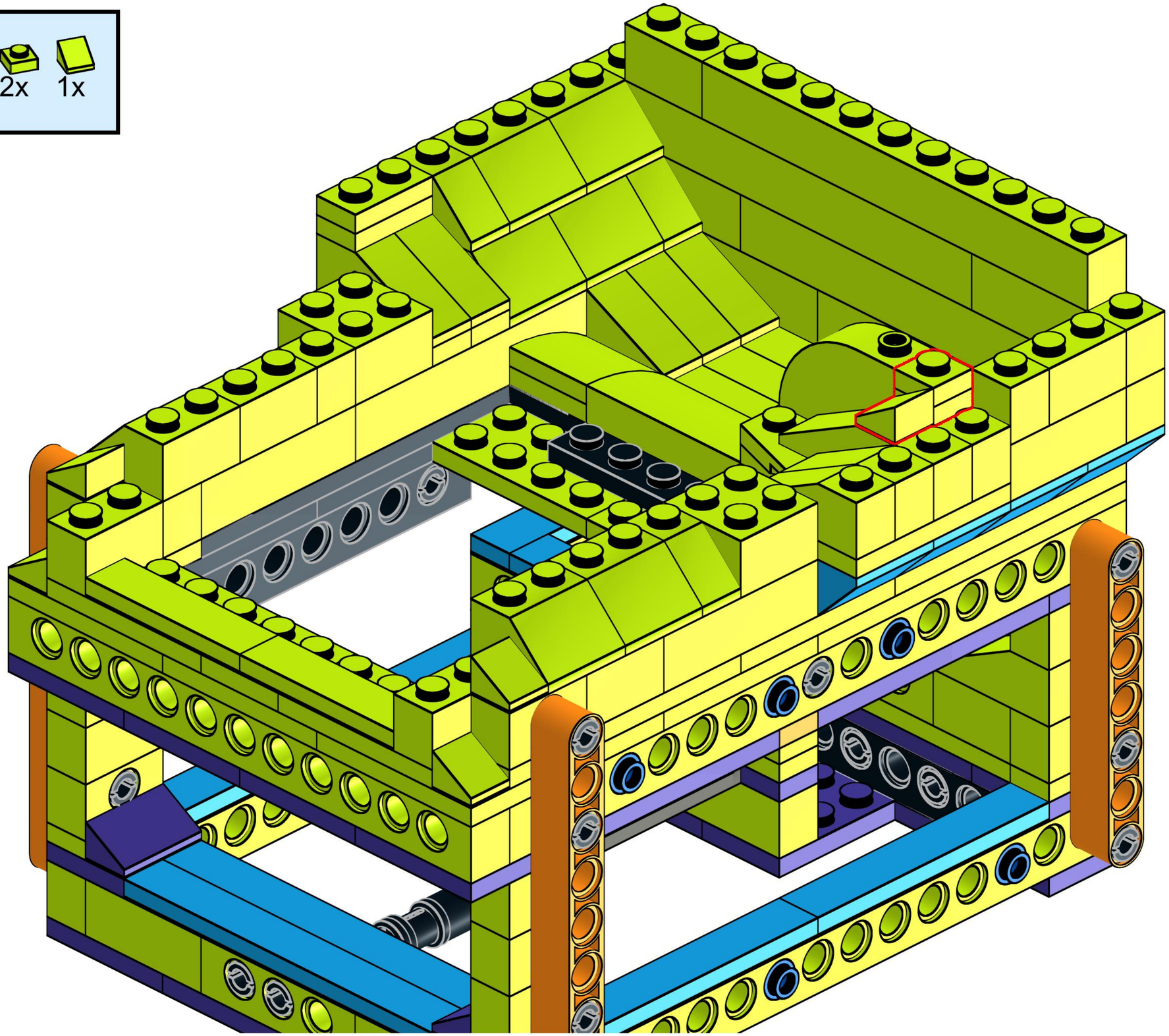

67

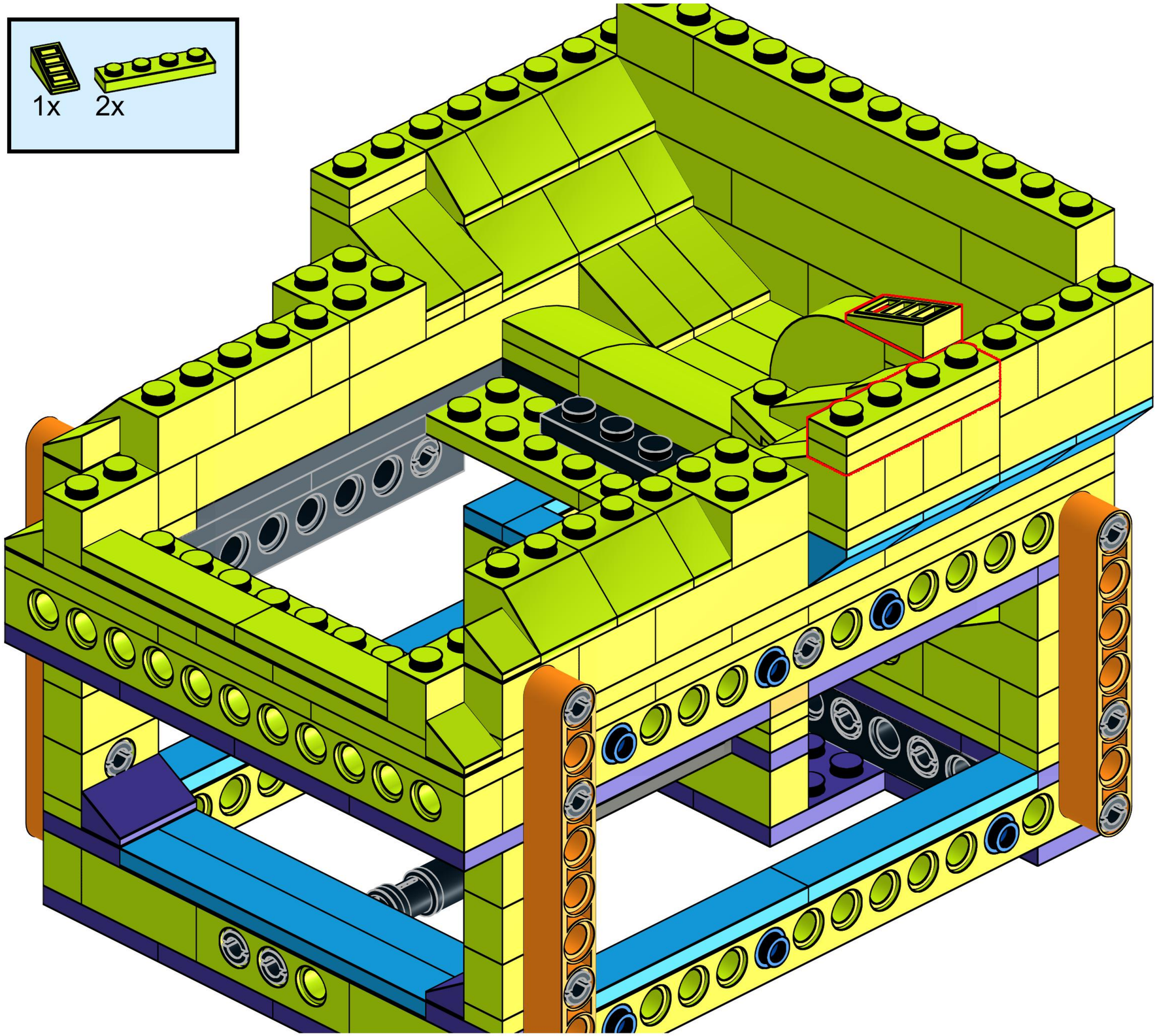

68

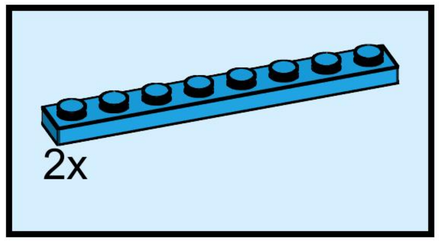

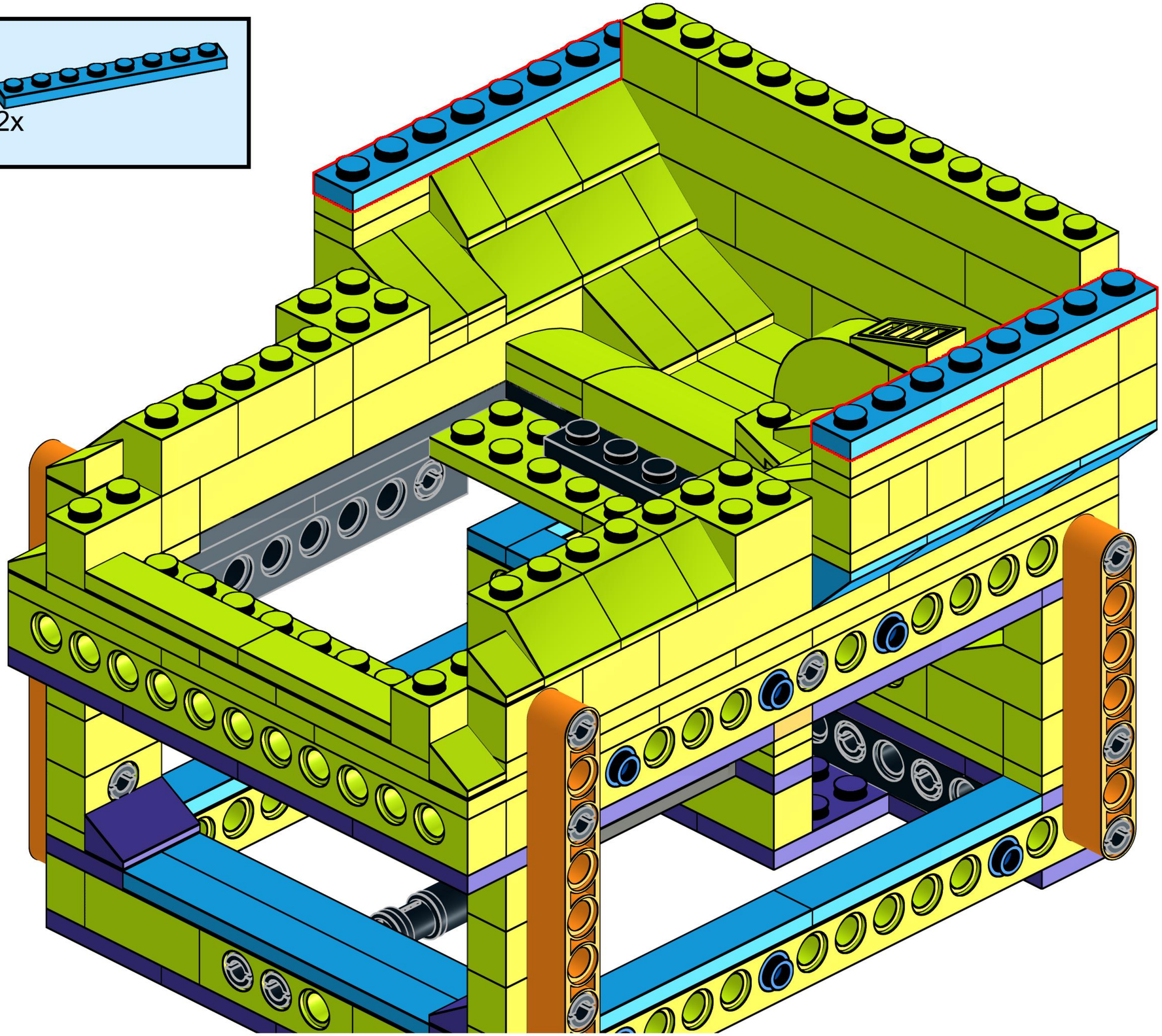

69

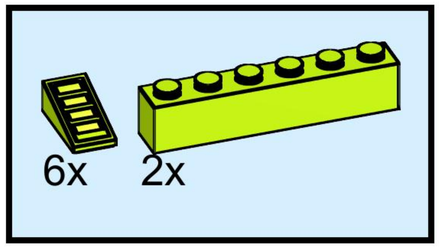

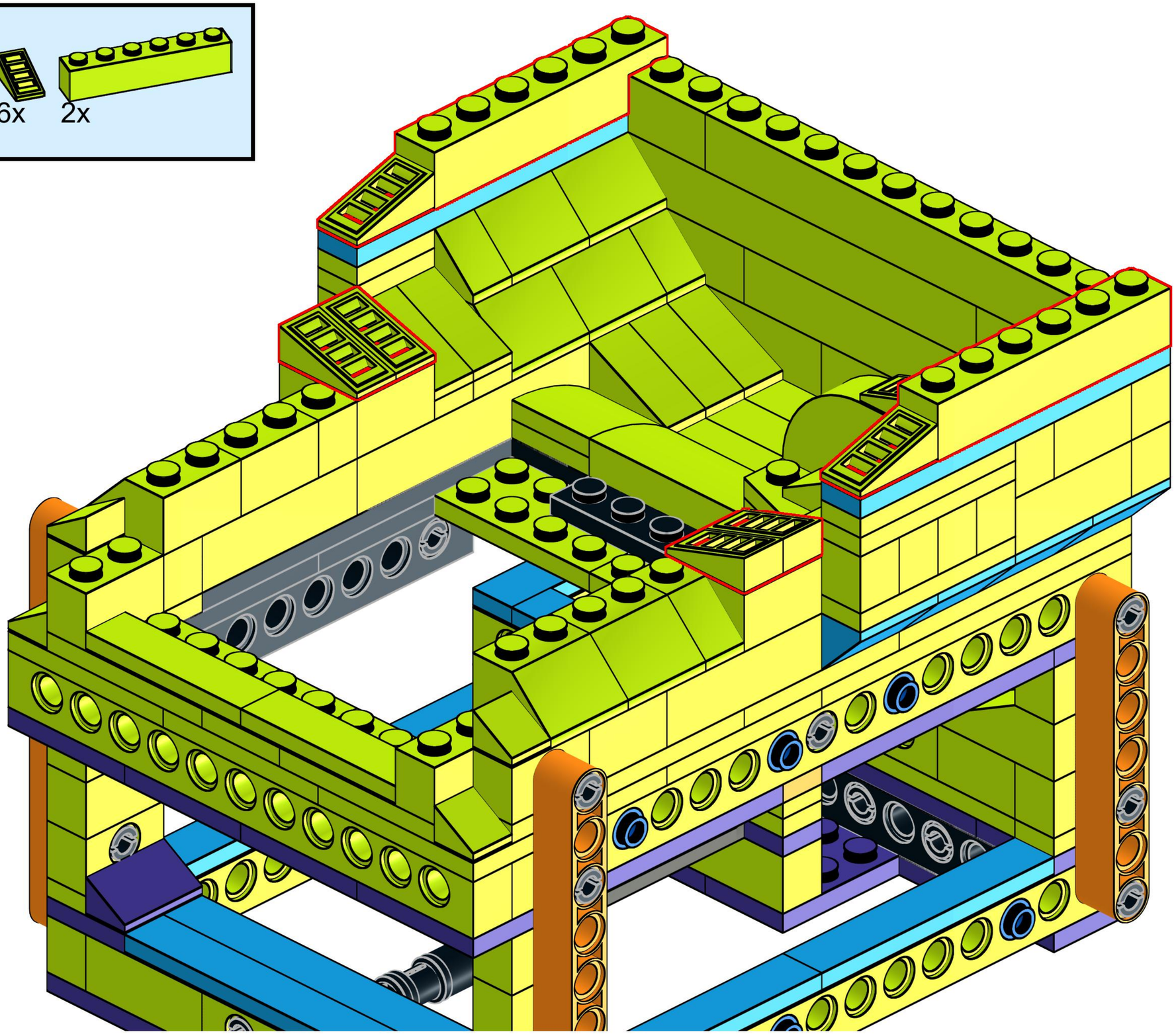

70

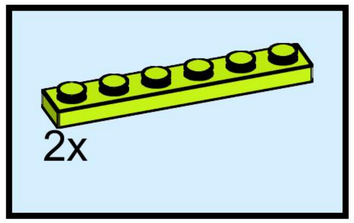

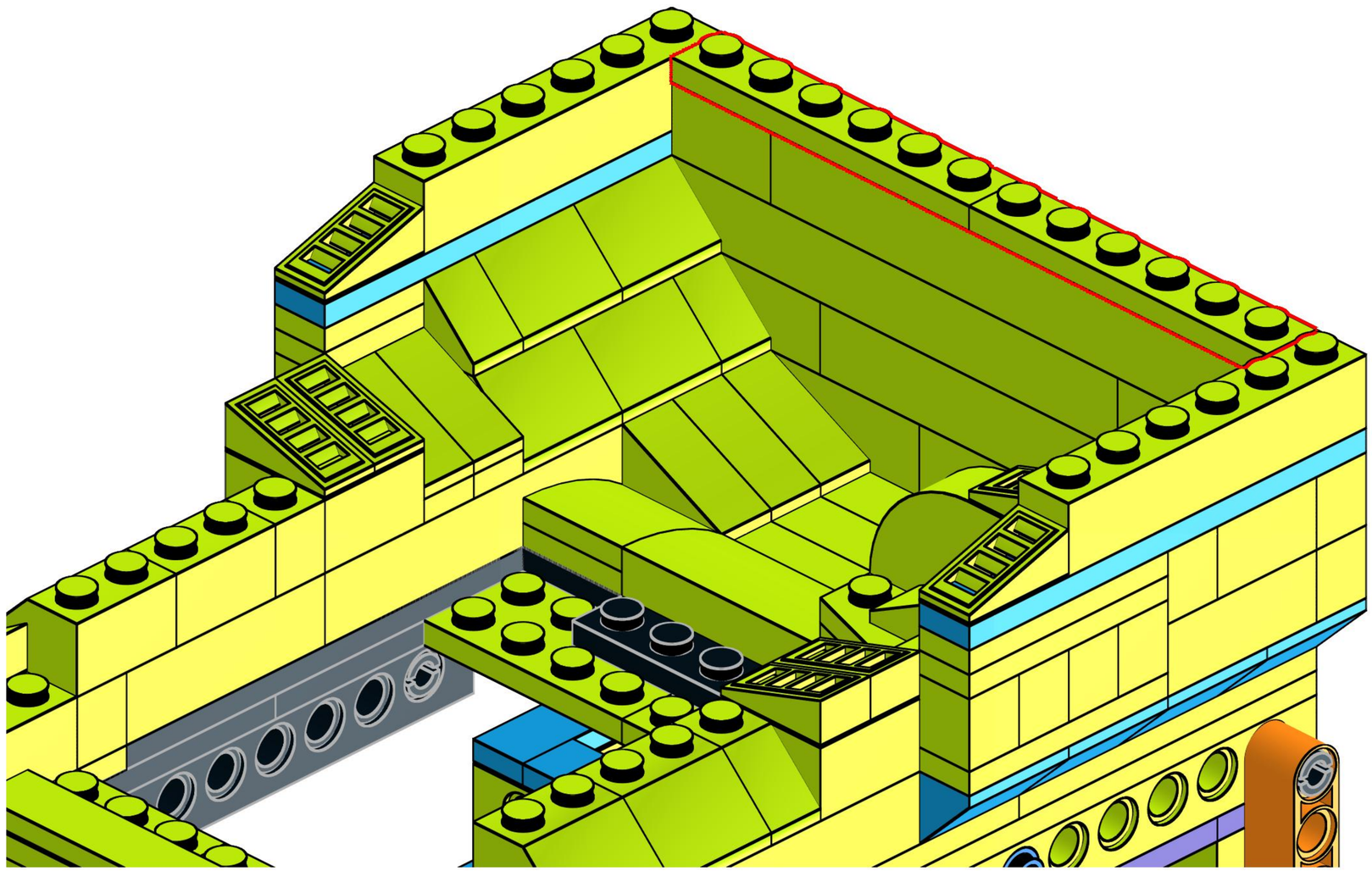

71

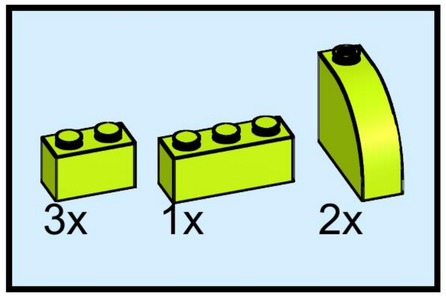

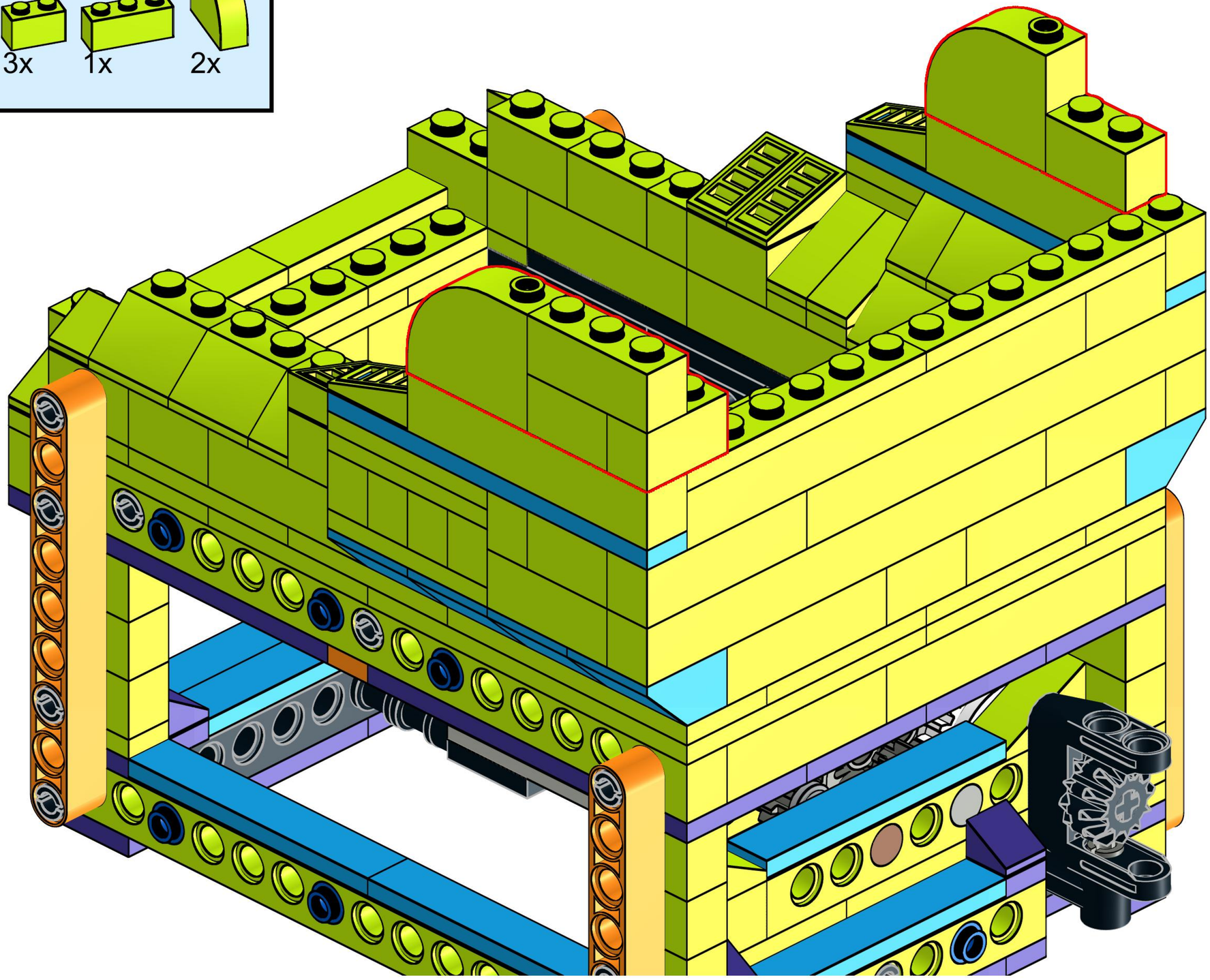

72

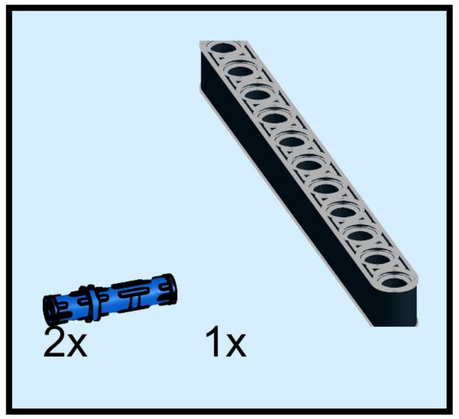

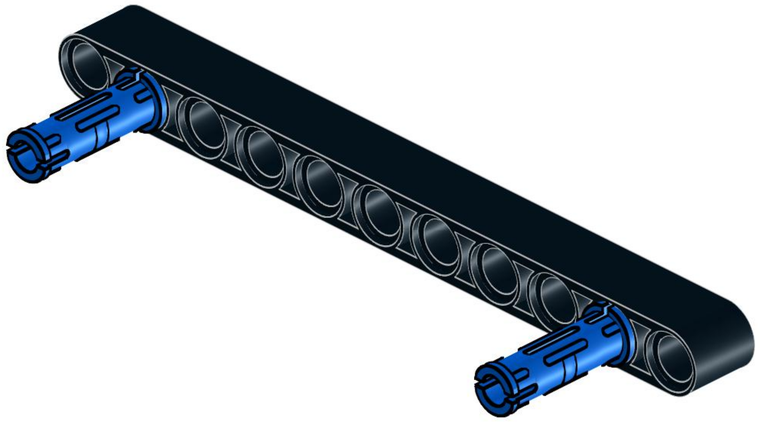

73

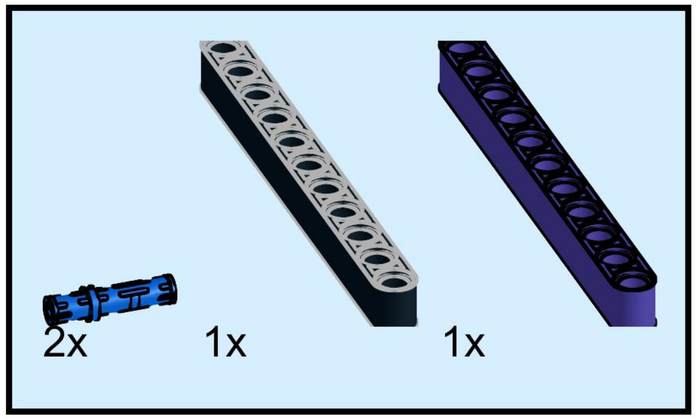

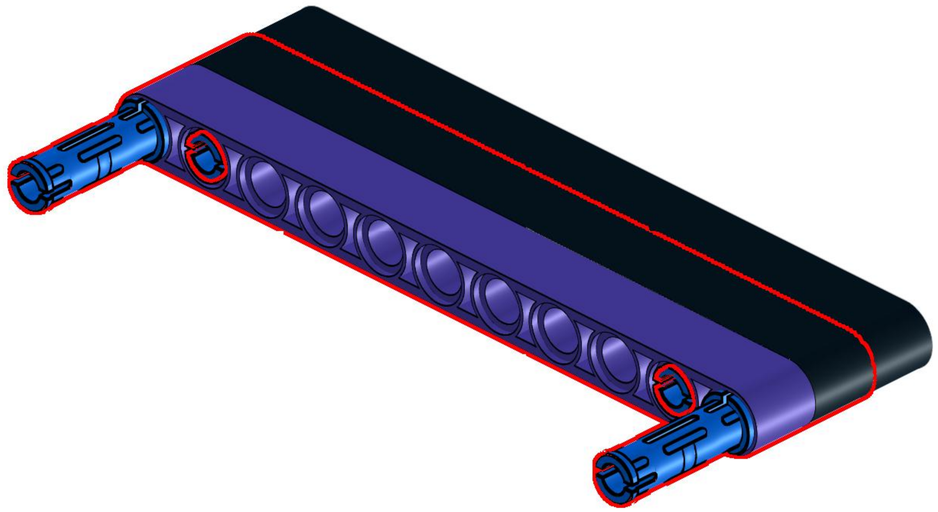

74

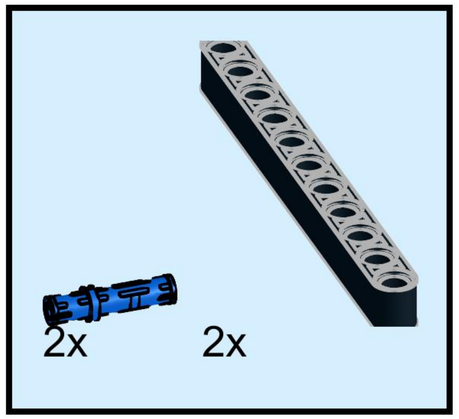

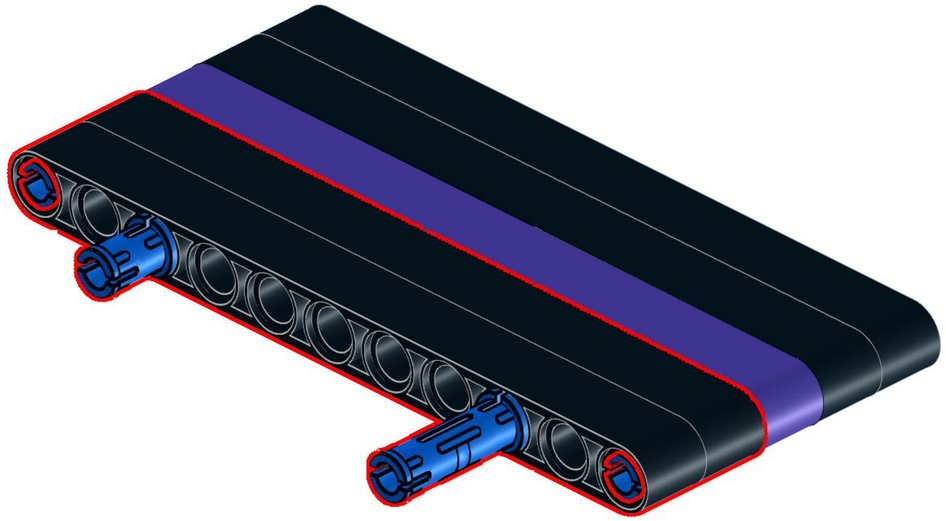

75

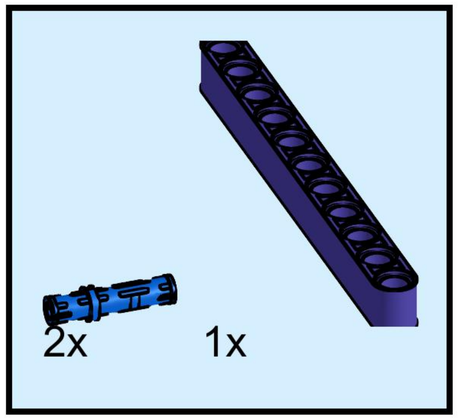

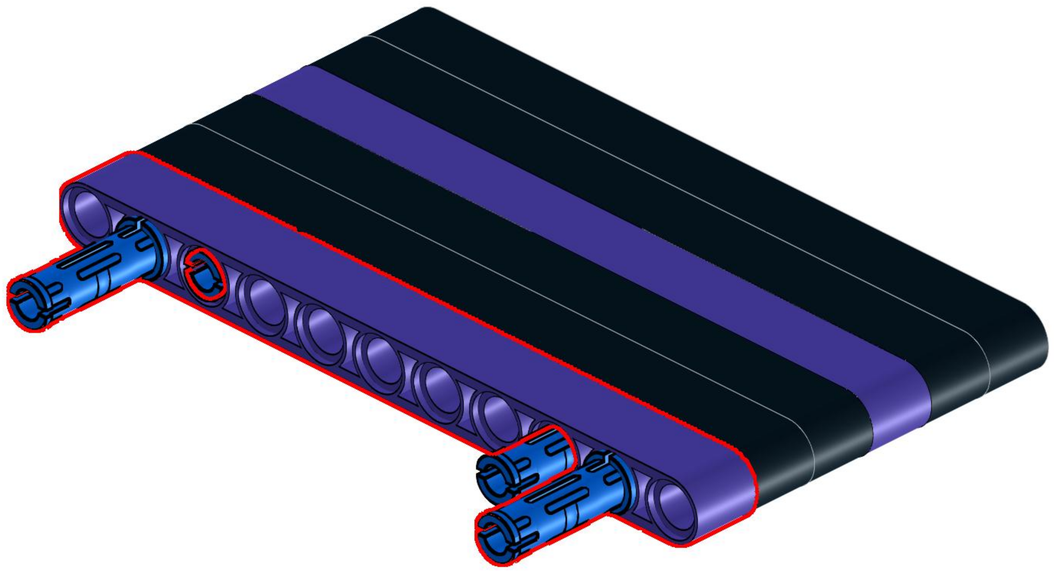

76

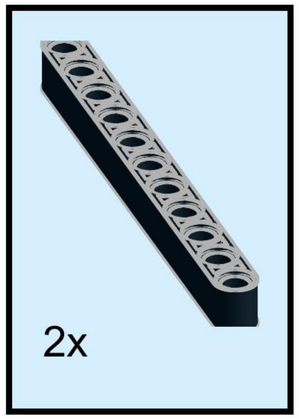

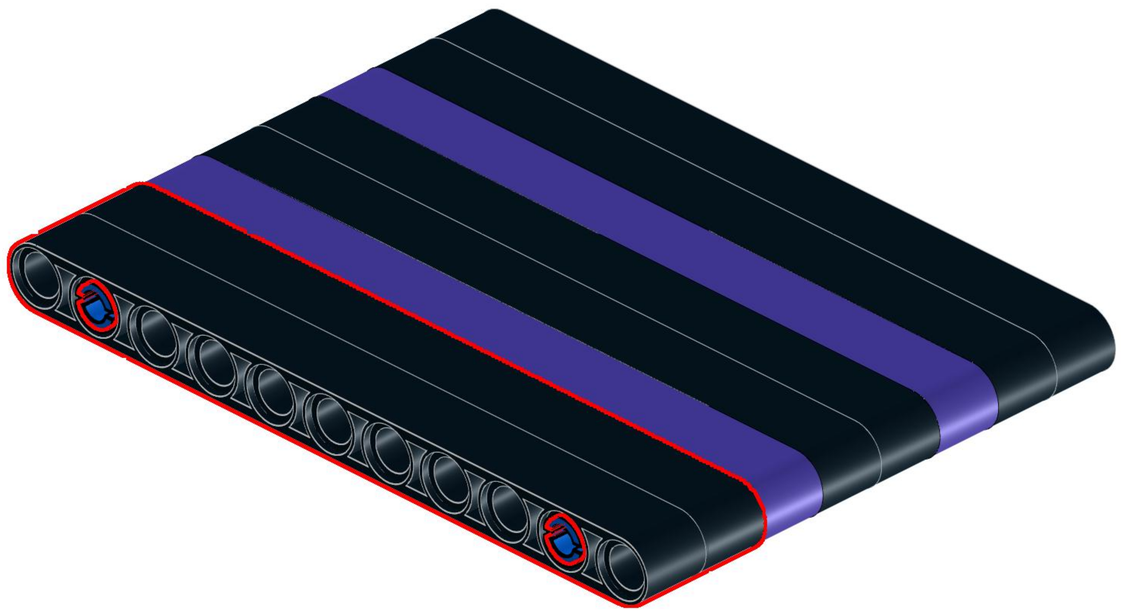

77

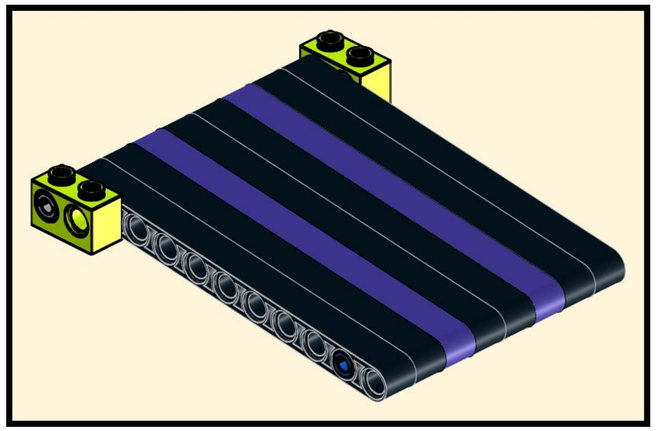

78

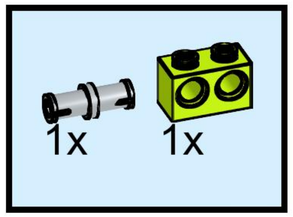

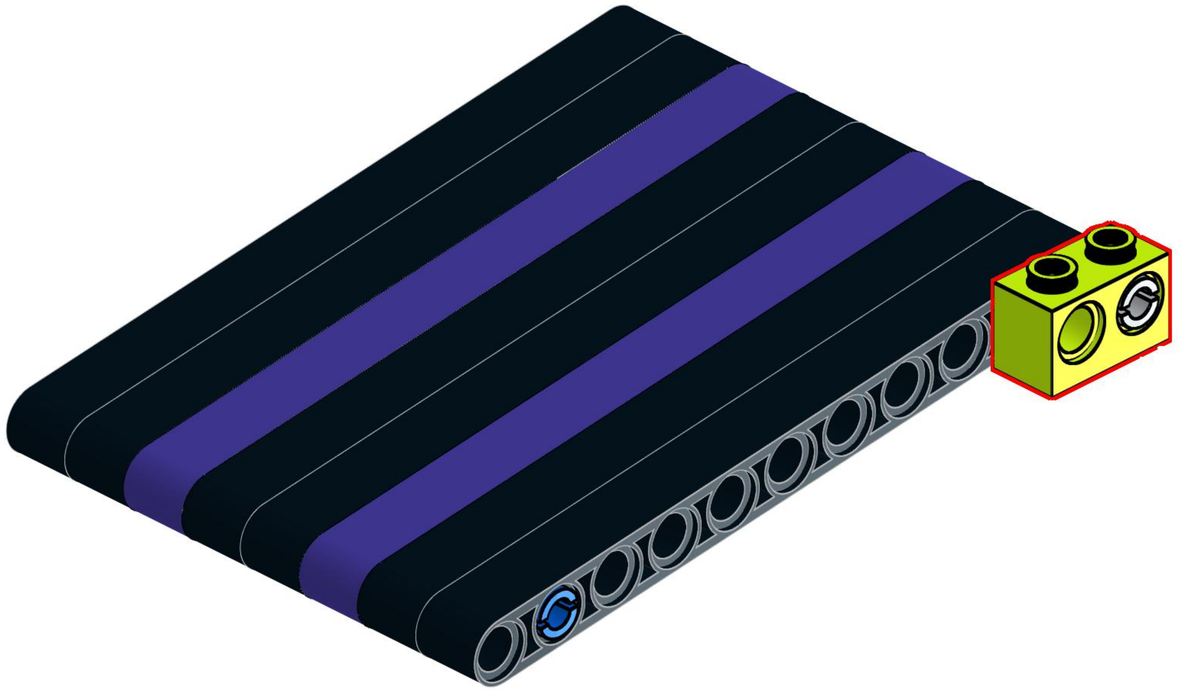

79

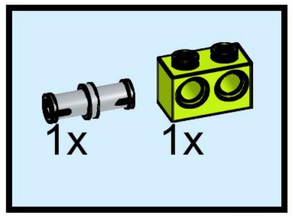

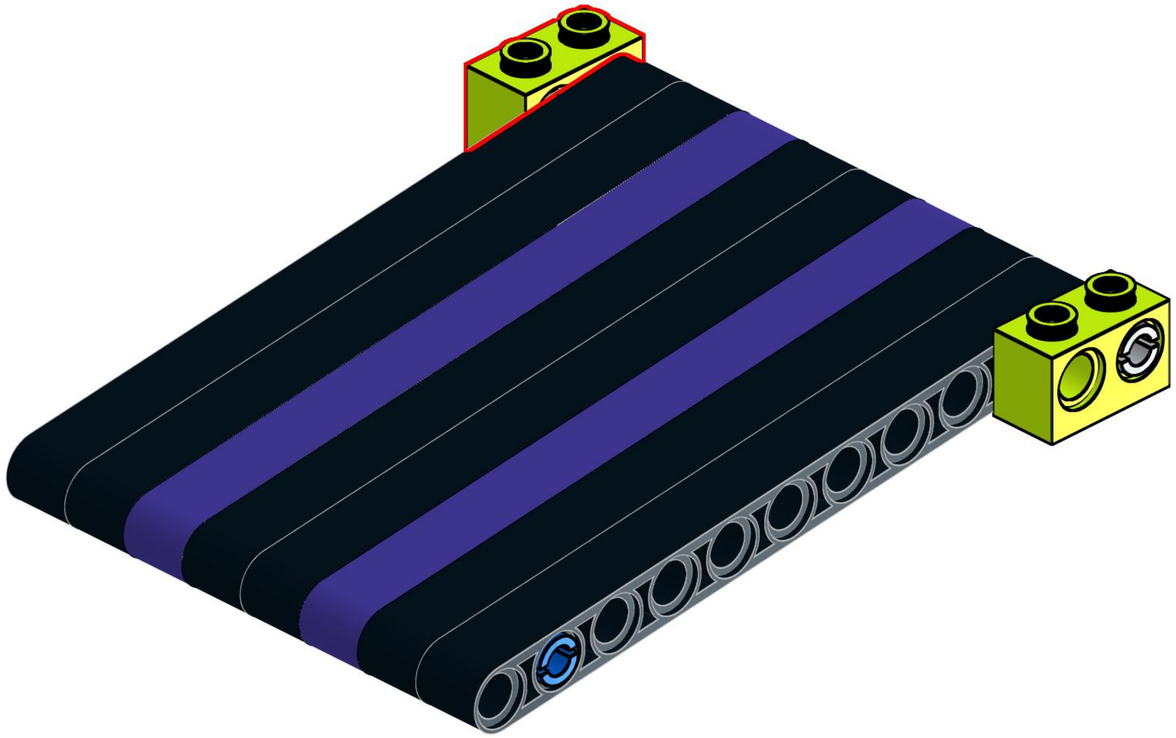

80

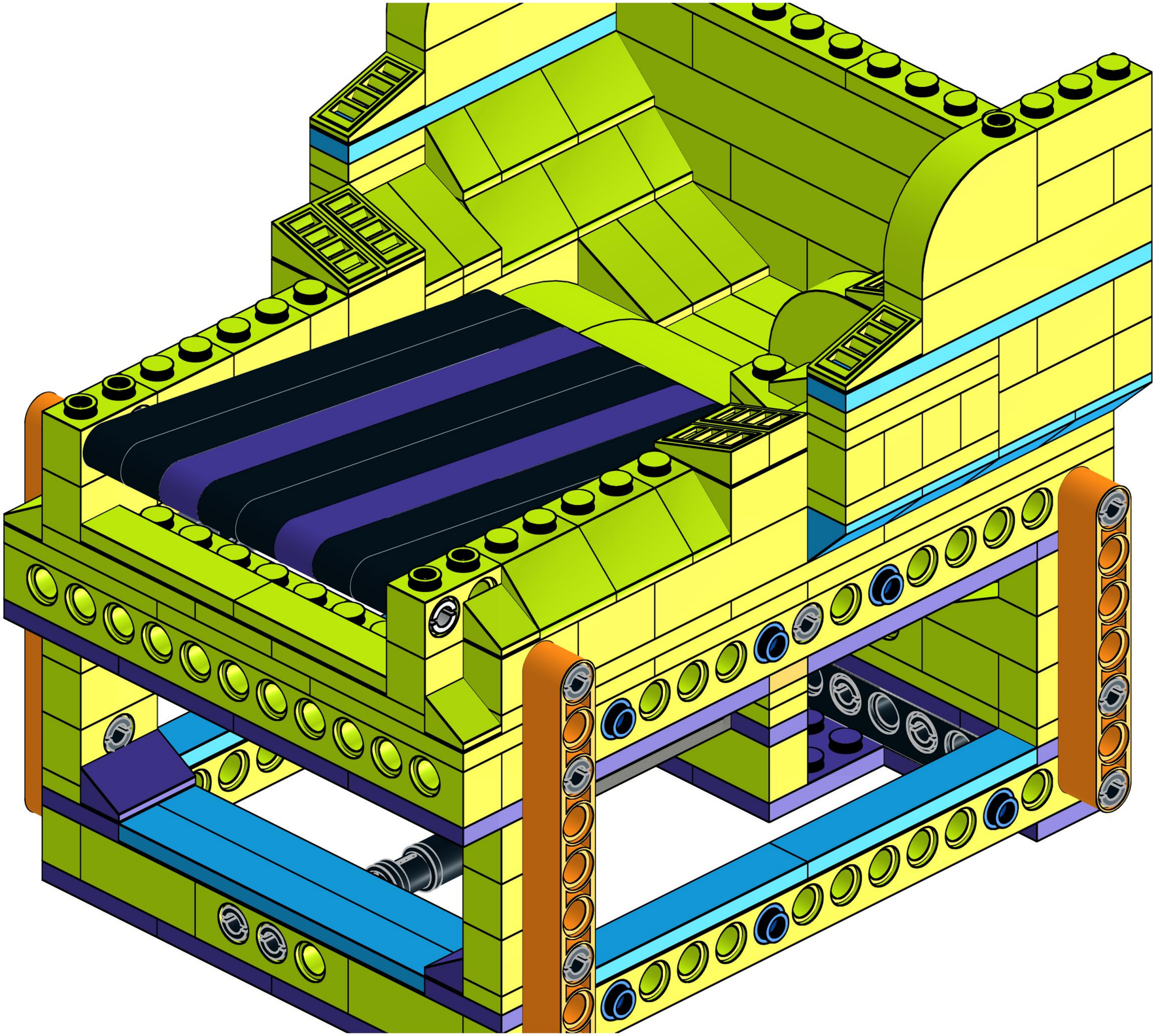

81

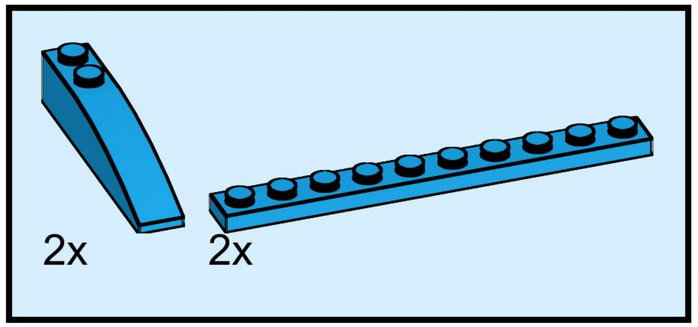

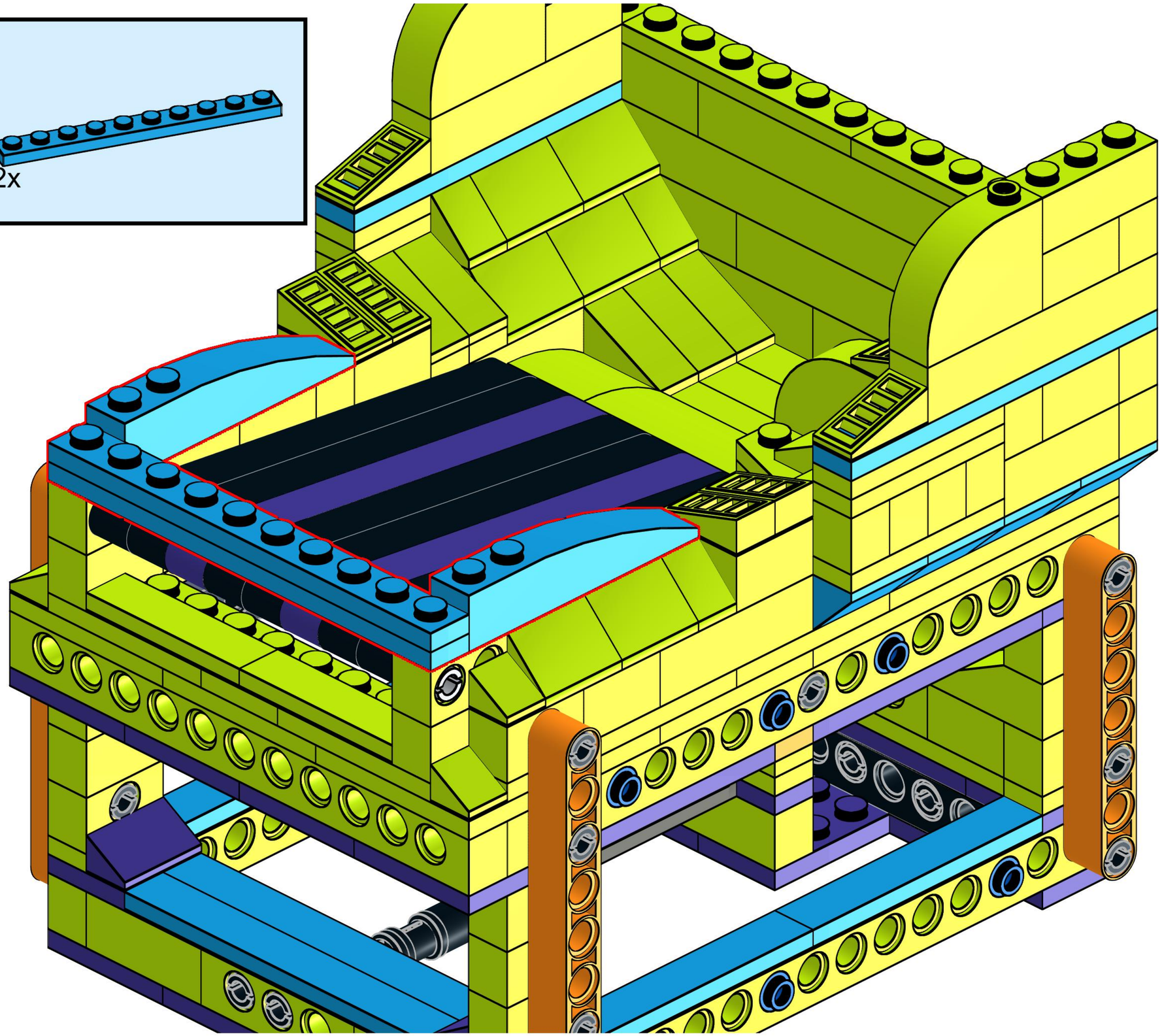

82

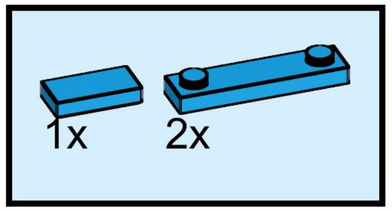

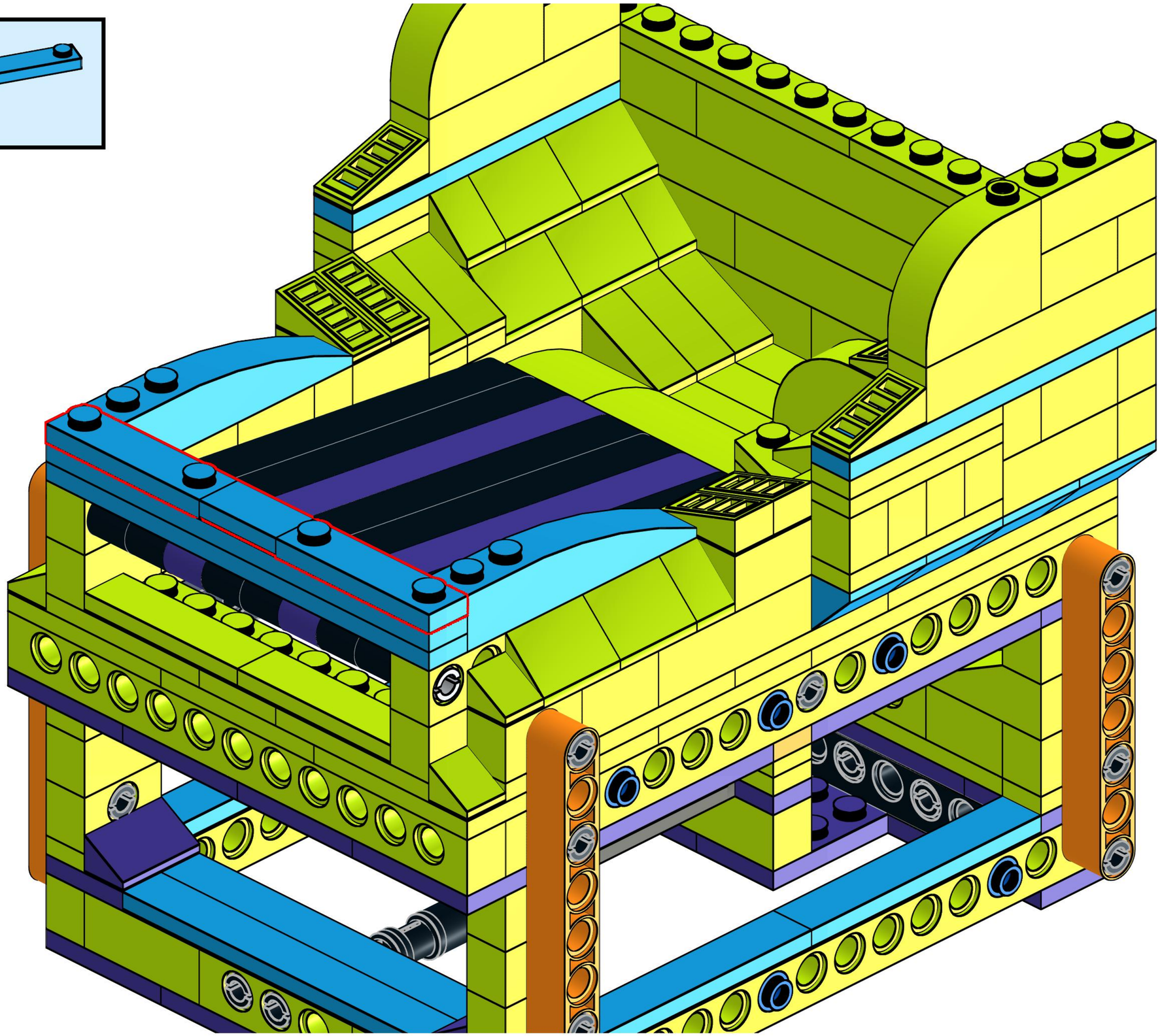

83

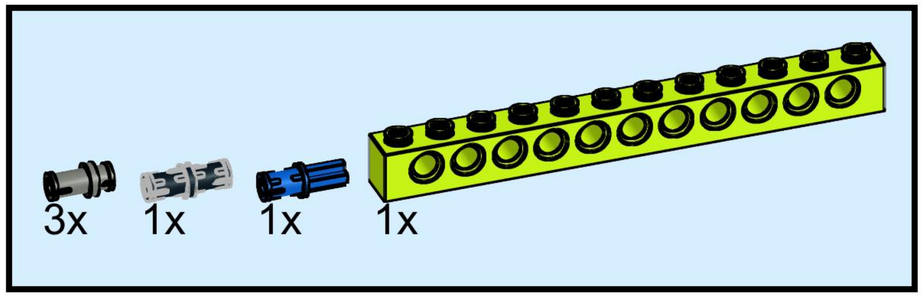

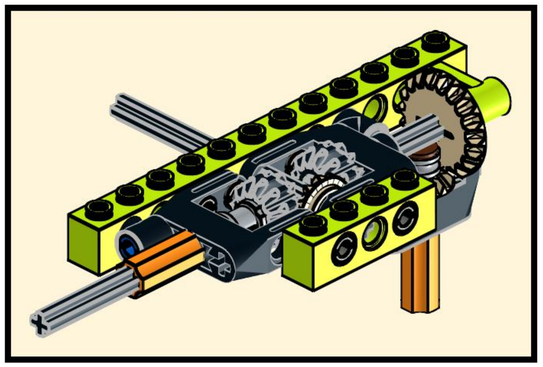

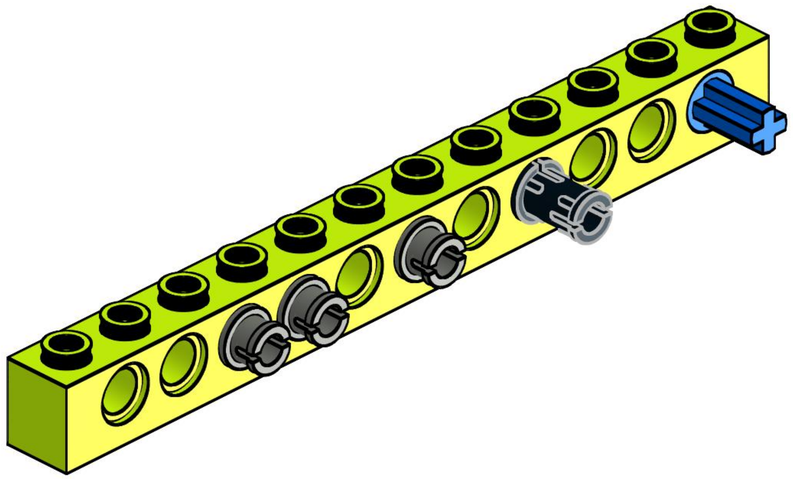

84

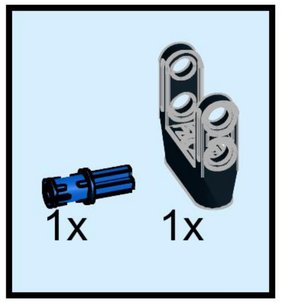

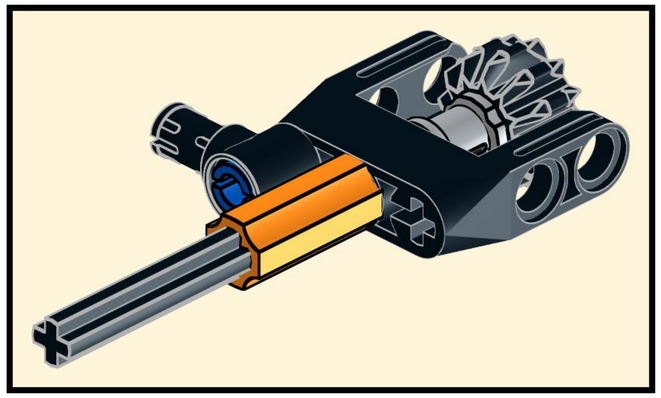

85

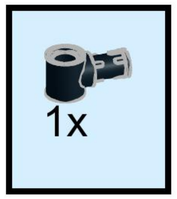

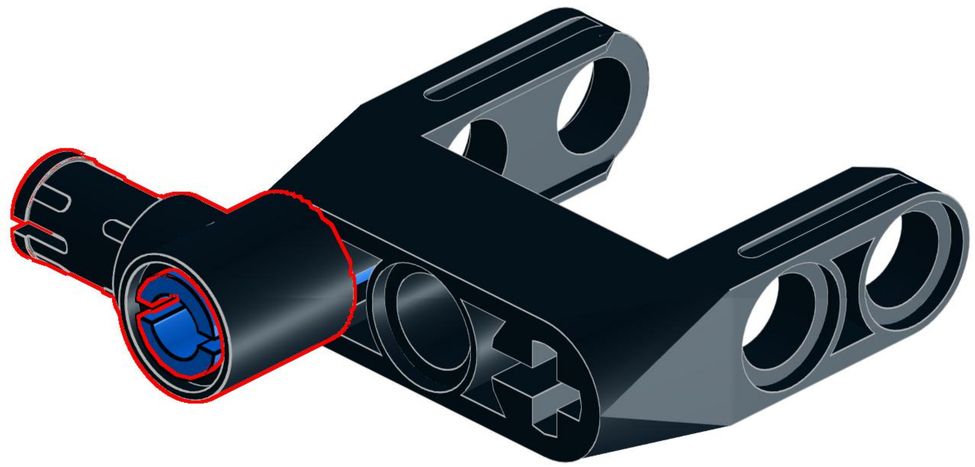

86

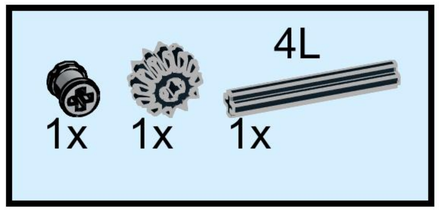

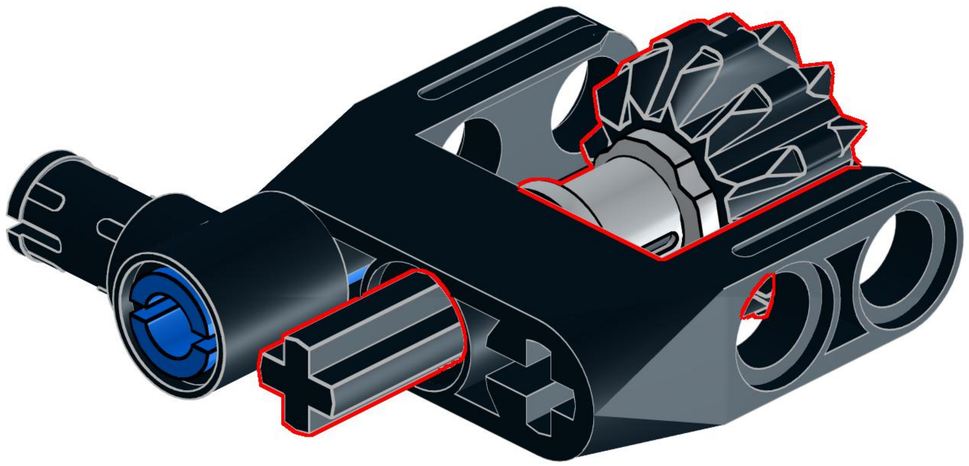

87

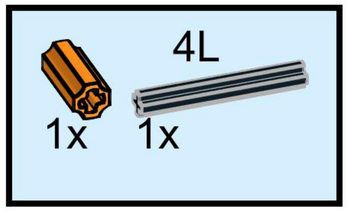

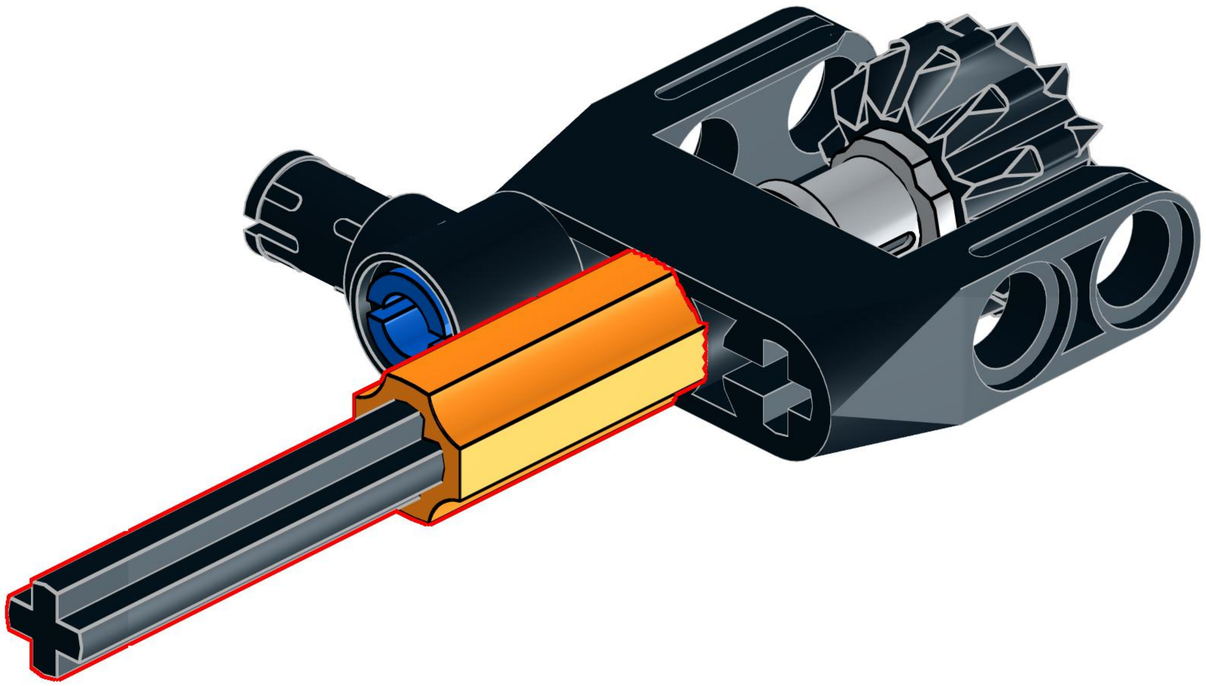

88

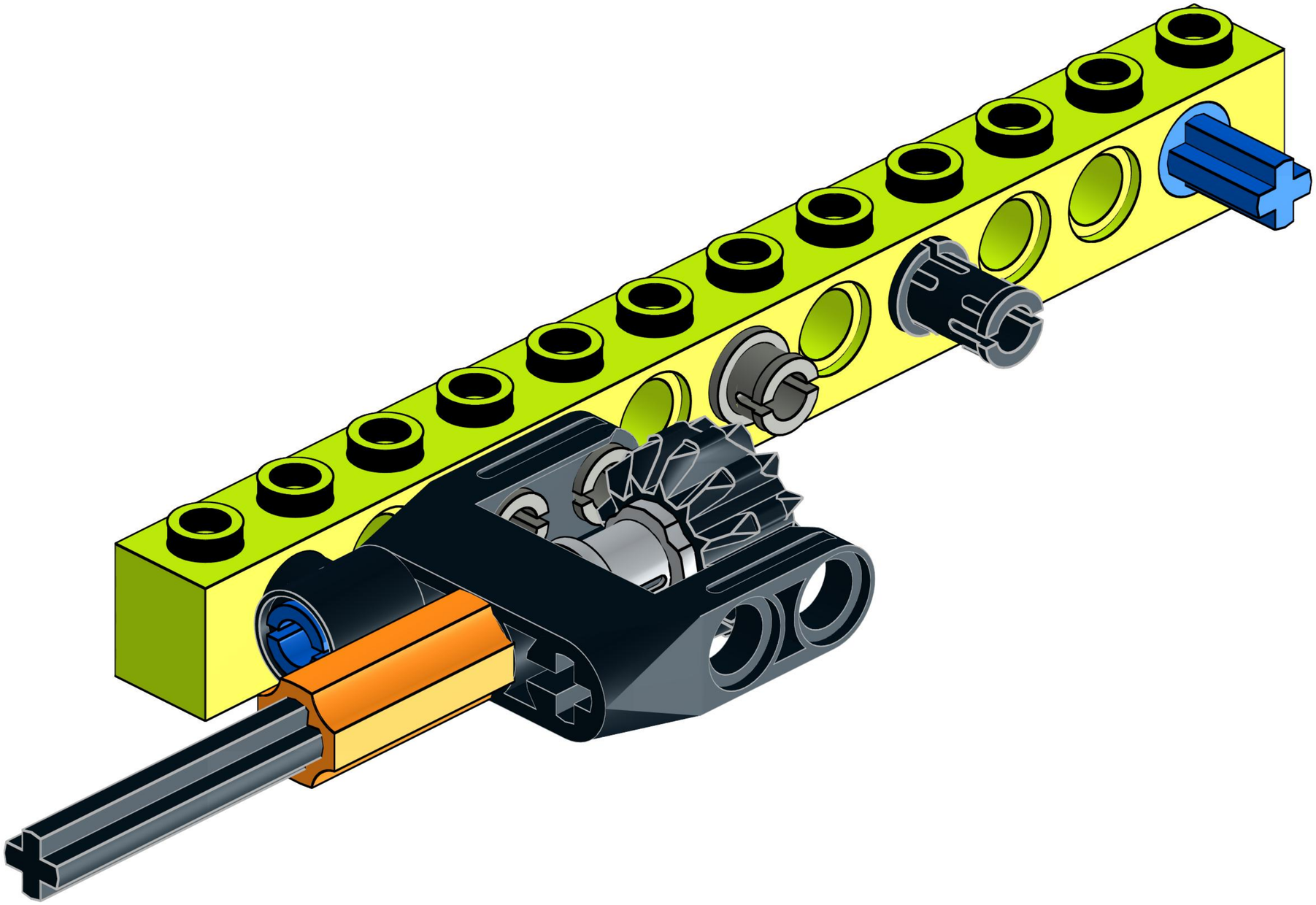

89

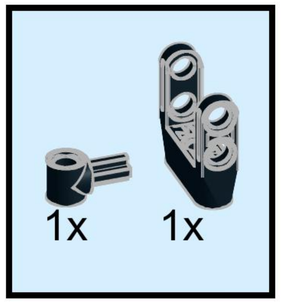

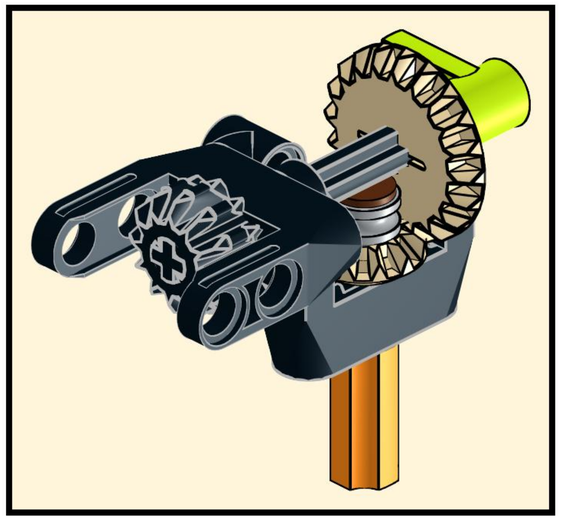

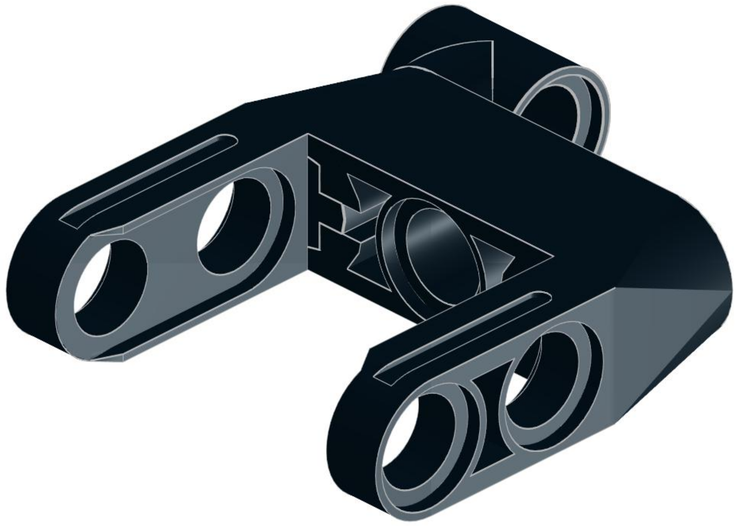

90

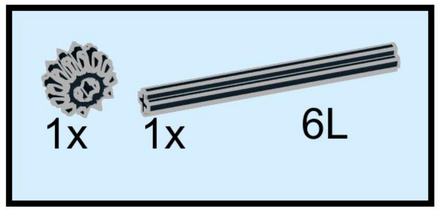

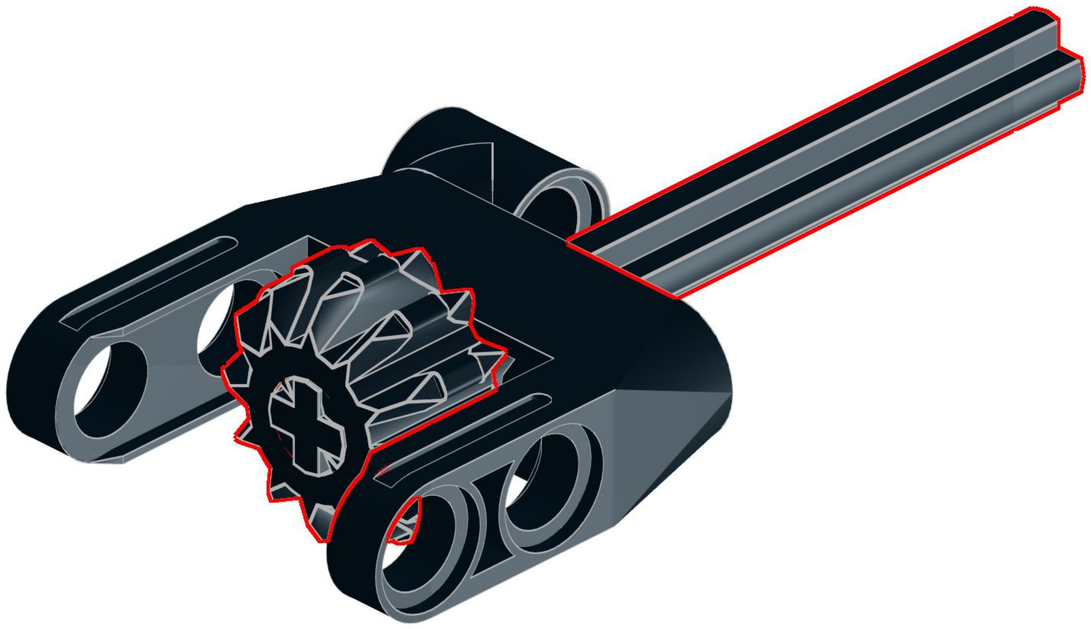

91

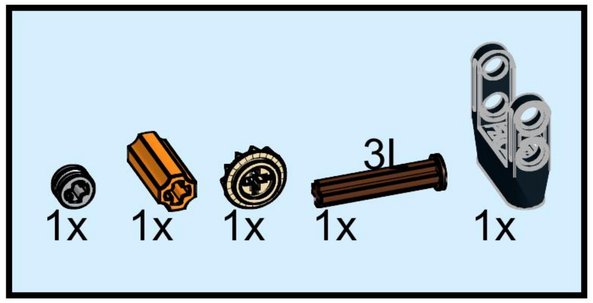

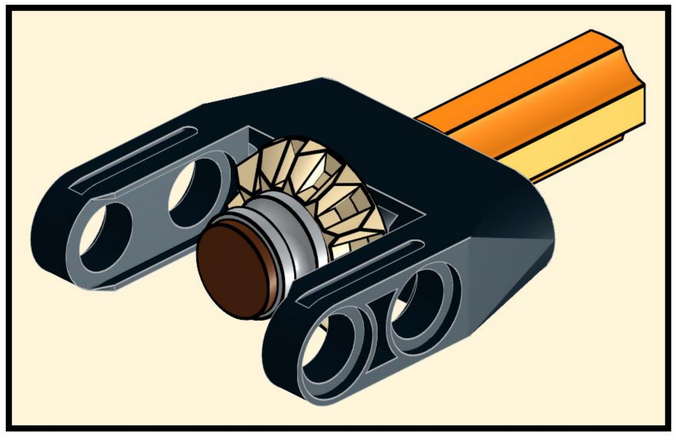

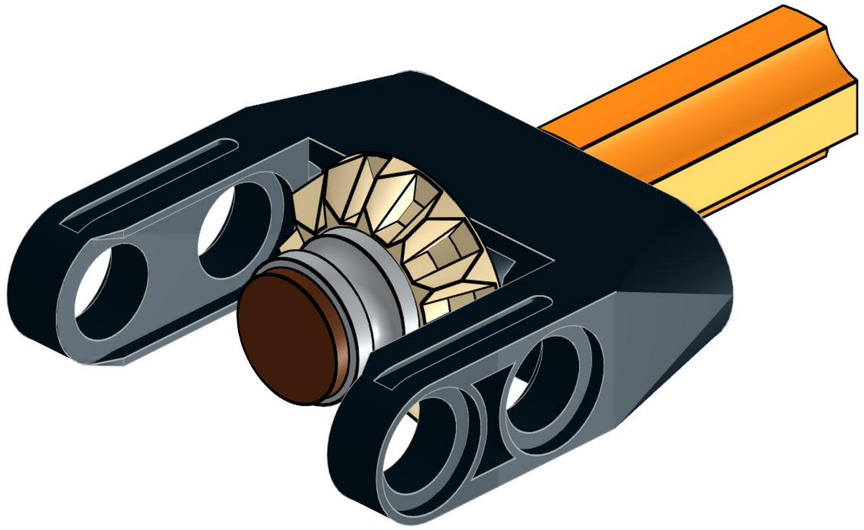

92

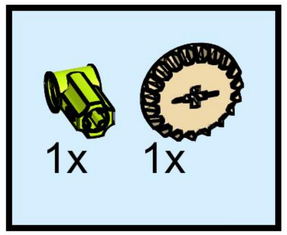

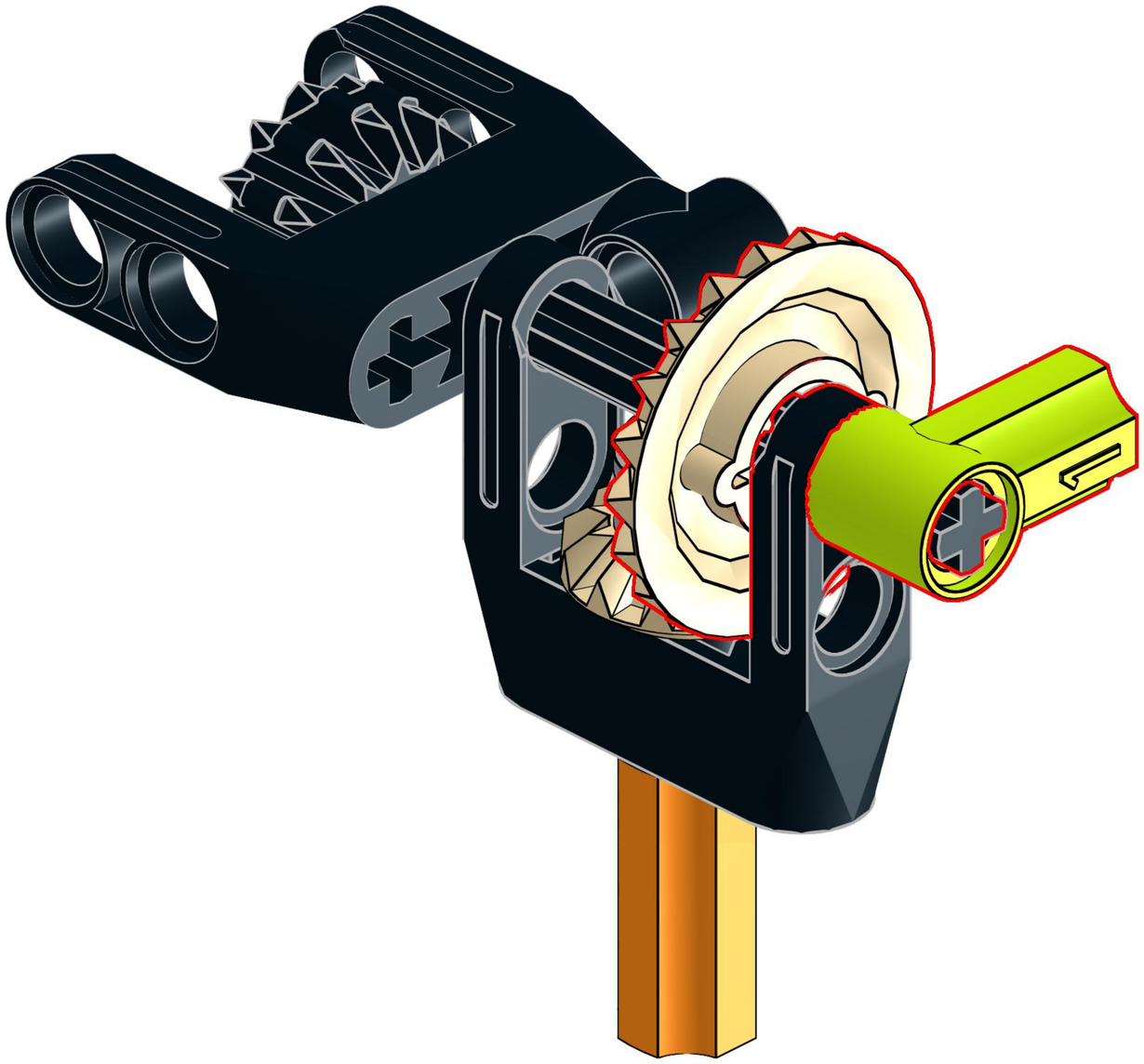

93

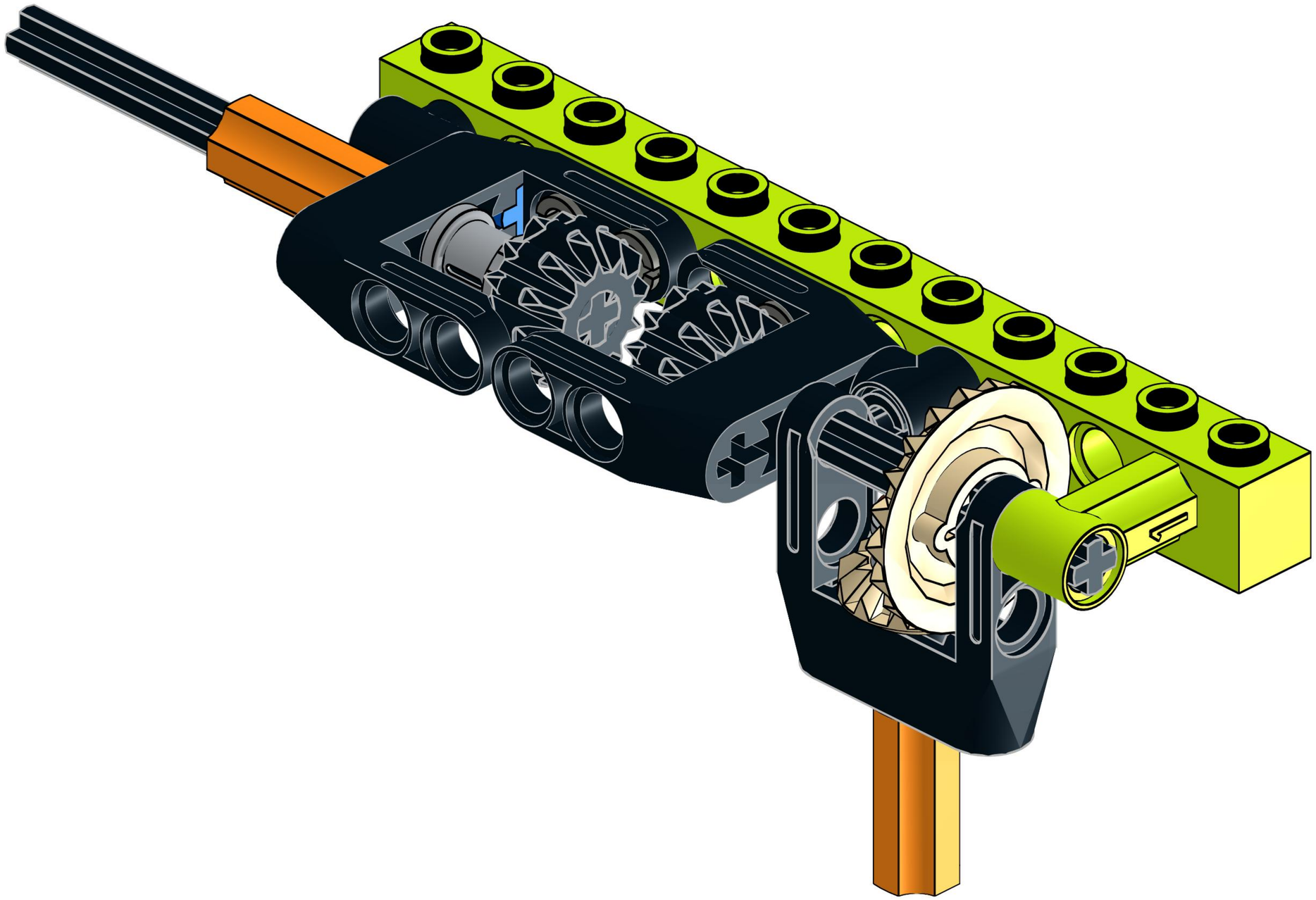

94

2x

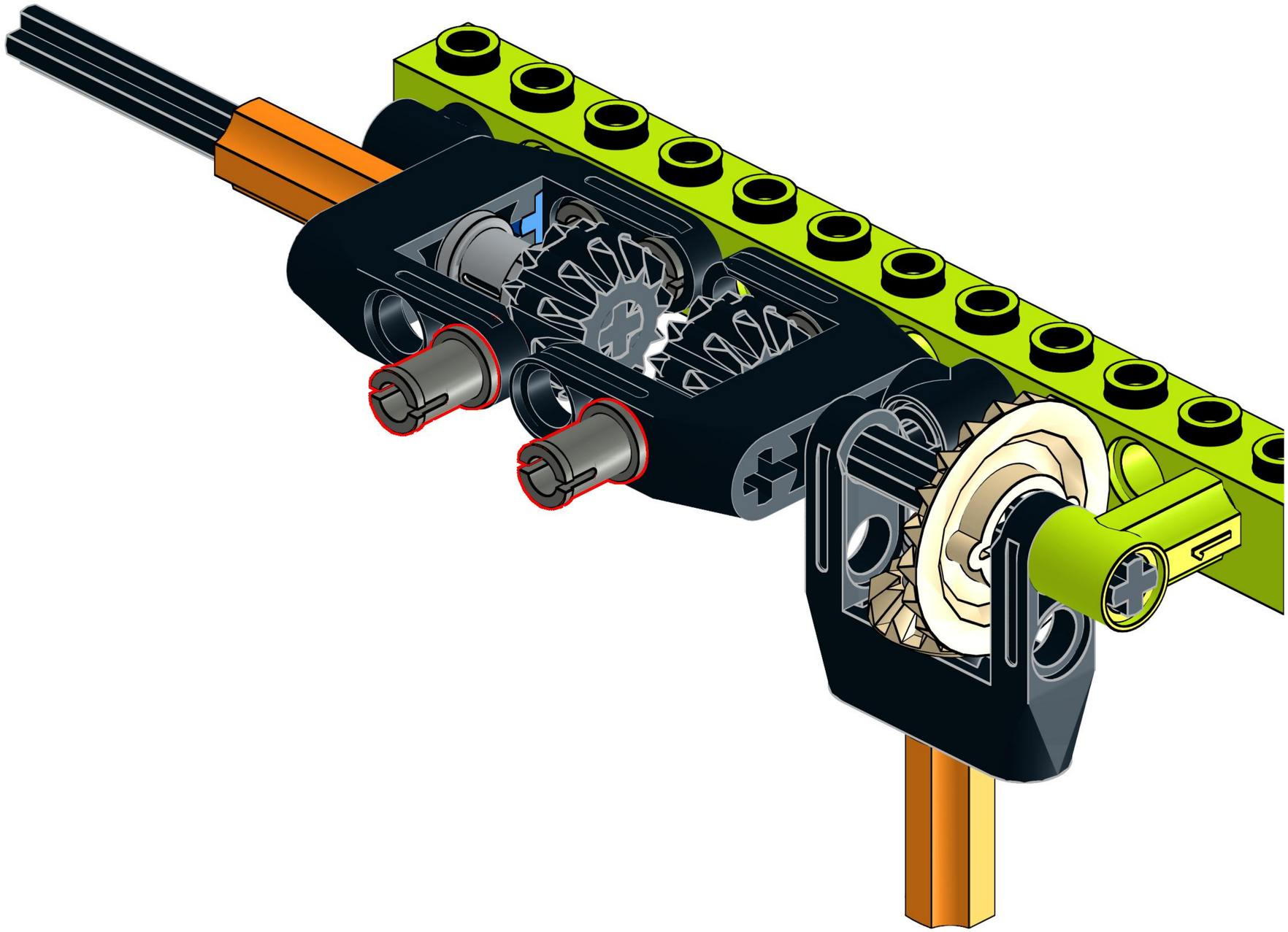

95

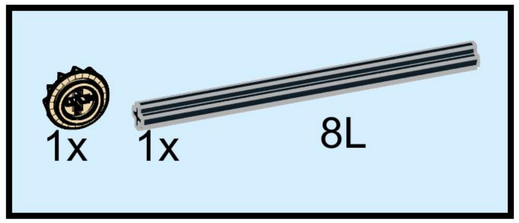

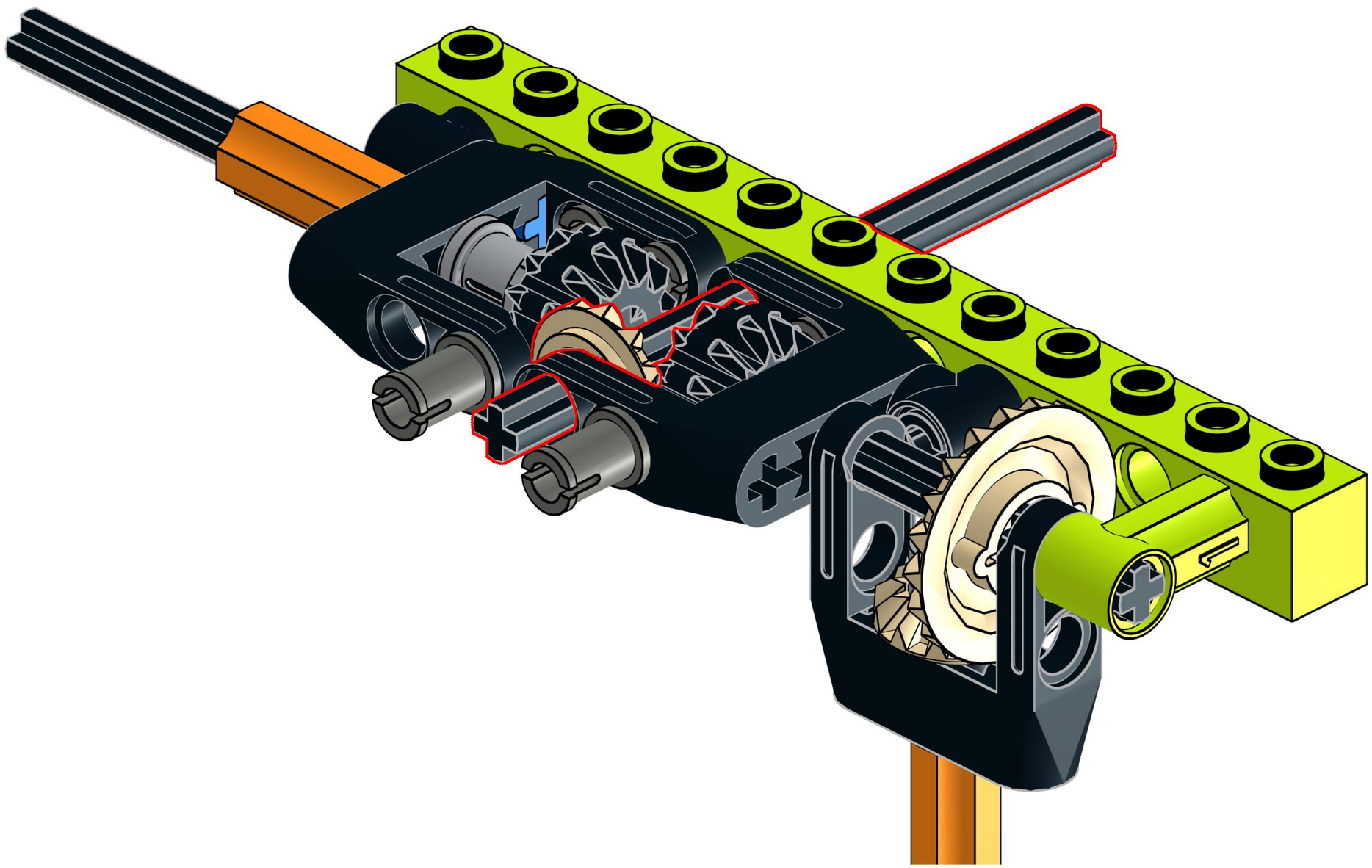

96

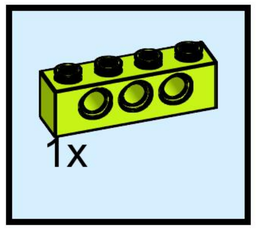

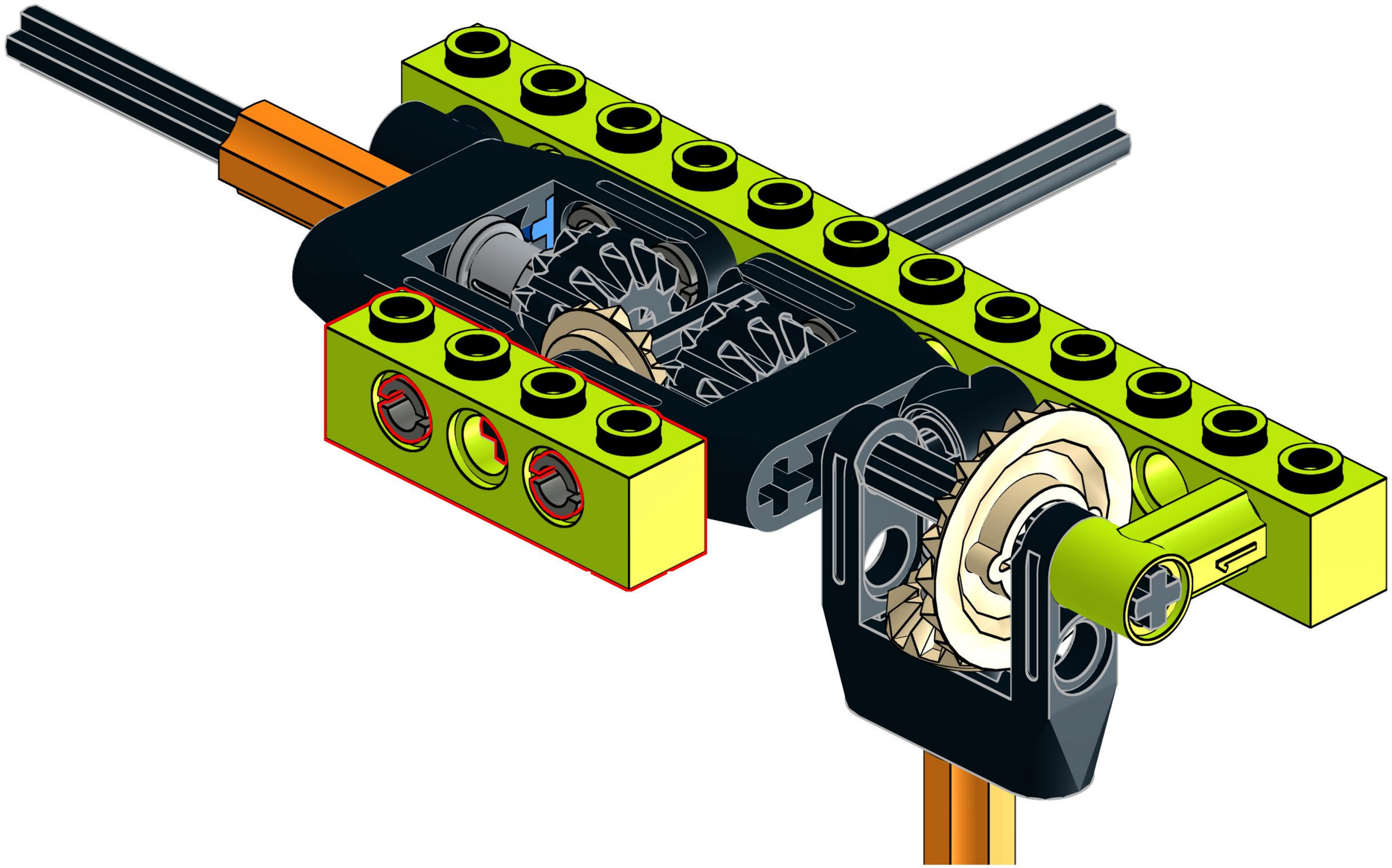

97

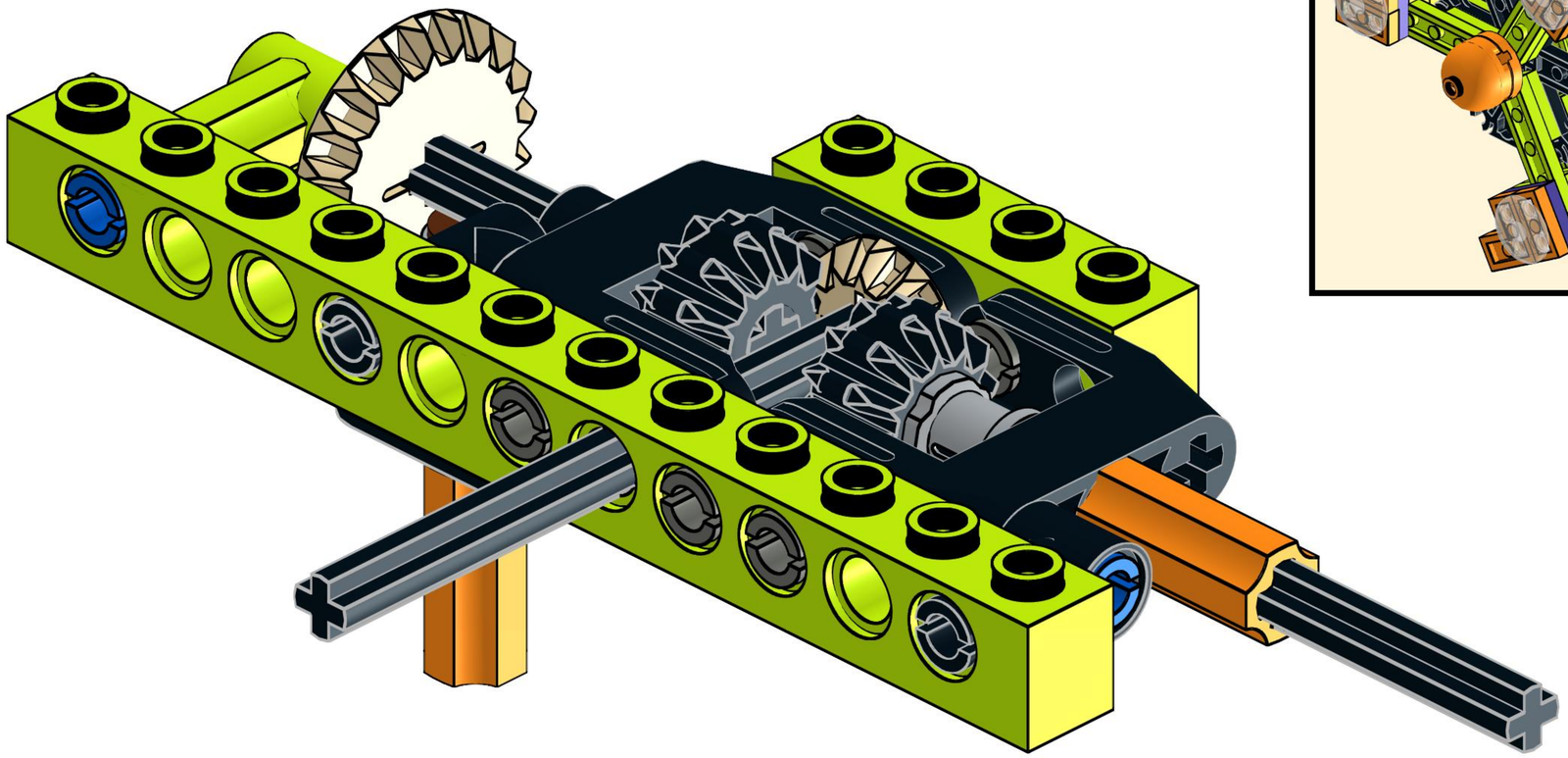

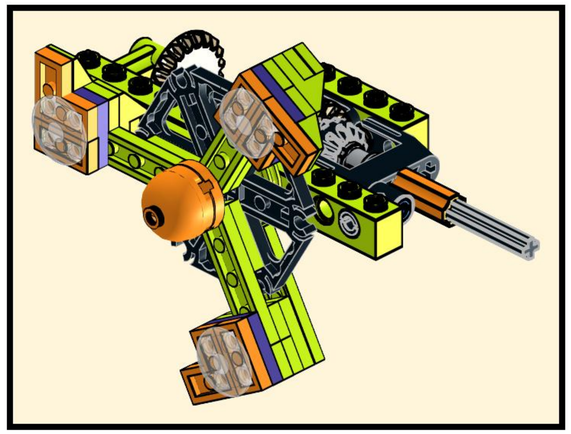

98

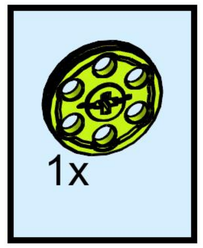

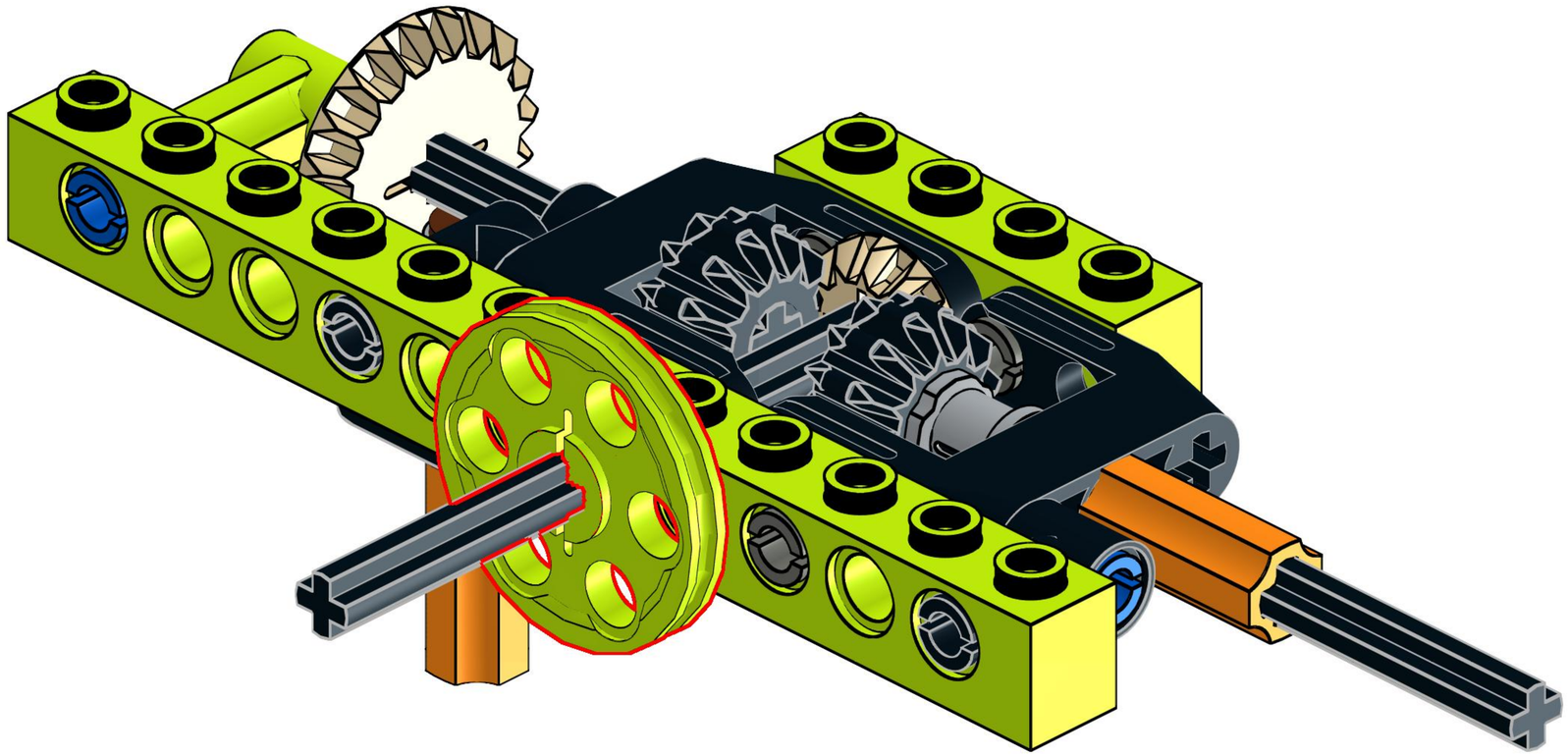

99

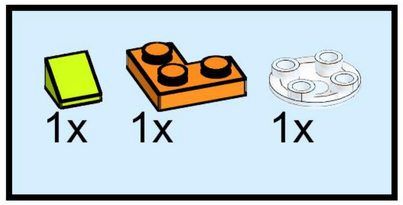

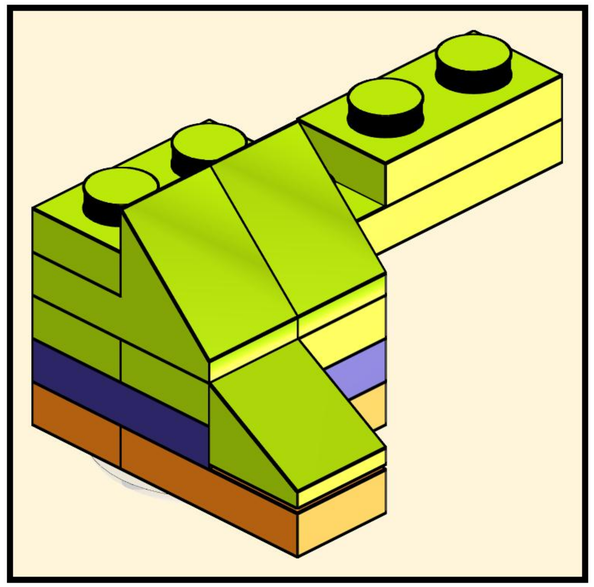

3x

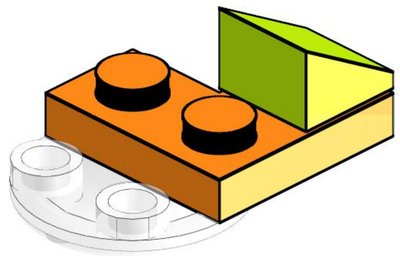

100

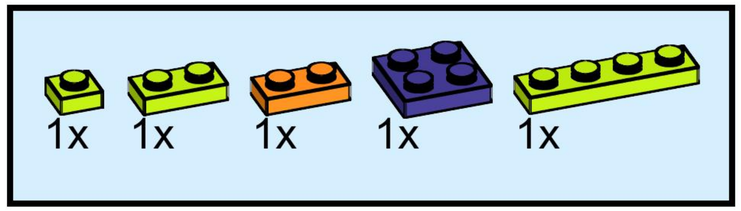

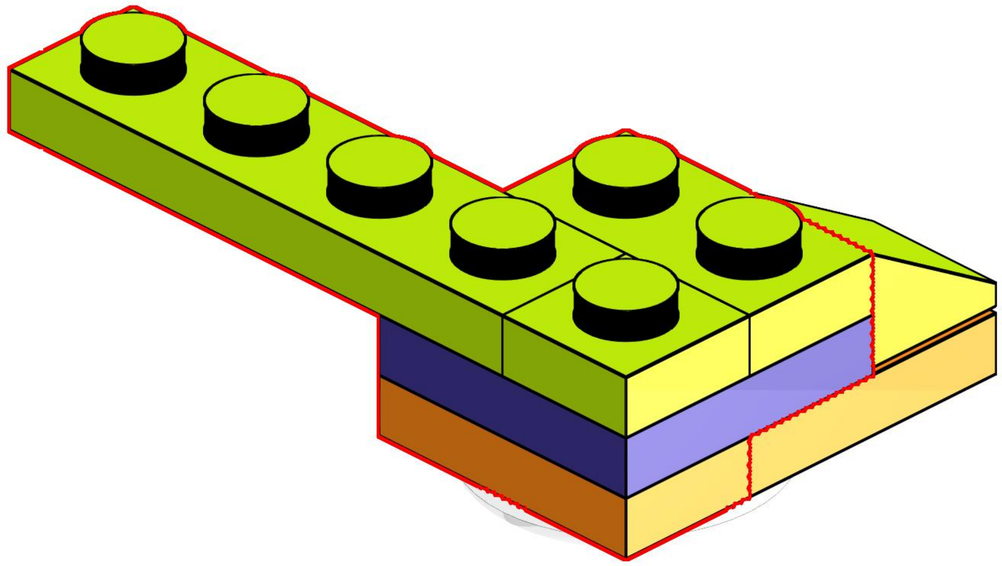

101

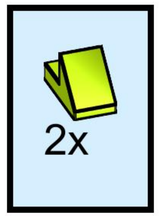

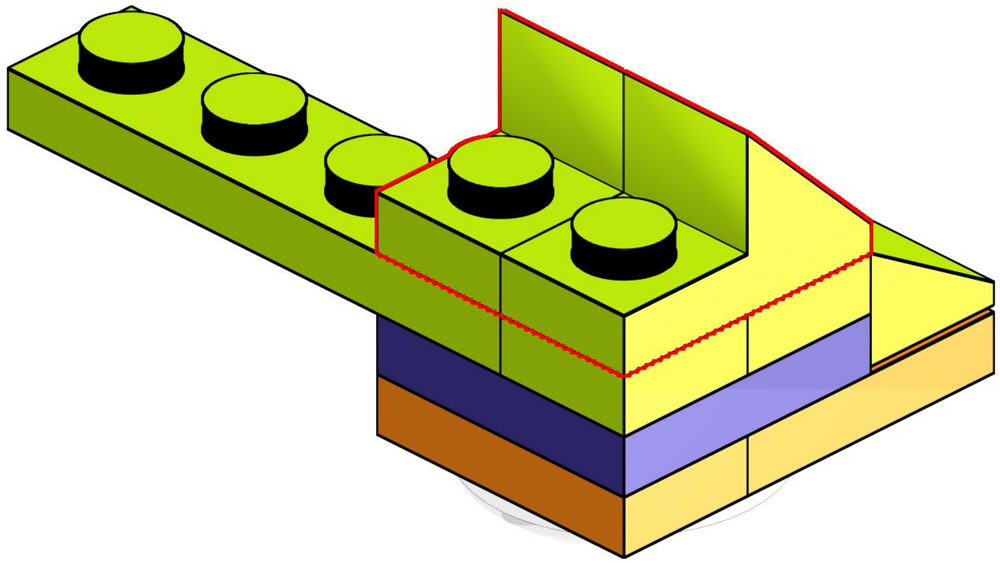

102

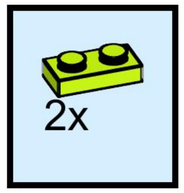

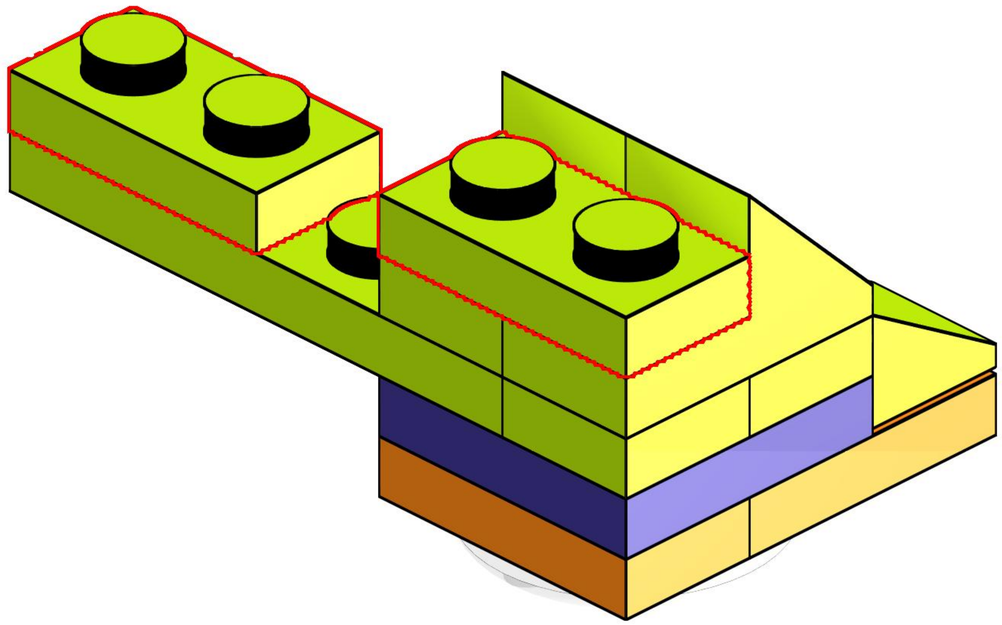

103

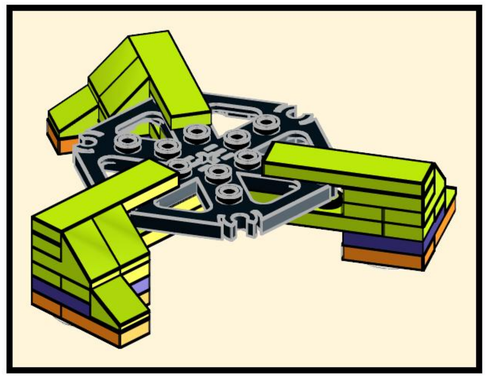

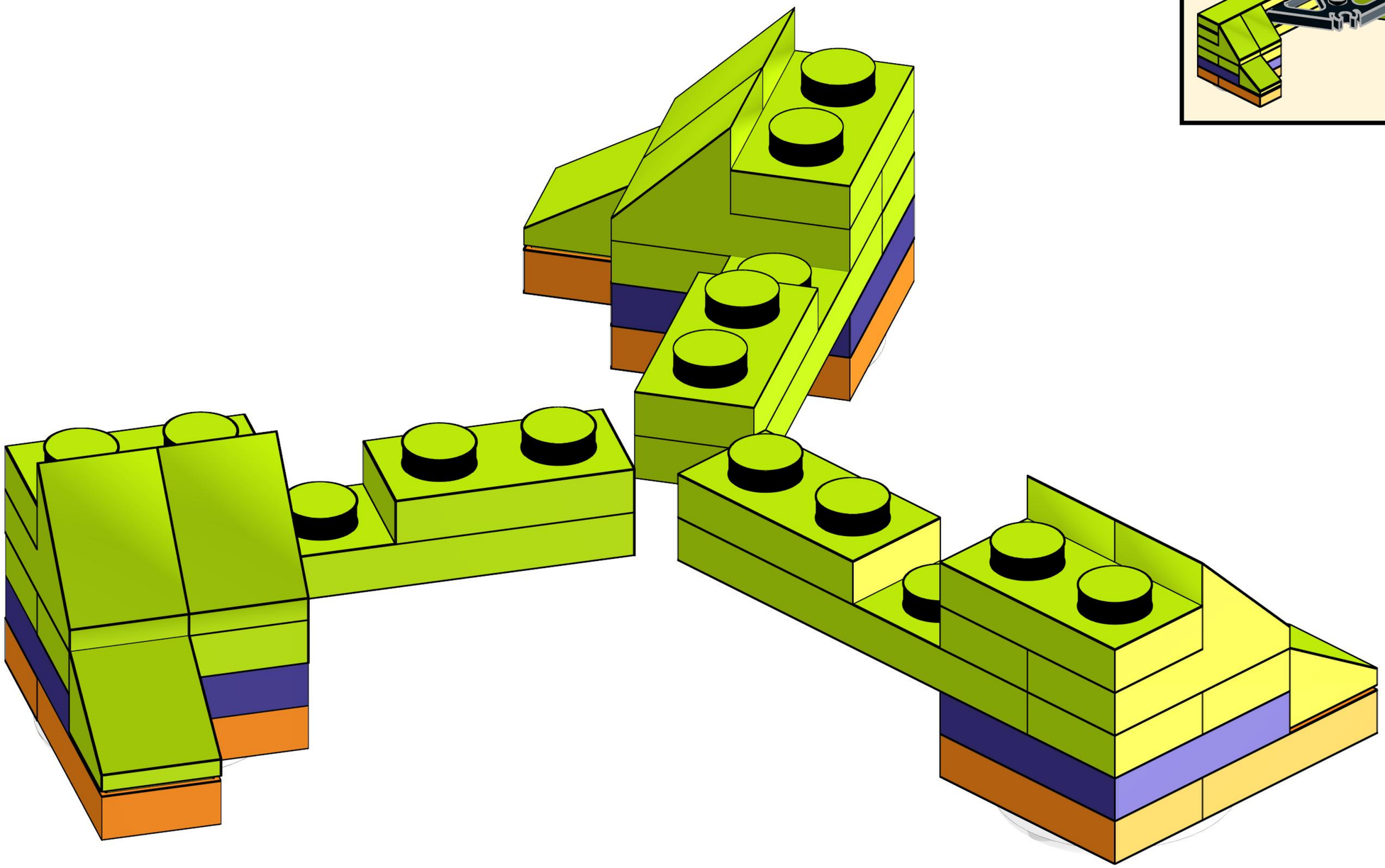

104

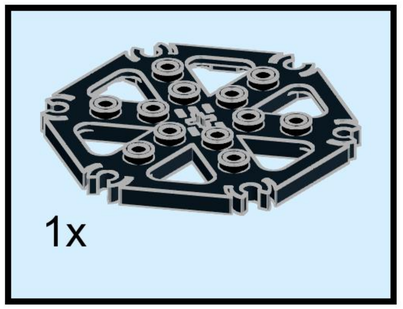

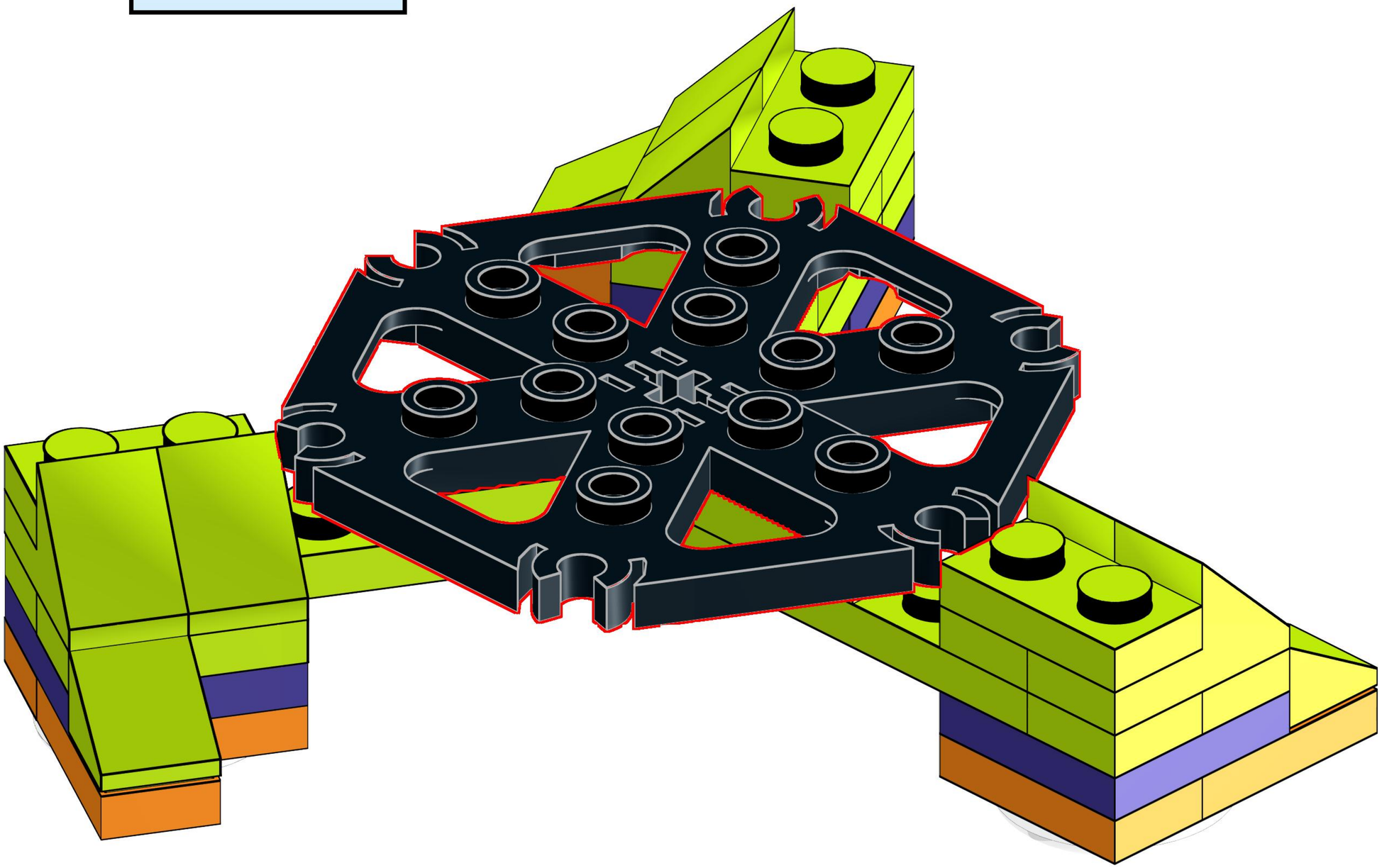

105

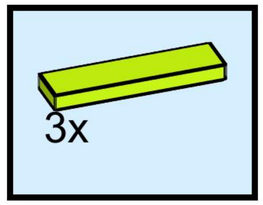

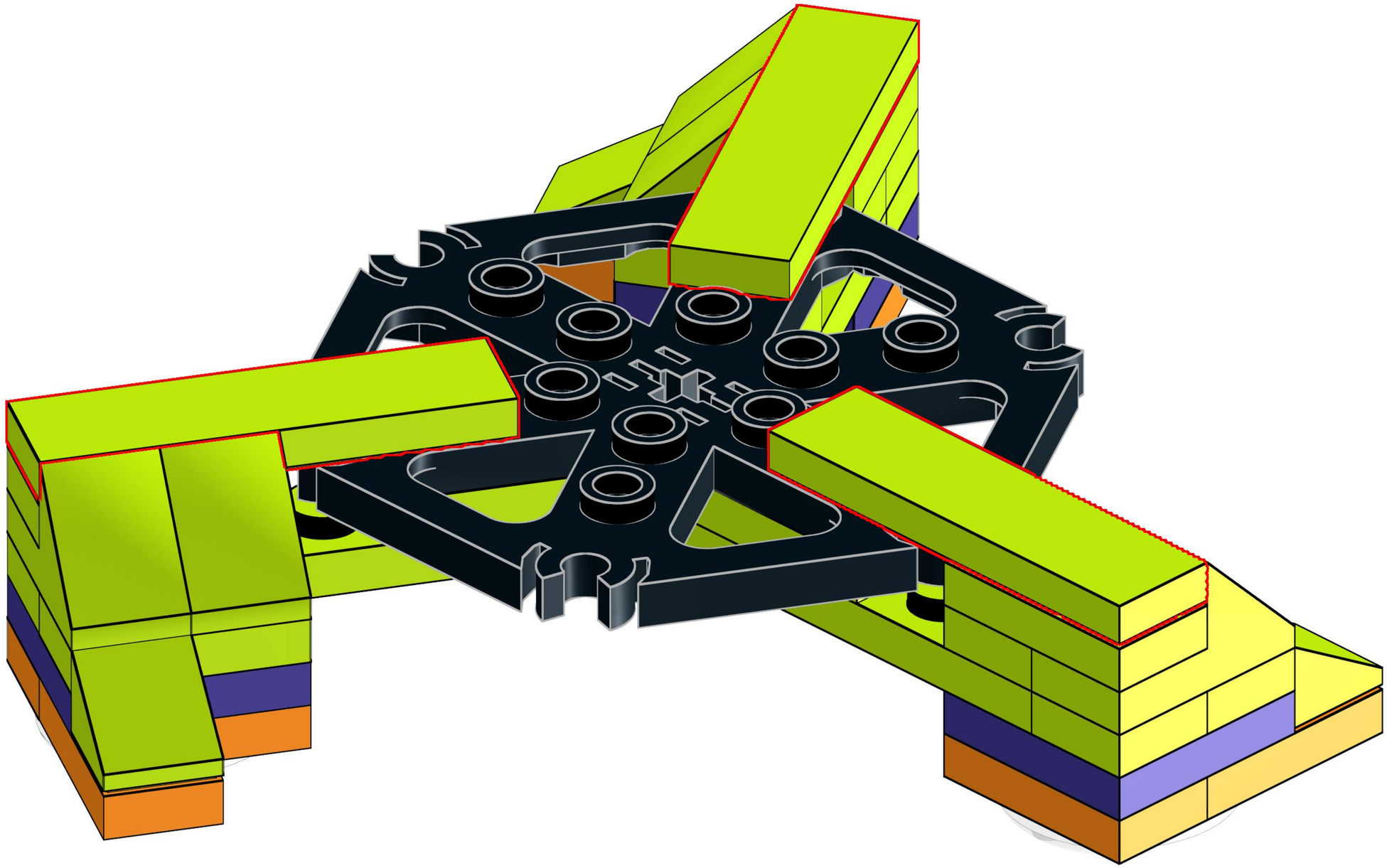

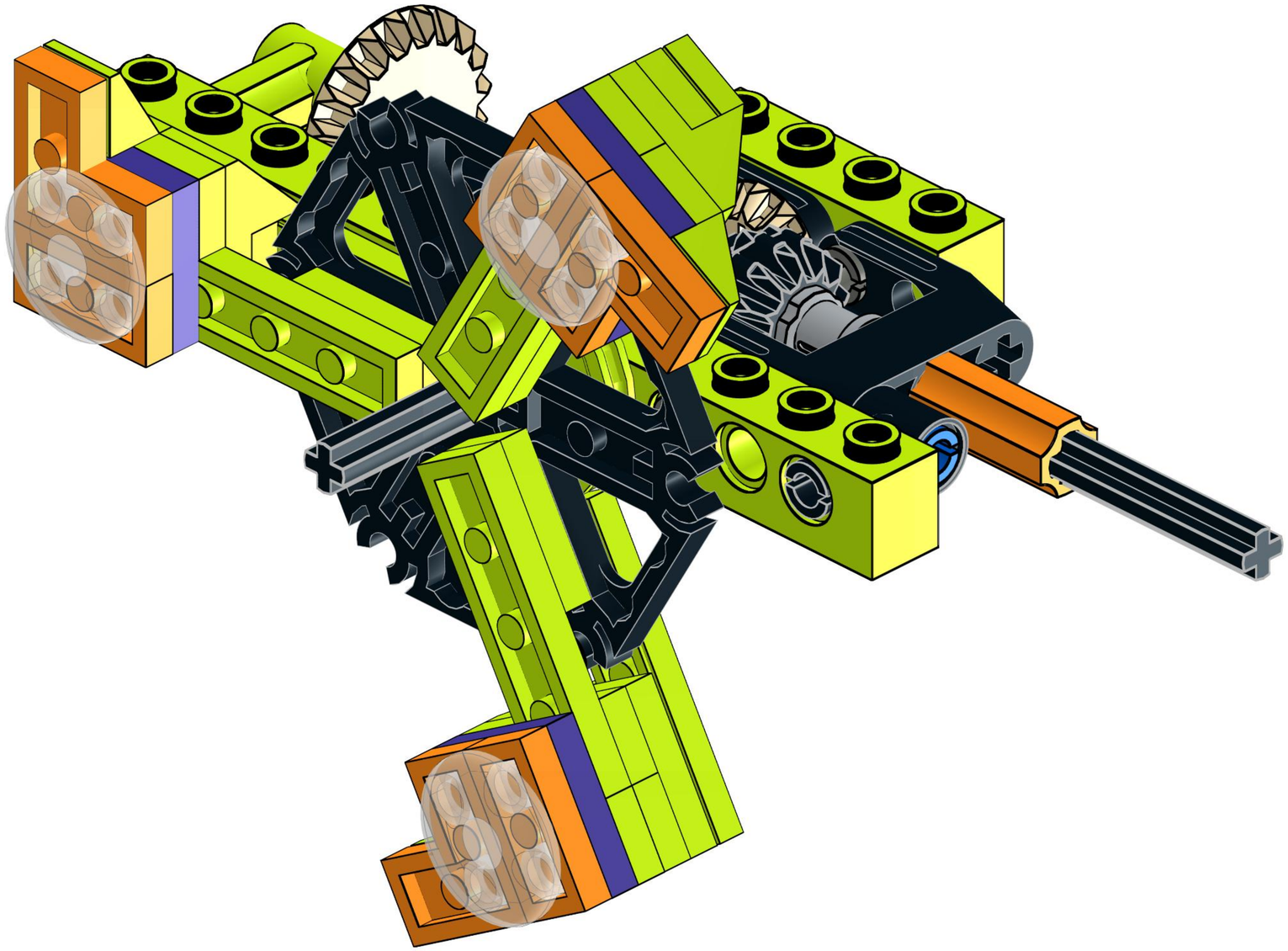

107

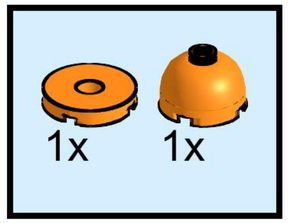

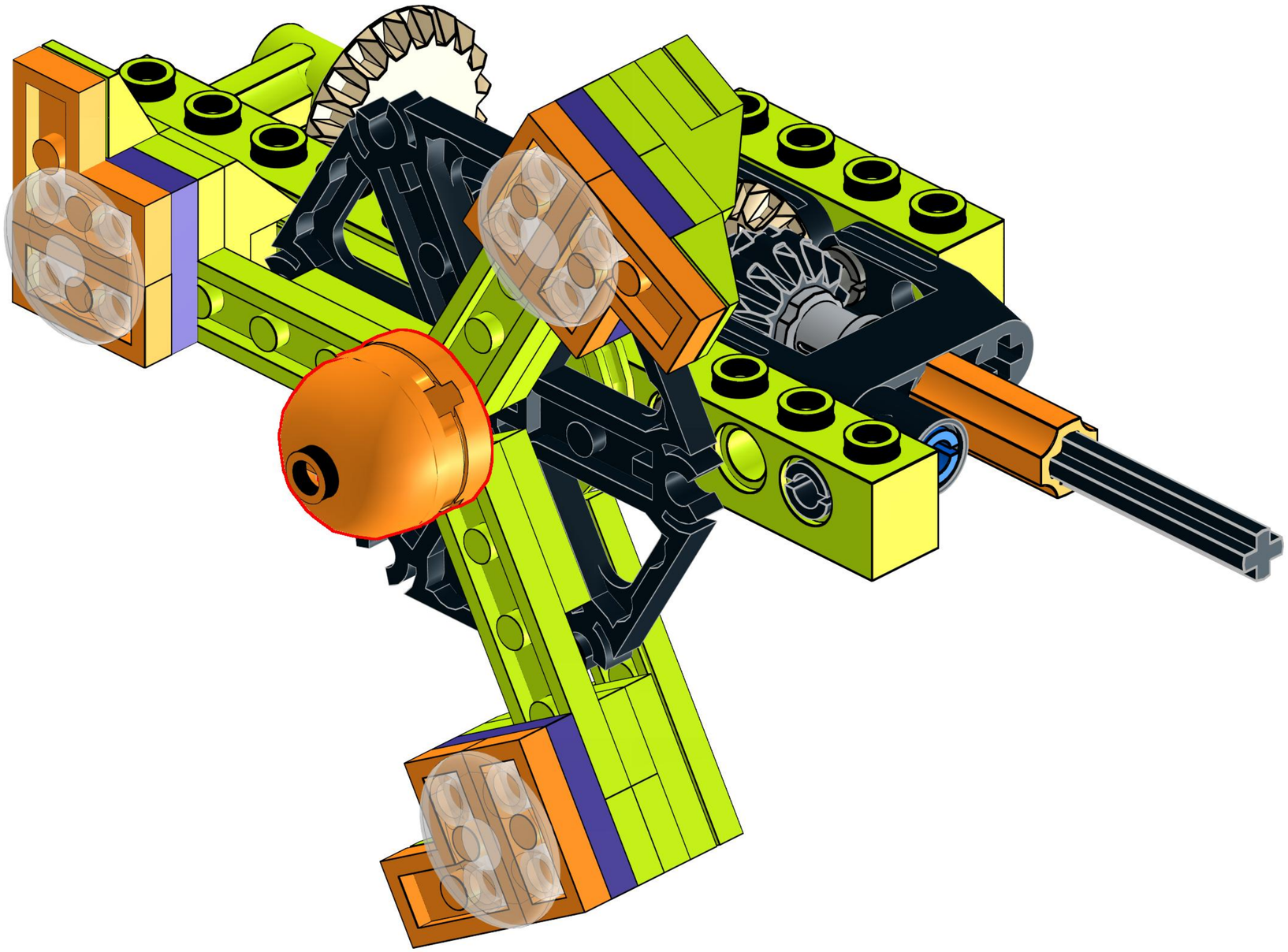

108

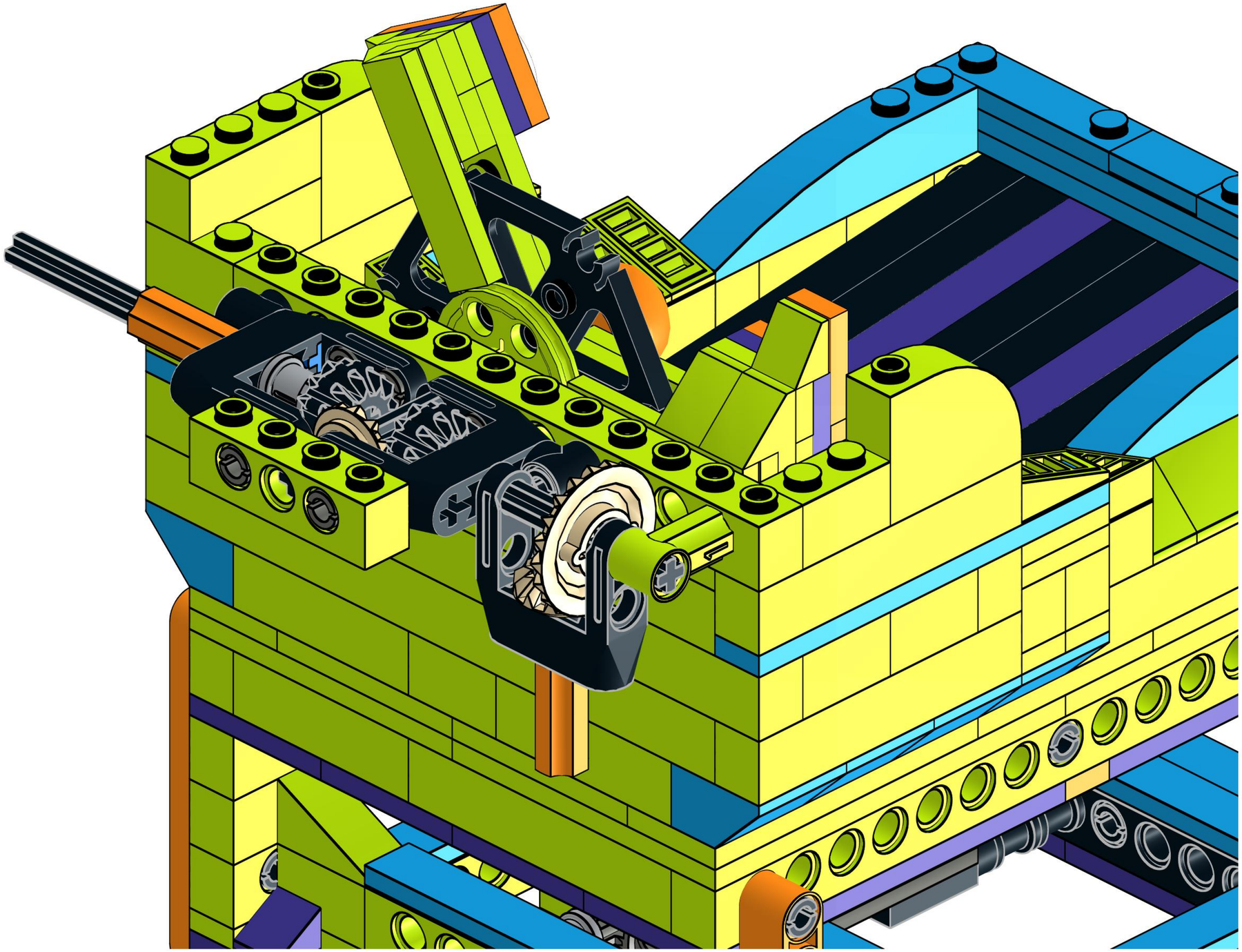

109

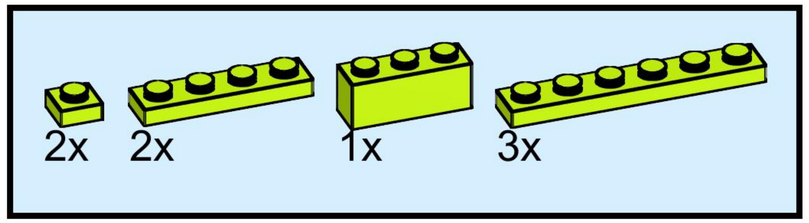

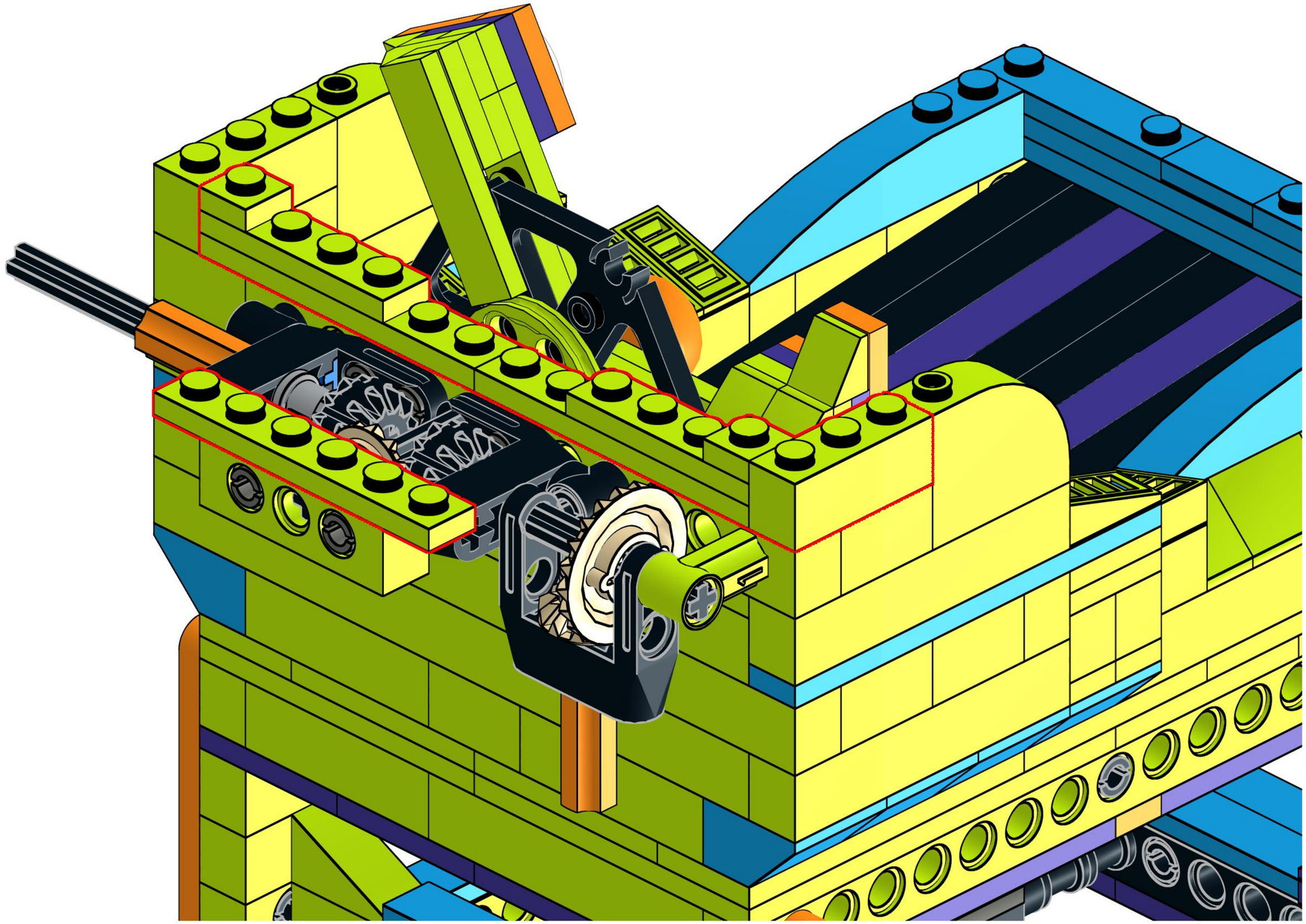

110

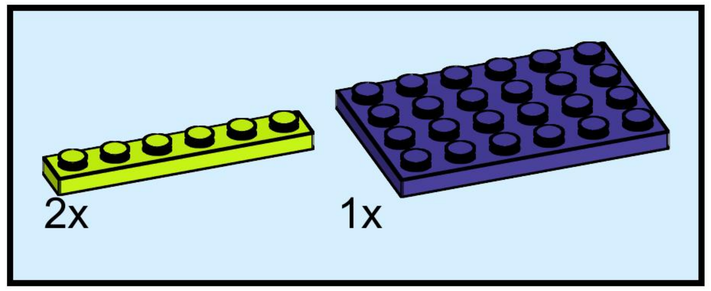

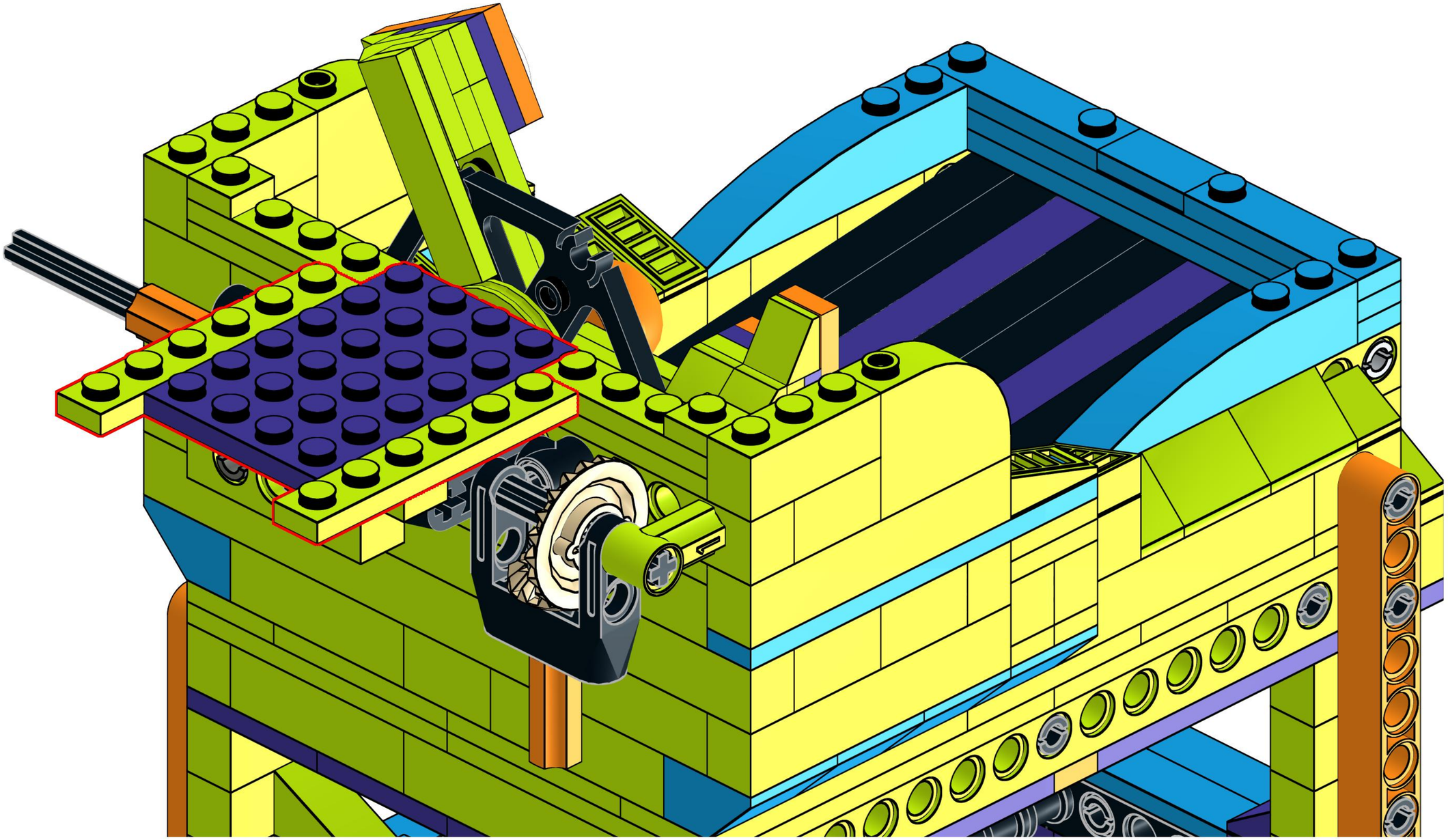

111

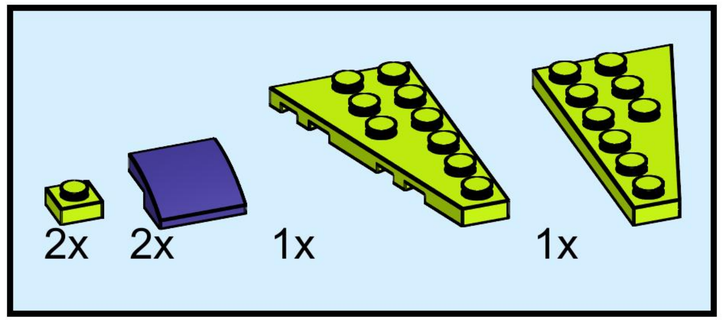

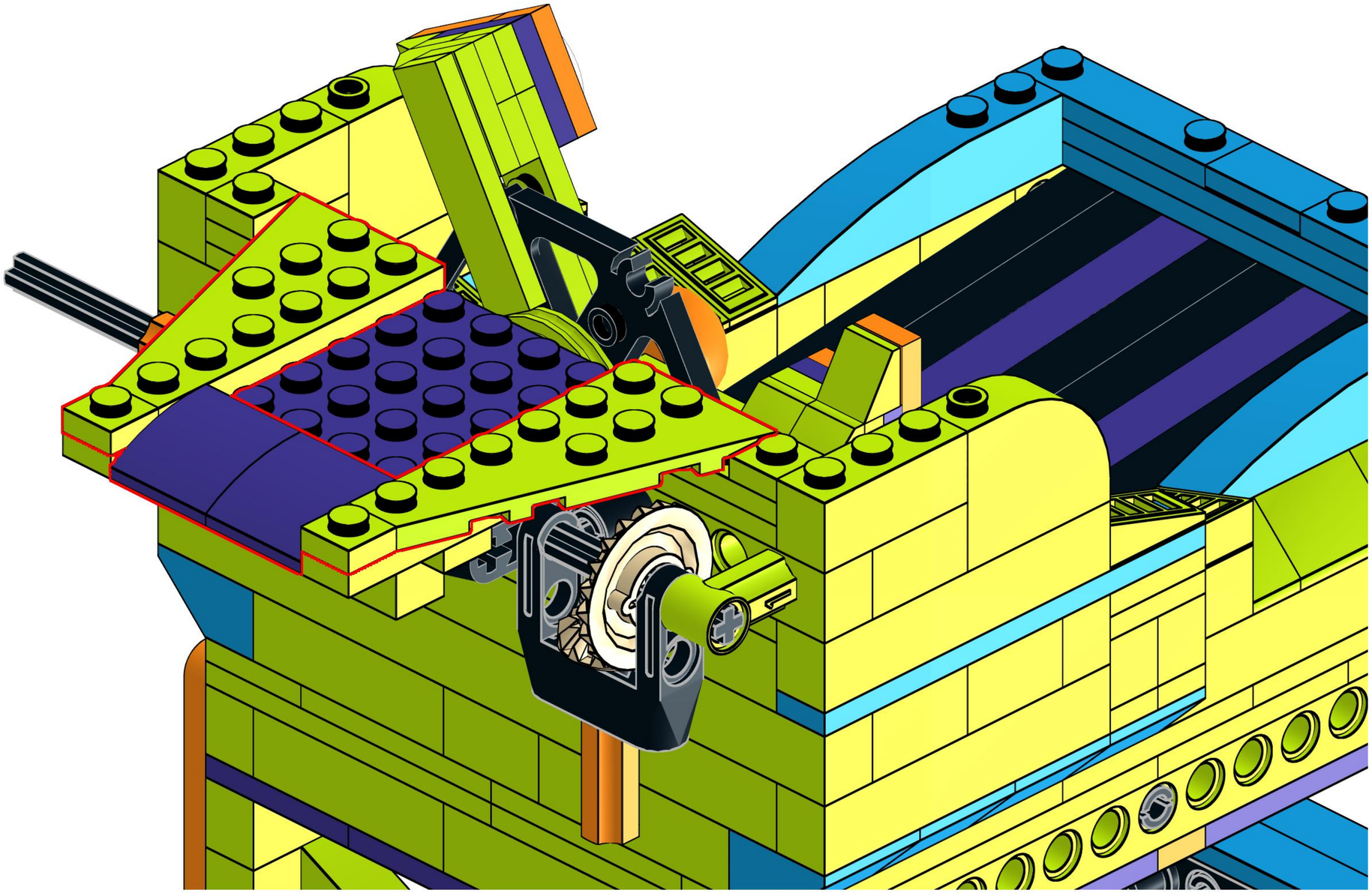

112

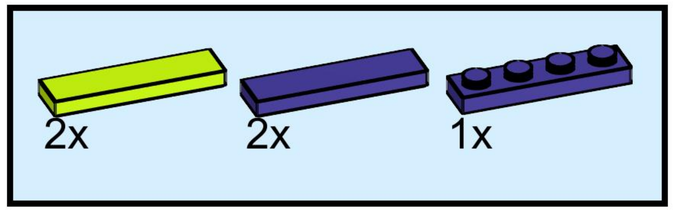

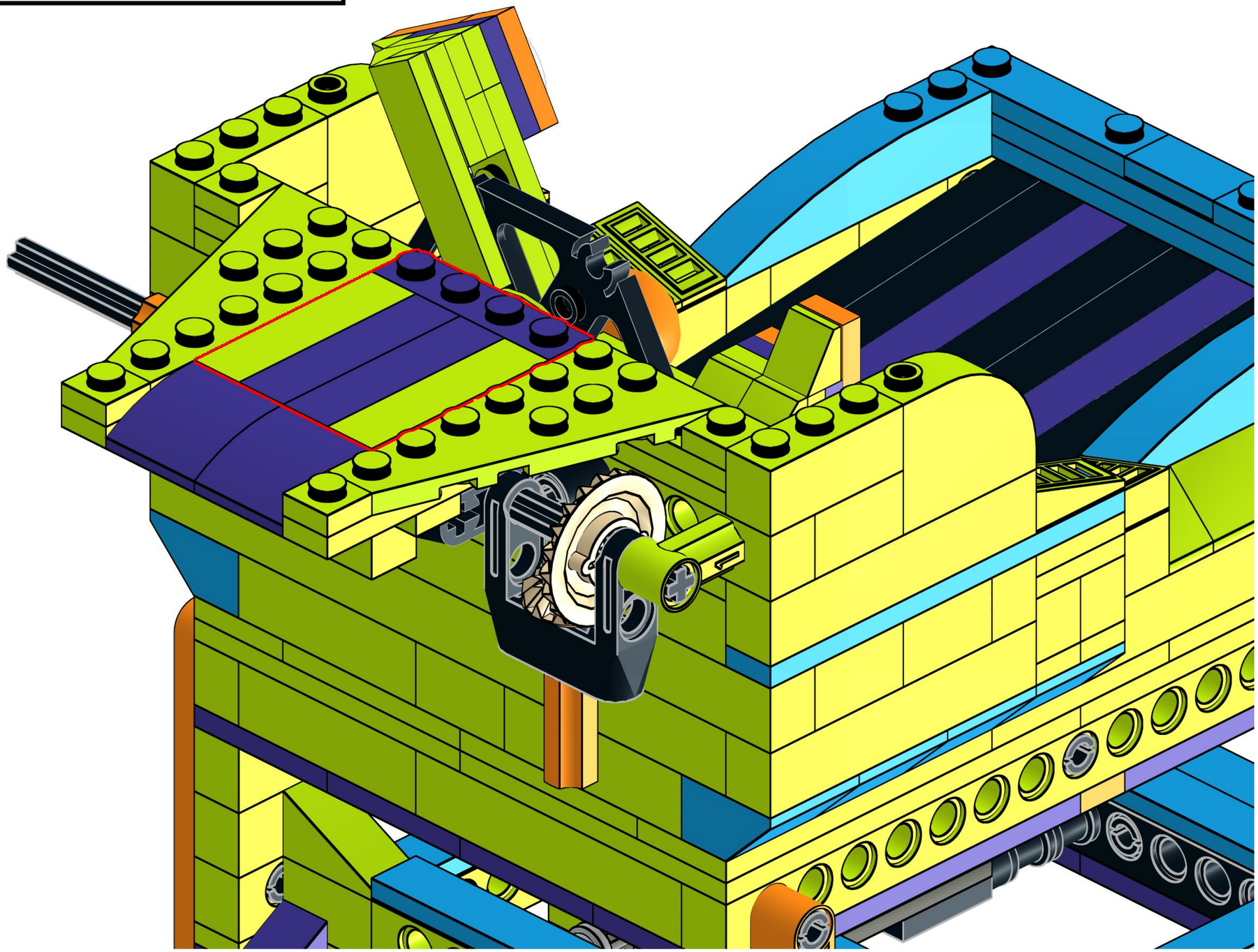

113

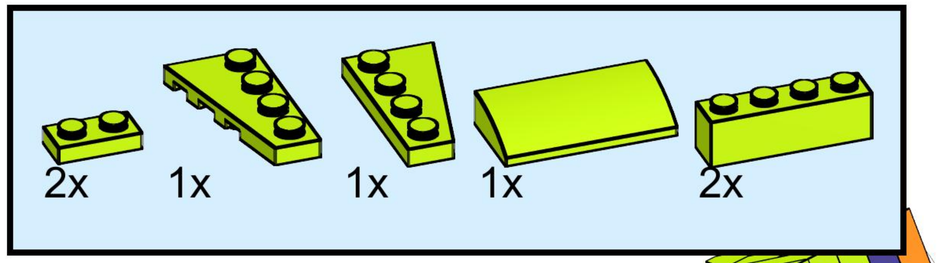

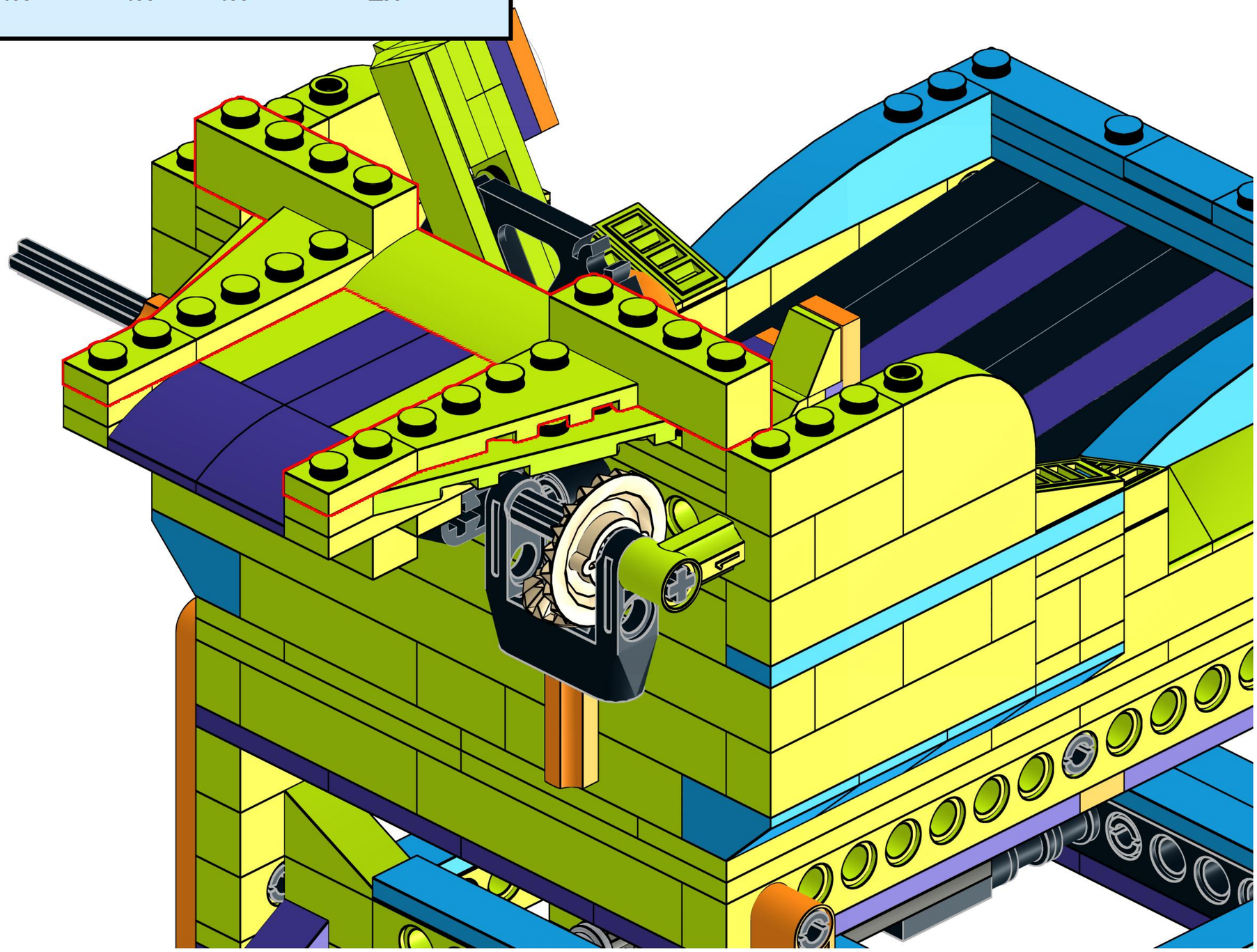

114

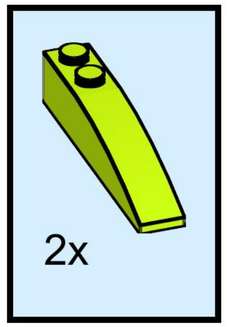

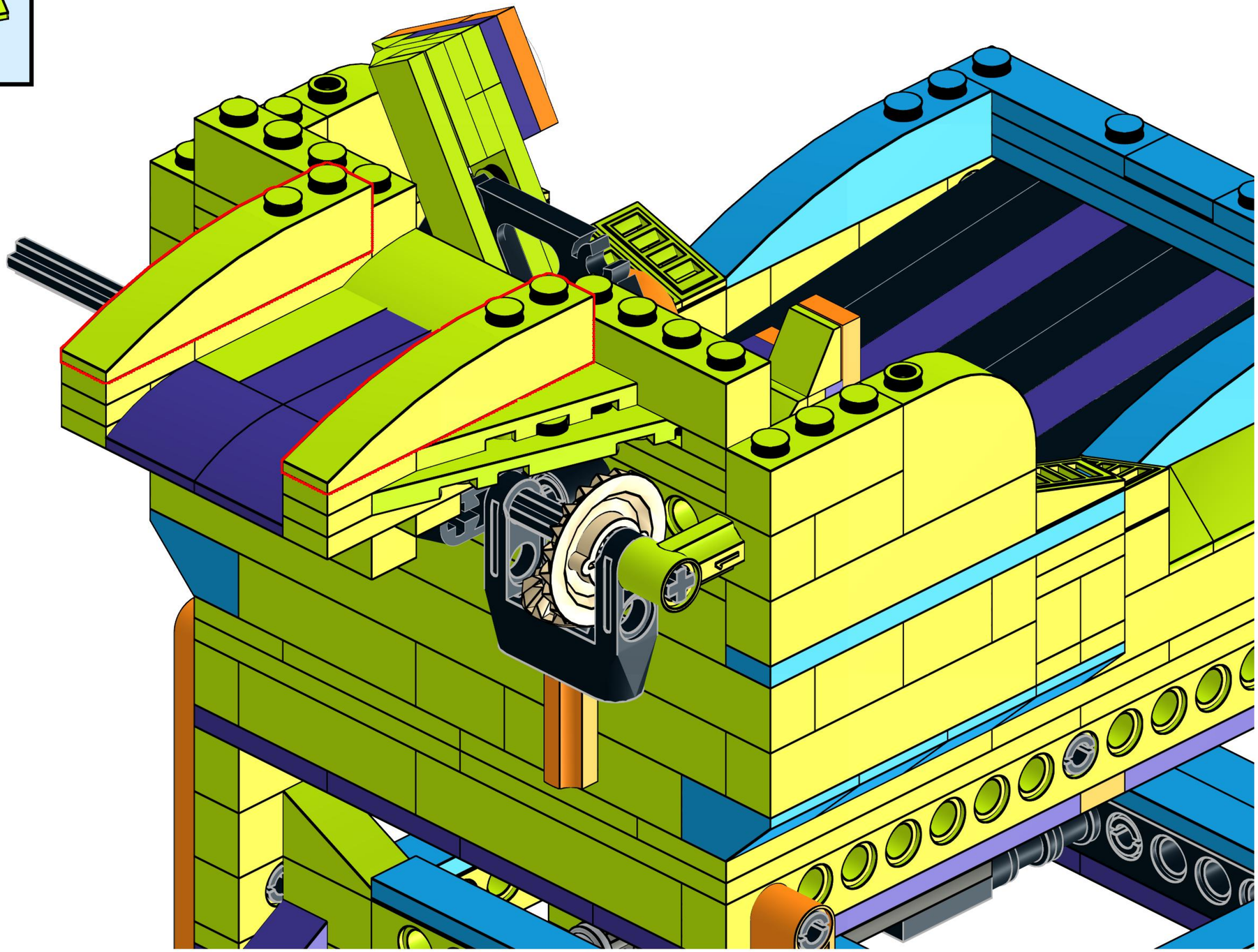

115

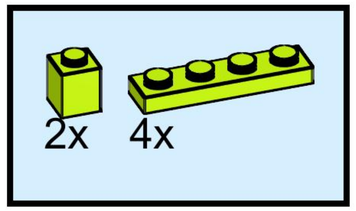

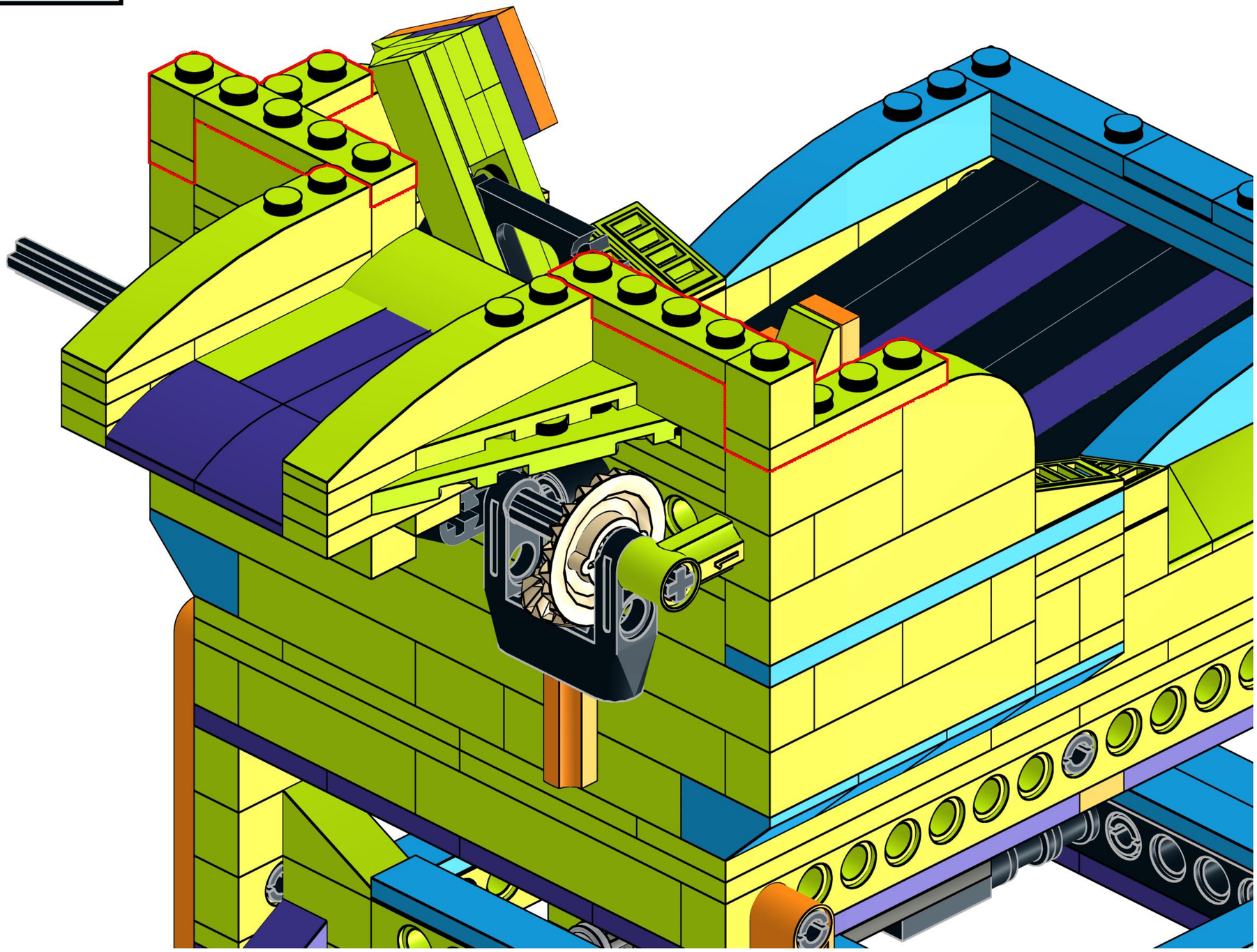

116

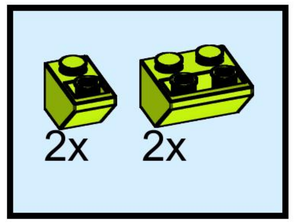

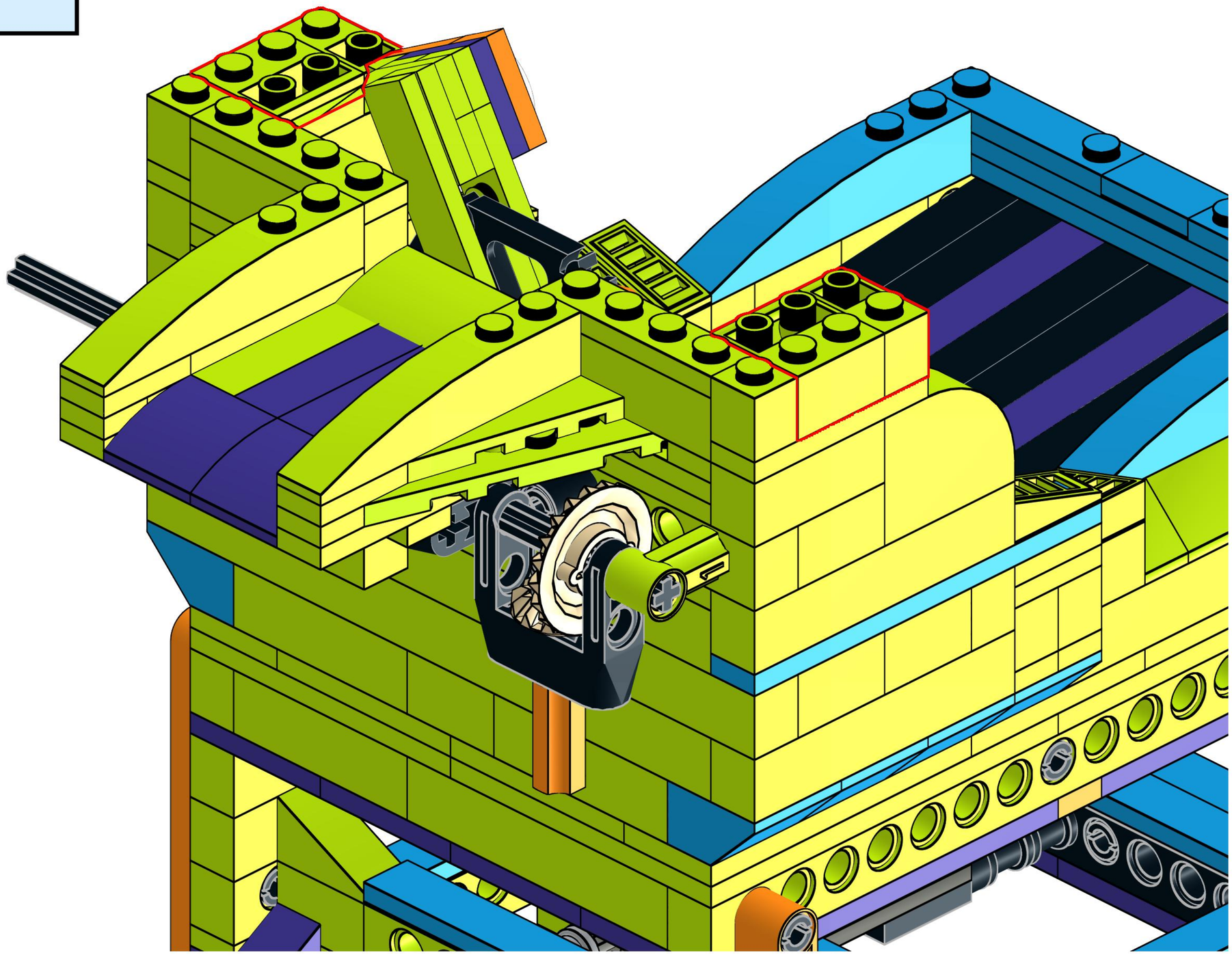

117

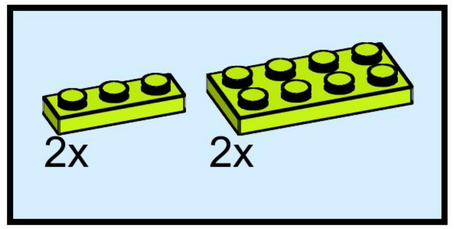

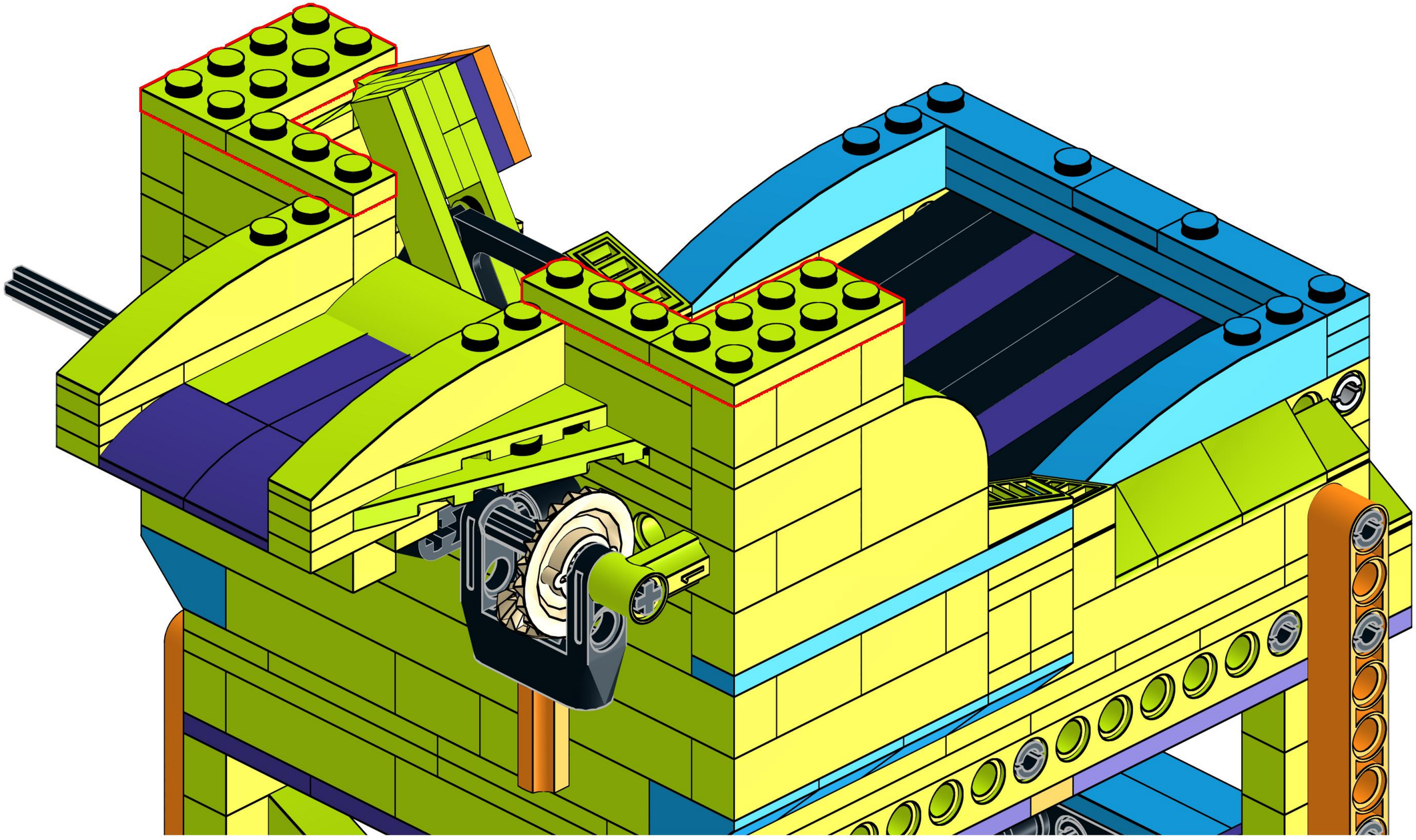

118

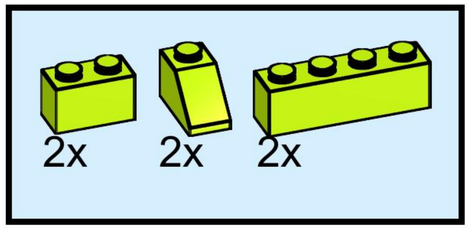

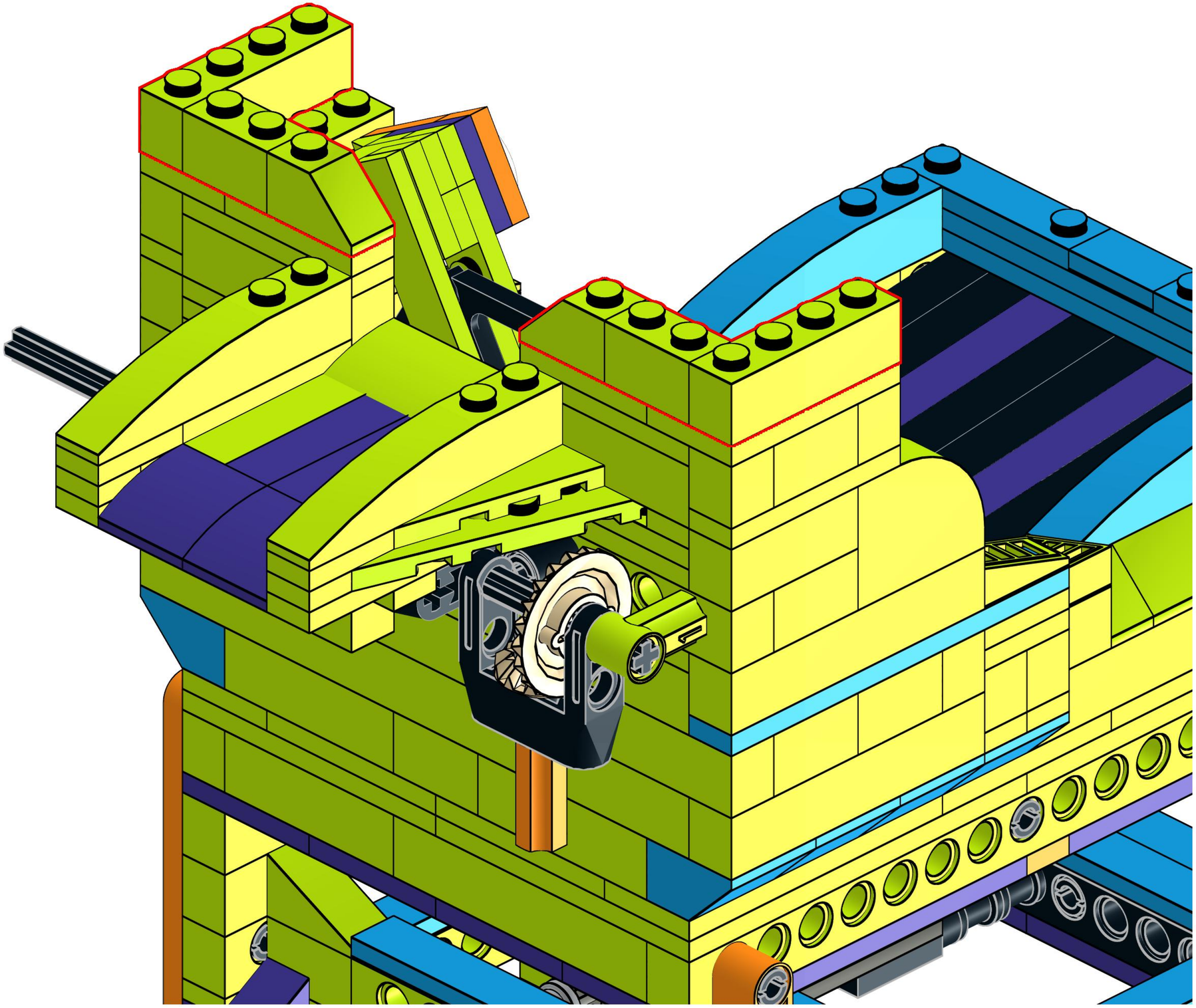

119

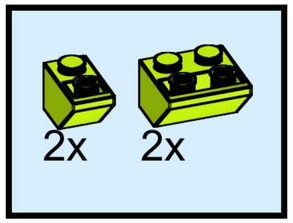

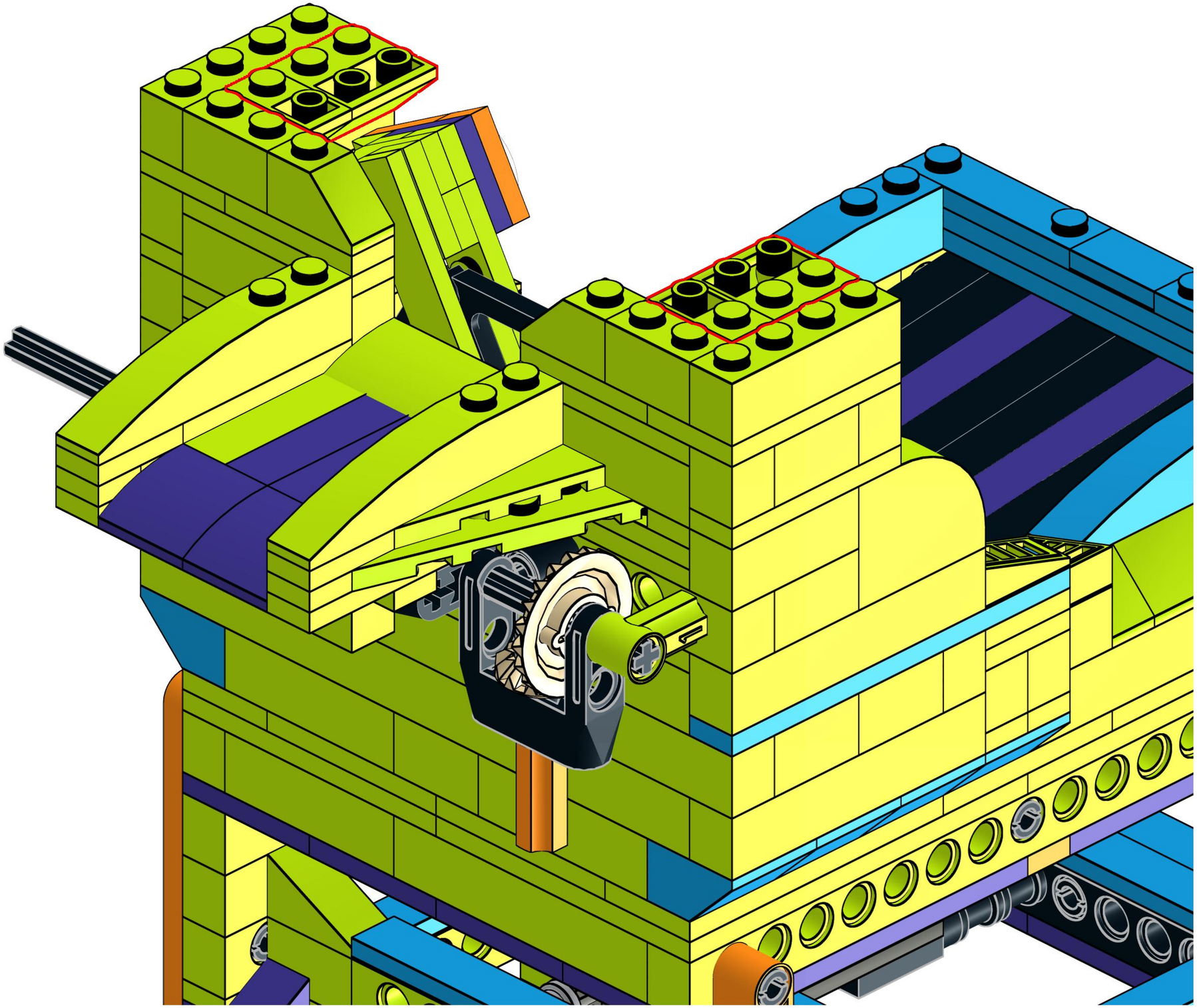

120

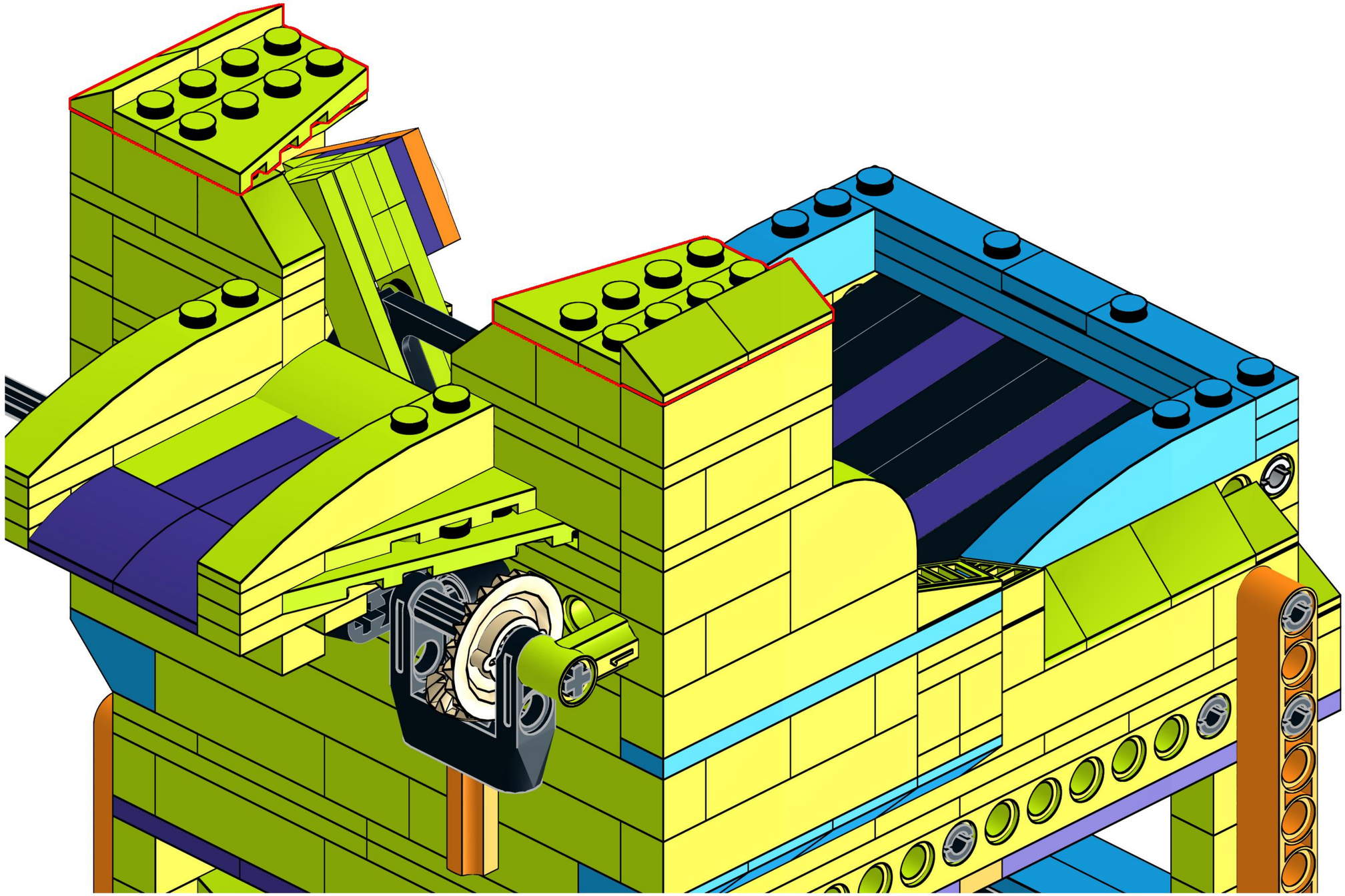

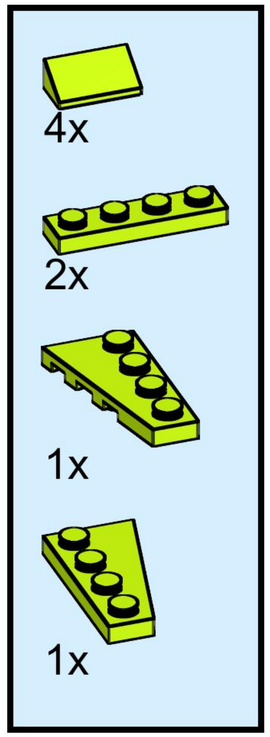

121

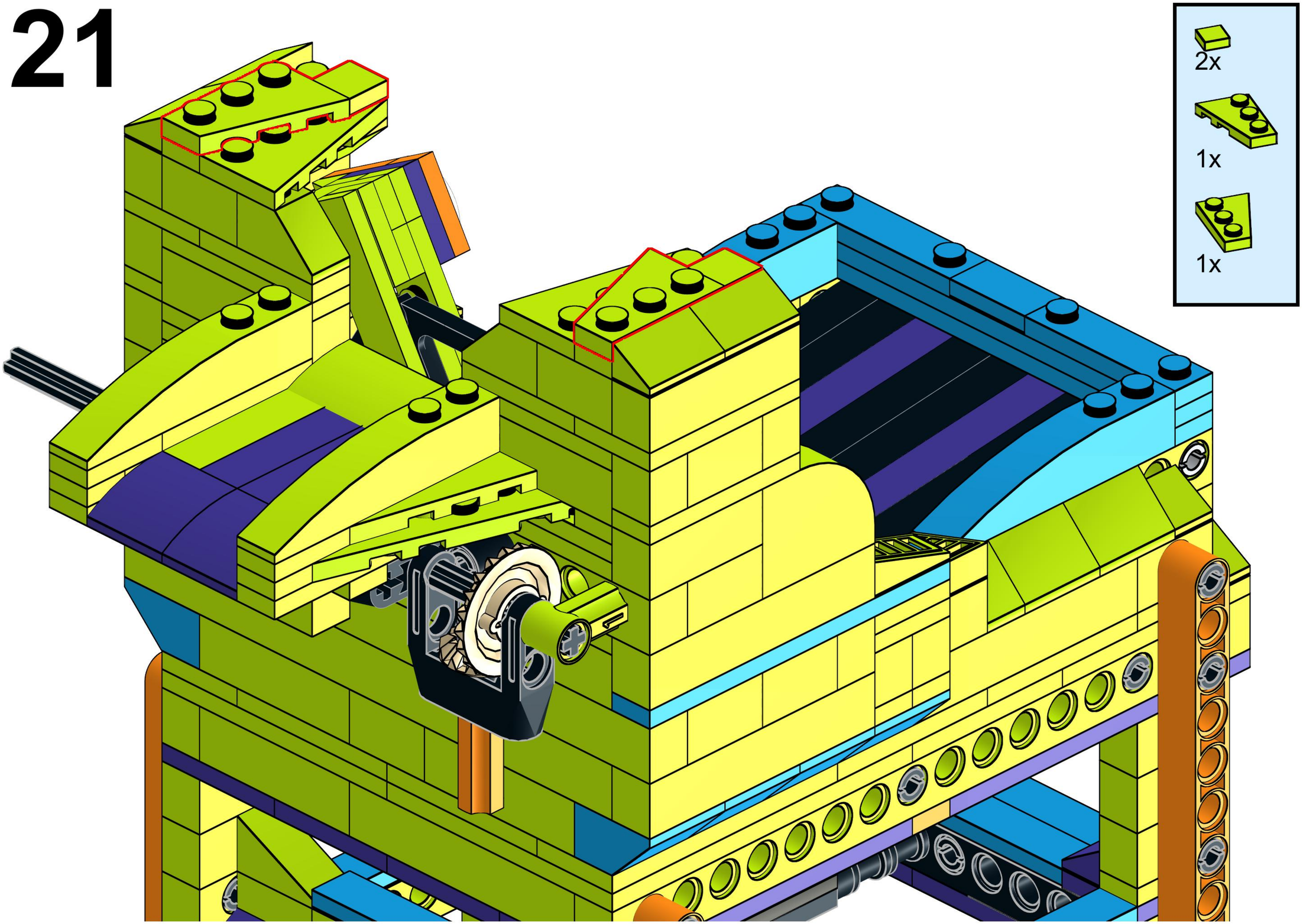

122

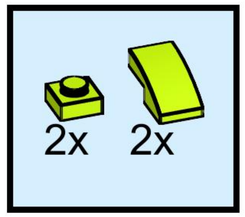

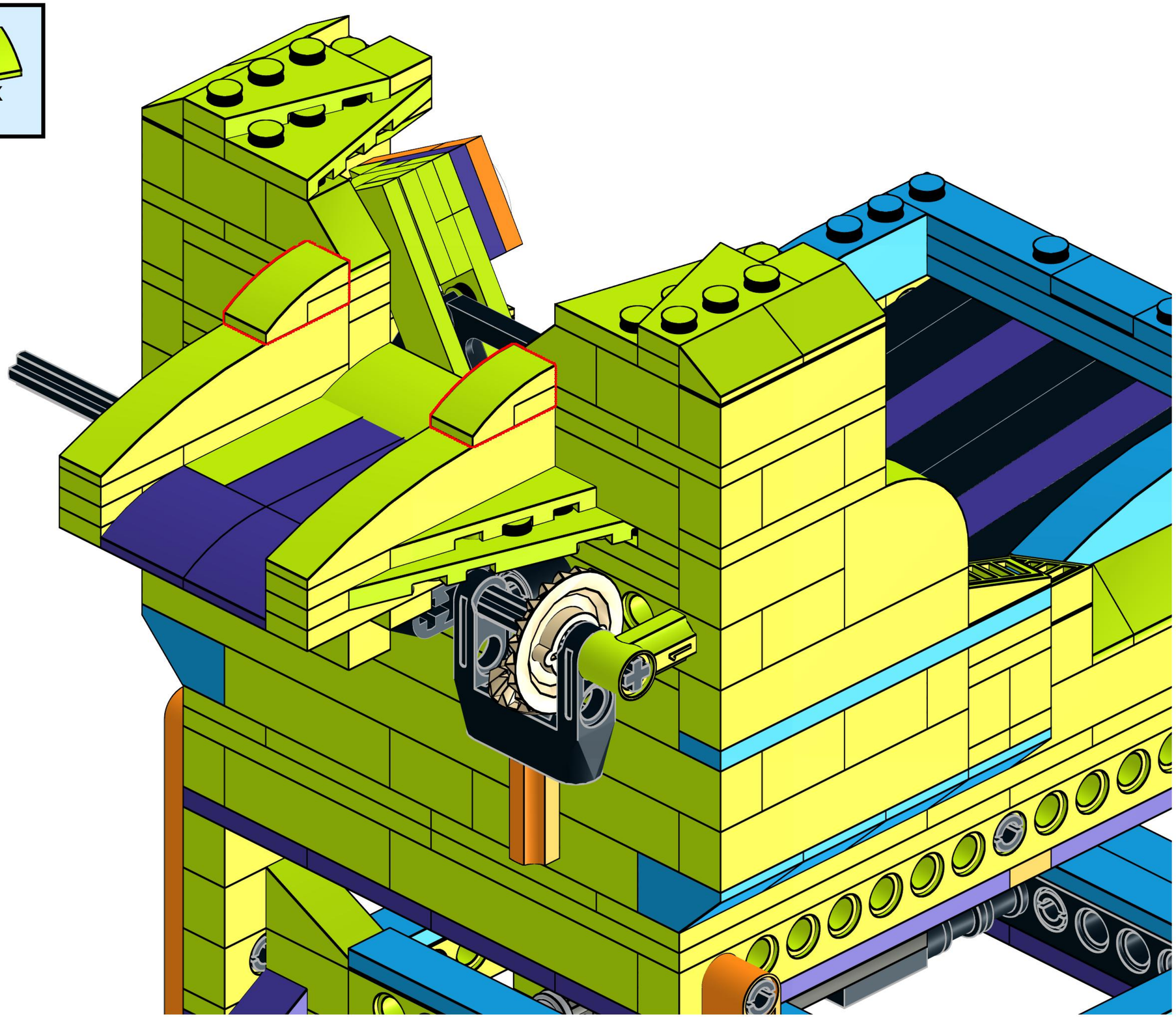

123

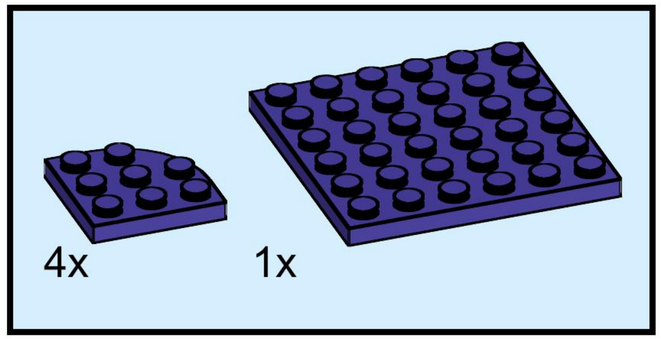

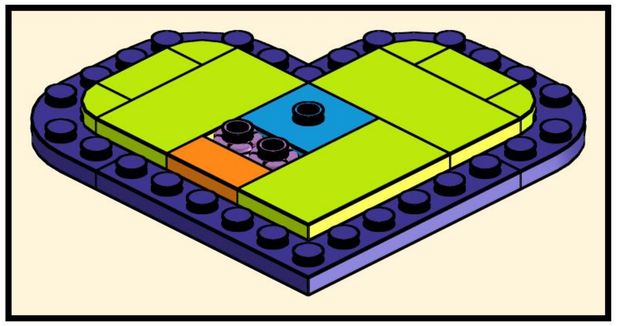

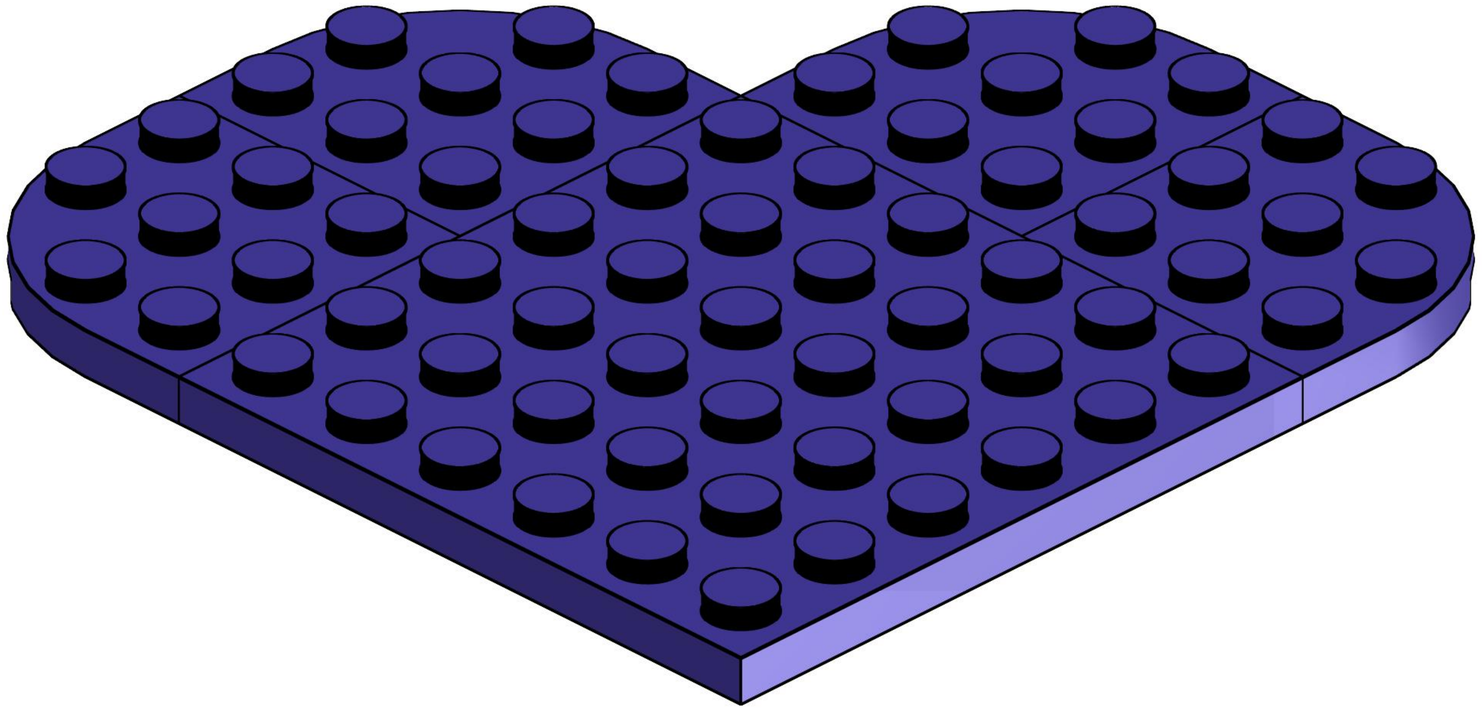

124

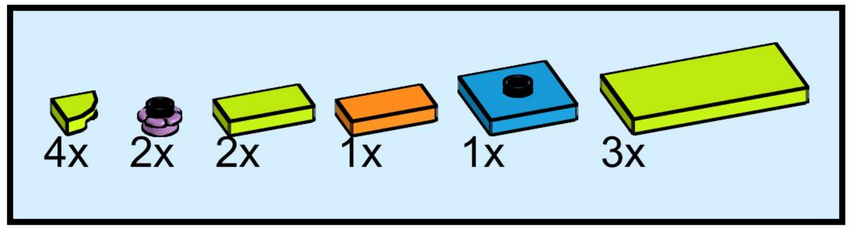

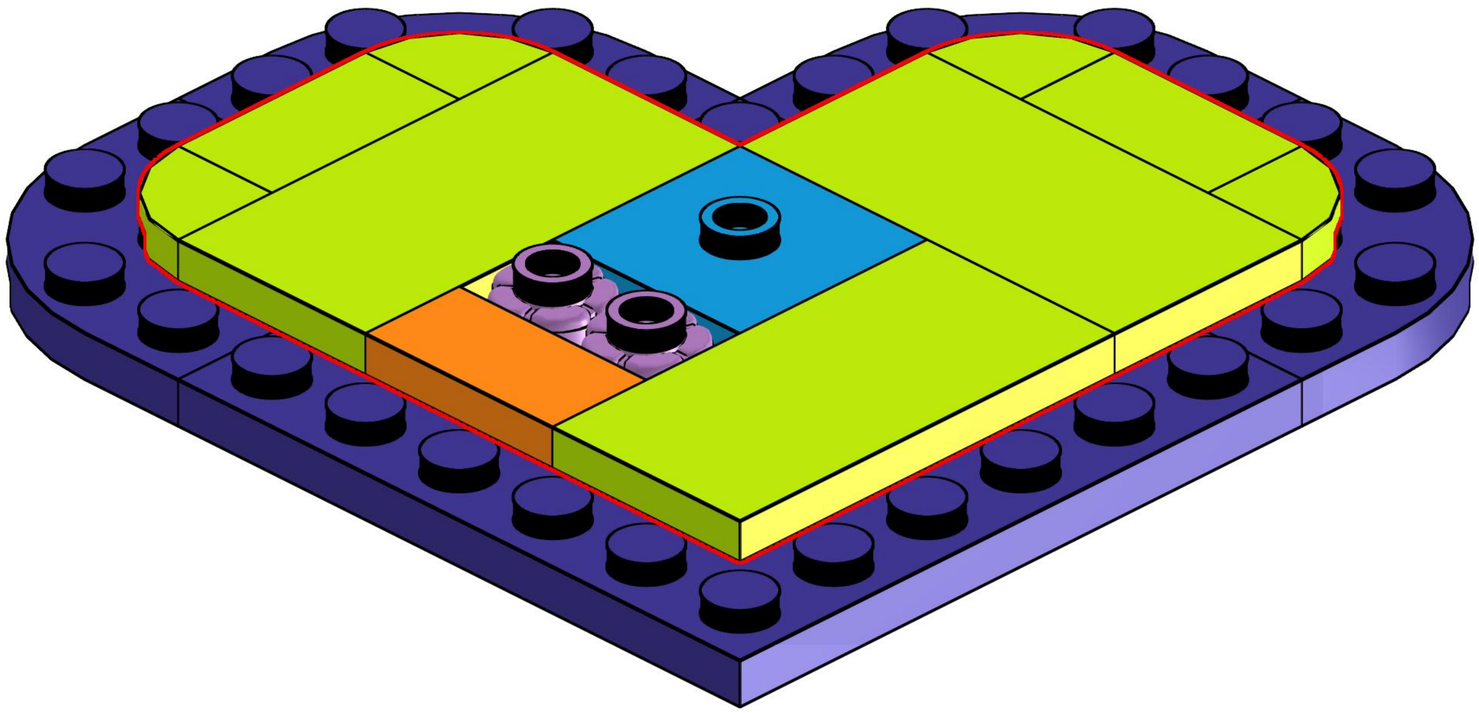

125

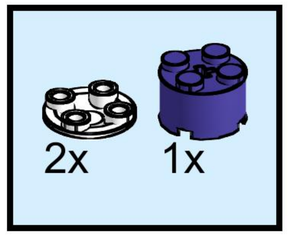

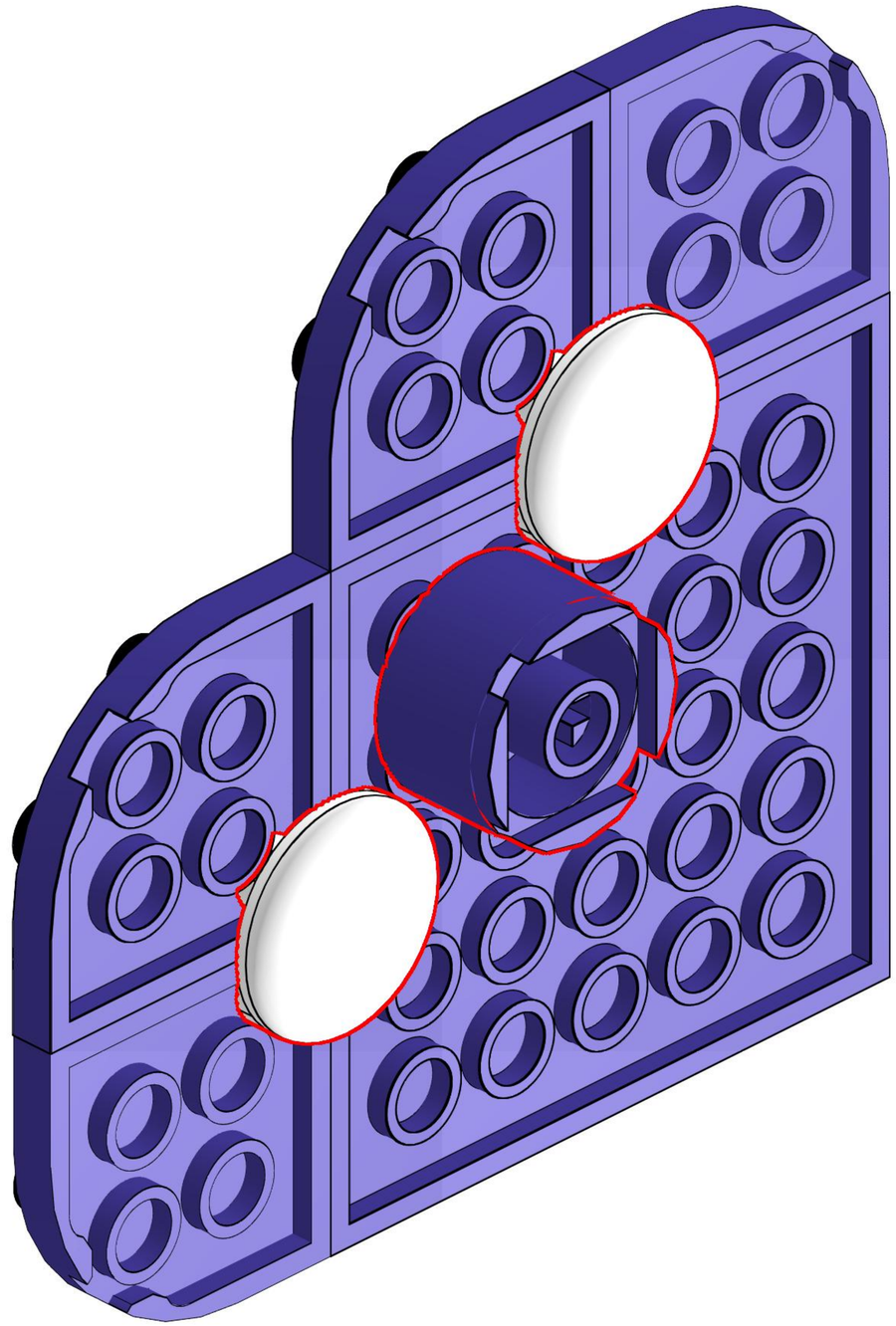

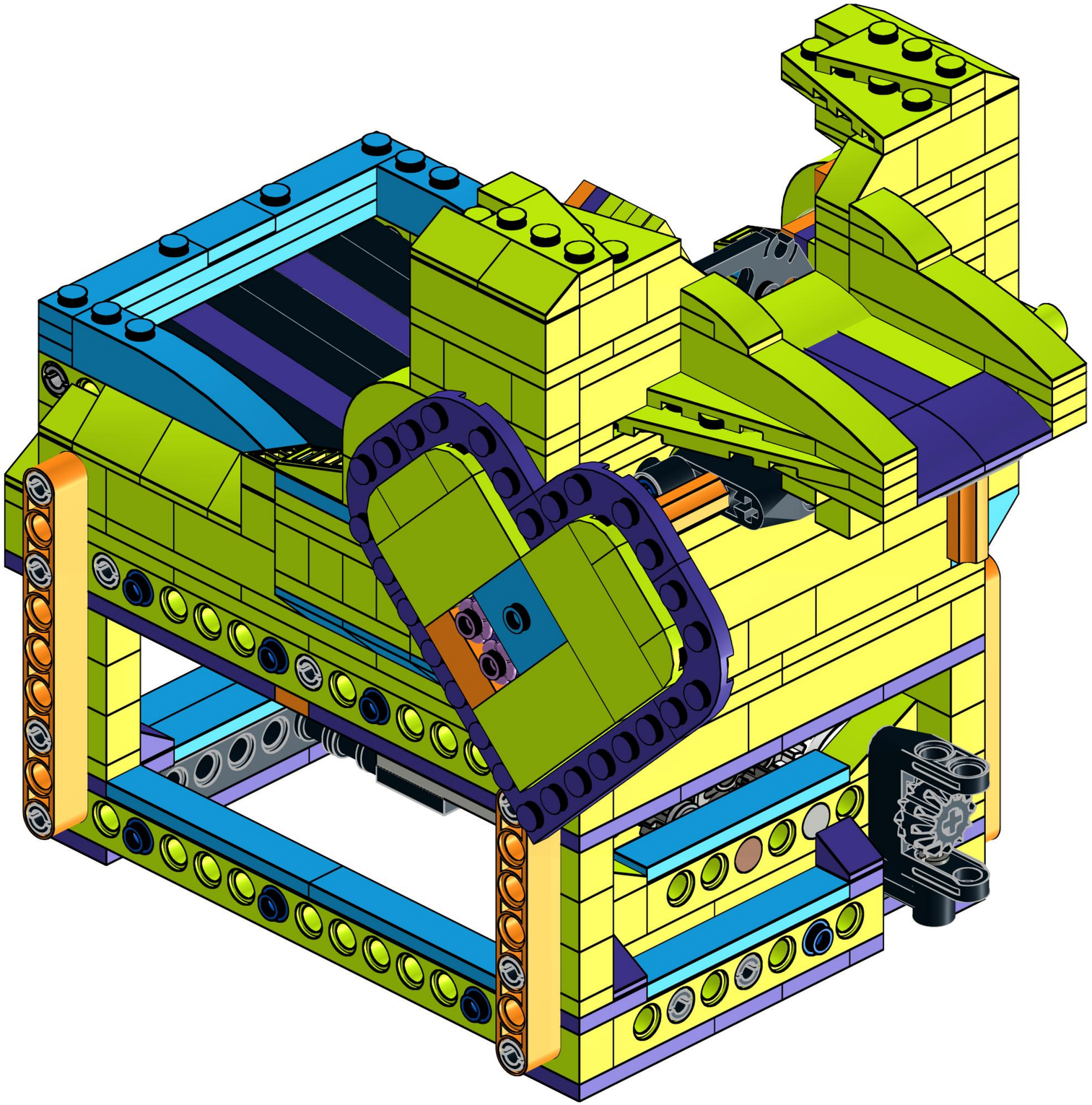

127

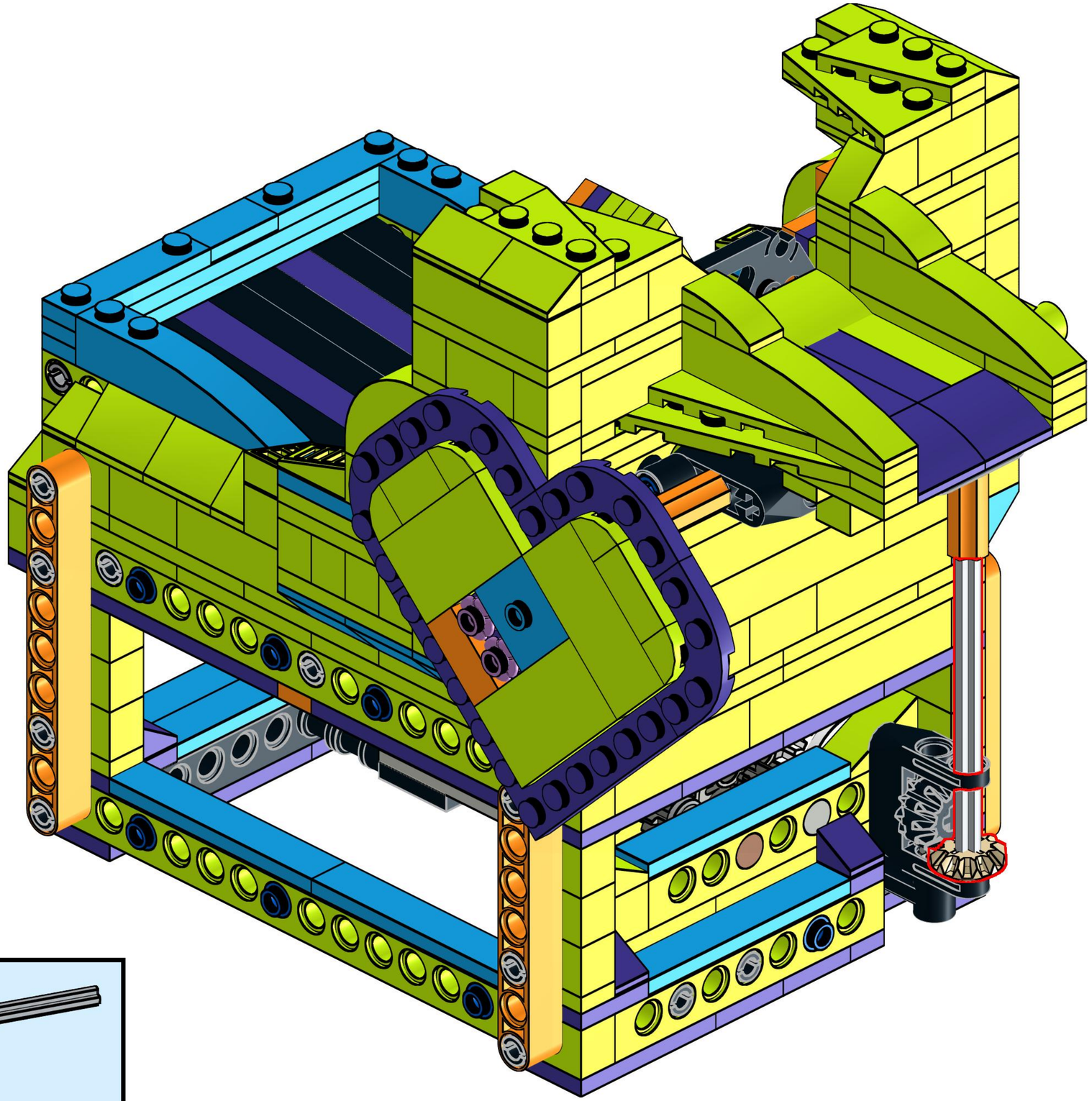

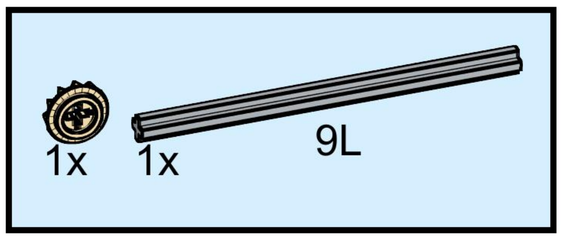

Never reveal your magic tricks! - Mia

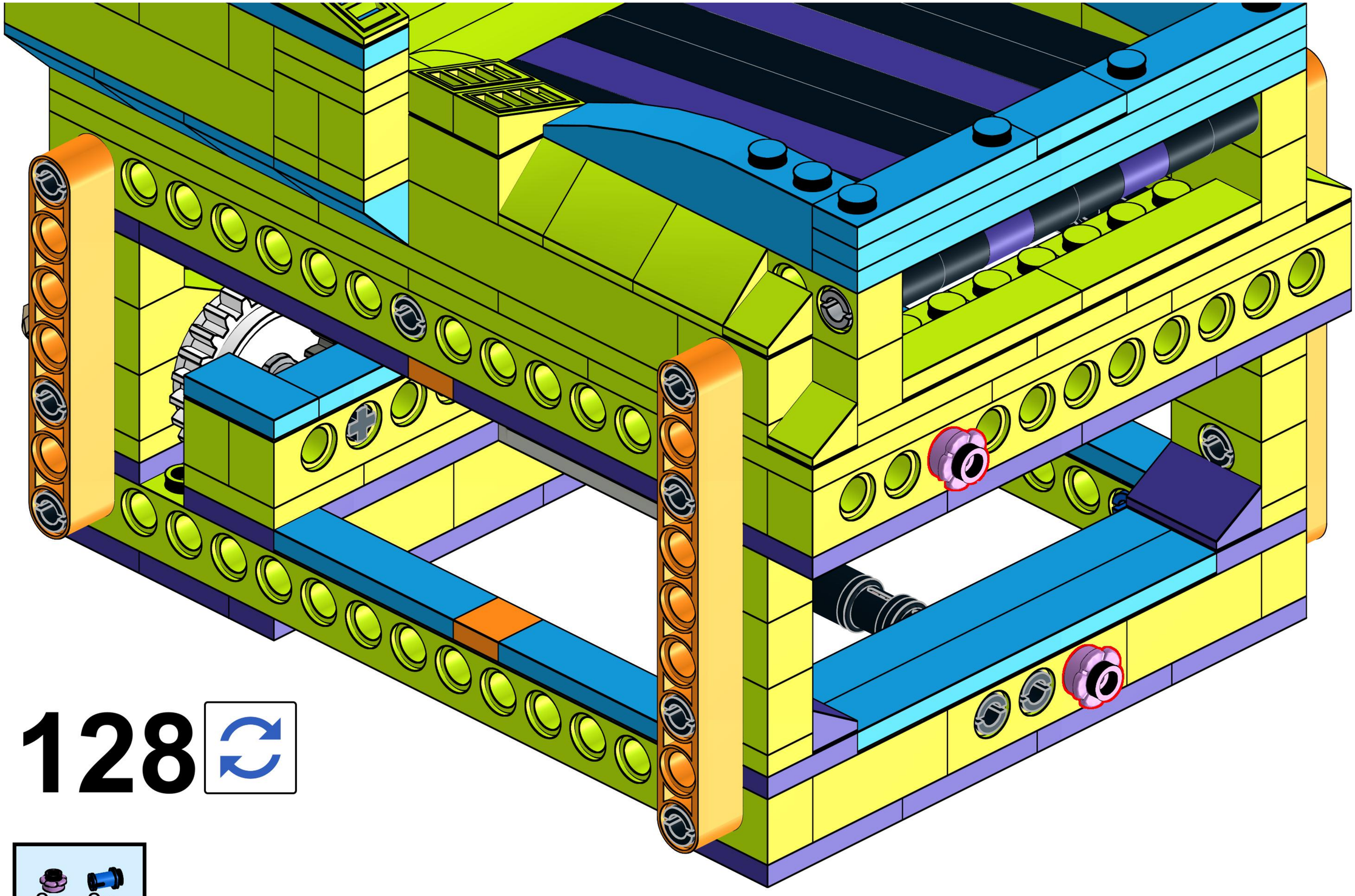

128

2x 2x

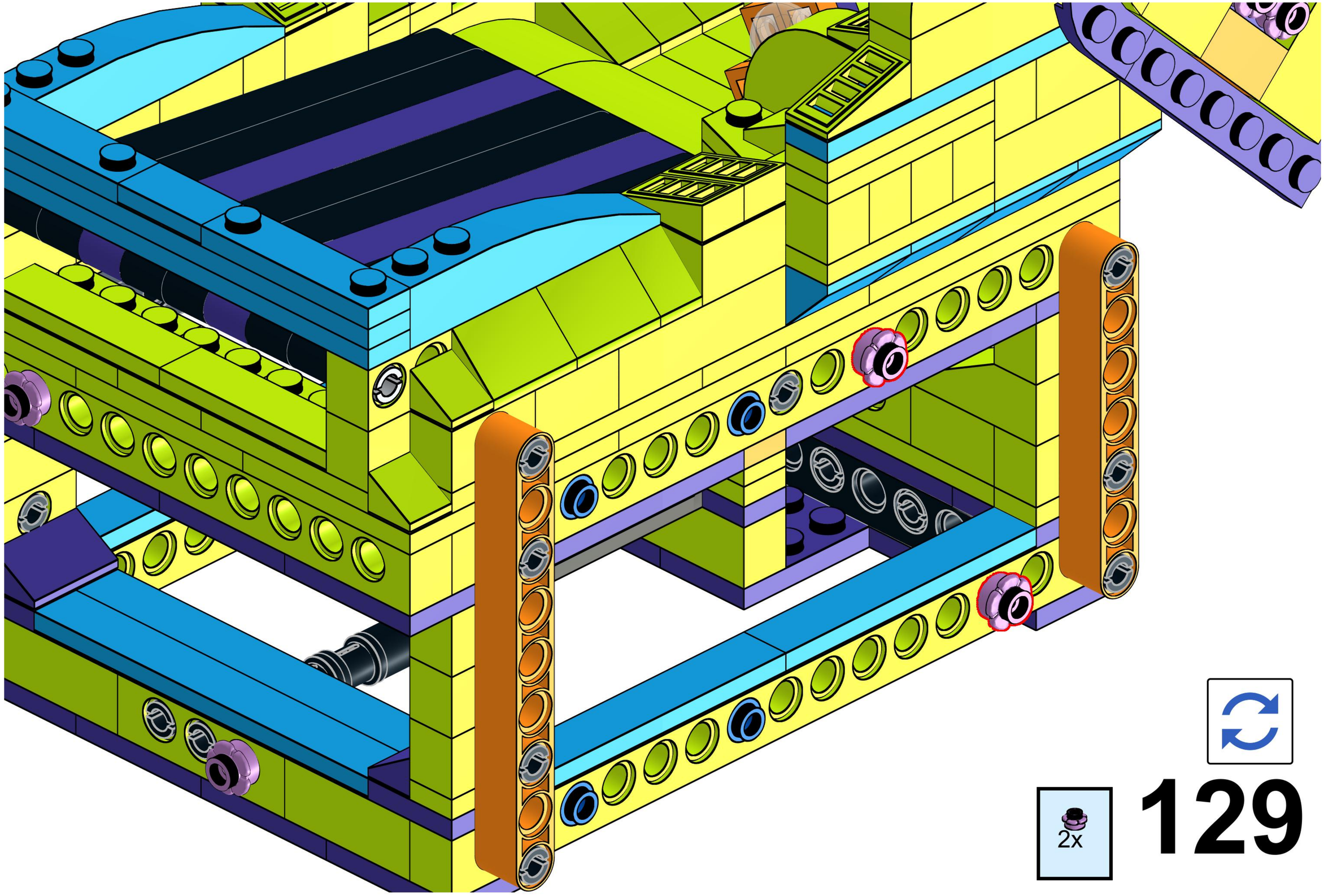

2x

129

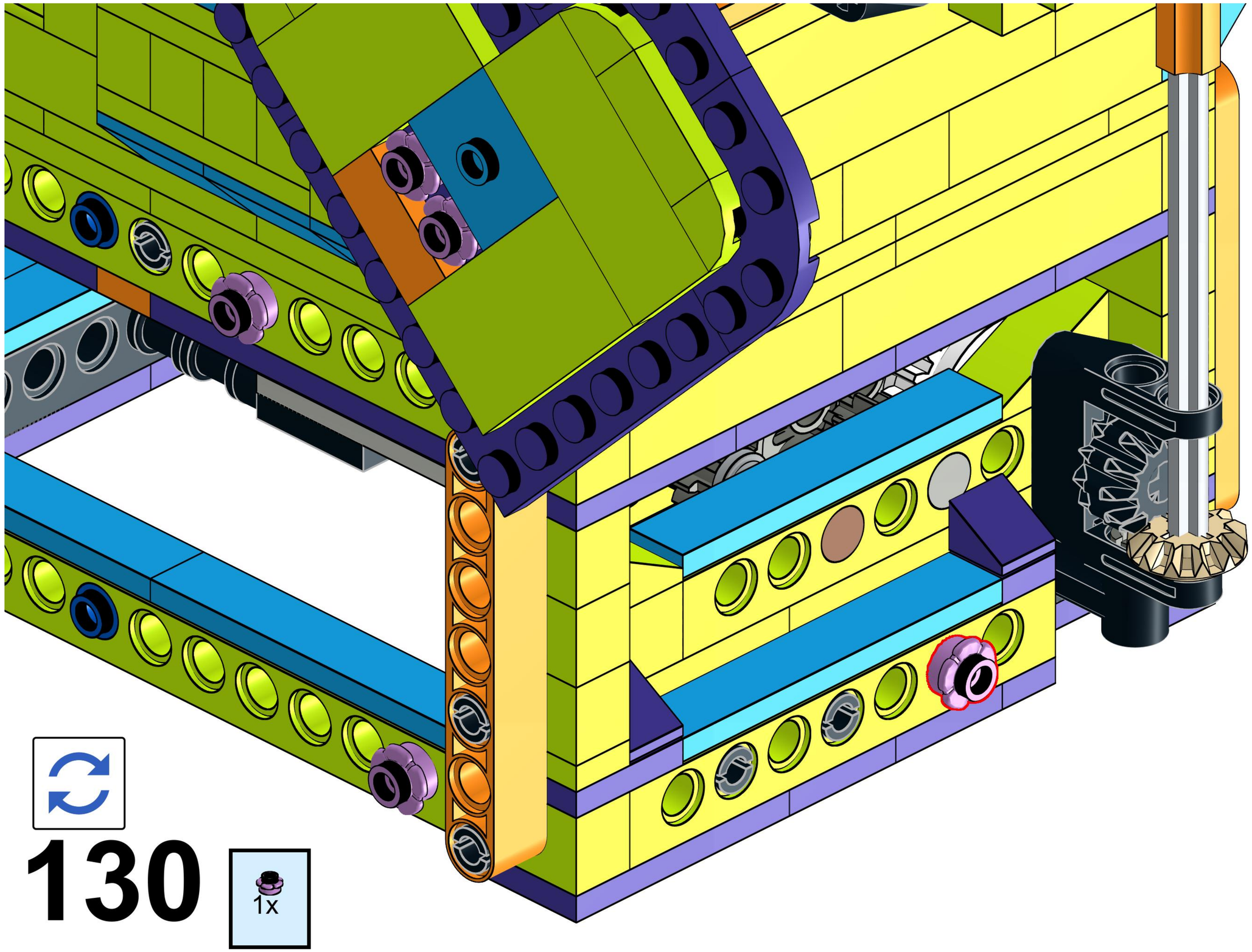
130
1x

131

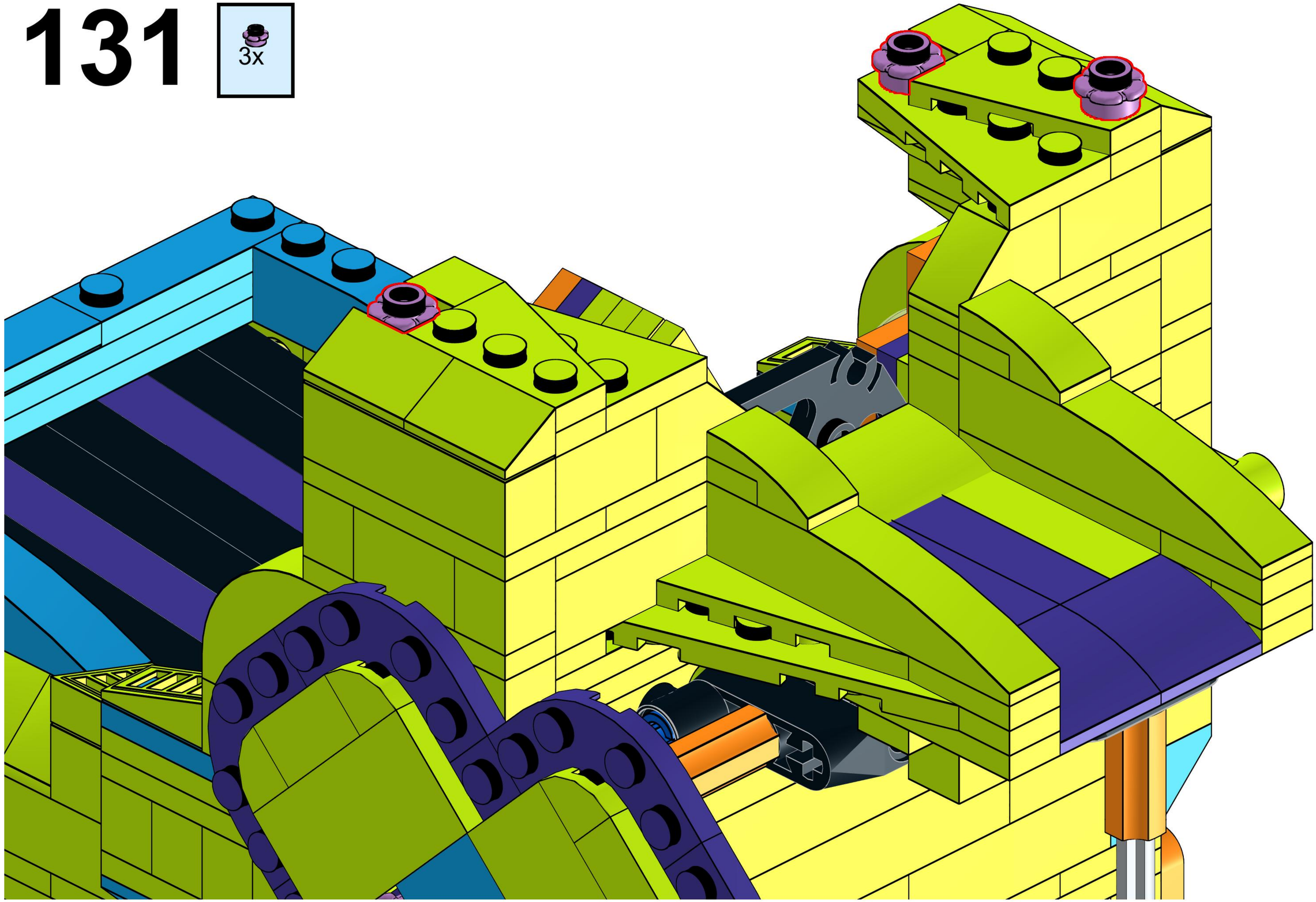

132

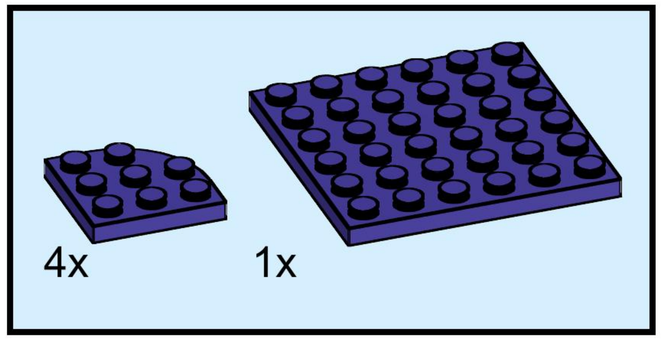

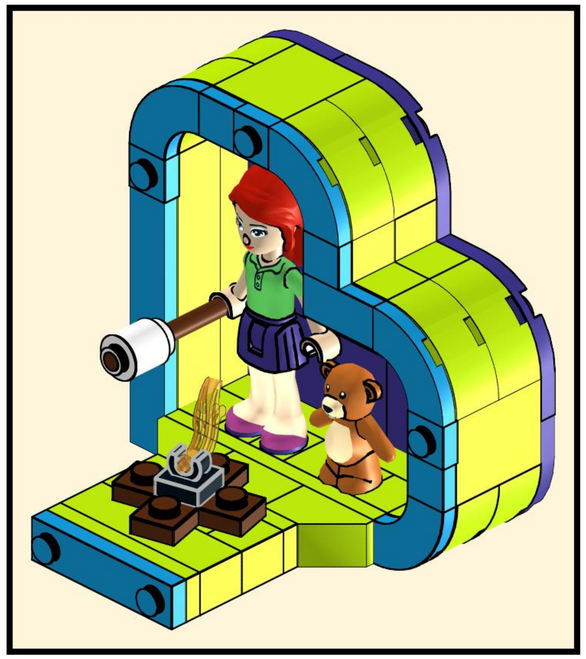

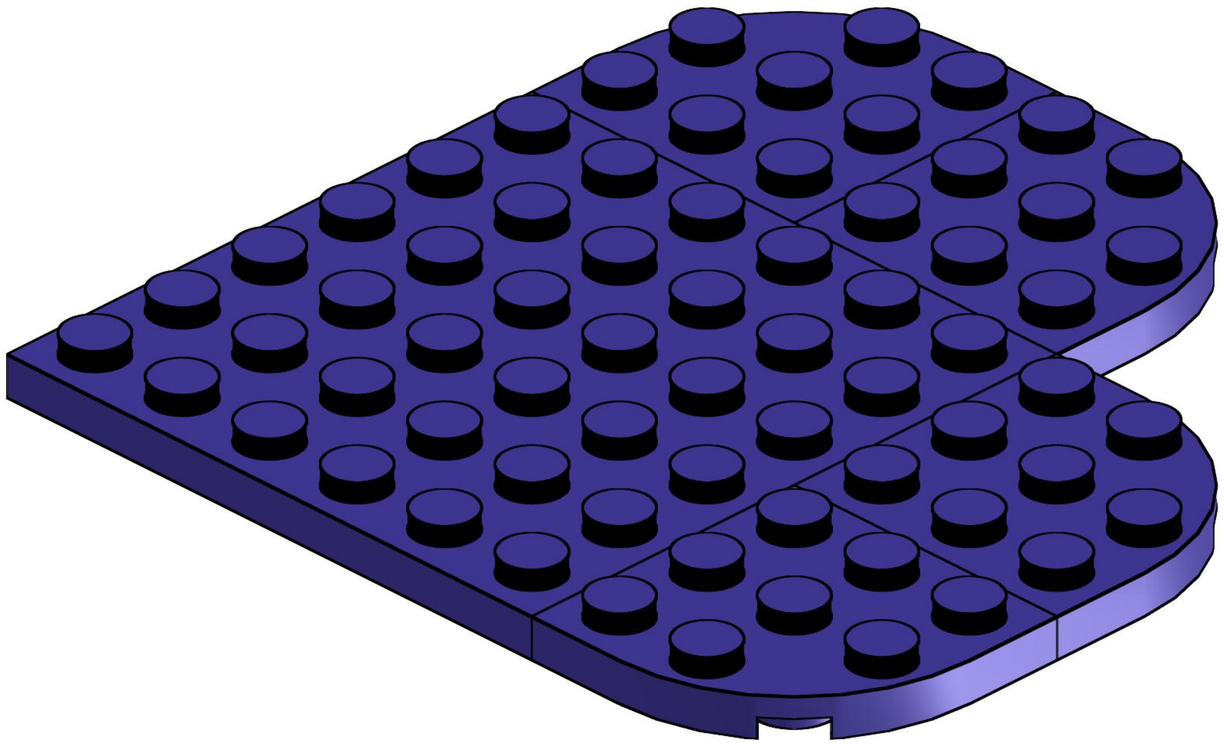

133

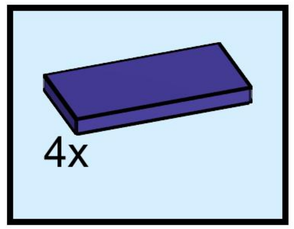

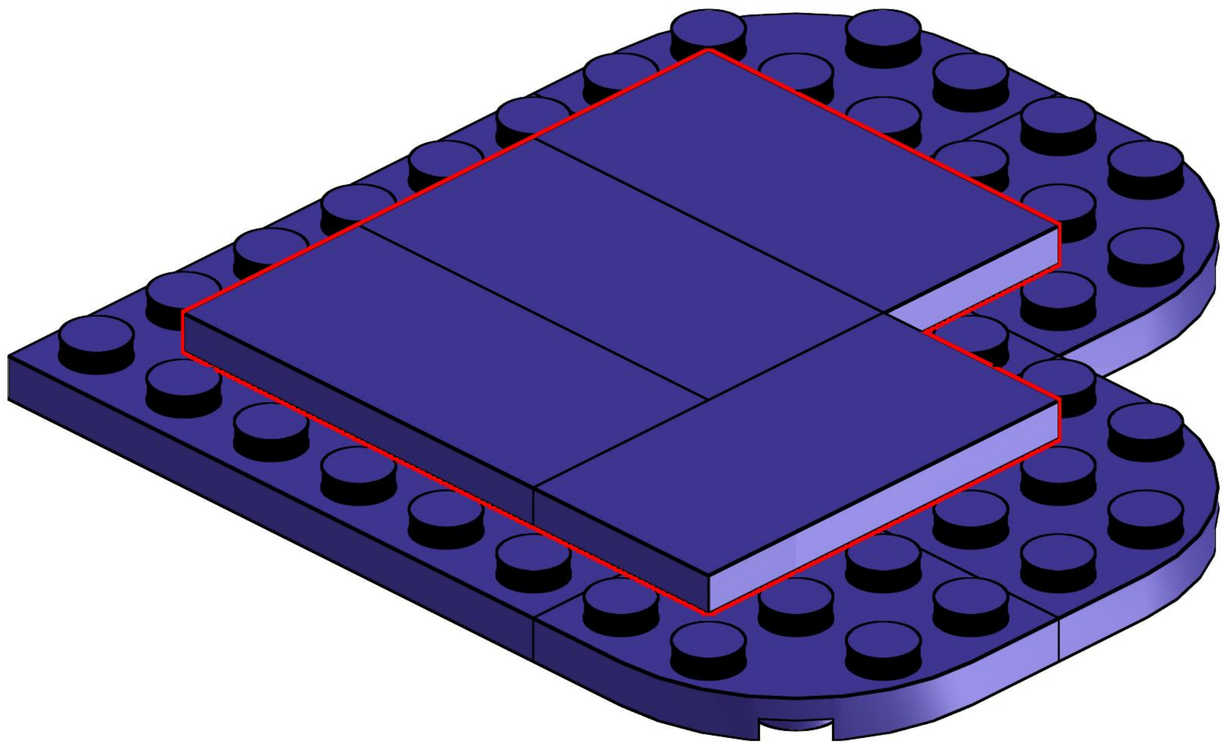

134

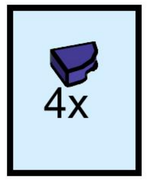

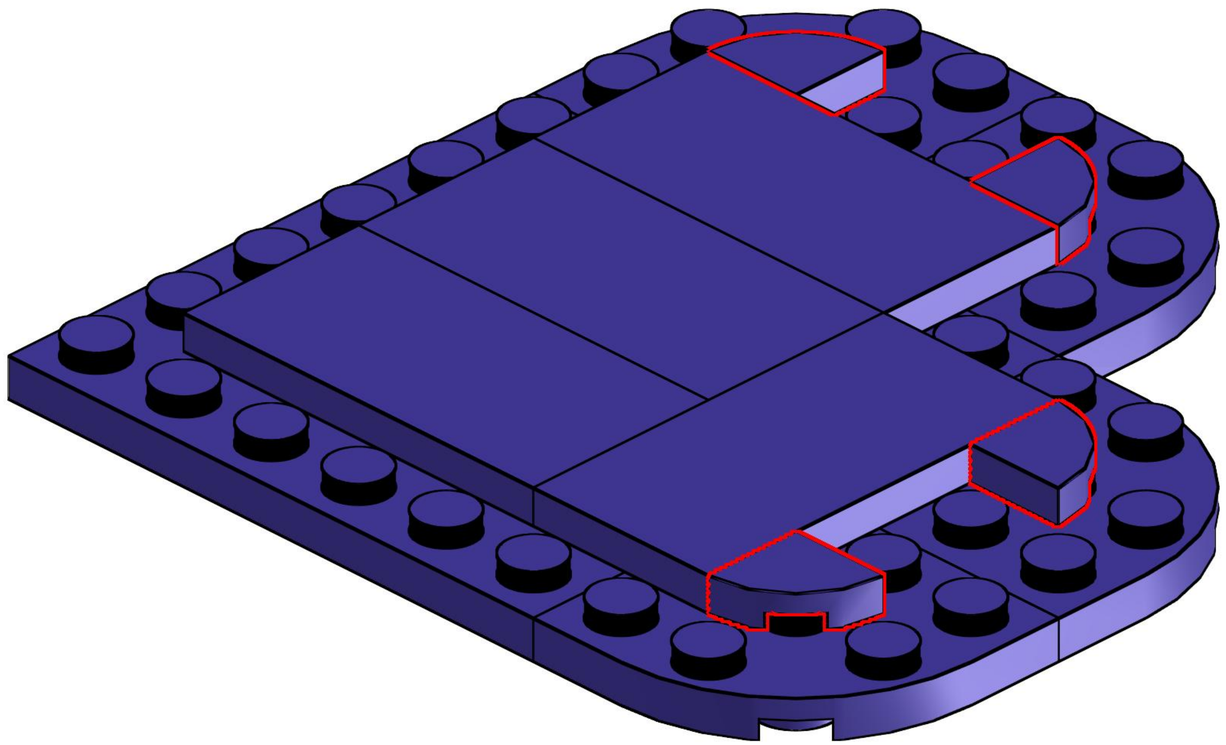

135

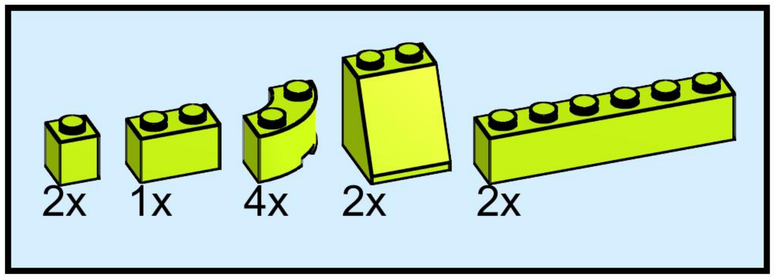

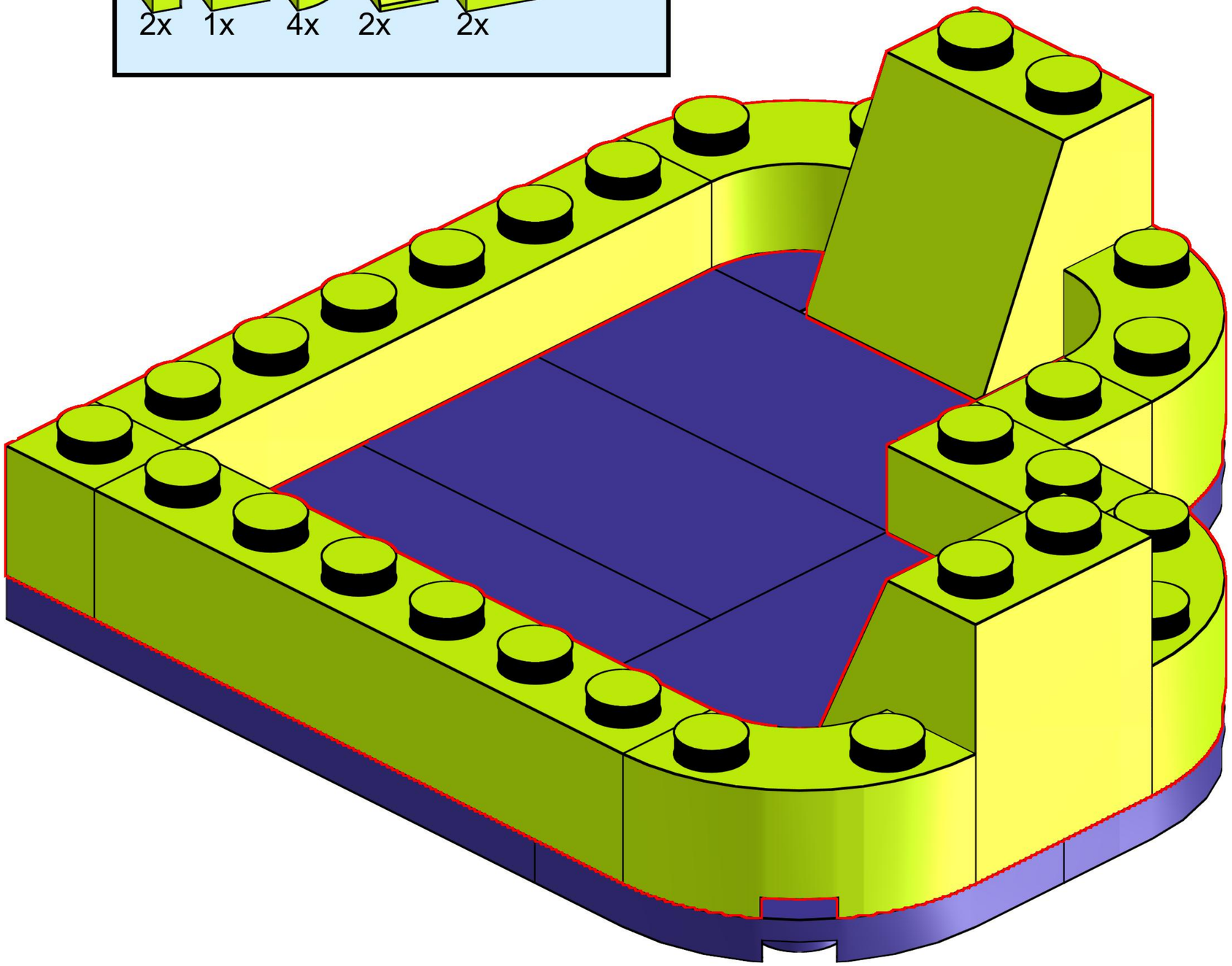

136

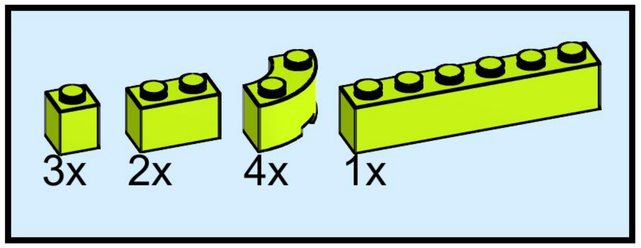

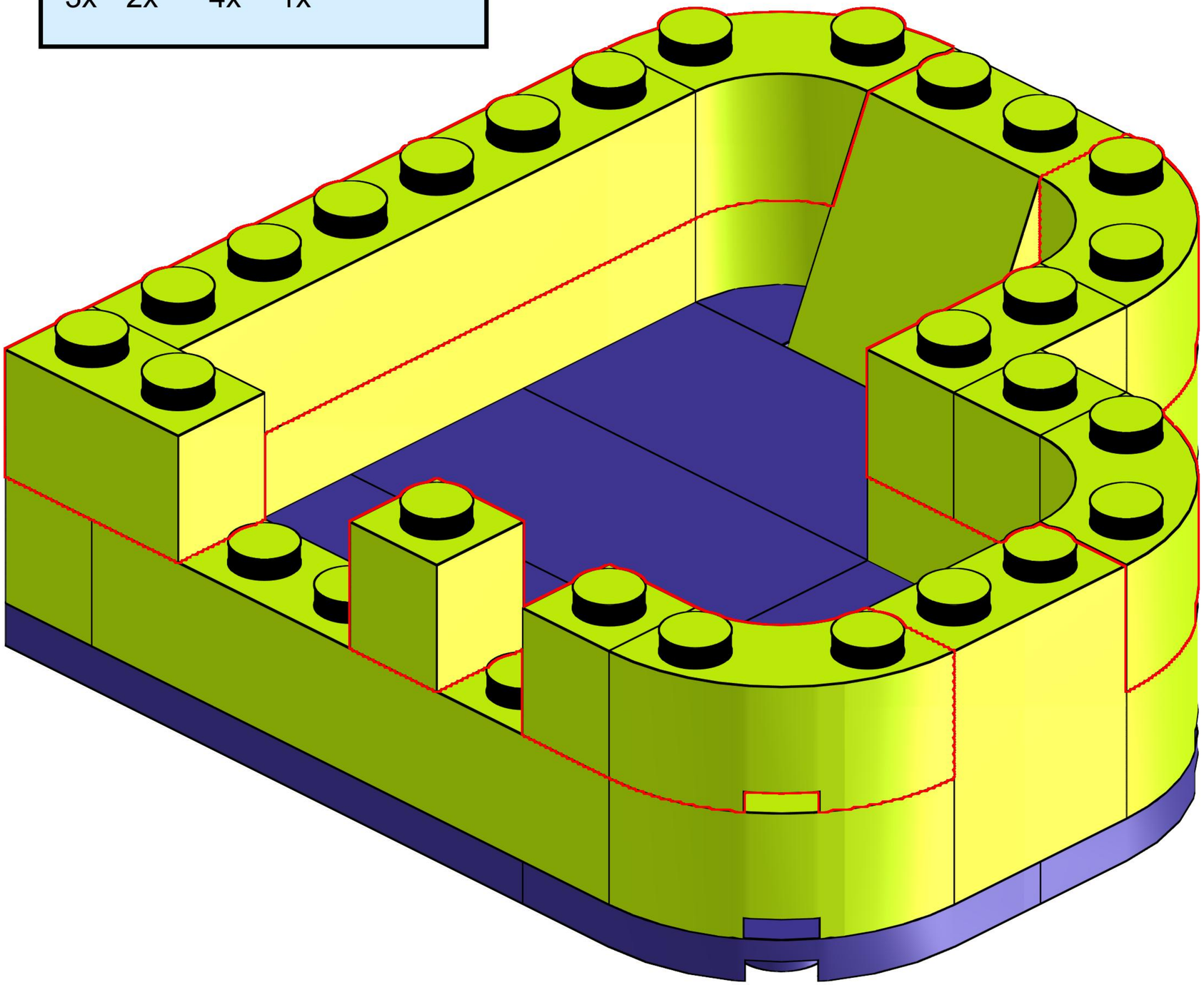

137

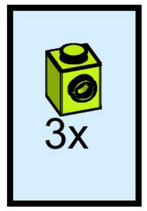

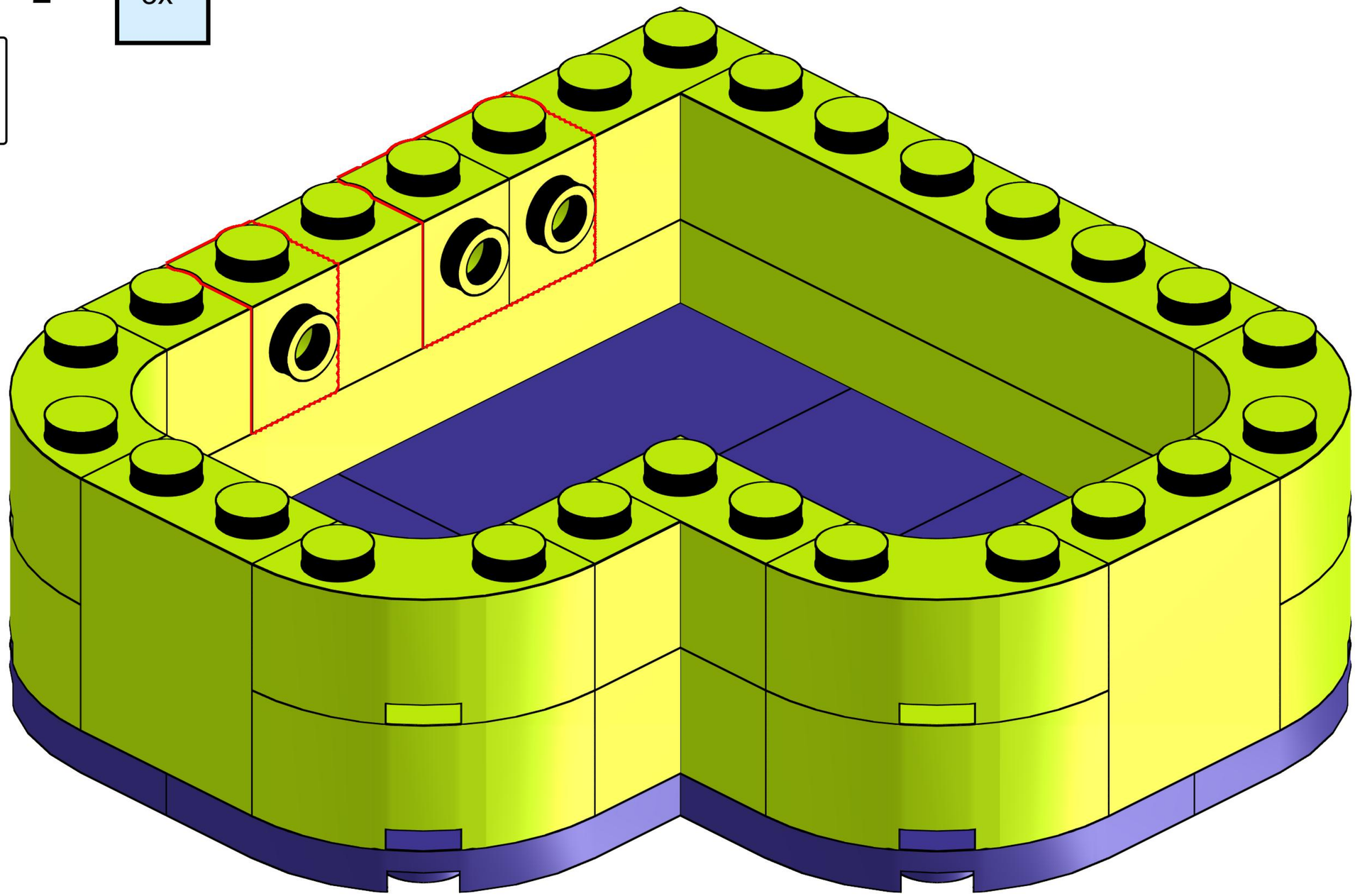

138

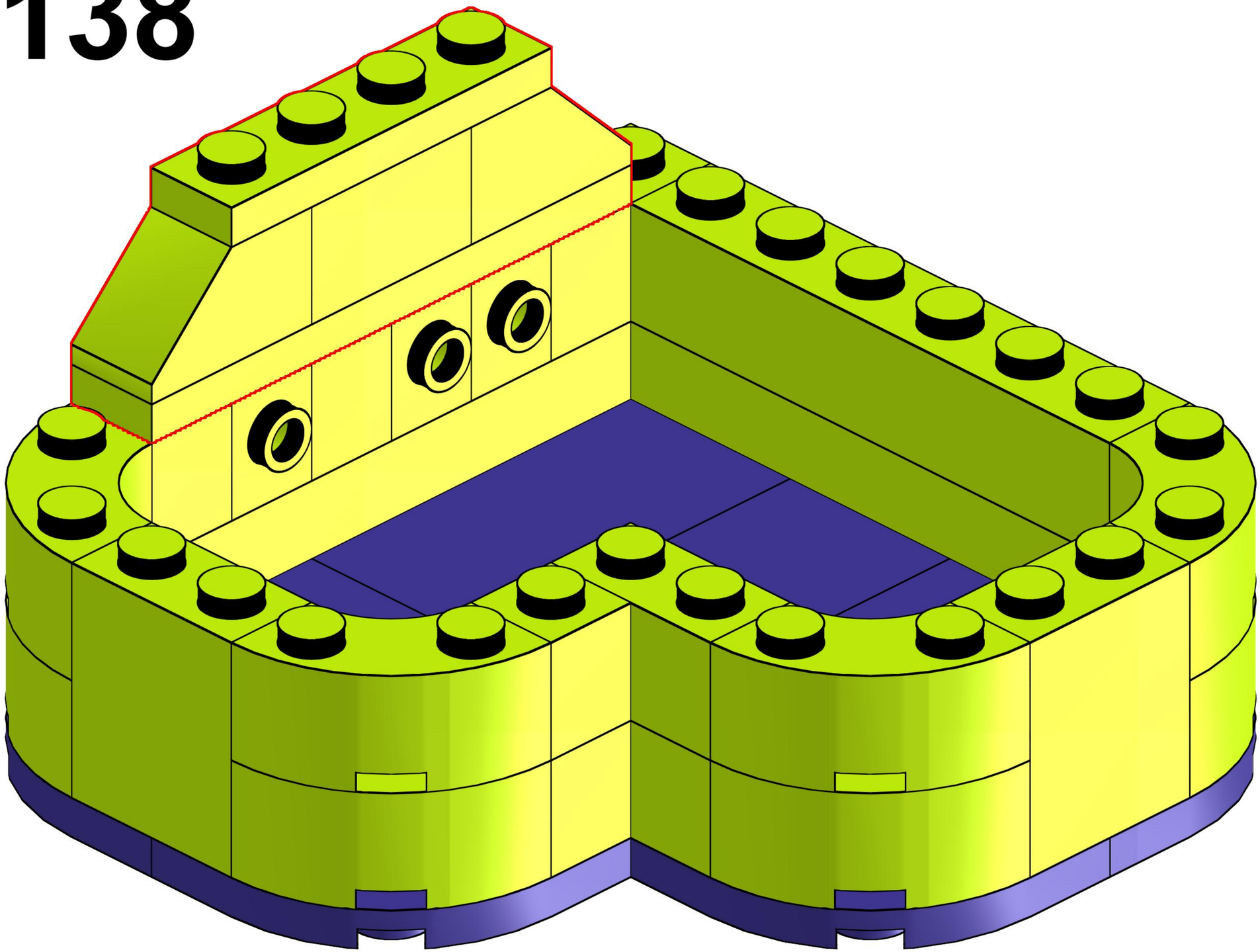

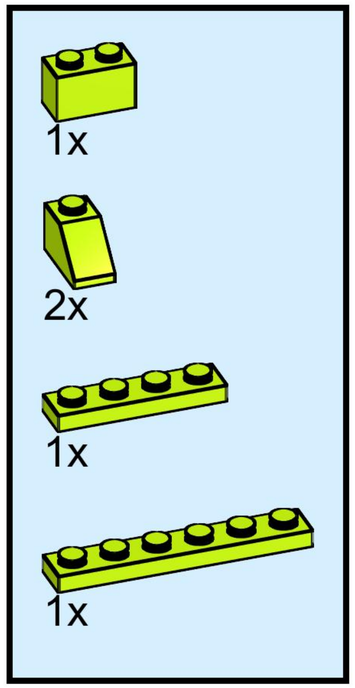

139

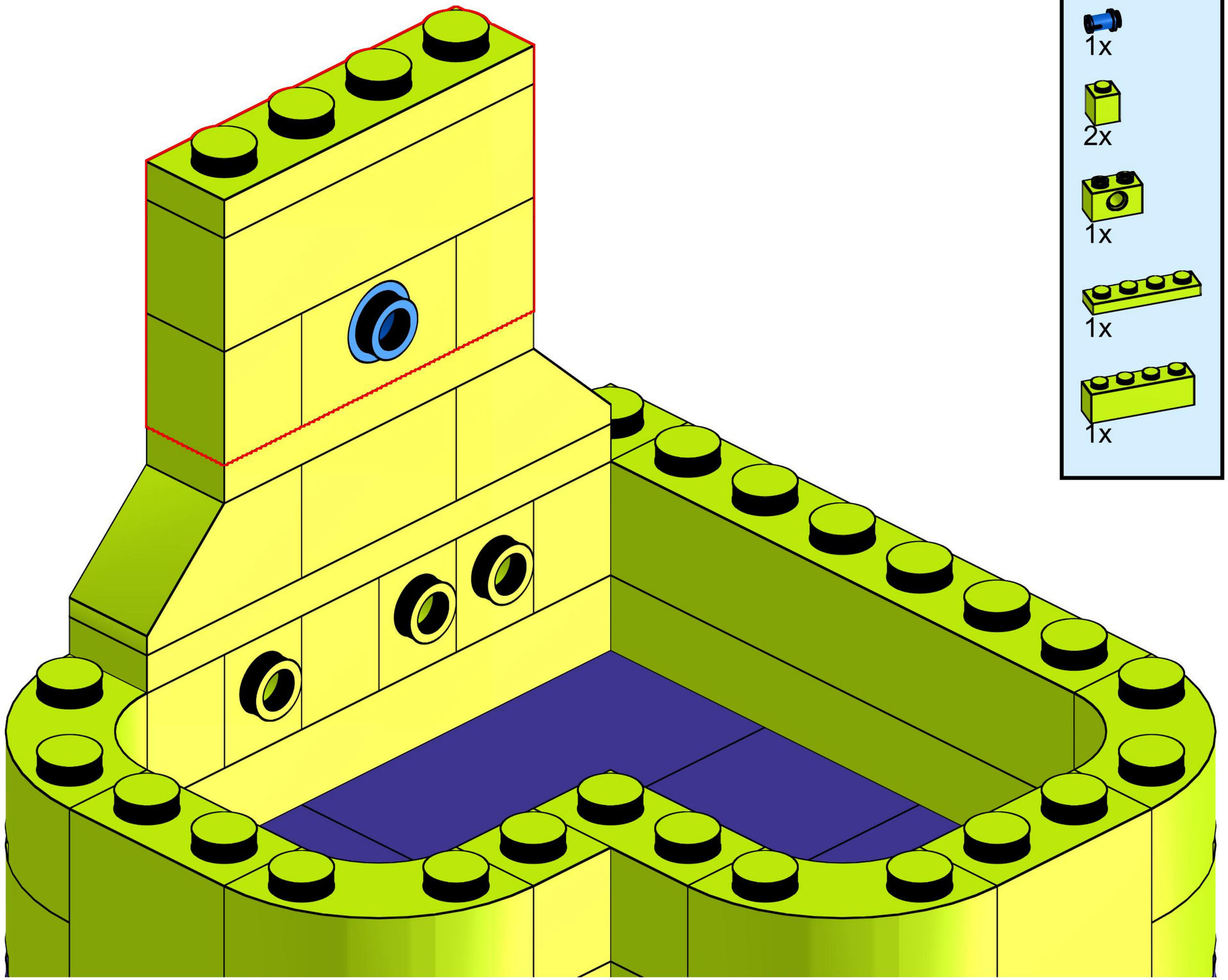

140

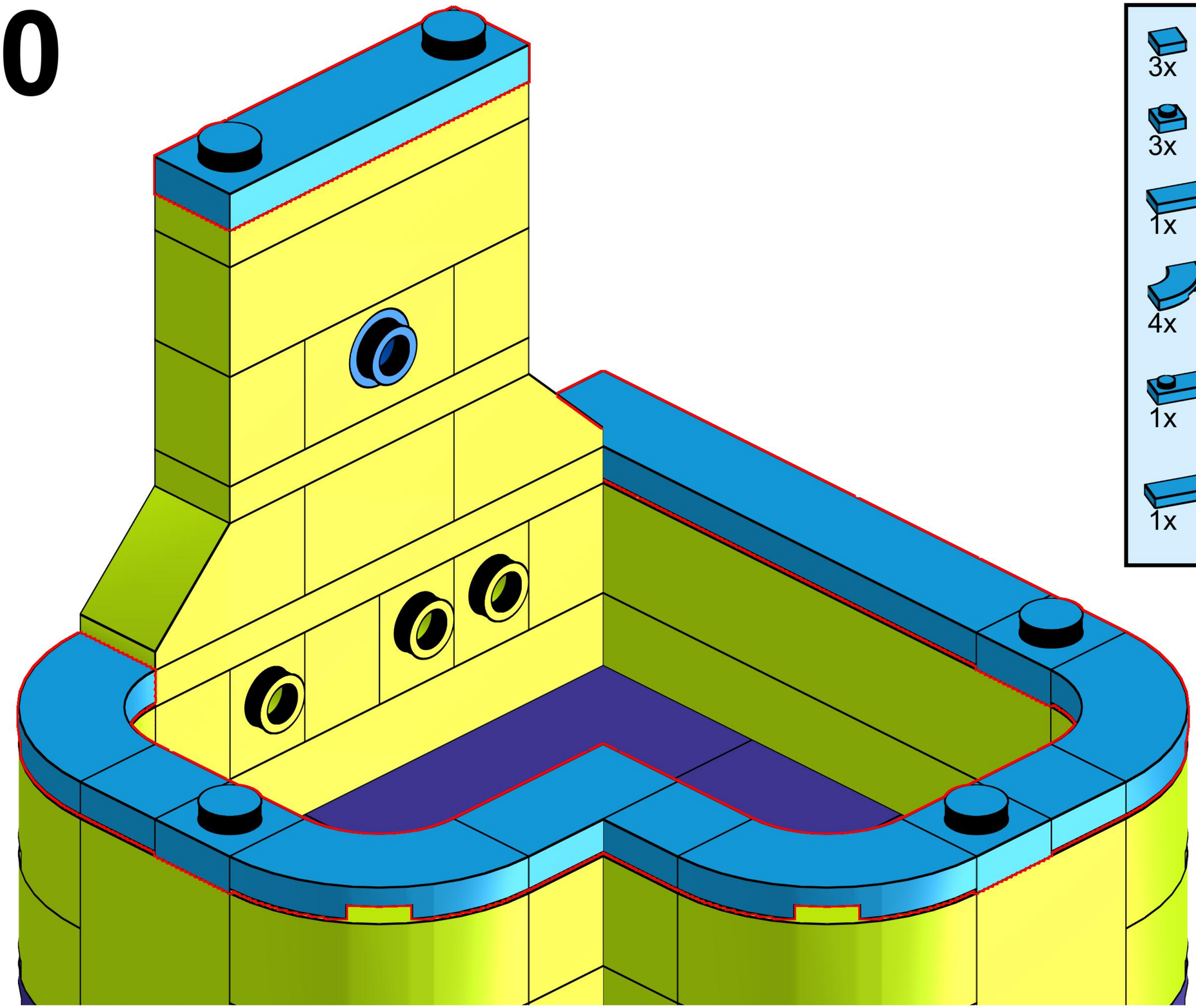

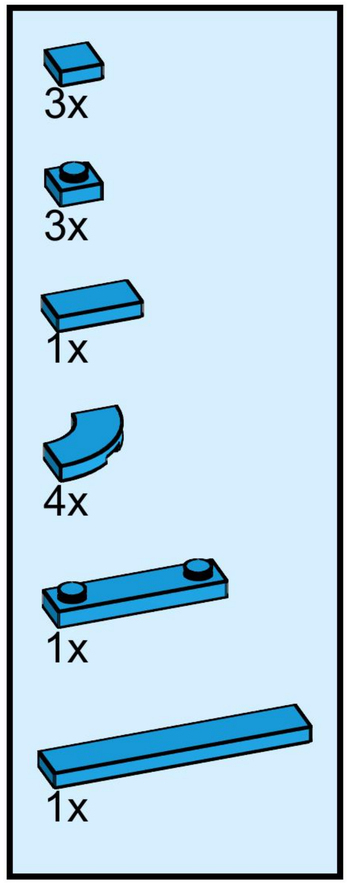

141

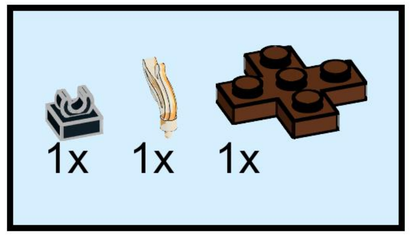

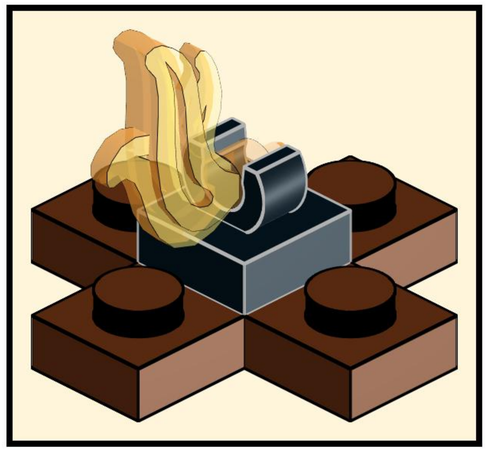

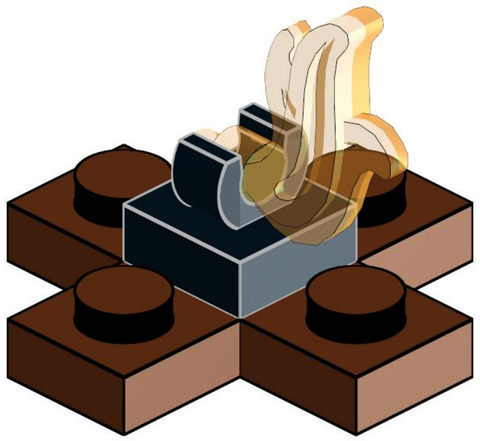

142

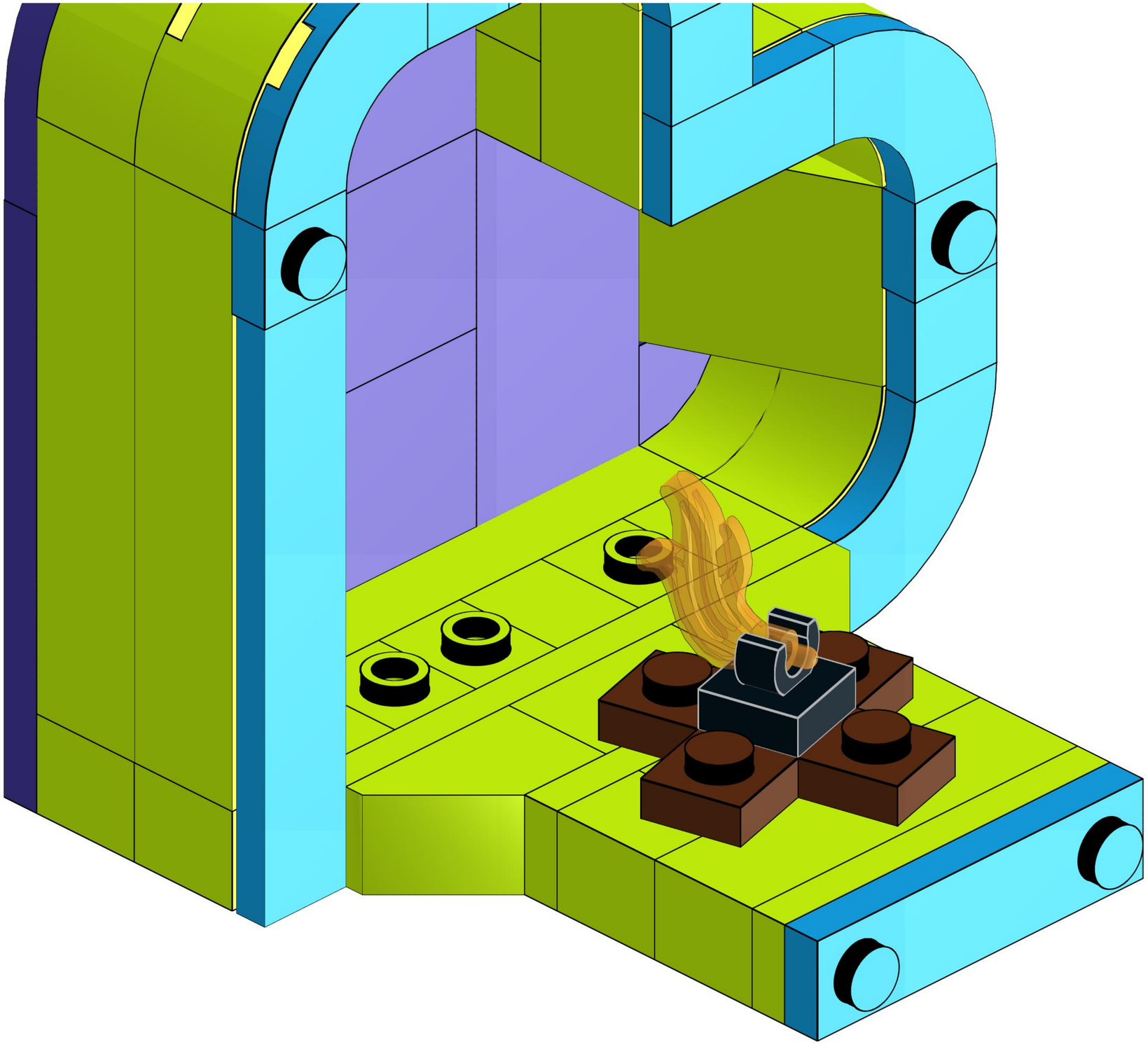

143

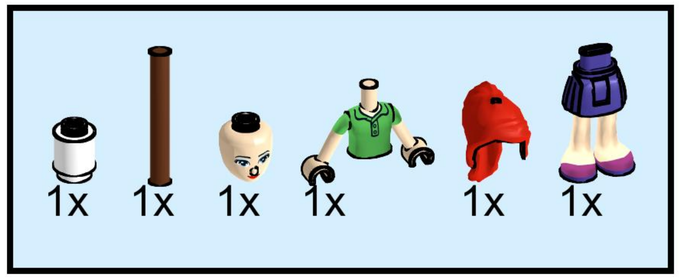

Studio does not have the models for Mia or her bunny. This minidoll and teddy bear are their stunt doubles!

144

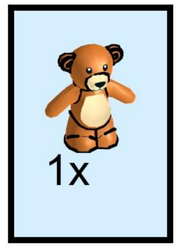

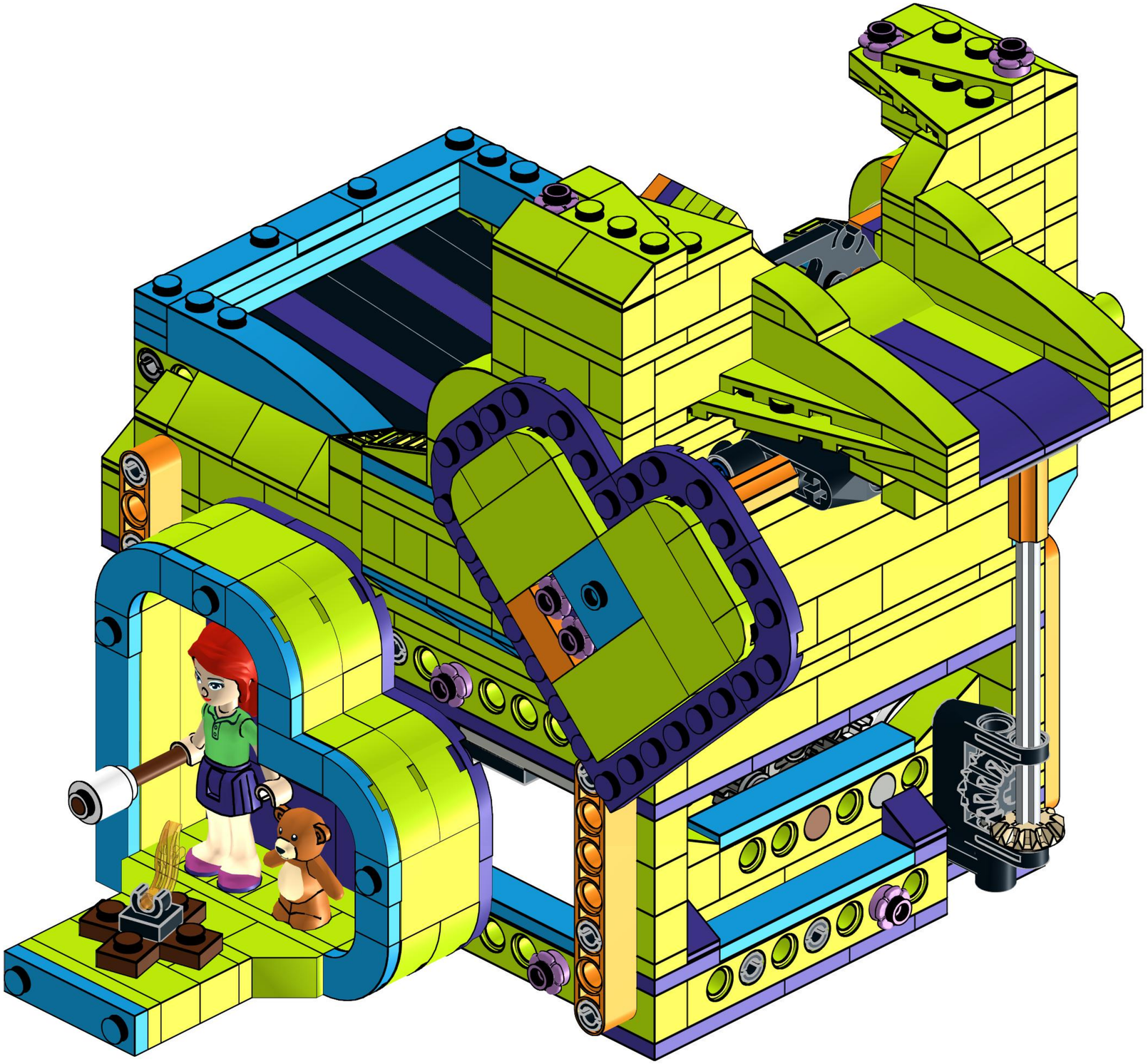

Live, love, care and be kind. - Mia

Module Revision Notes

Verson 1.1 - Initial Release -- Feb-19

1x
18654, 11

1x
15712, 11

24x
2780, 11

1x
22961, 11

1x
32013, 11

1x
15100, 11

3x
32270, 11

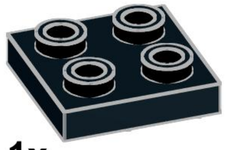

1x
2444, 11

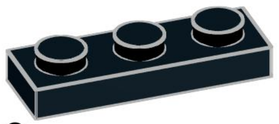

2x
3623, 11

2x
32054, 11

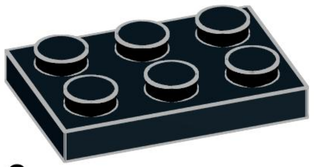

2x
3021, 11

2x
3705, 11

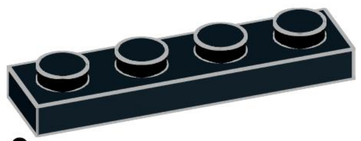

3x
3710, 11

4x
87408, 11

2x
3706, 11

1x
3707, 11

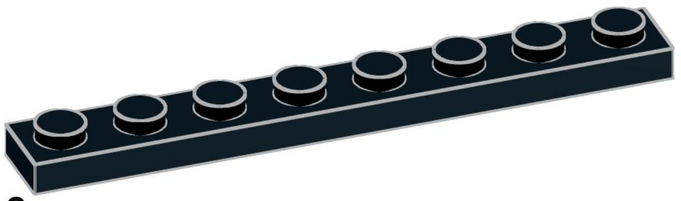

2x
3460, 11

2x
3702, 11

1x
3034, 11

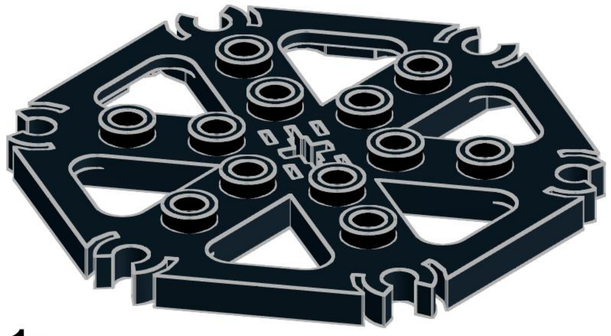

1x
64566, 11

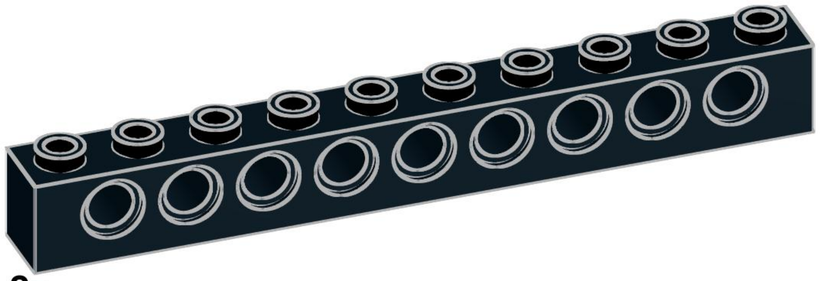

2x
2730, 11

6x
32525, 11

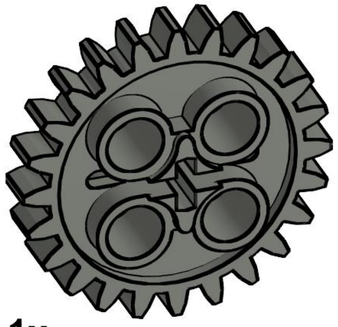

1x
3648, 85

1x
4265c, 86

3x
3713, 86

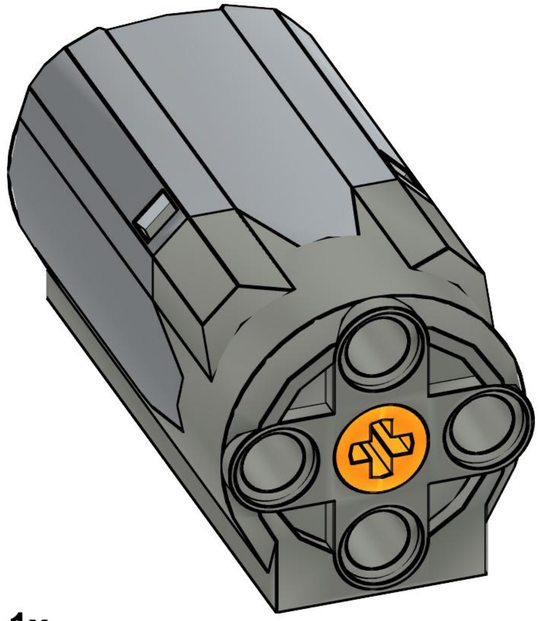

1x
58120c01, 86

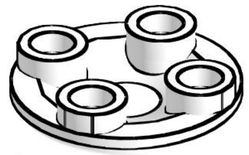

2x
2654, 1

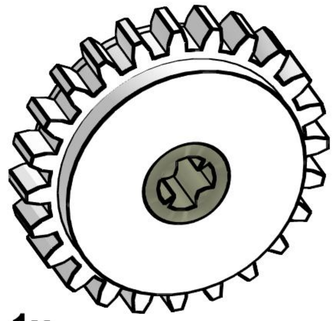

1x
60c01, 1

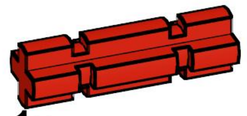

1x
32062, 5

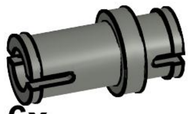

6x
32002, 85

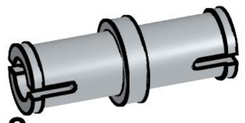

2x
3673, 86

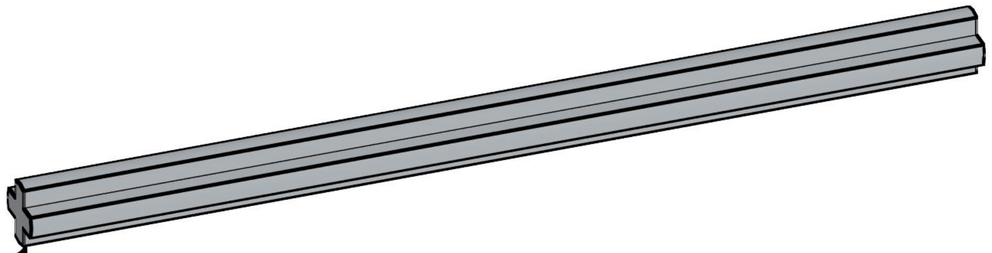

1x
60485, 86

2x
10928, 85

1x
3062b, 1

1x
92257, 5

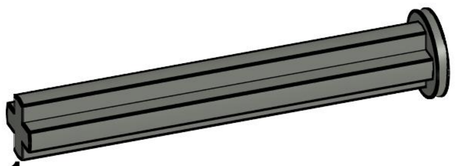

1x
87083, 85

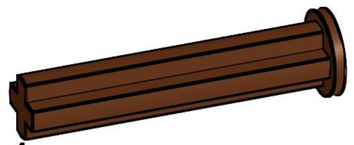

1x
24316, 88

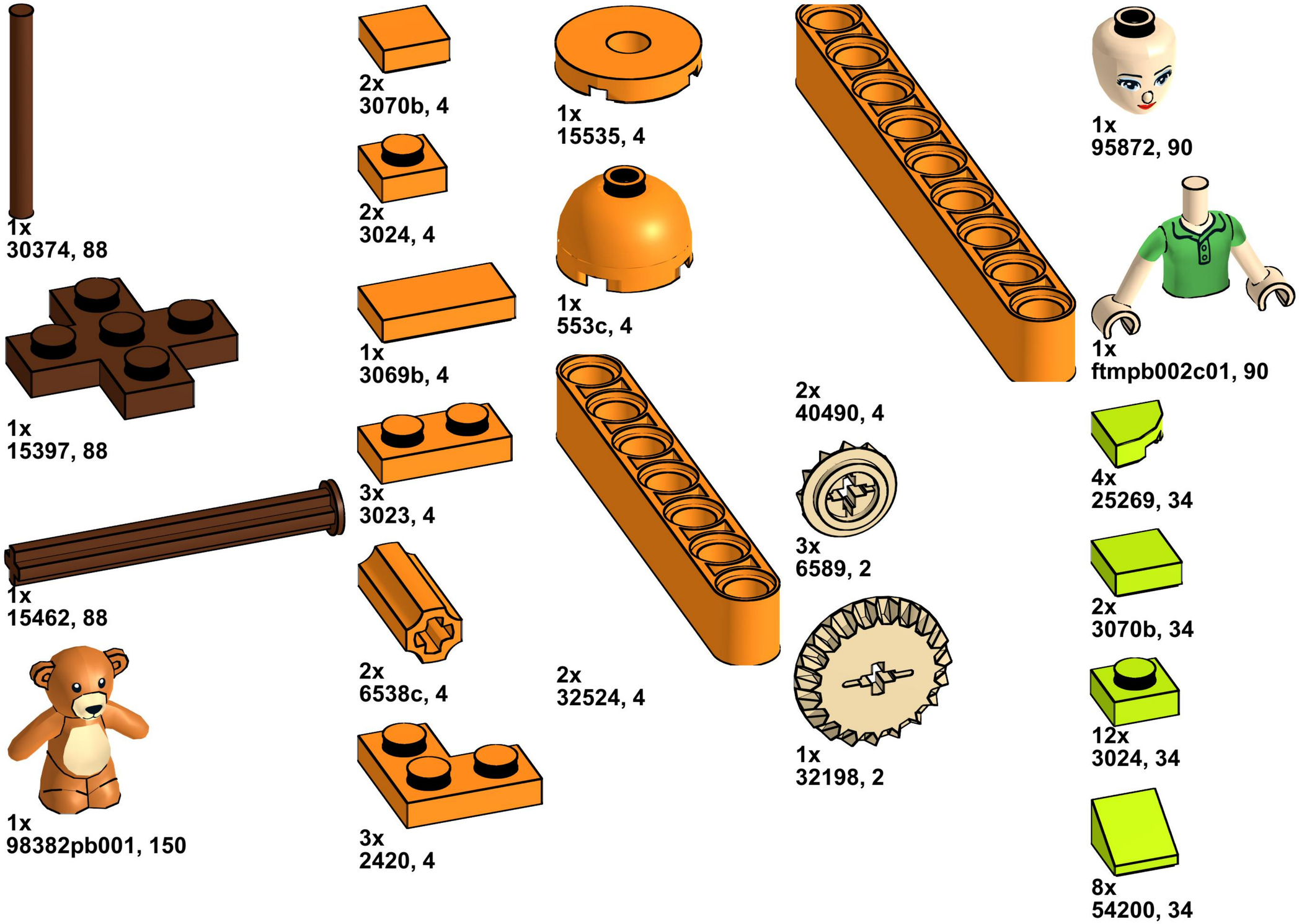
1x
30374, 88
1x
15397, 88
1x
15462, 88
1x
98382pb001, 150
2x
3070b, 4
2x
3024, 4
1x
3069b, 4
3x
3023, 4
2x
6538c, 4
3x
2420, 4
1x
15535, 4
1x
553c, 4
2x
32524, 4
2x
40490, 4
3x
6589, 2
1x
32198, 2
1x
95872, 90
1x
ftmpb002c01, 90
4x
25269, 34
2x
3070b, 34
12x
3024, 34
8x
54200, 34

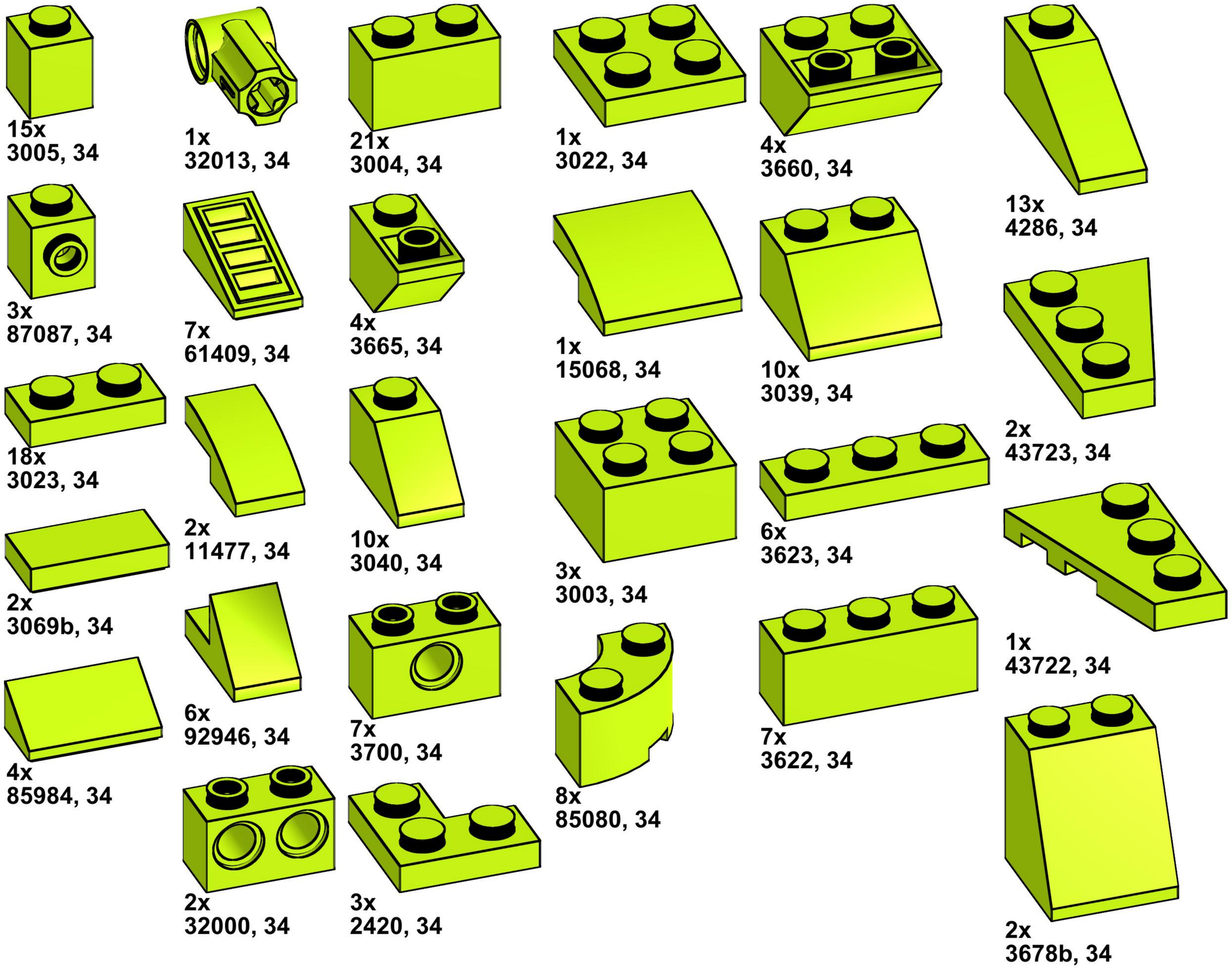
15x
3005, 34
1x
32013, 34
21x
3004, 34
1x
3022, 34
4x
3660, 34
13x
4286, 34
3x
87087, 34
7x
61409, 34
4x
3665, 34
1x
15068, 34
10x
3039, 34
18x
3023, 34
2x
11477, 34
10x
3040, 34
3x
3003, 34
6x
3623, 34
2x
43723, 34
2x
3069b, 34
6x
92946, 34
7x
3700, 34
8x
85080, 34
7x
3622, 34
1x
43722, 34
4x
85984, 34
2x
32000, 34
3x
2420, 34
2x
3678b, 34

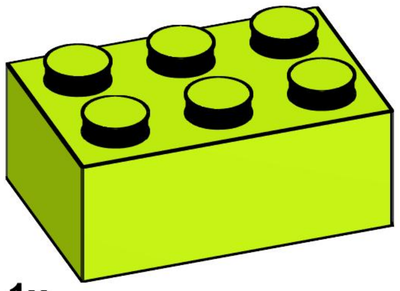

1x
3002, 34

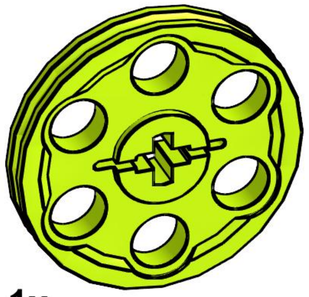

1x
4185, 34

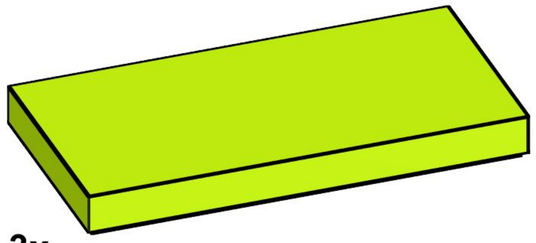

3x
87079, 34

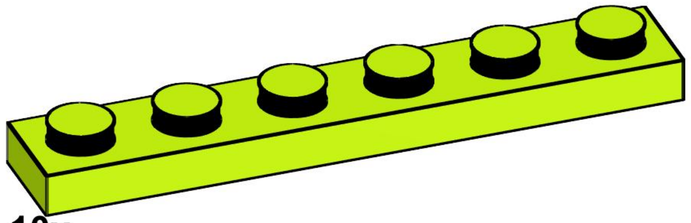

10x
3666, 34

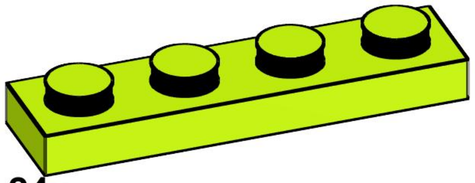

24x
3710, 34

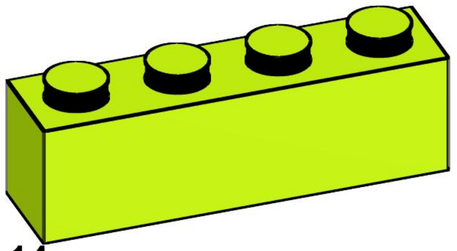

14x
3010, 34

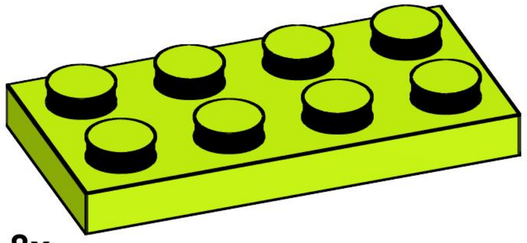

8x
3020, 34

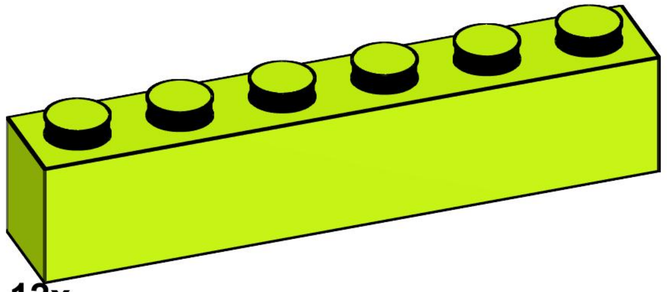

12x
3009, 34

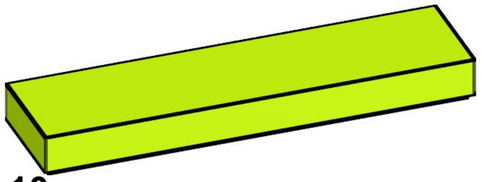

10x
2431, 34

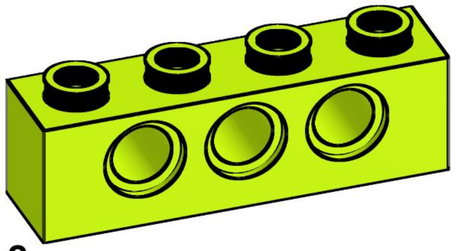

2x
3701, 34

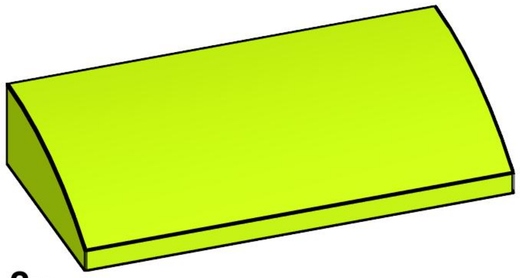

2x
88930, 34

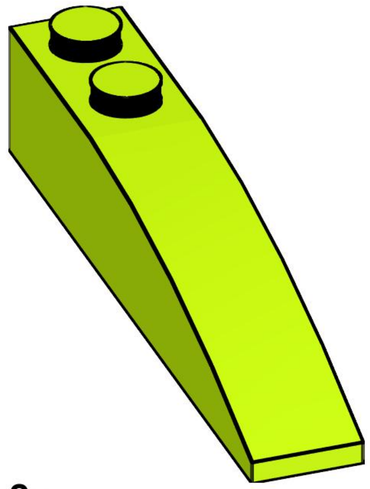

2x
42022, 34

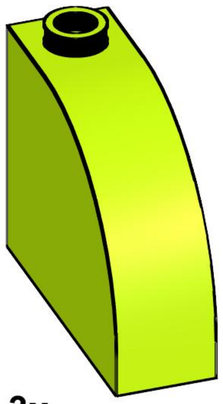

3x
33243, 34

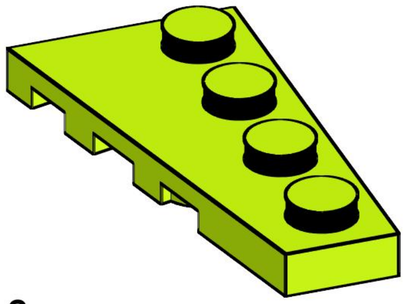

2x
41769, 34

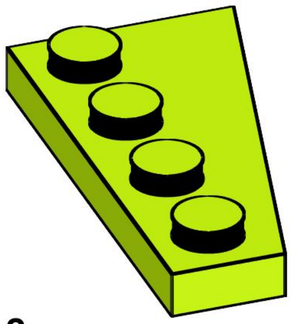

2x
41770, 34

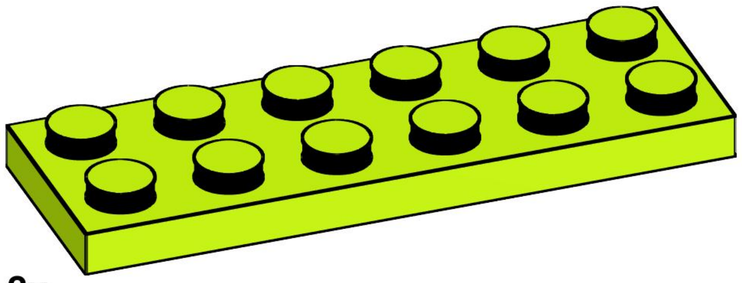

2x
3795, 34

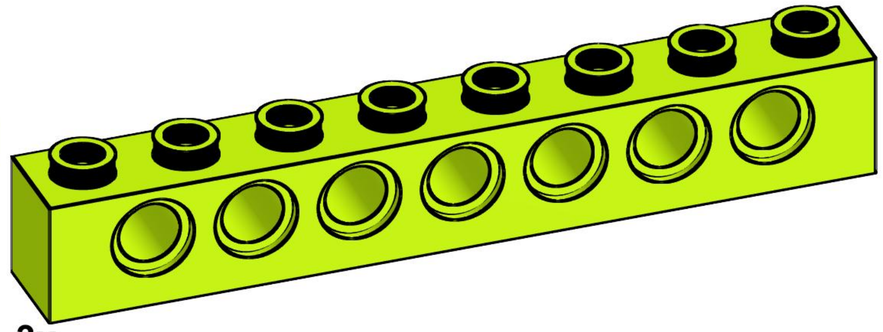

3x
3702, 34

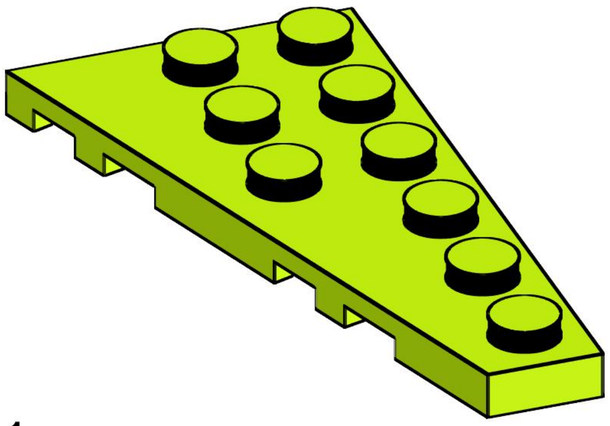

1x
54383, 34

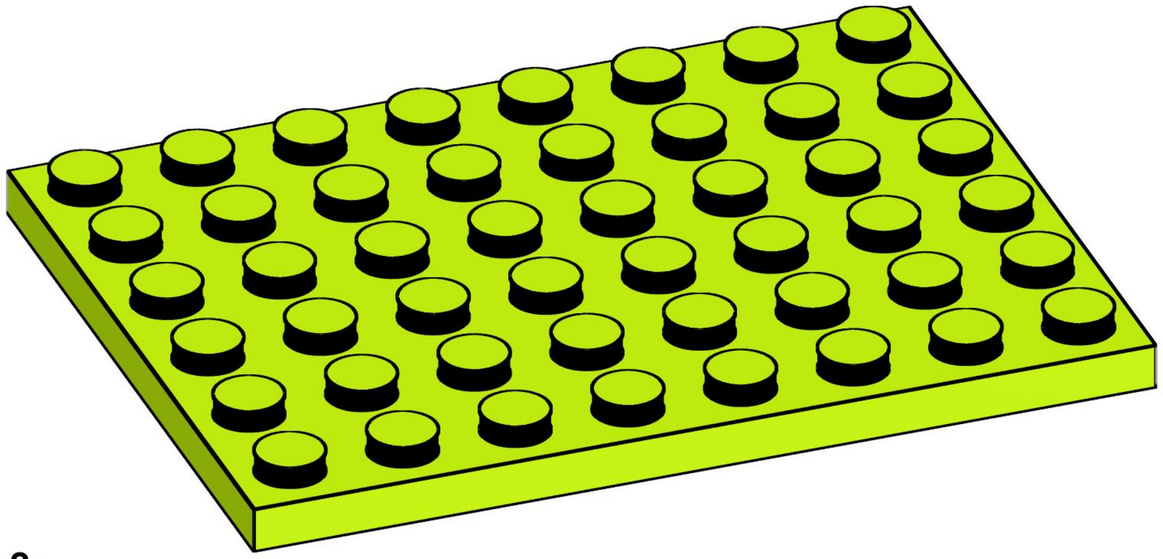

2x
3036, 34

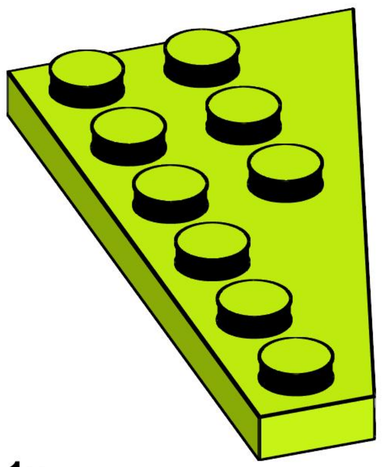

1x
54384, 34

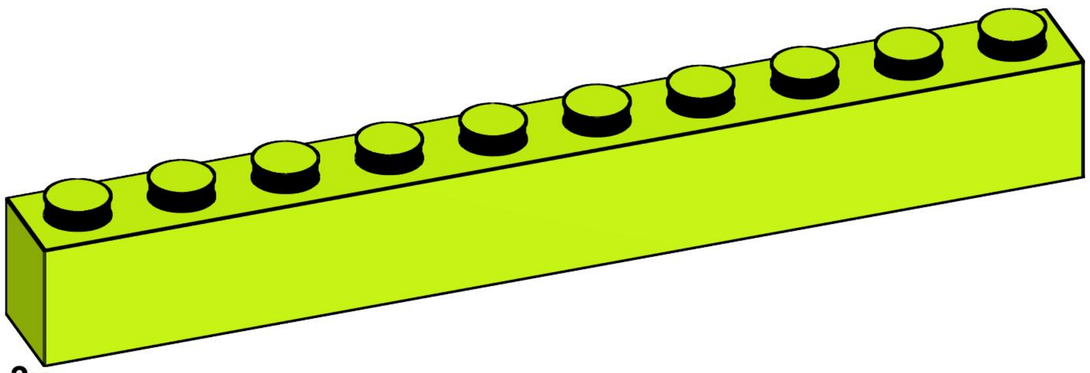

3x
6111, 34

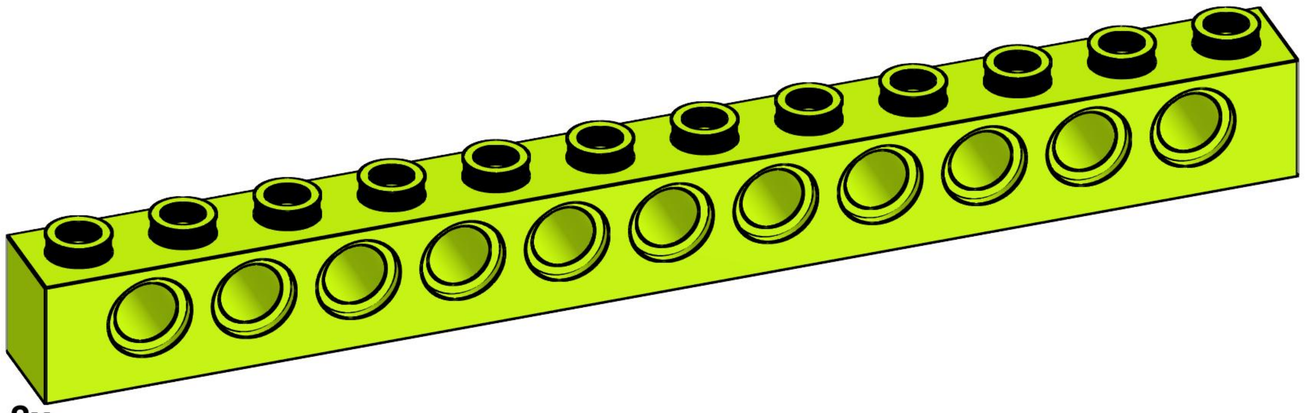

2x
3895, 34

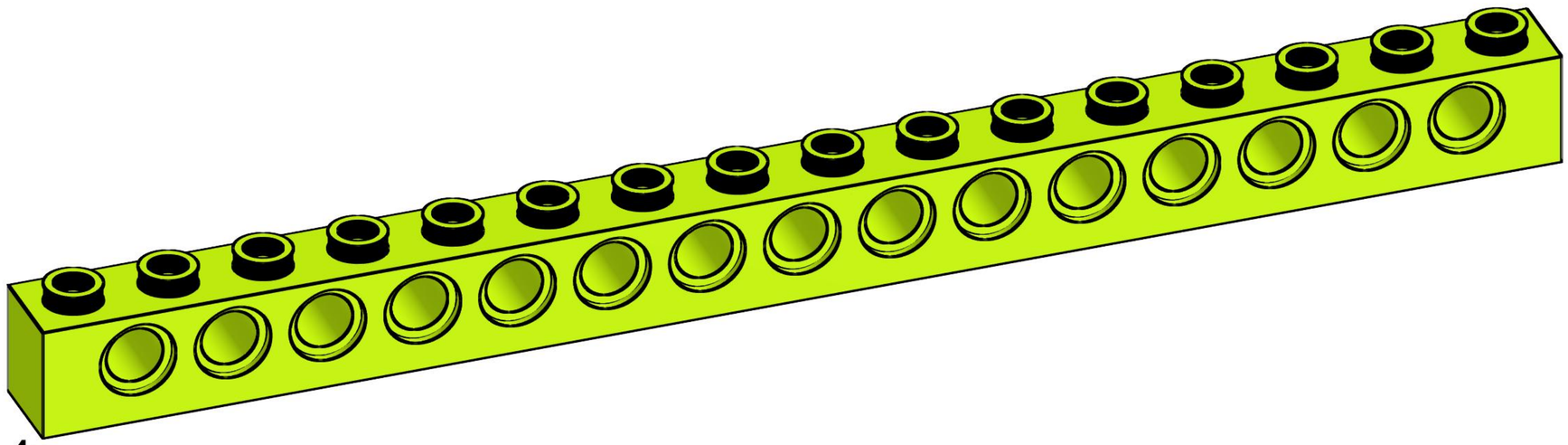

4x
3703, 34

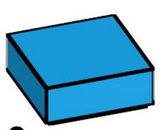

3x
3070b, 153

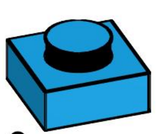

3x
3024, 153

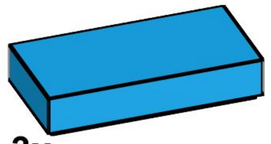

3x
3069b, 153

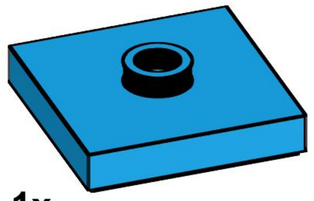

1x
87580, 153

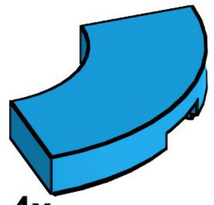

4x
27925, 153

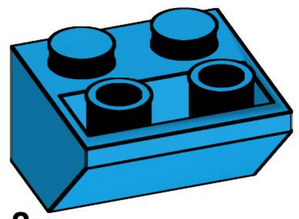

8x
3660, 153

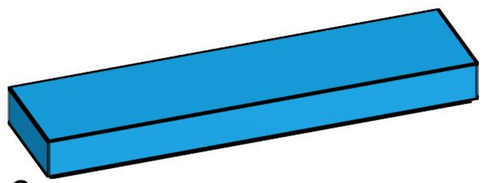

2x
2431, 153

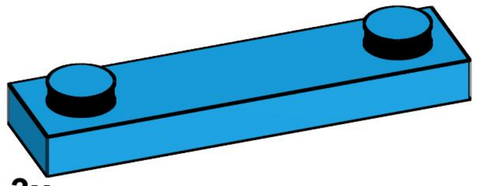

3x
92593, 153

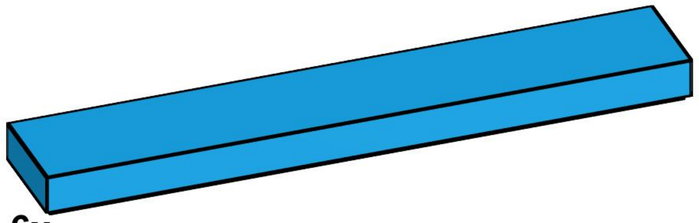

6x
6636, 153

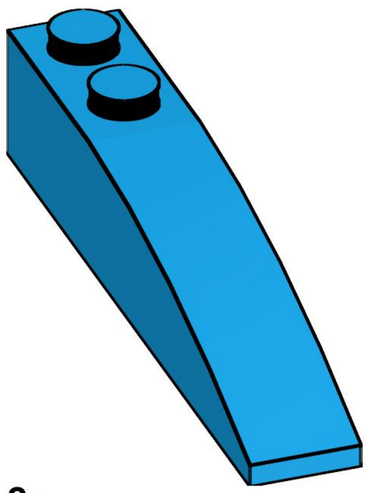

2x
42022, 153

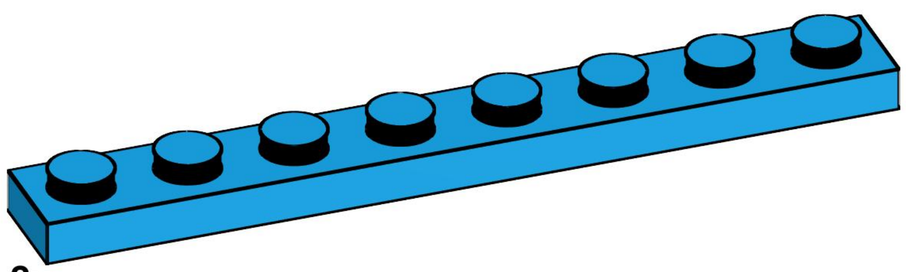

2x
3460, 153

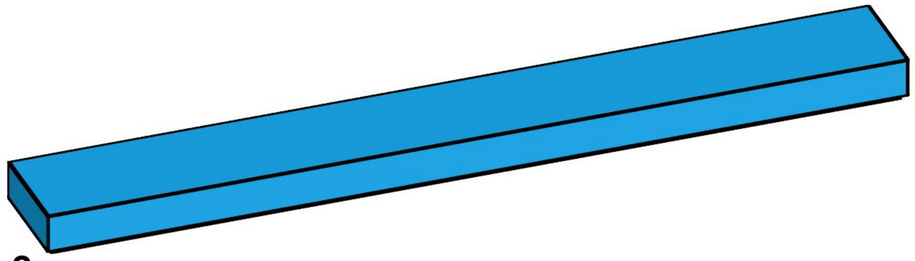

2x
4162, 153

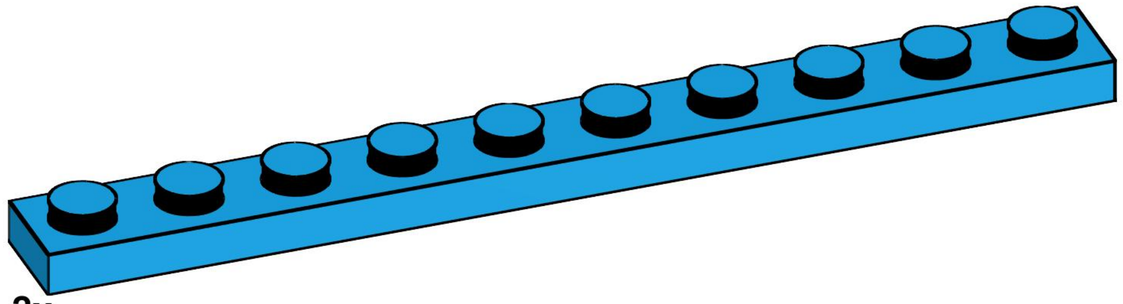

2x
4477, 153

10x
4274, 7

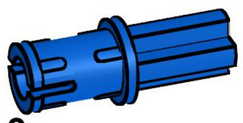

3x
43093, 7

8x
6558, 7

4x
25269, 89

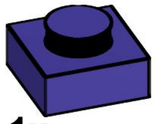

1x
3024, 89

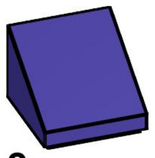

2x
54200, 89

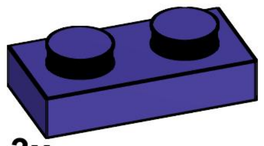

3x
3023, 89

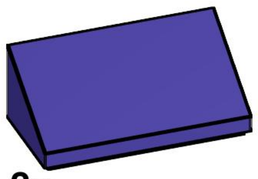

2x
85984, 89

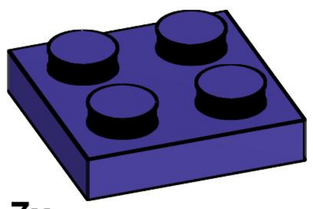

7x
3022, 89

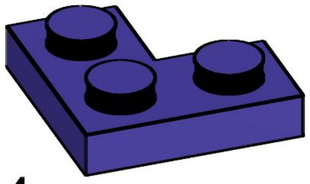

4x
2420, 89

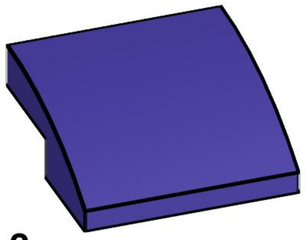

2x
15068, 89

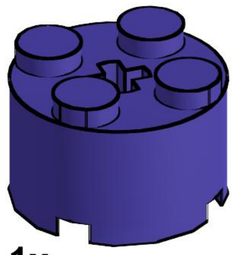

1x
3941, 89

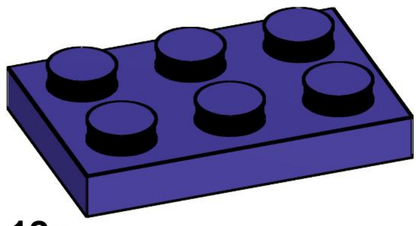

12x
3021, 89

1x
92252c00pb006, 89

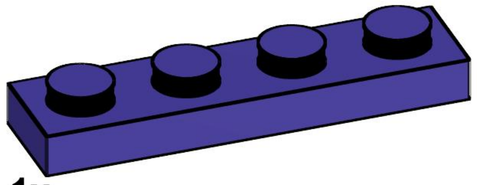

1x
3710, 89

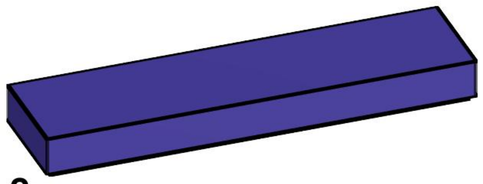

2x
2431, 89

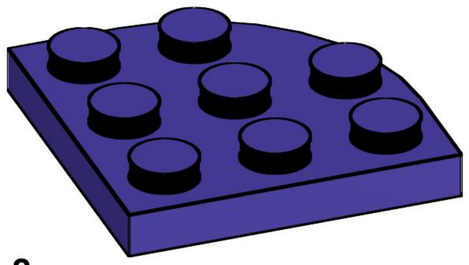

8x
30357, 89

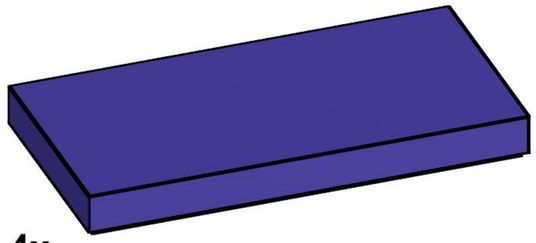

4x
87079, 89

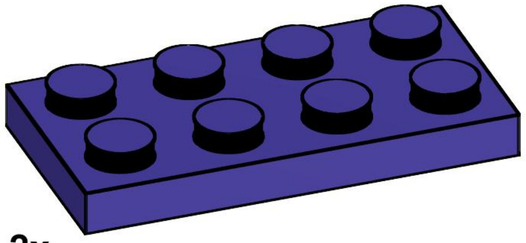

2x
3020, 89

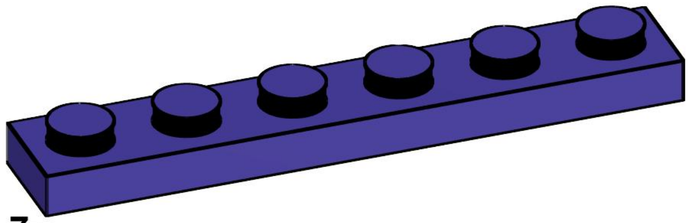

7x
3666, 89

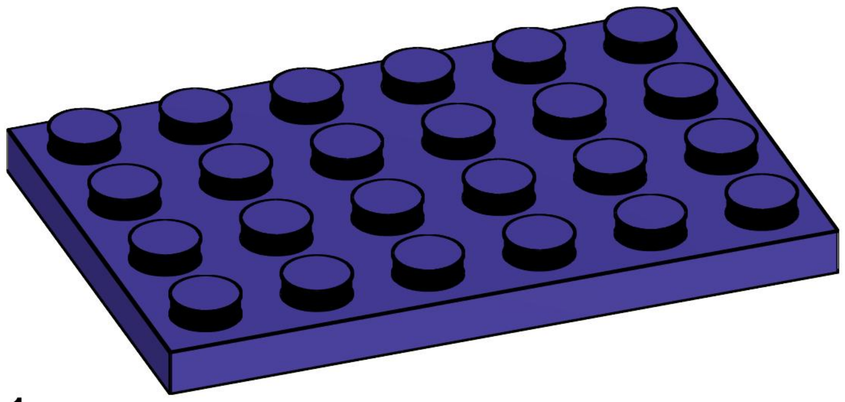

1x
3032, 89

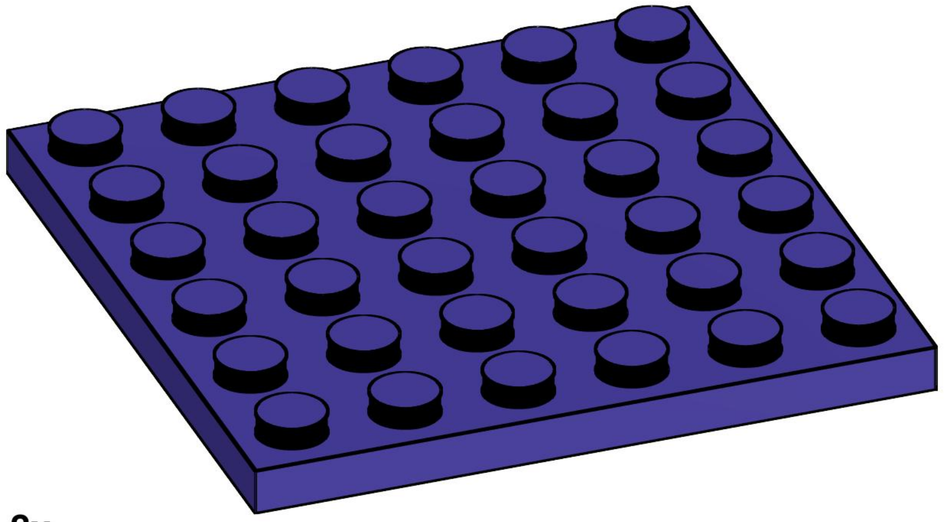

2x
3958, 89

10x
24866, 157

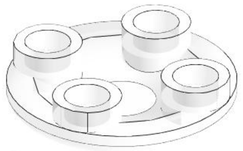

3x
2654, 12

1x
64647, 98

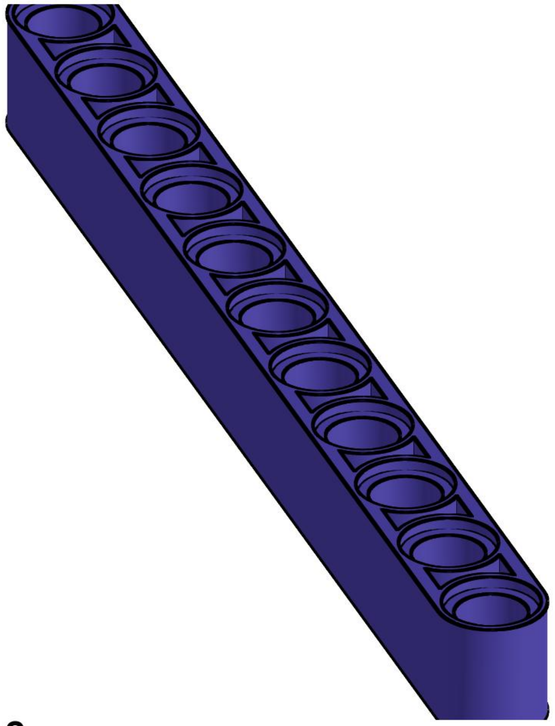

2x
32525, 89