ROTATING TRUSS

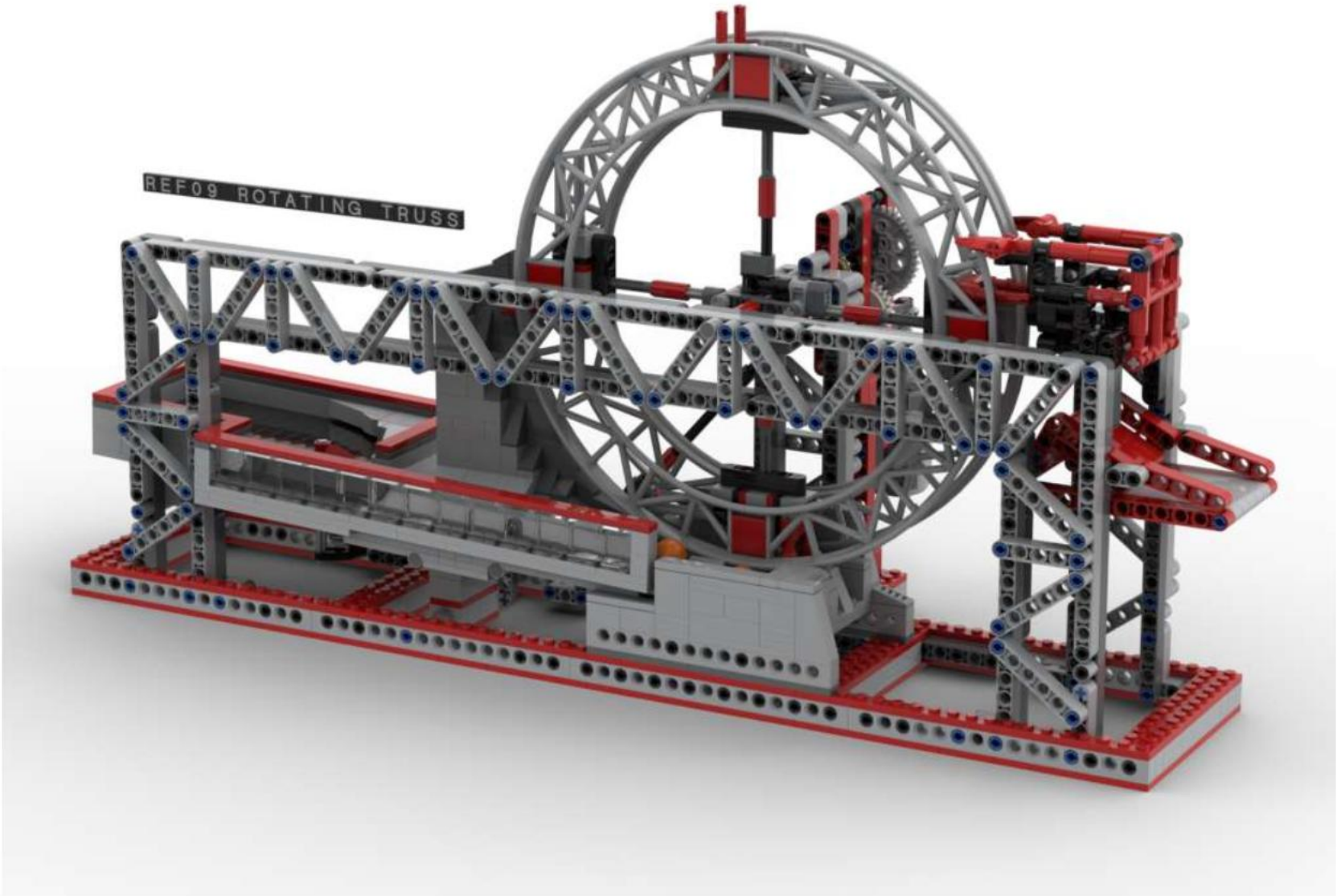

Version 1.0

Copyright 2019 Ryk Field
Attribution-NonCommercial 4.0 International (CC BY-NC 4.0)
https://creativecommons.org/licenses/by-nc/4.0/

INSPIRATION

A rotating, circular truss is commonly used in stage lighting at Performing Arts venues. These lighting trusses reminded me of a ring of rollercoaster track (25061) and I began to wonder how to they might be used in a Great Ball Contraption.

MOTIVATION

The 2019 Great Ball Pit Challenge was to build a module based around a rotating ring structure, able to move balls around the ring, in an "up and over" motion, similar to a ferris wheel.

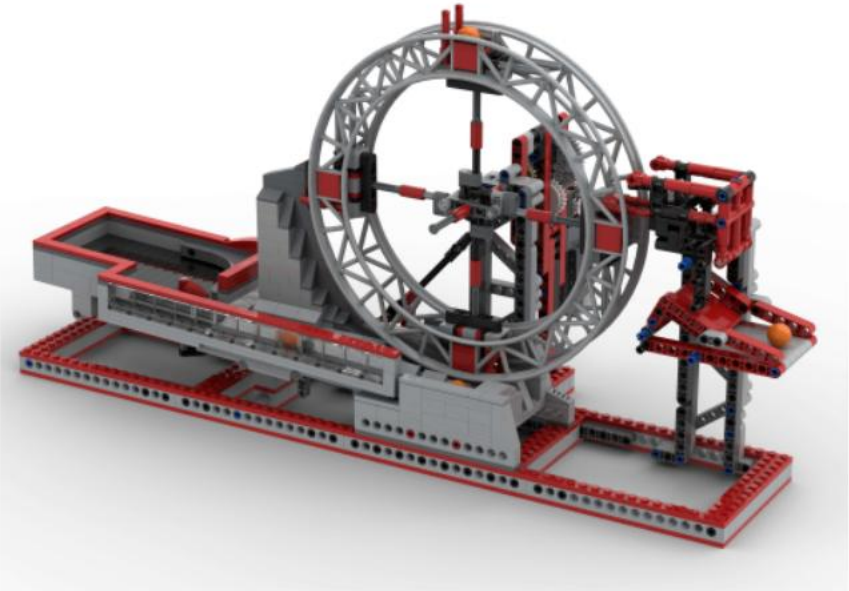

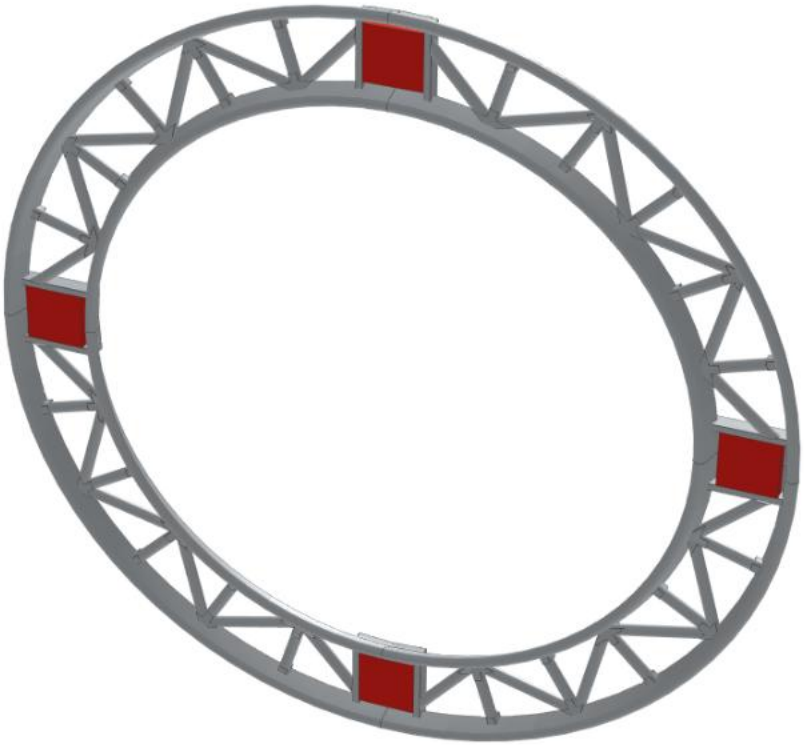

1

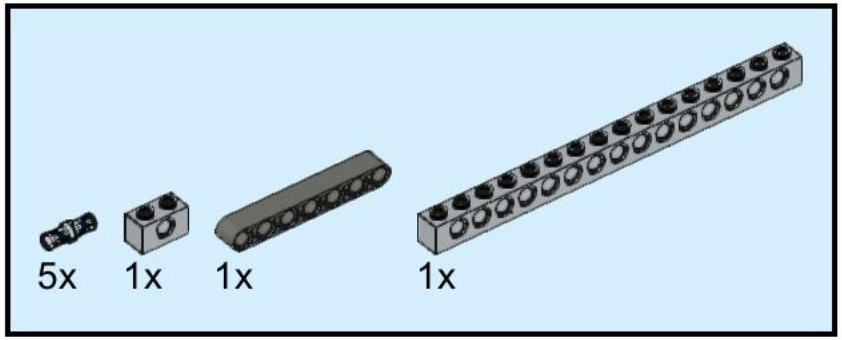

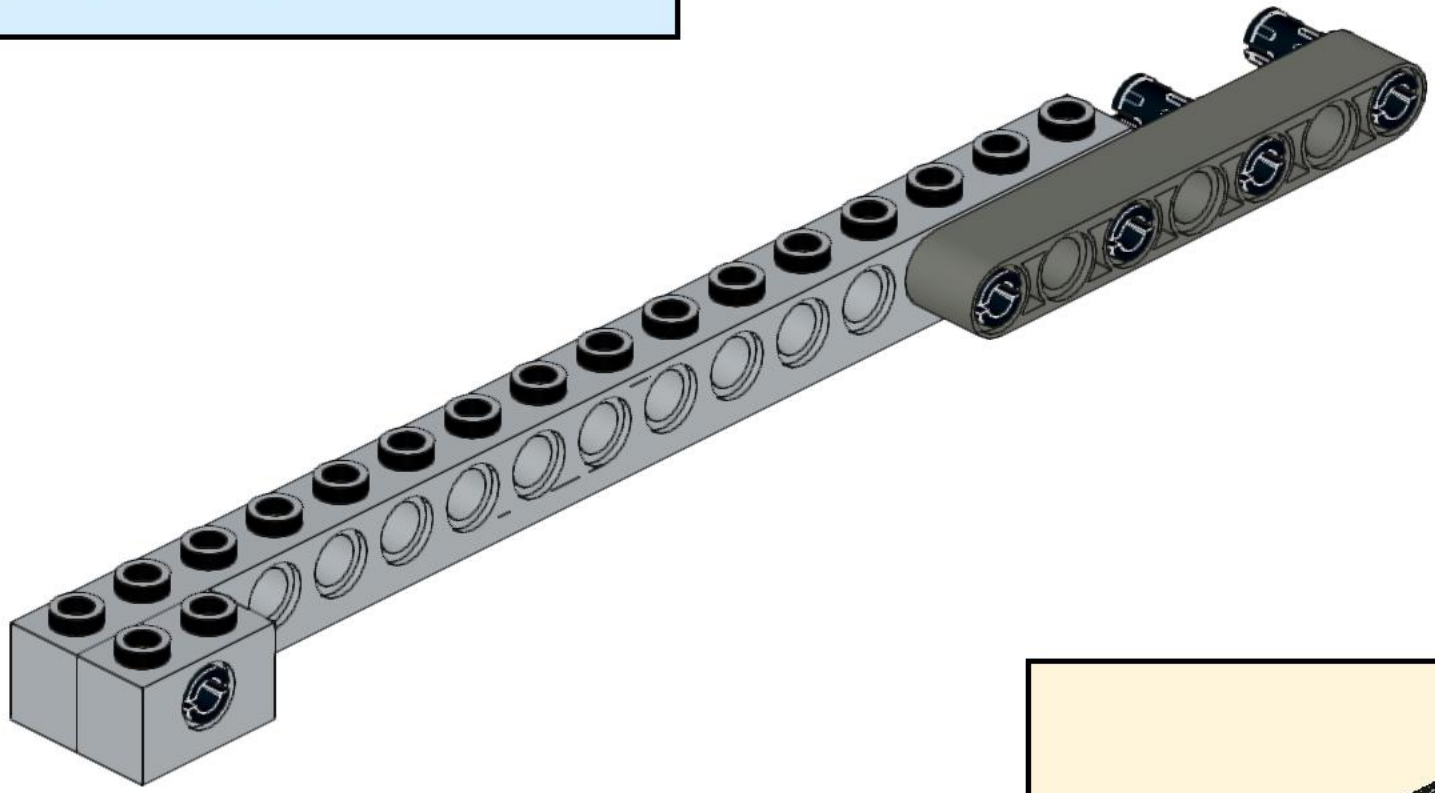

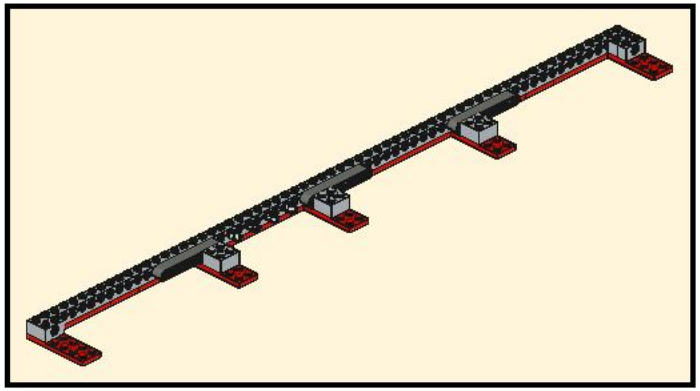

2

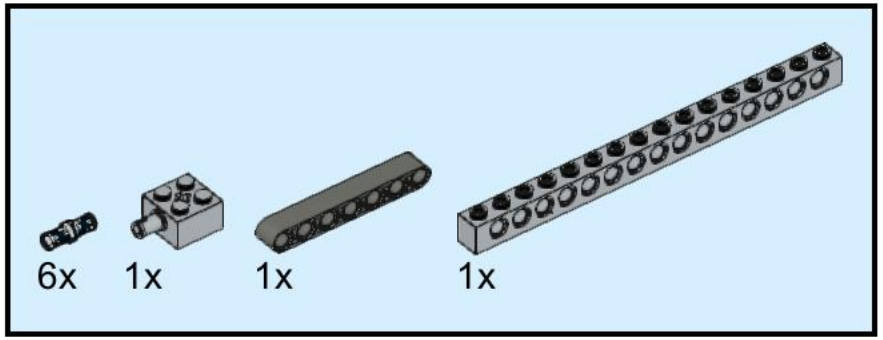

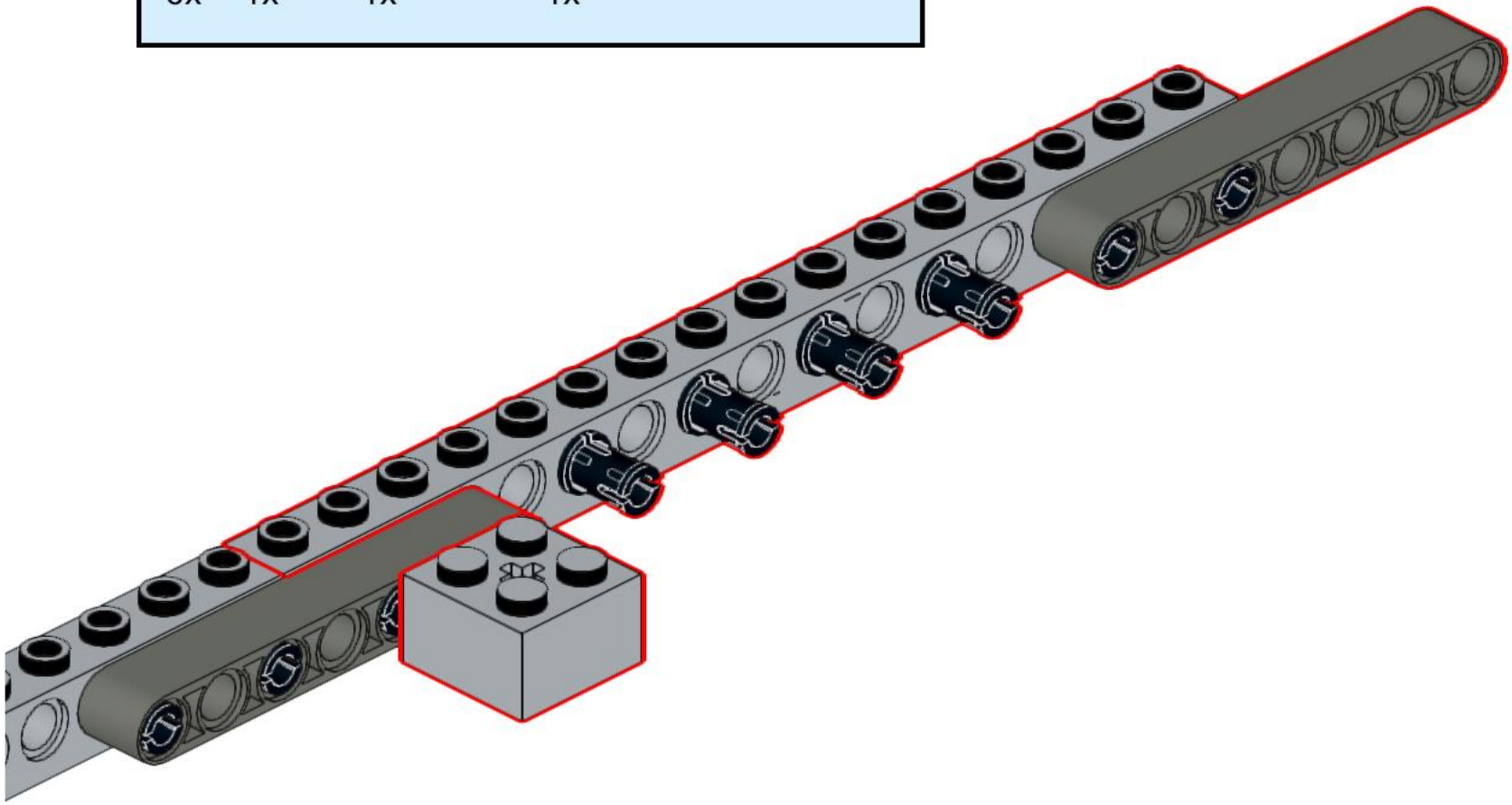

3

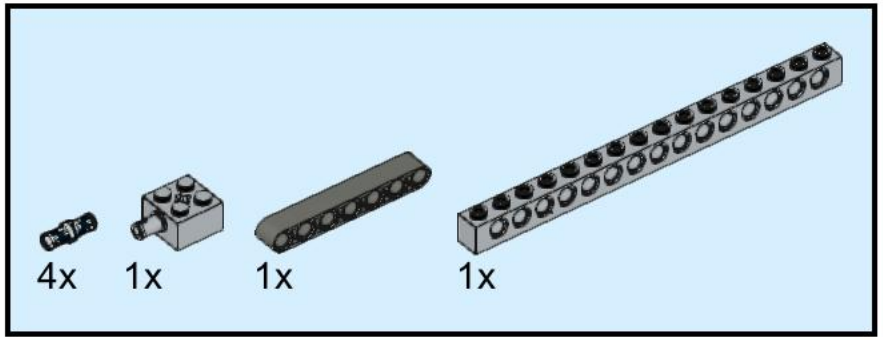

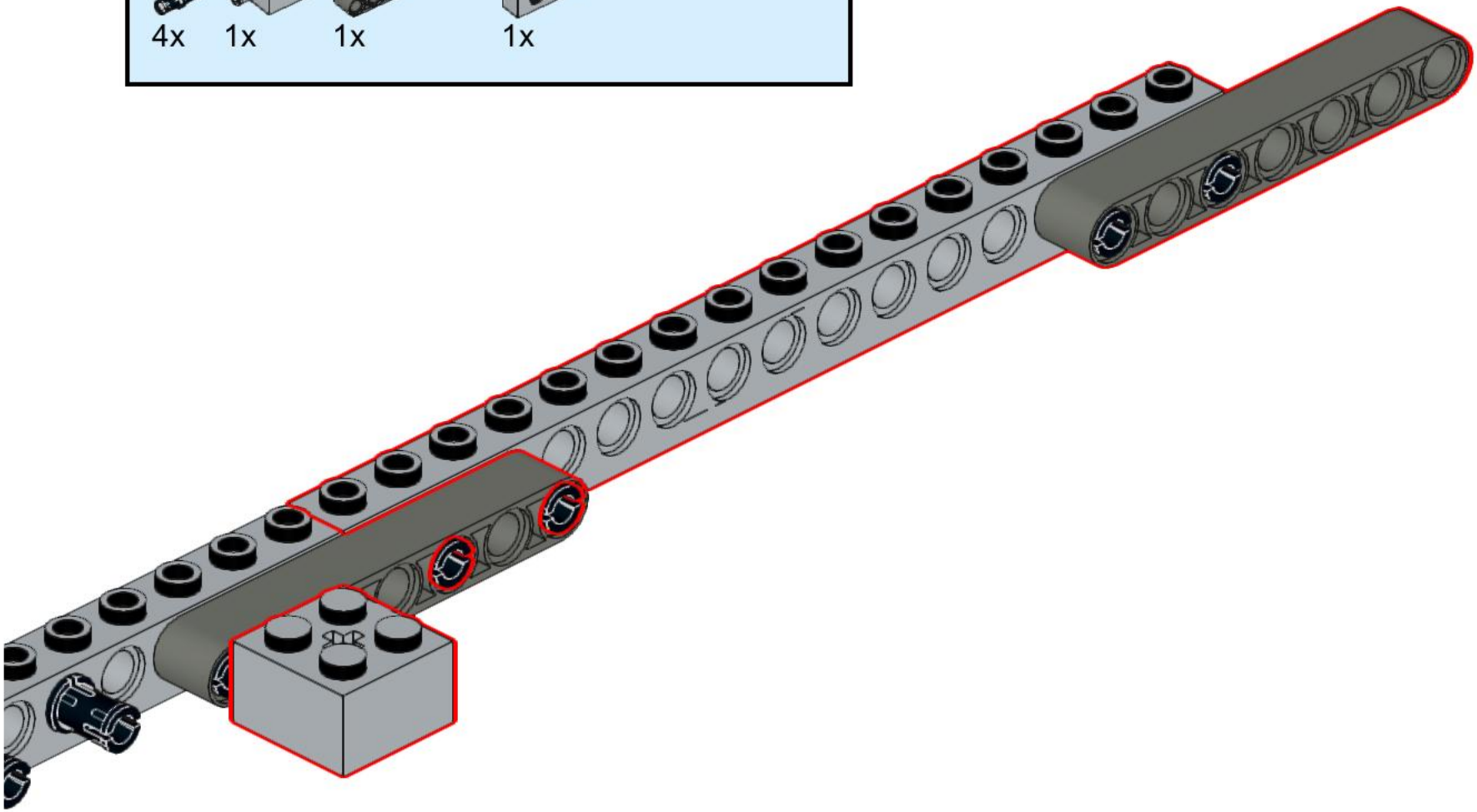

4

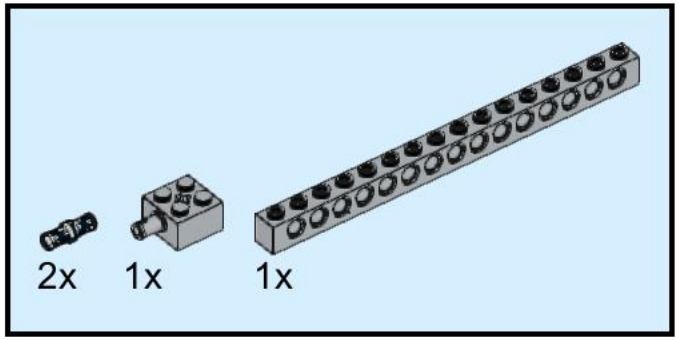

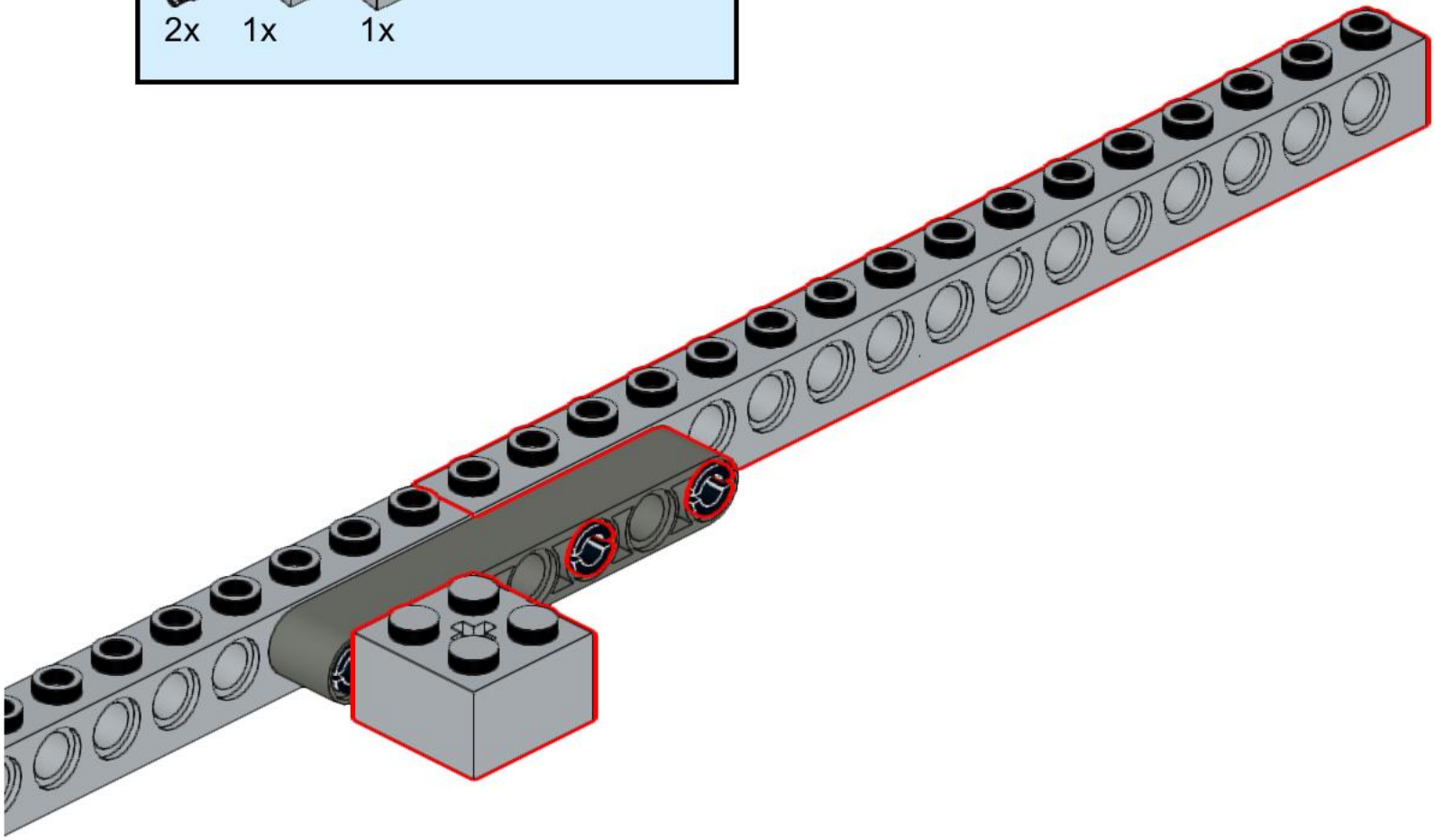

5

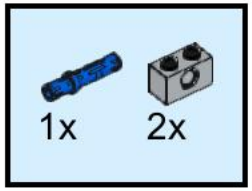

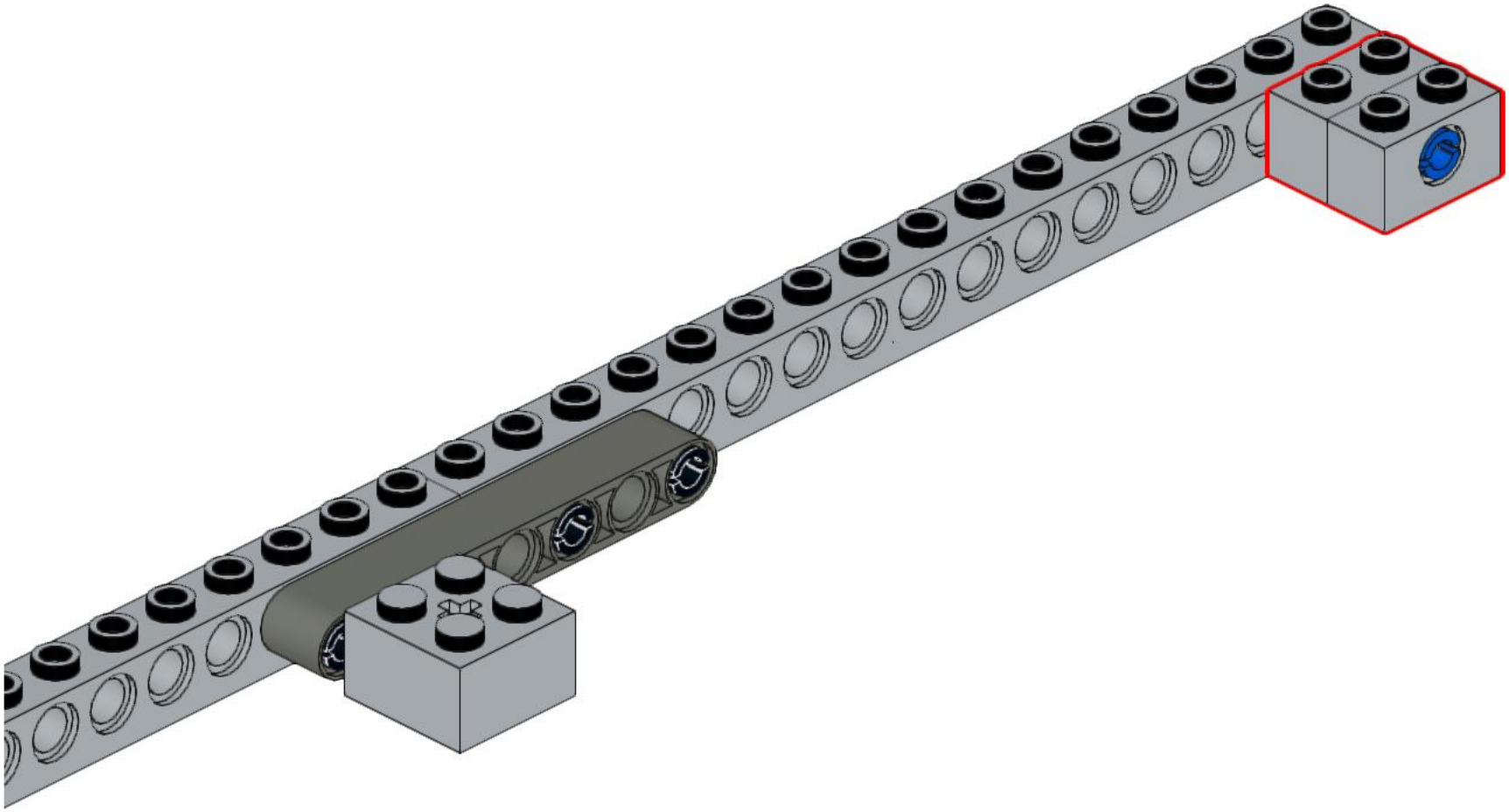

6

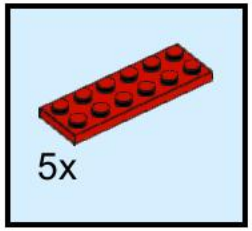

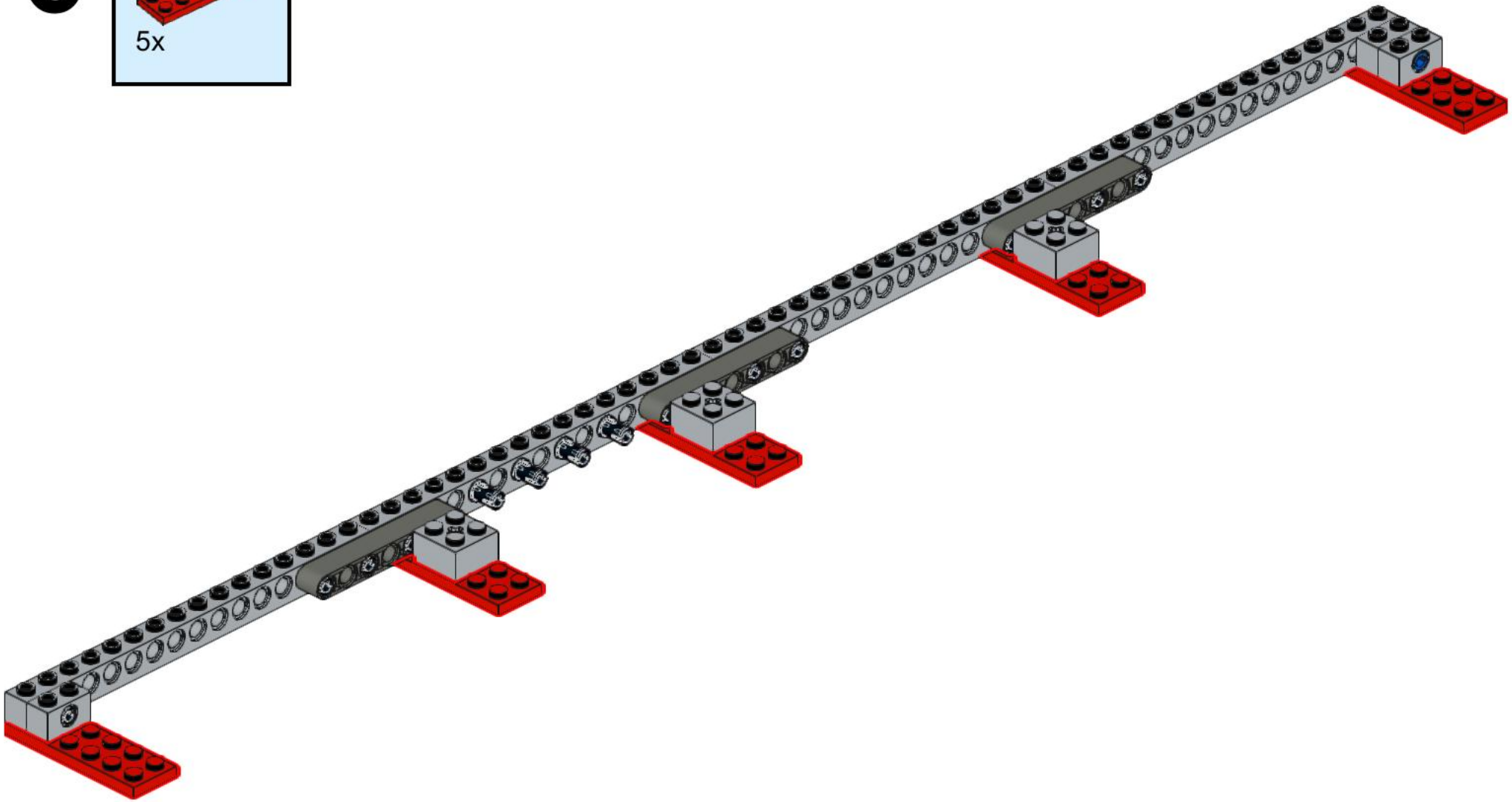

7

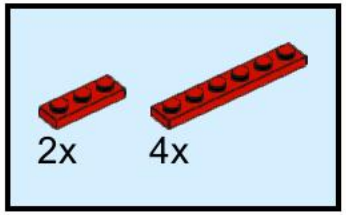

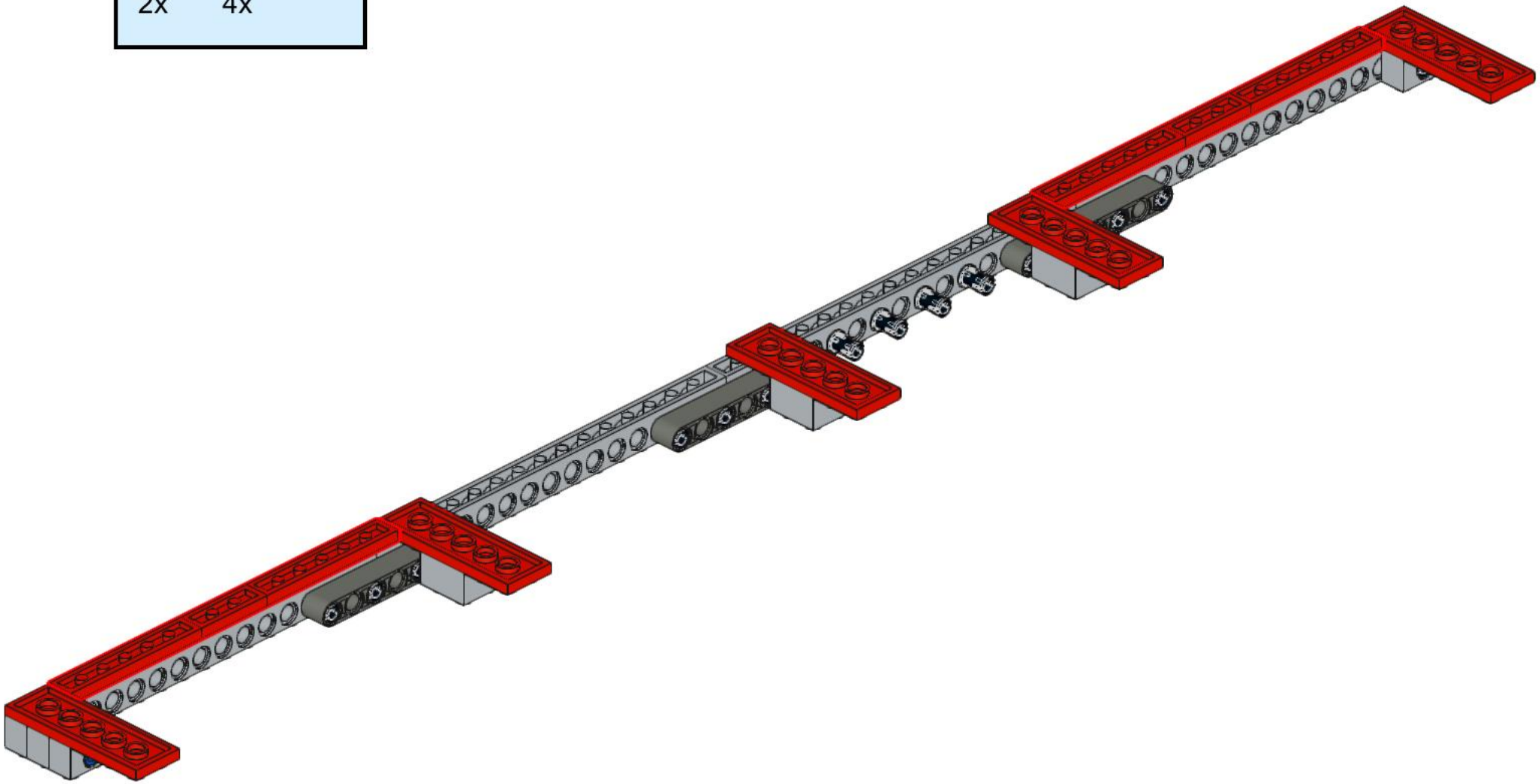

8

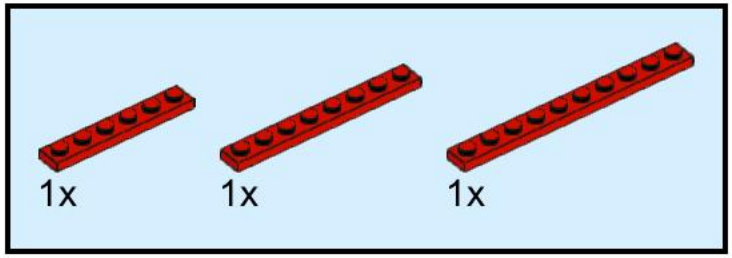

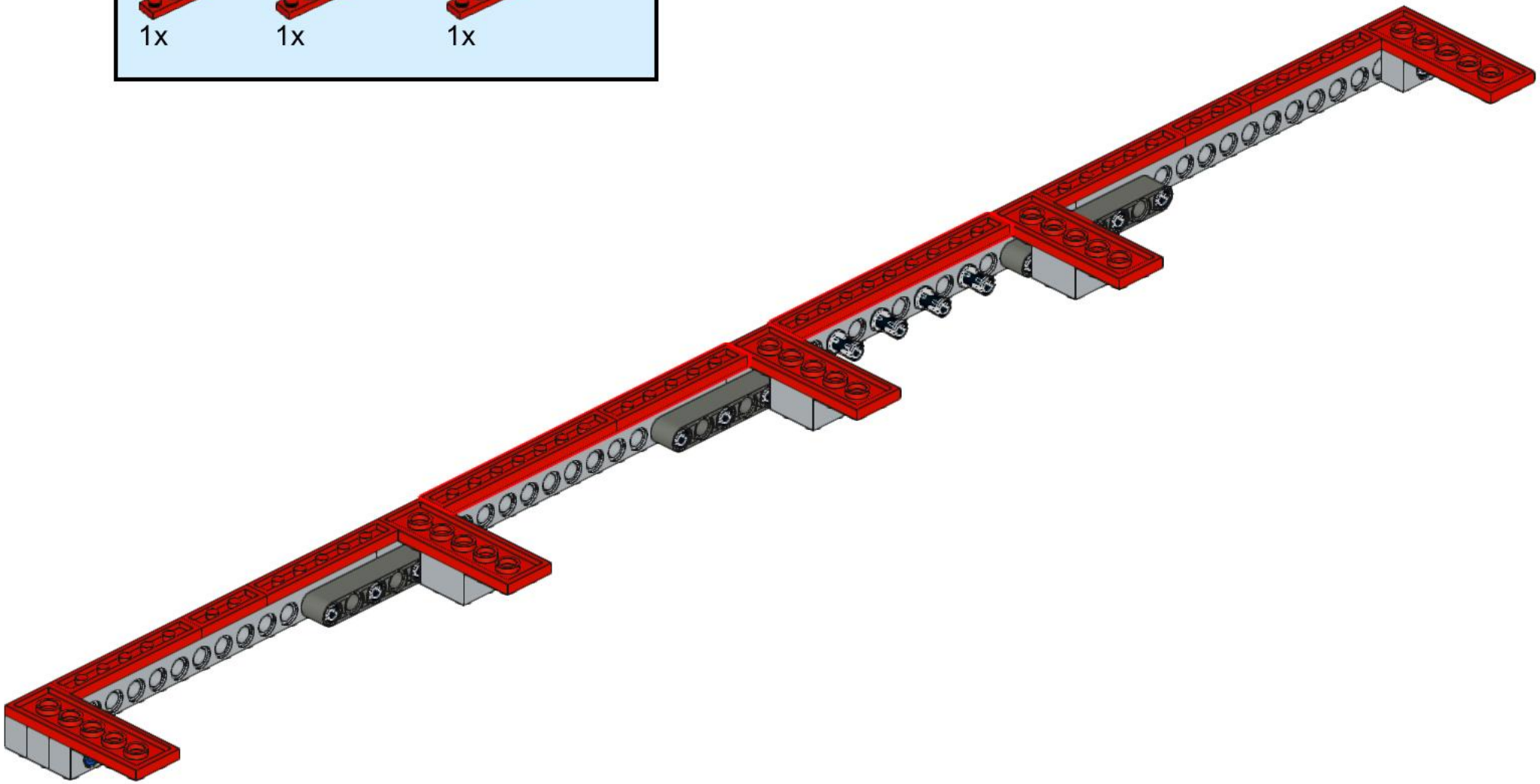

9

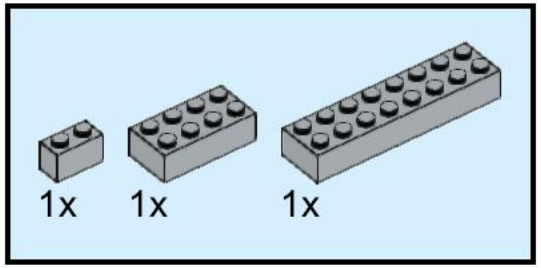

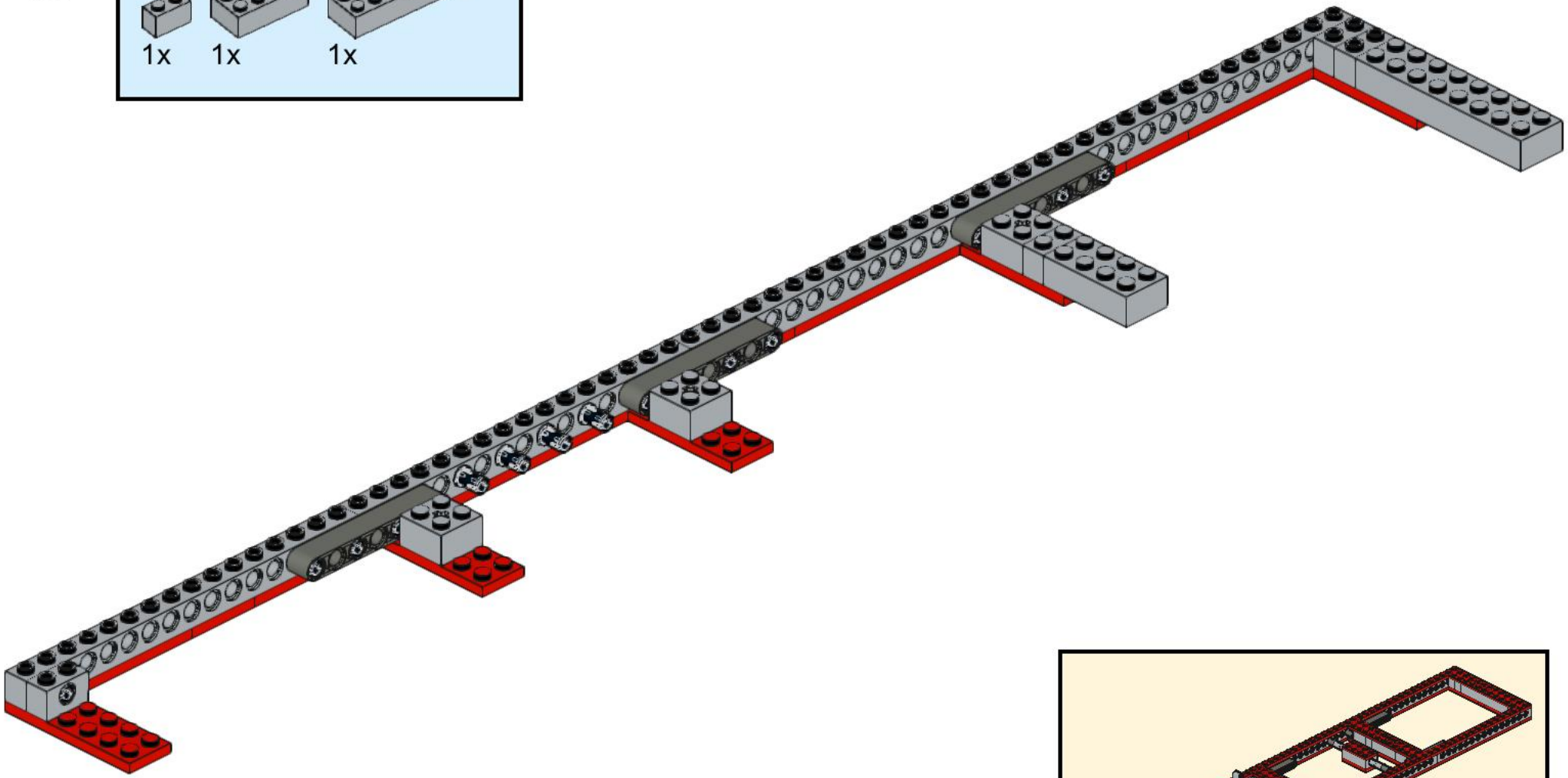

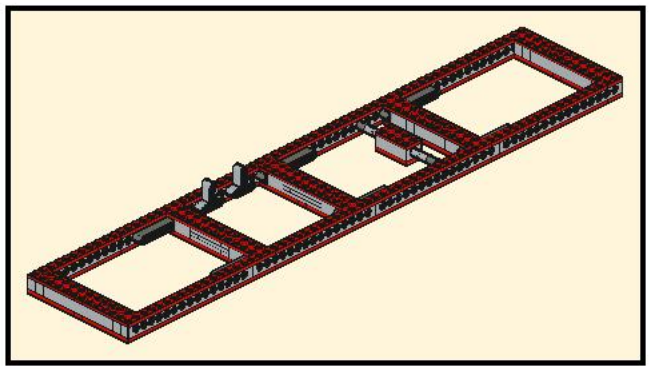

10

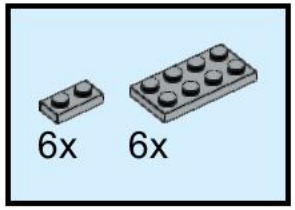

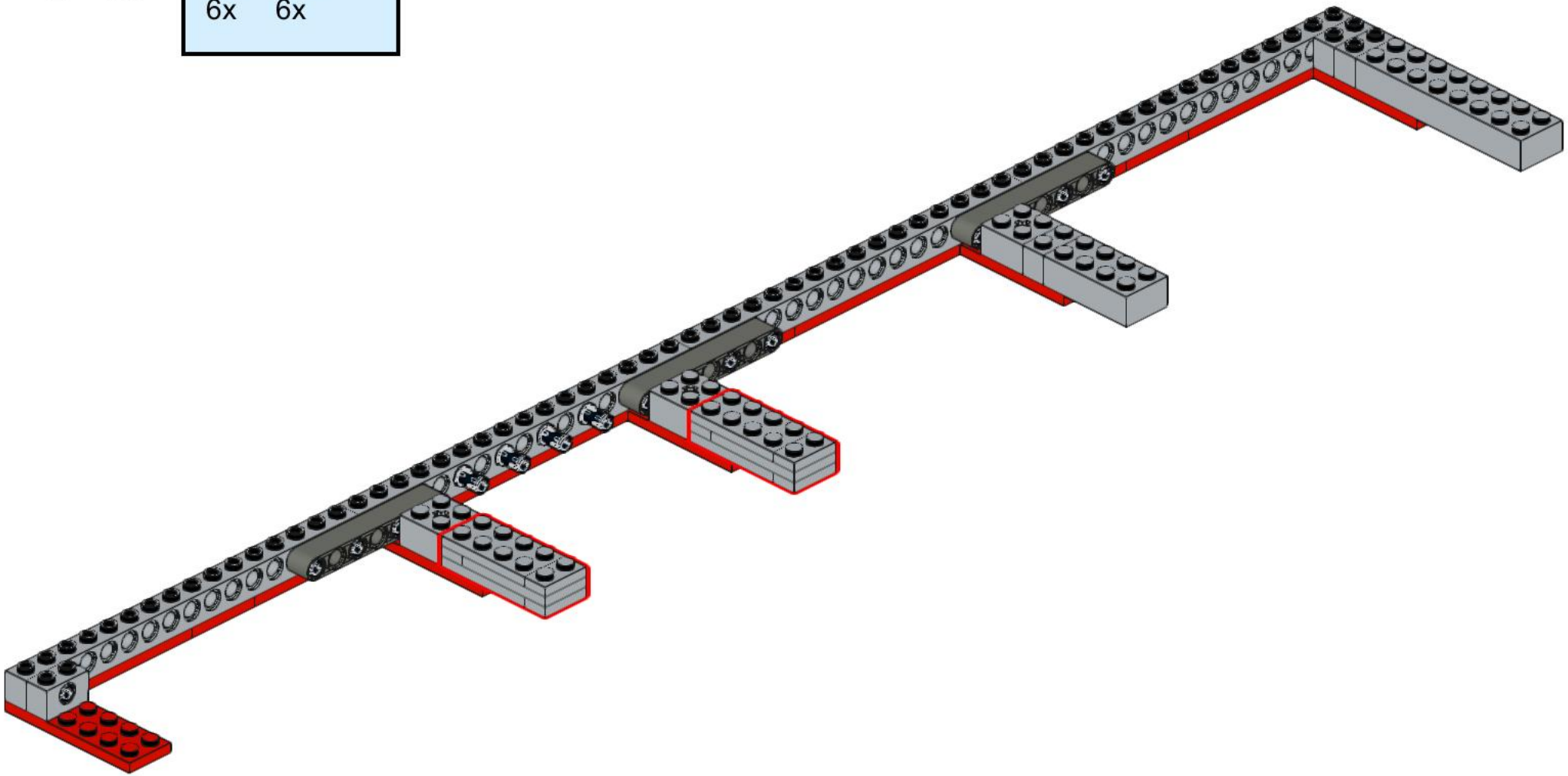

11

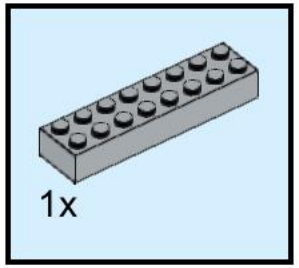

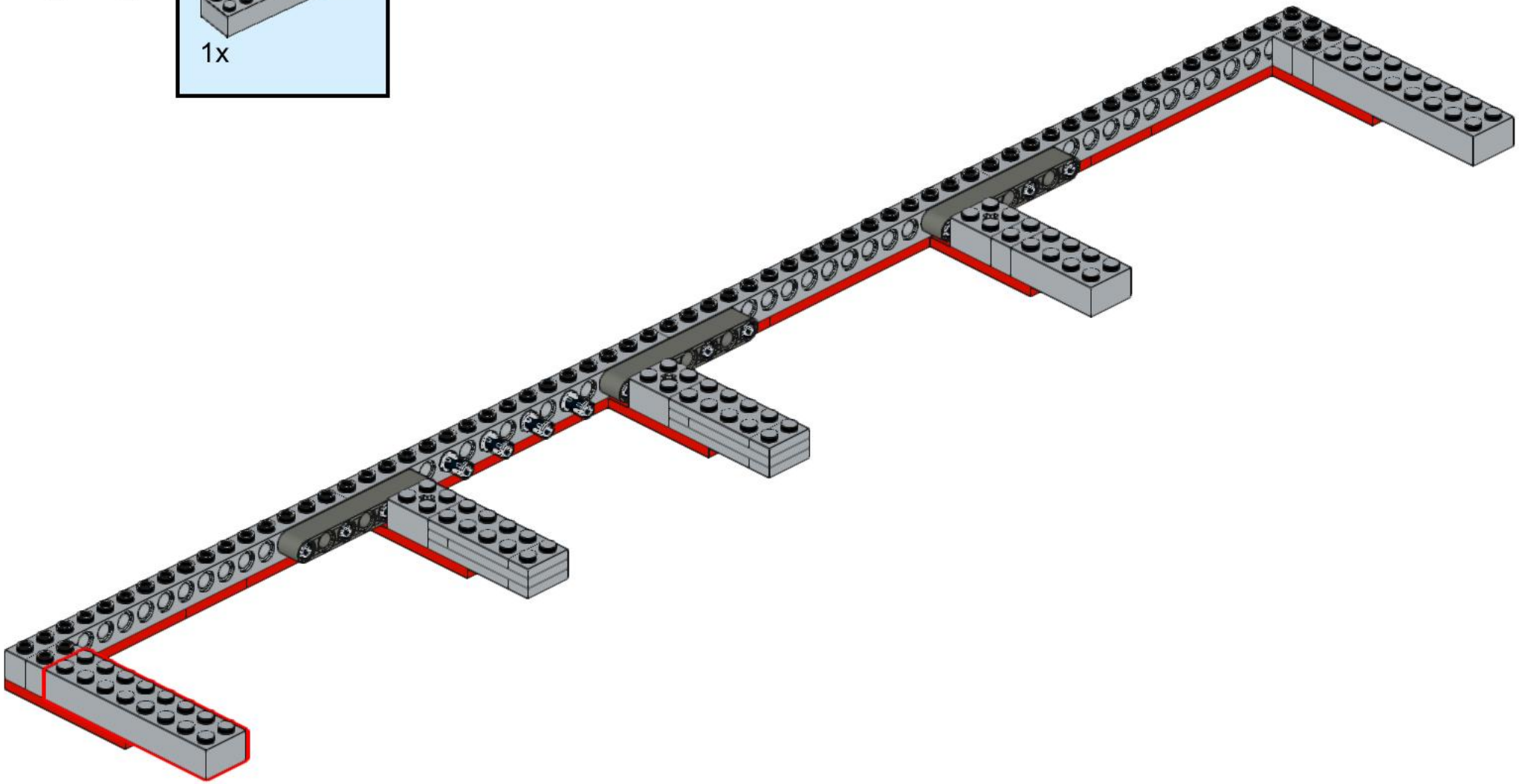

12

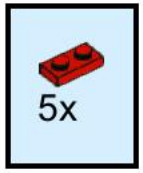

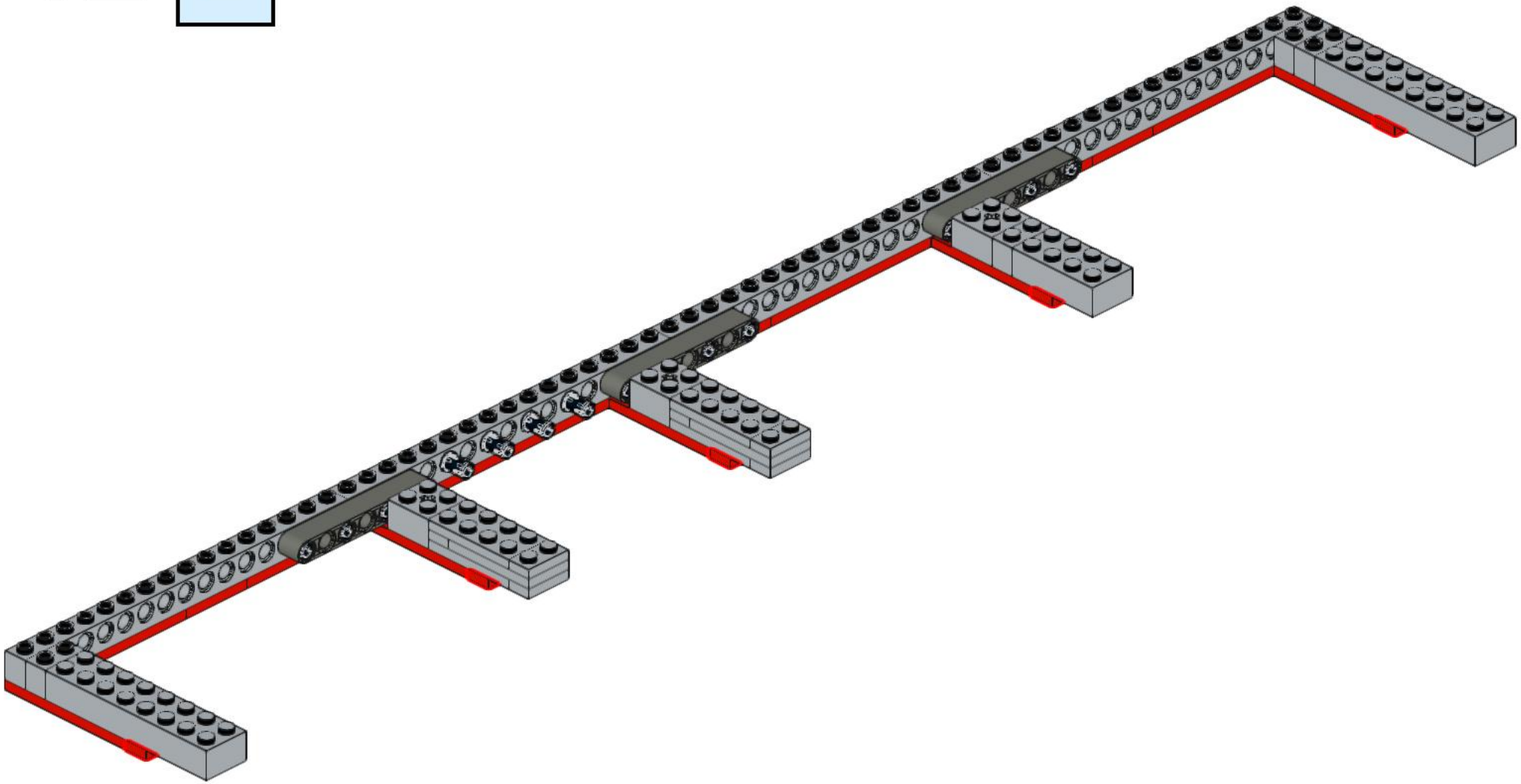

13

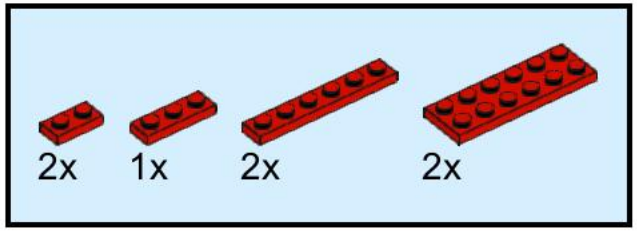

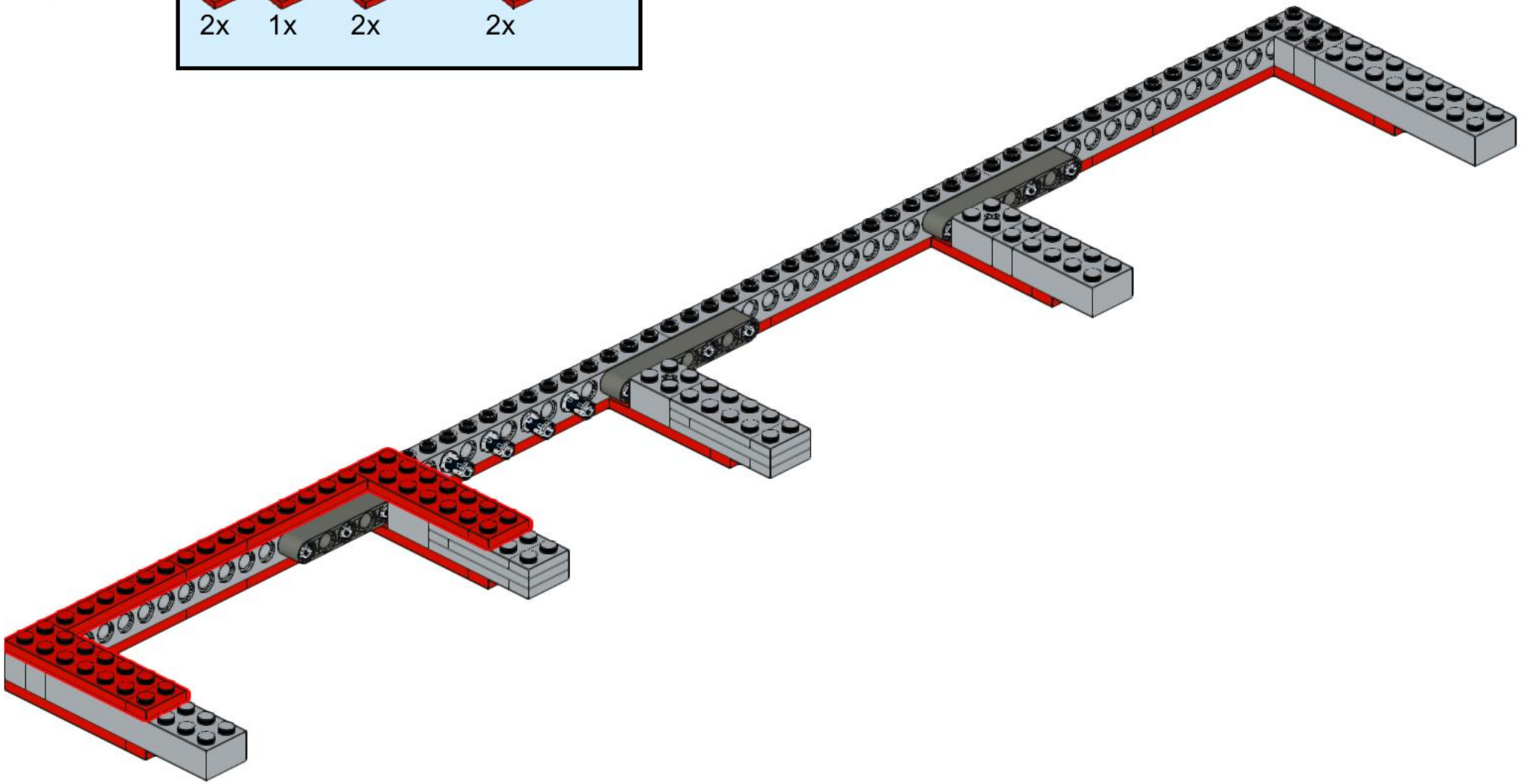

14

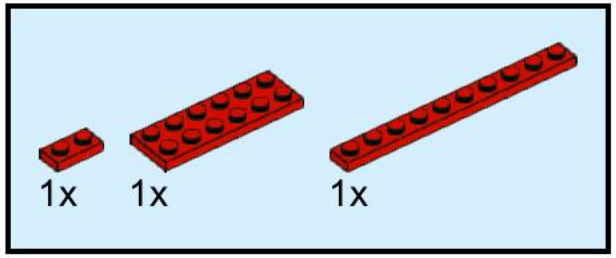

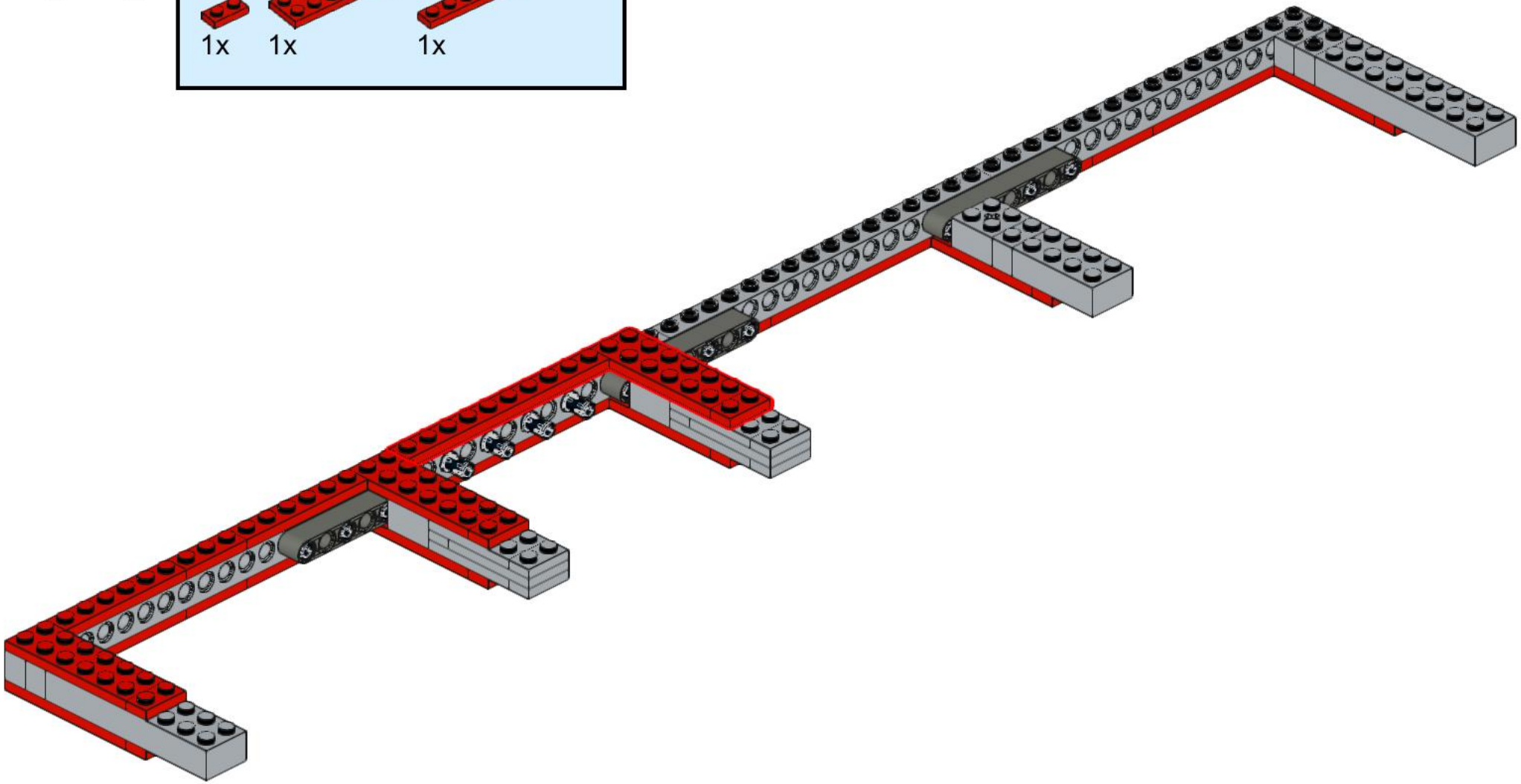

15

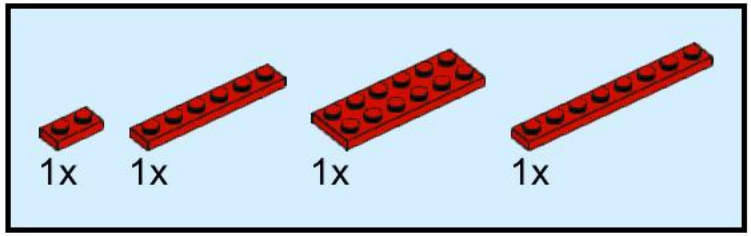

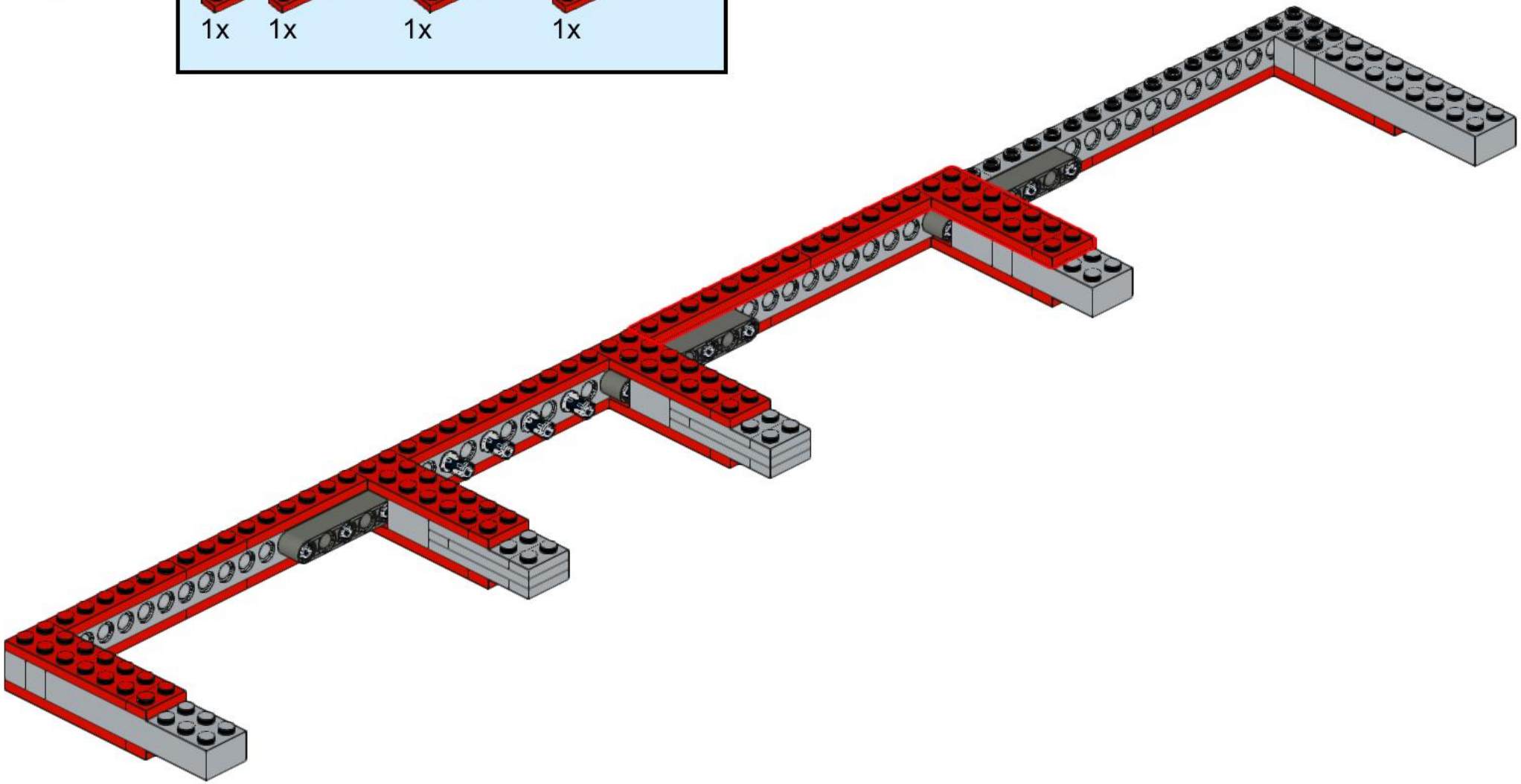

16

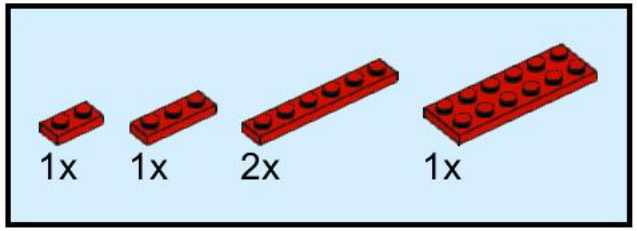

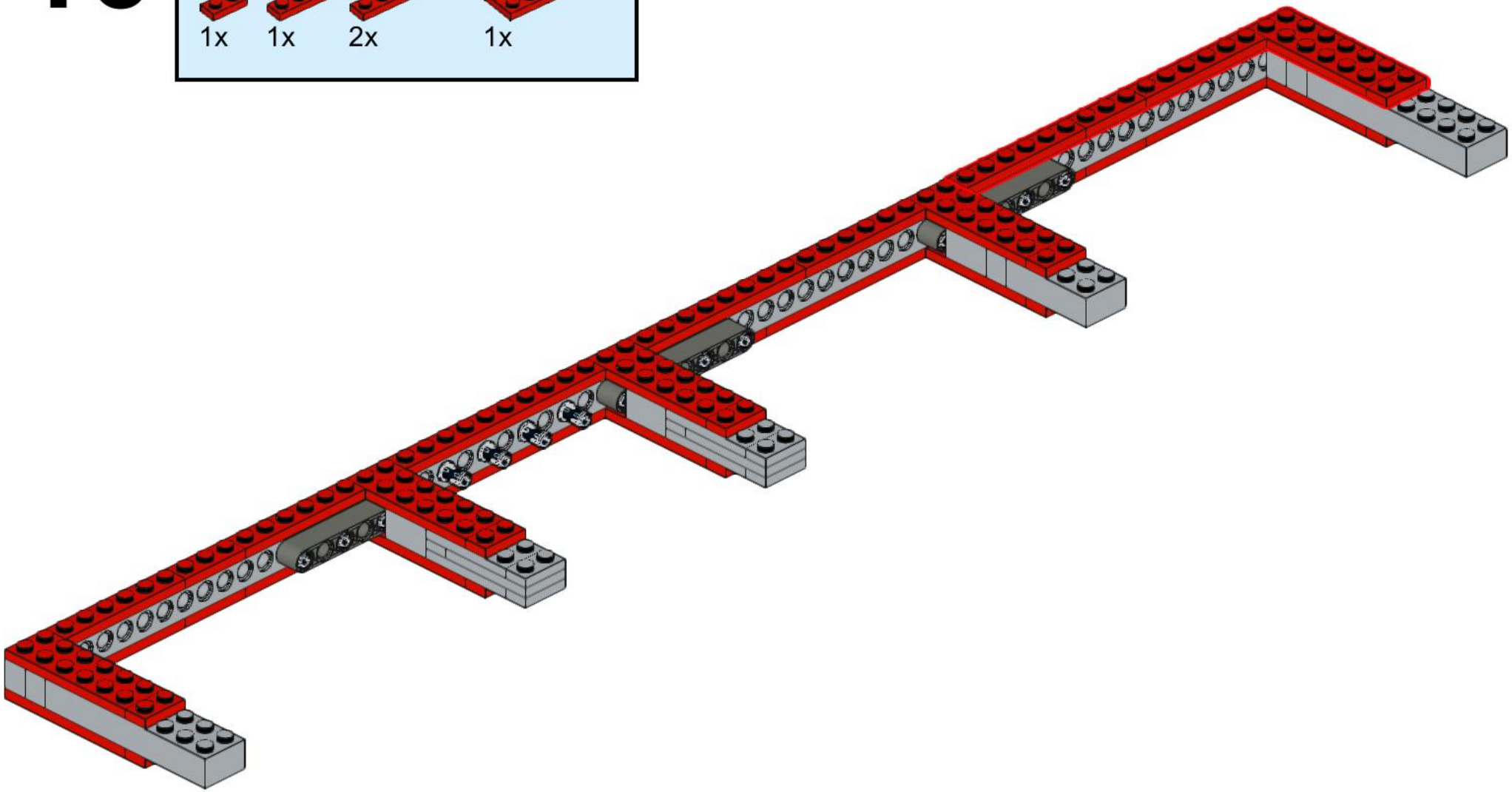

17

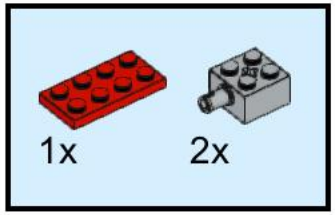

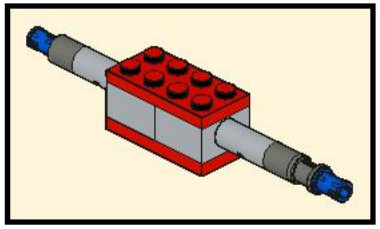

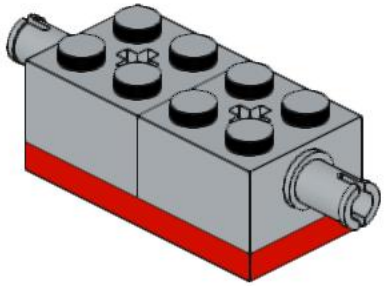

18

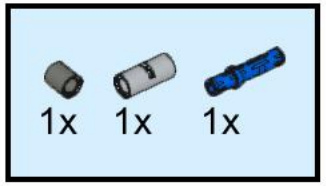

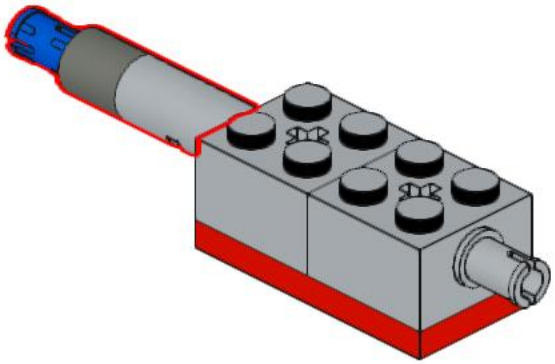

19

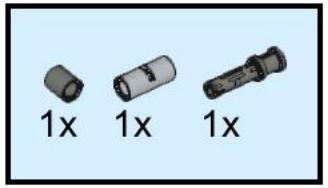

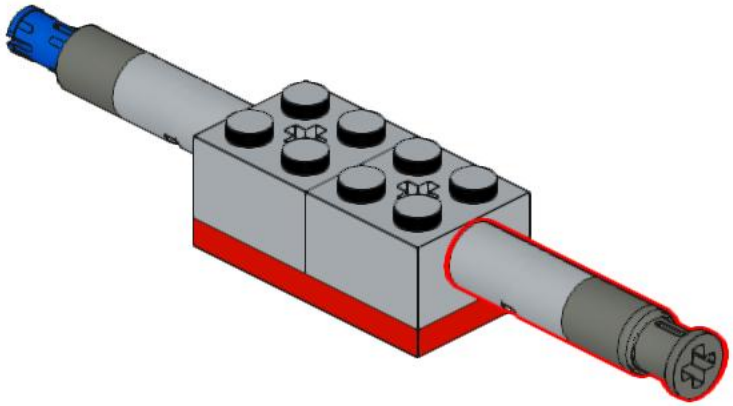

20

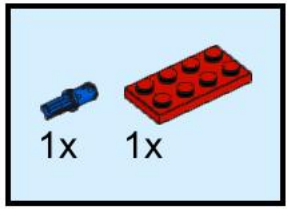

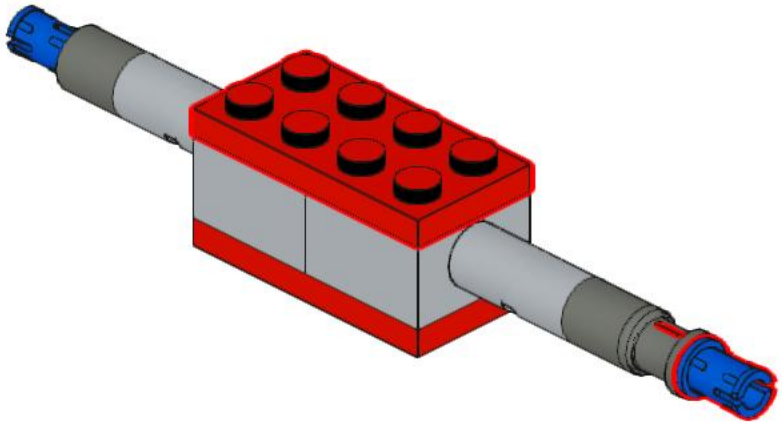

21

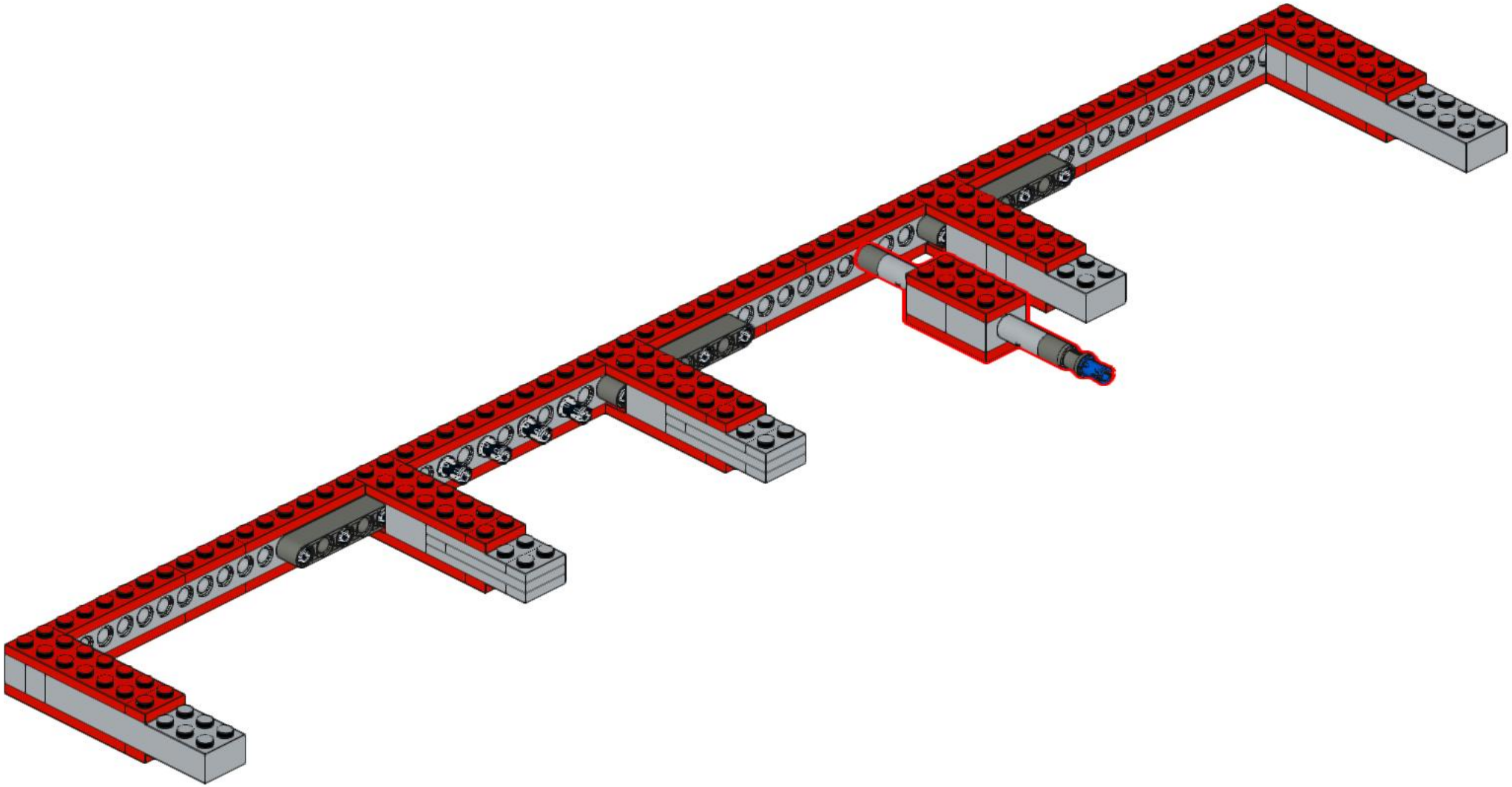

22

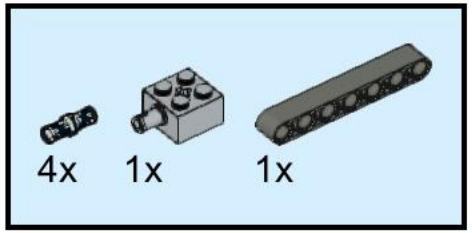

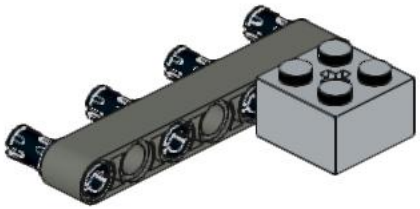

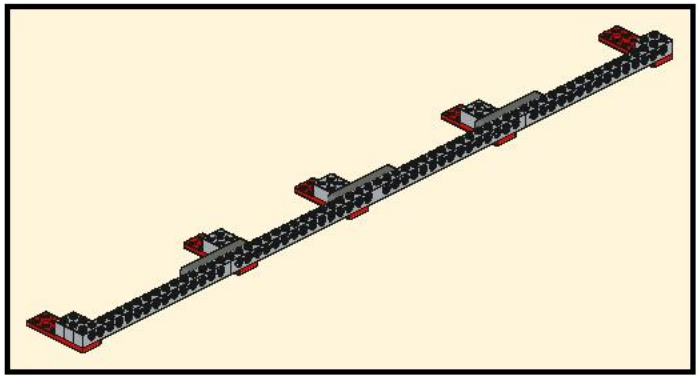

23

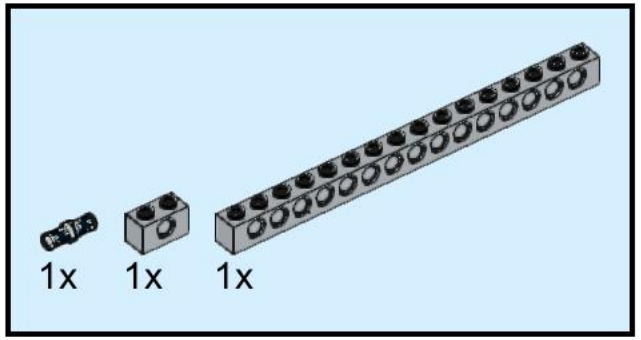

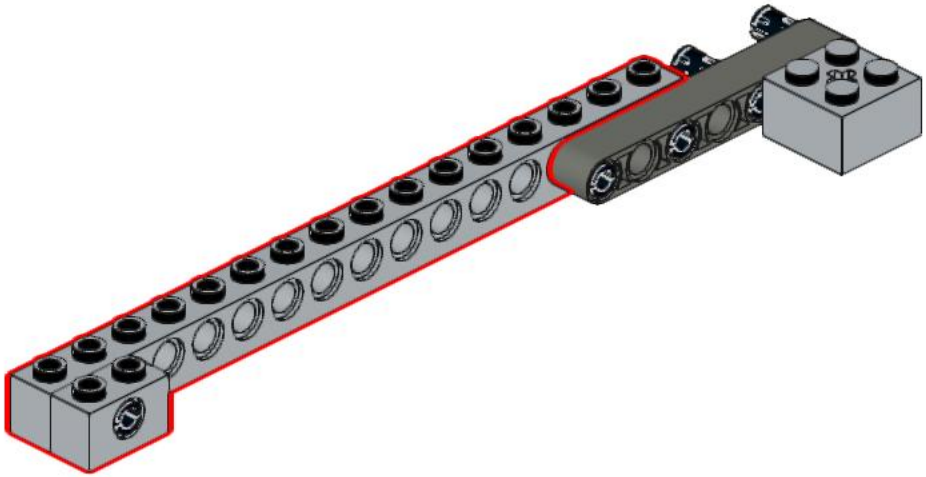

24

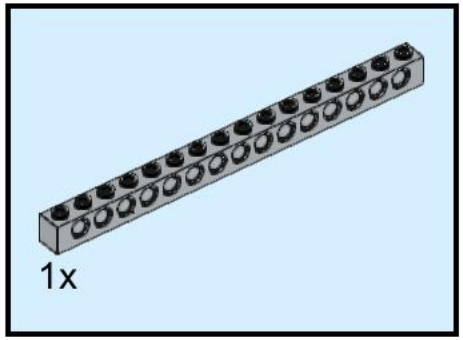

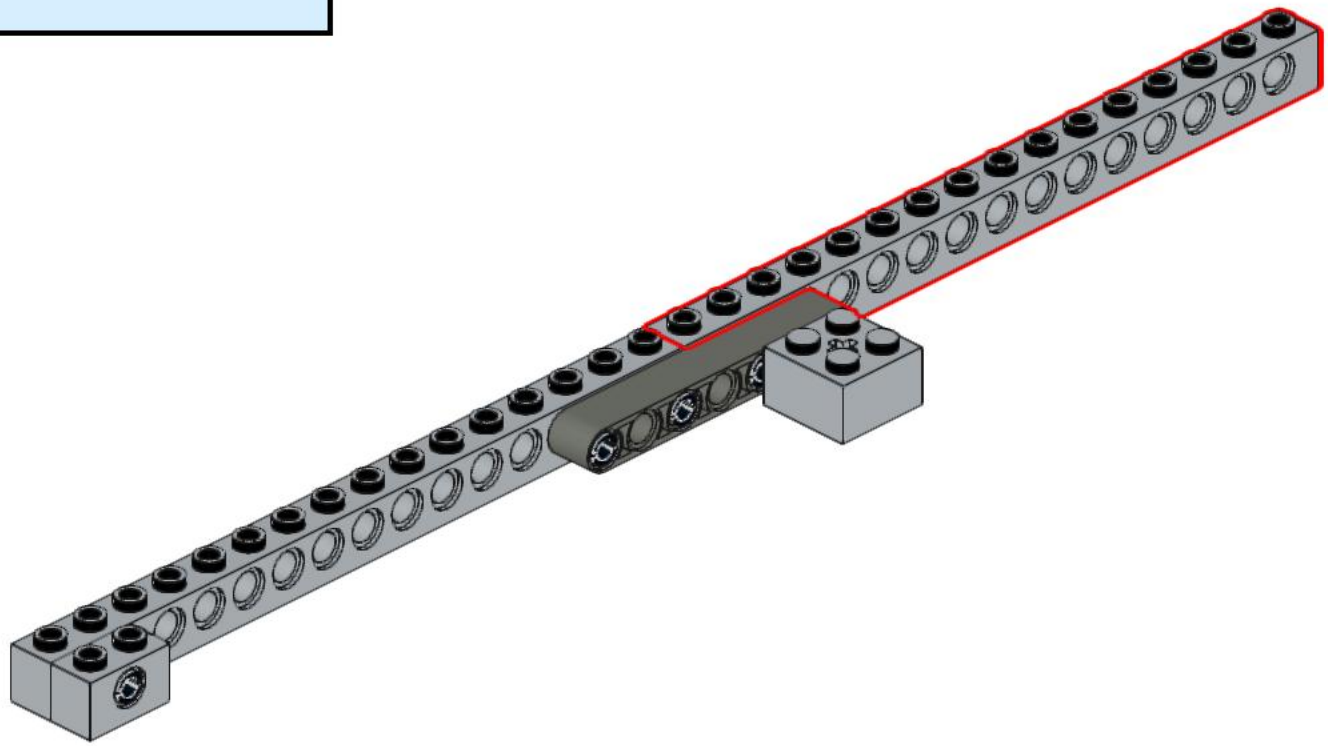

25

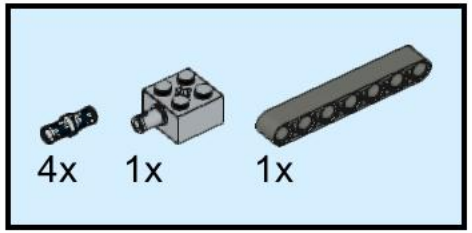

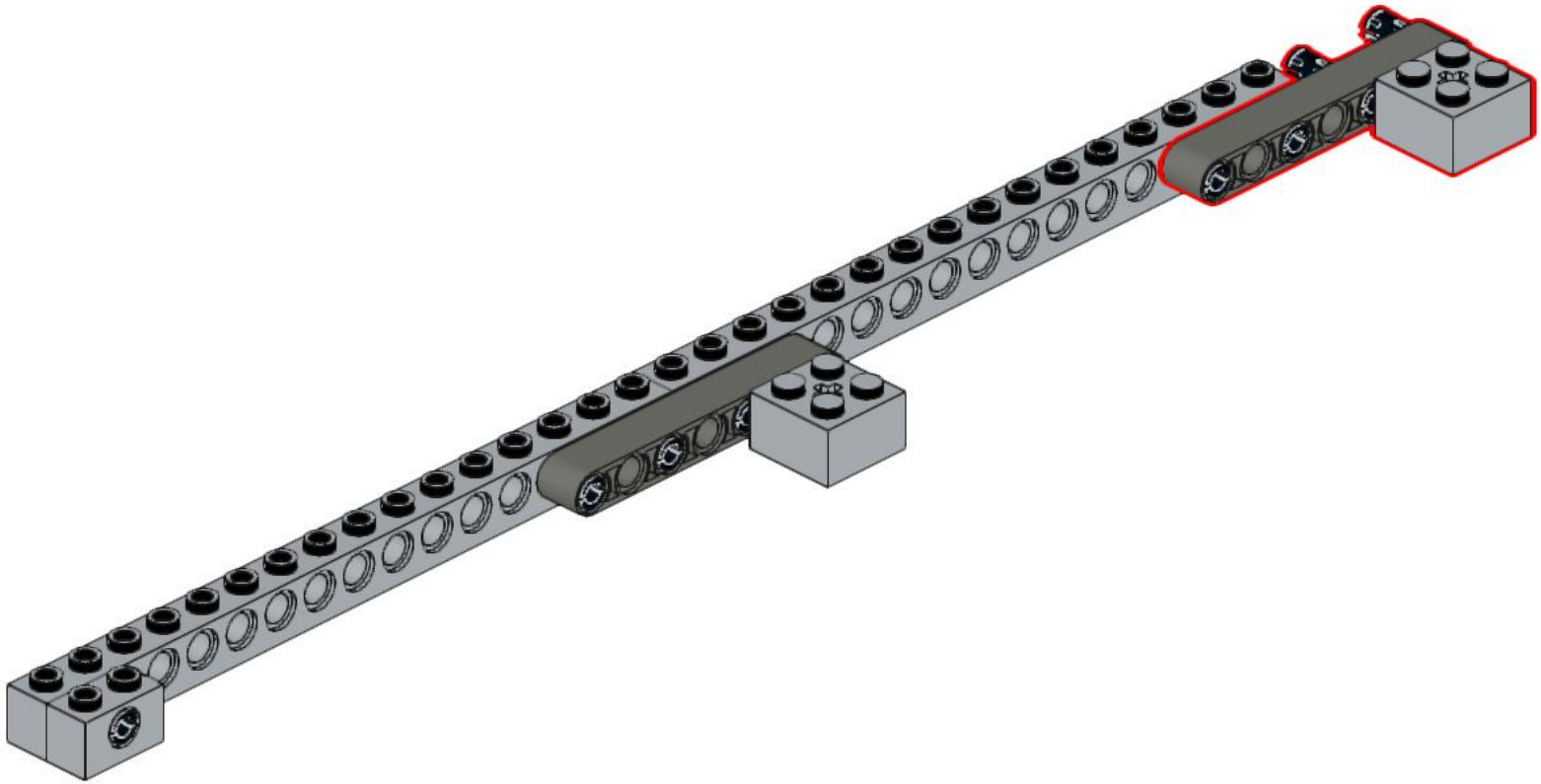

26

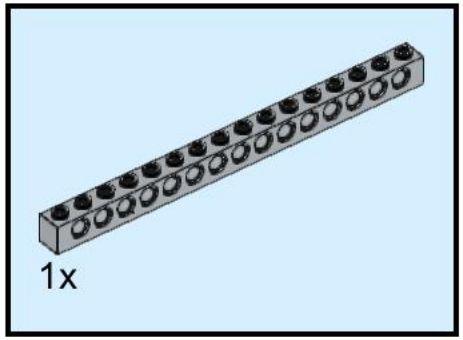

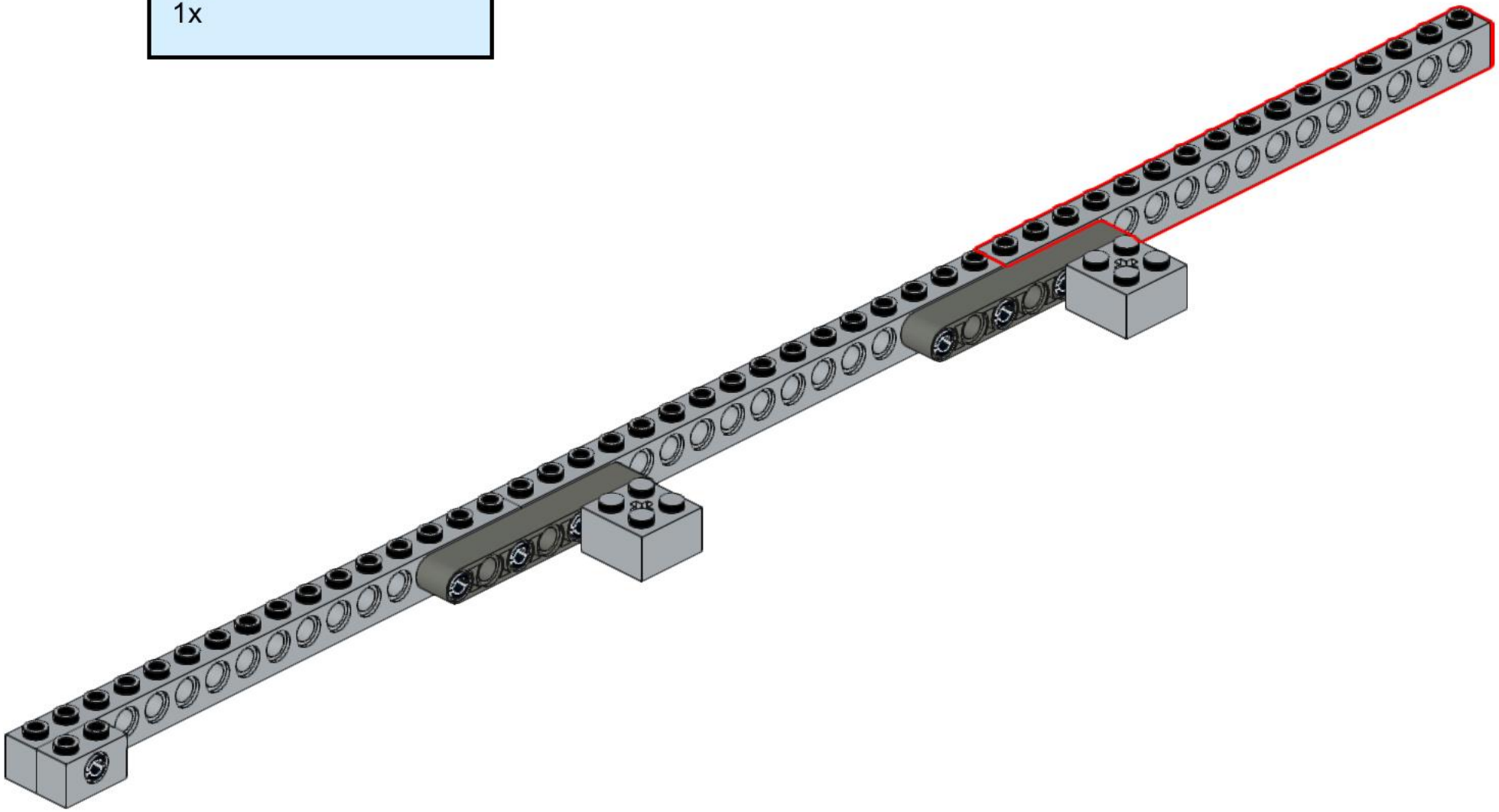

27

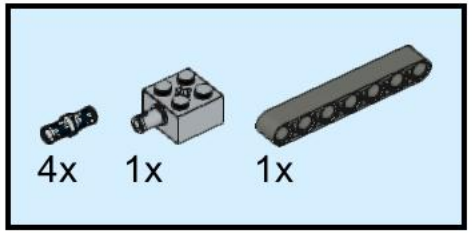

28

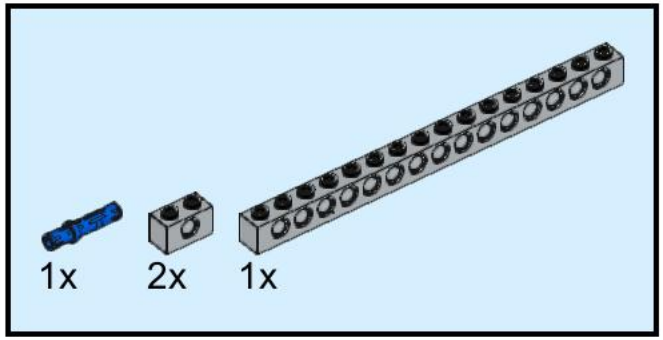

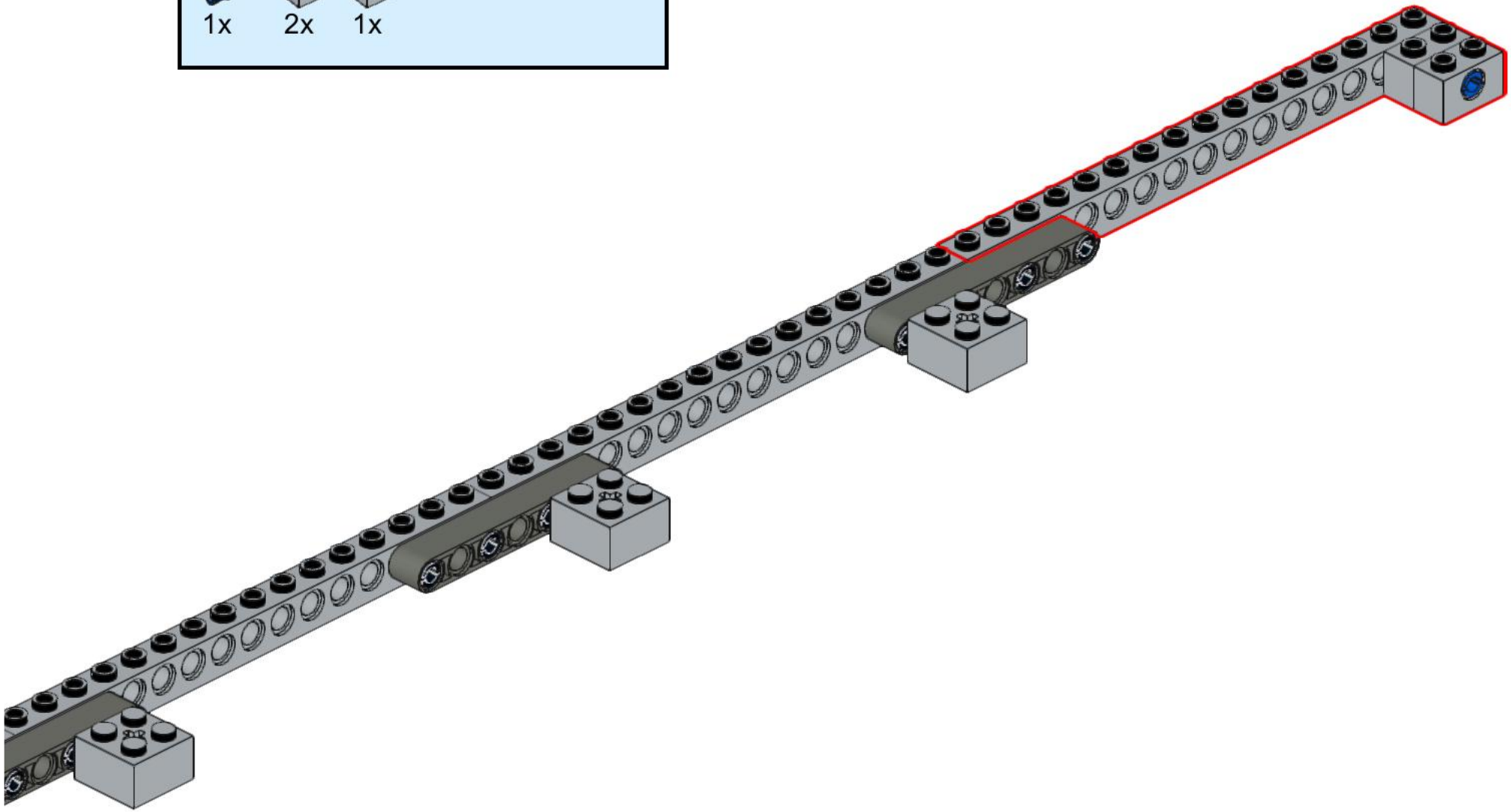

29

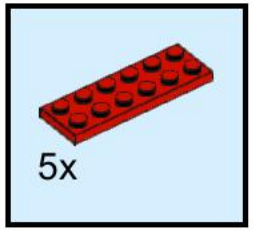

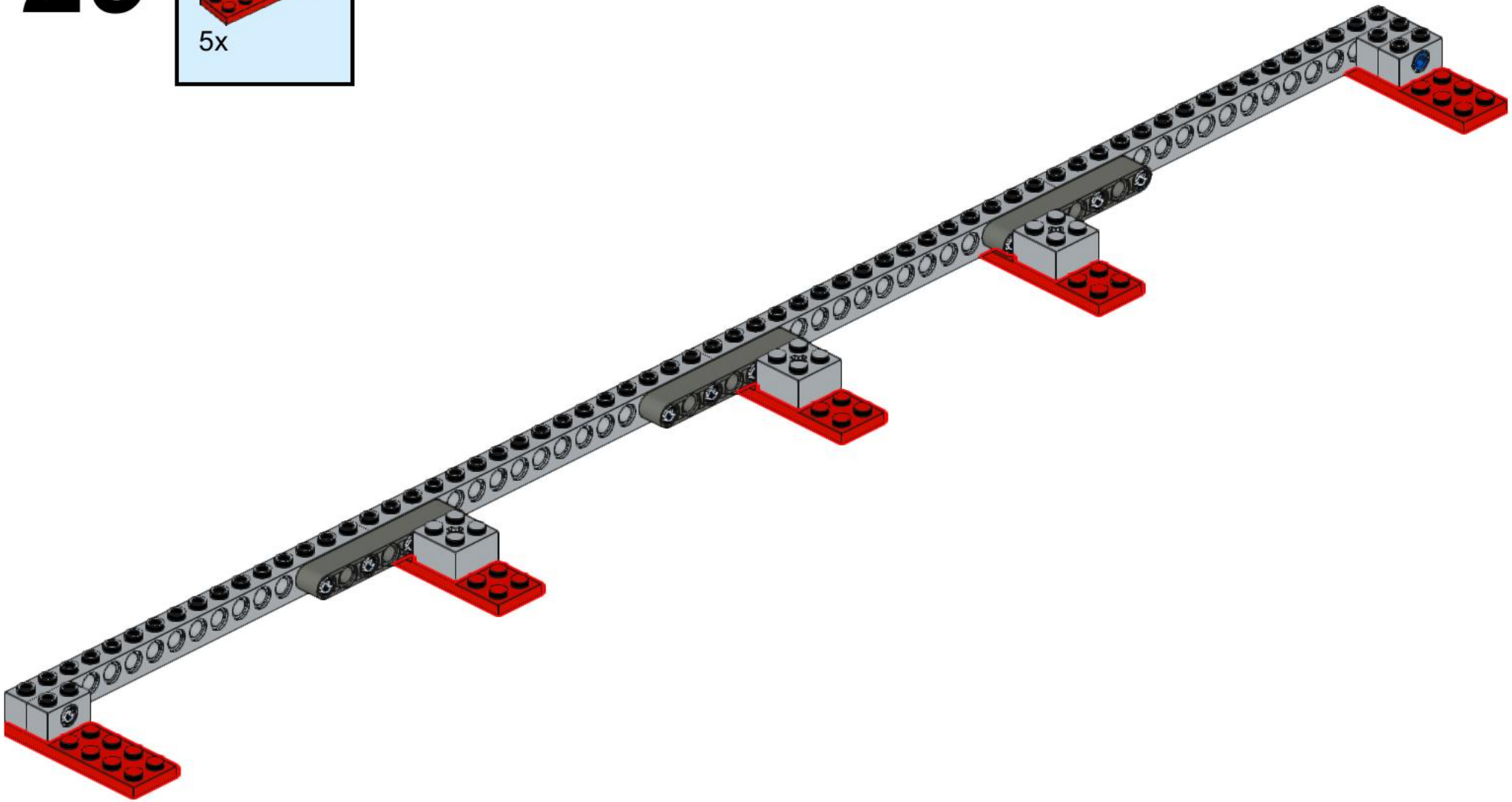

30

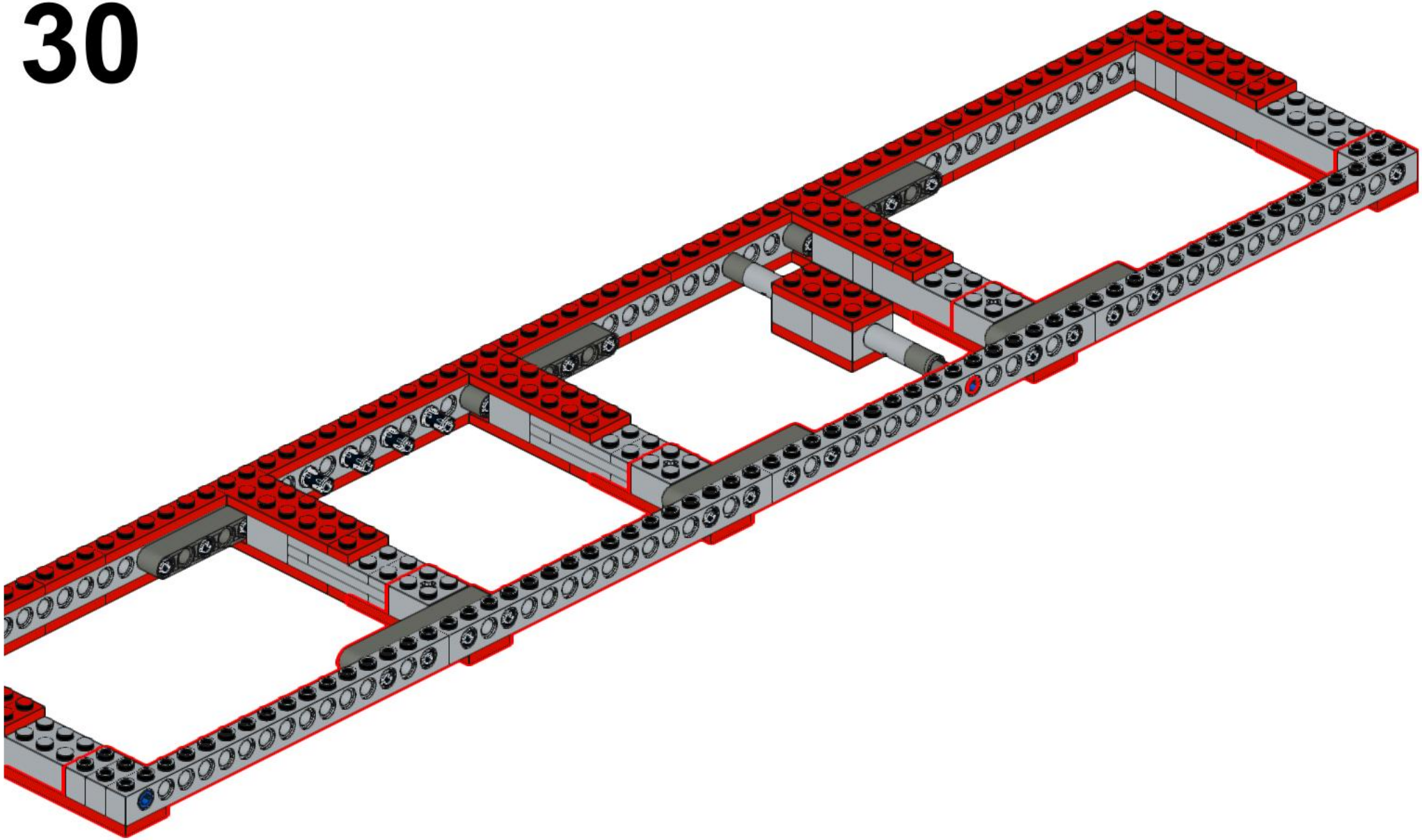

31

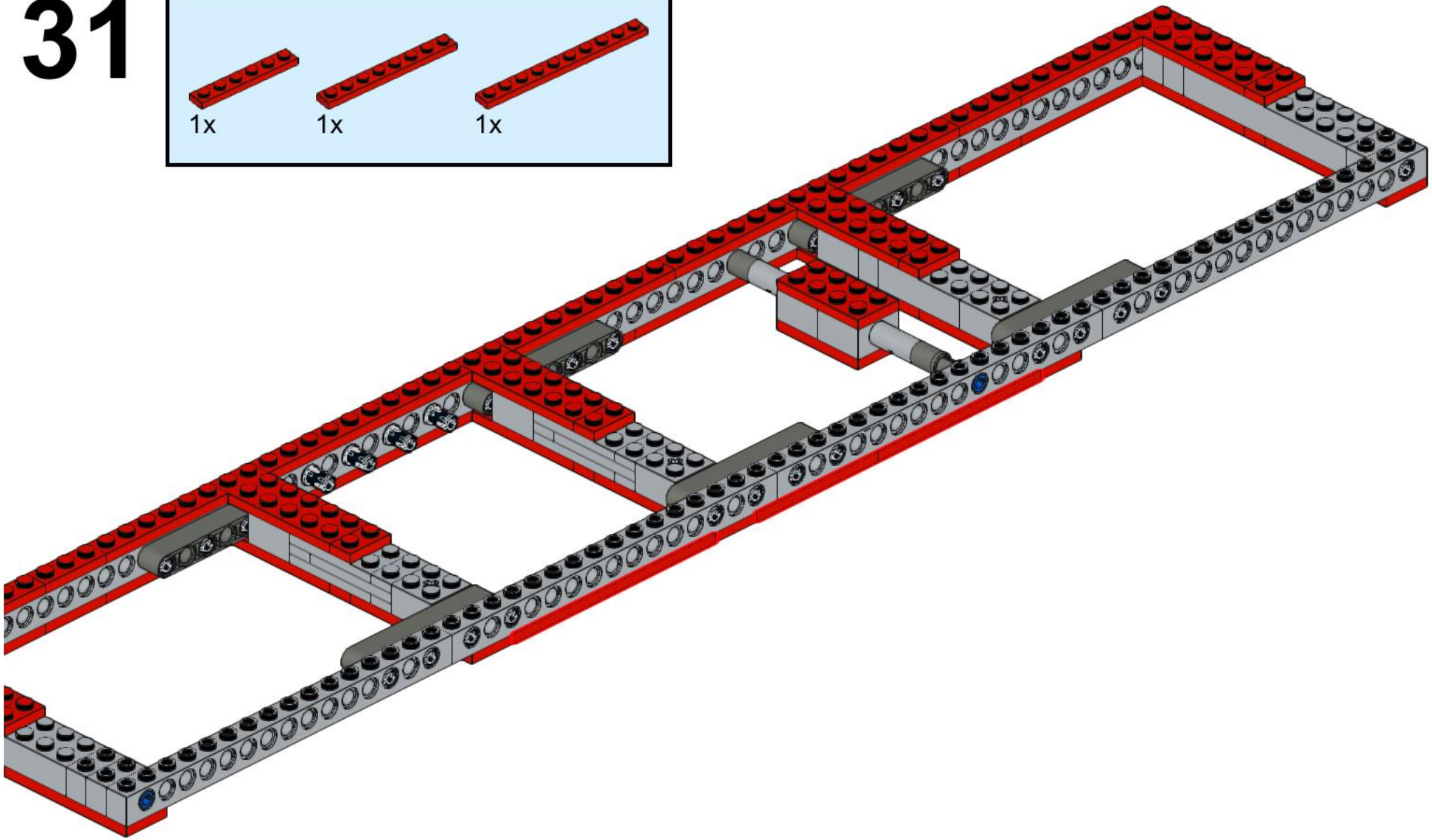

32

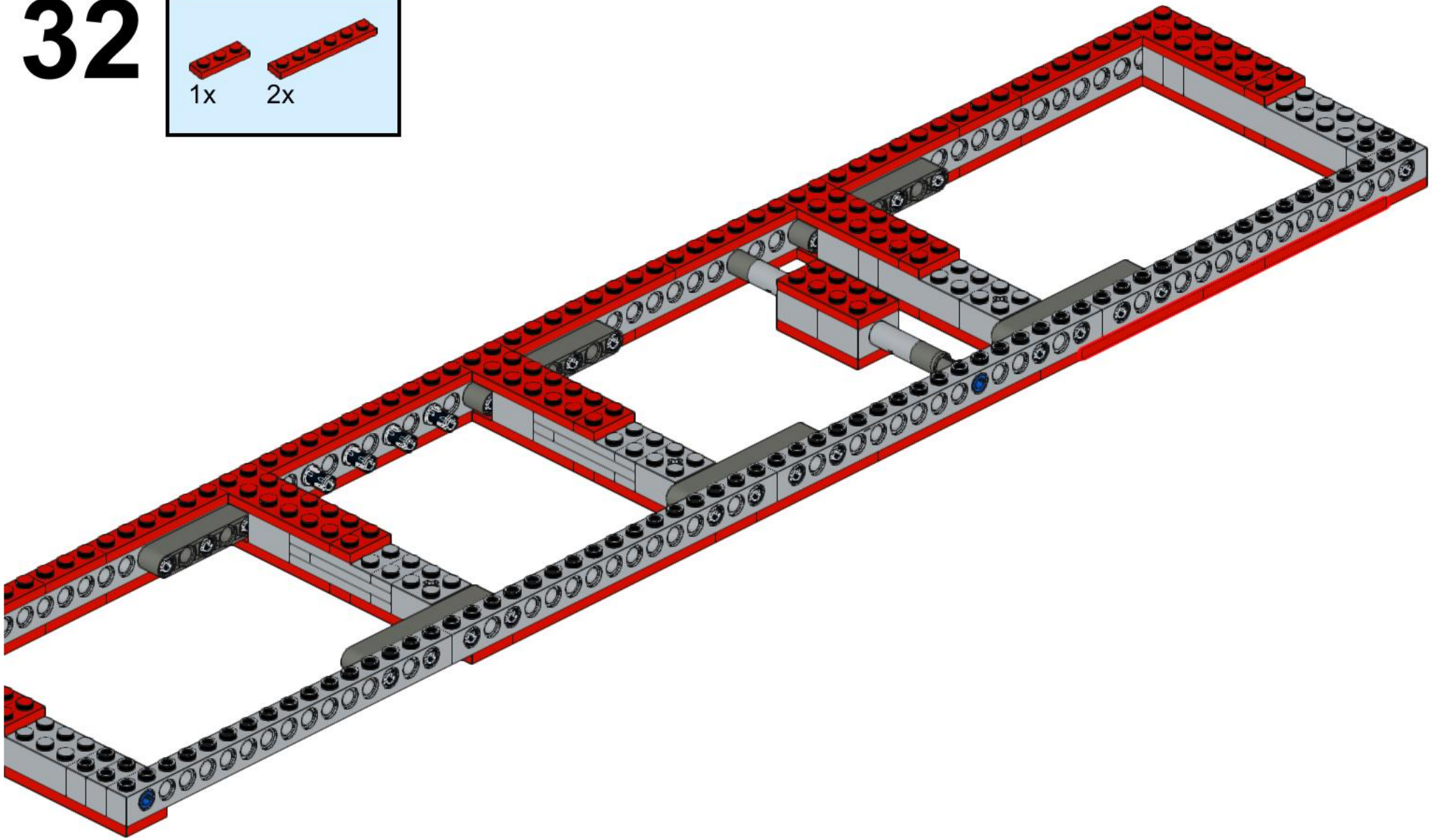

33

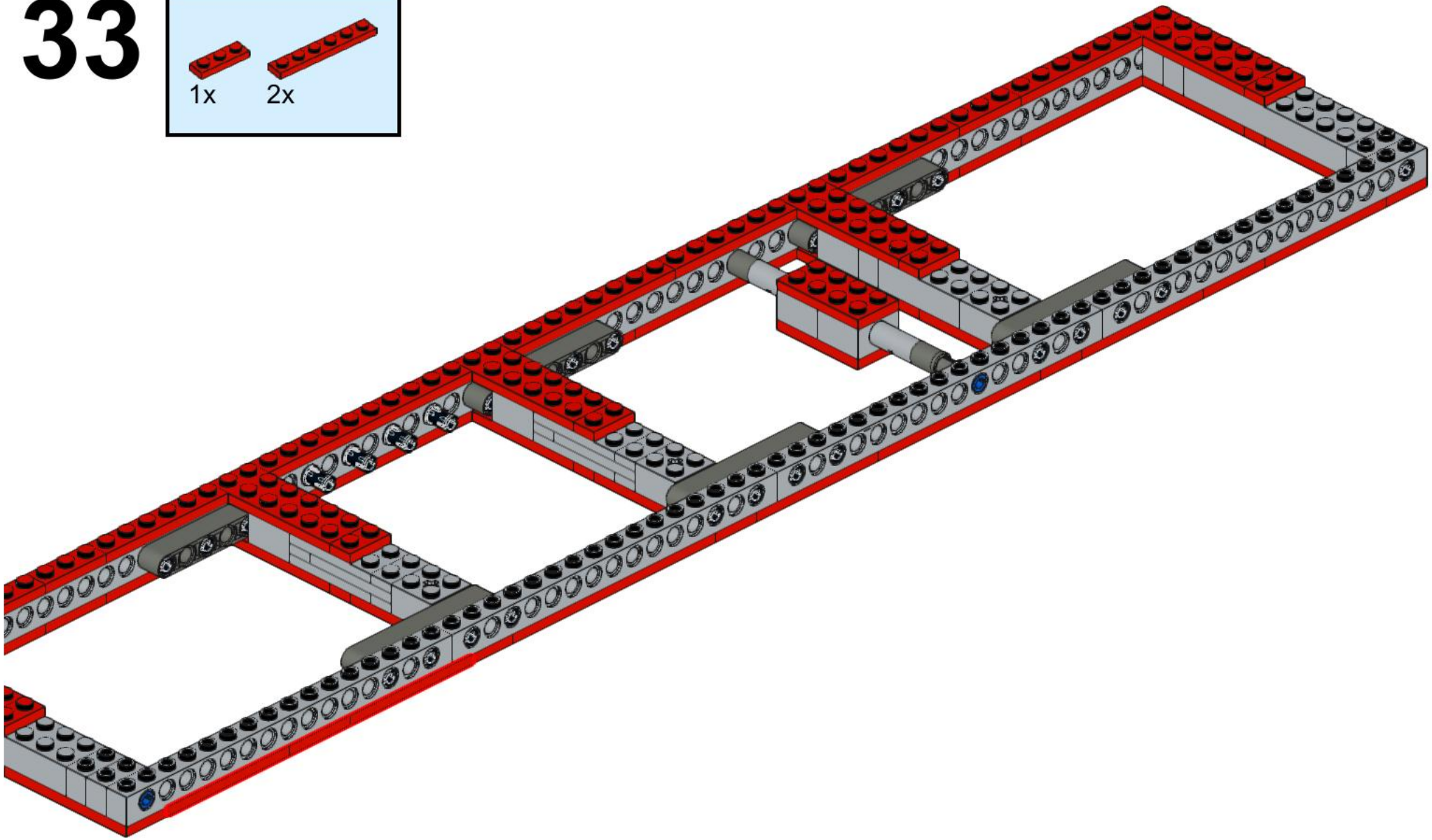

34

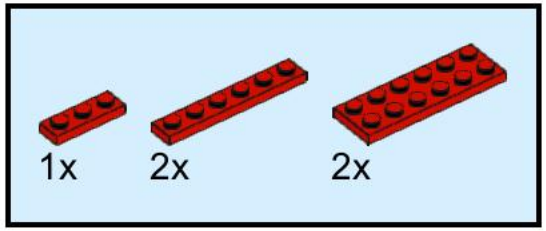

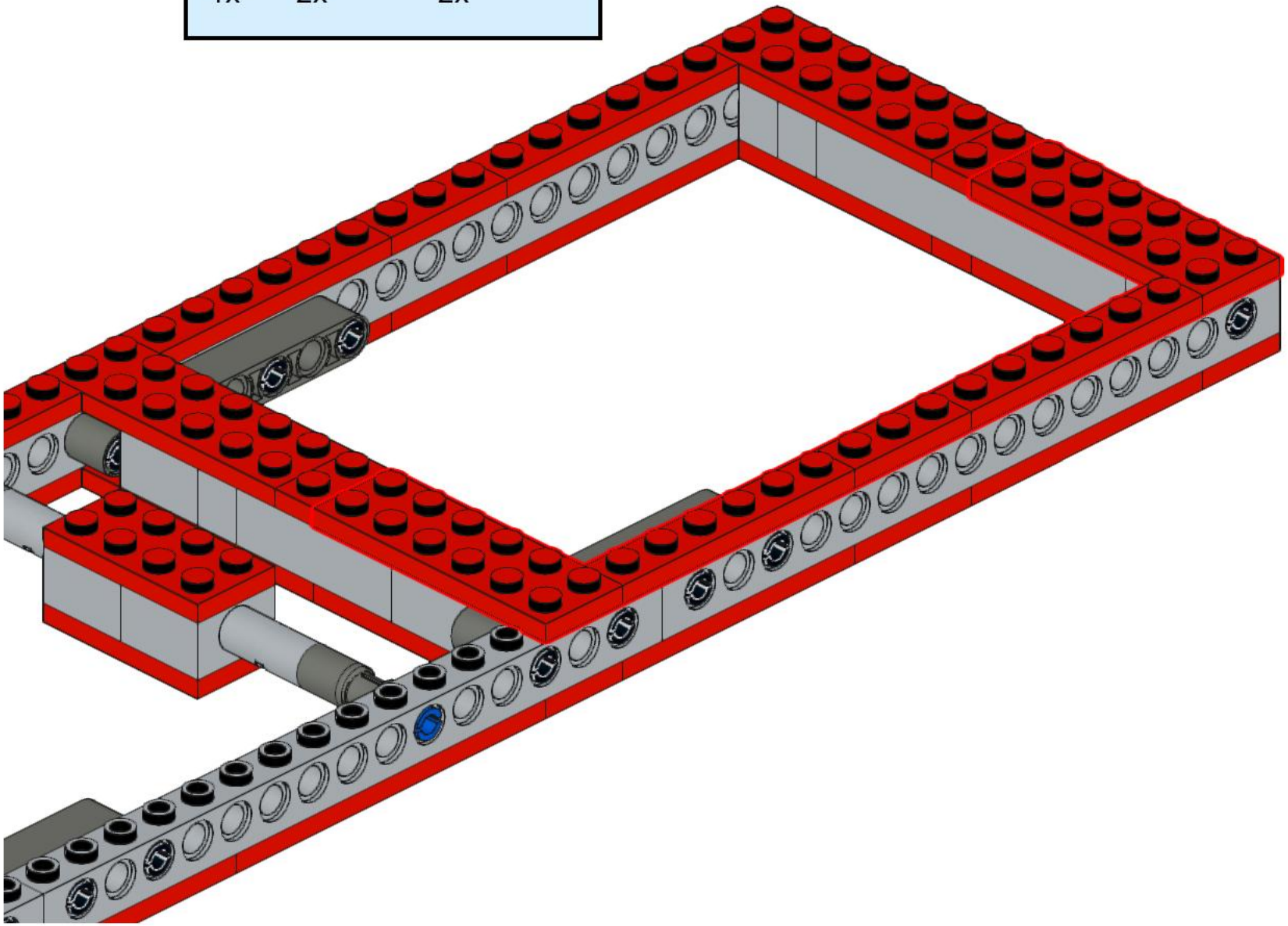

35

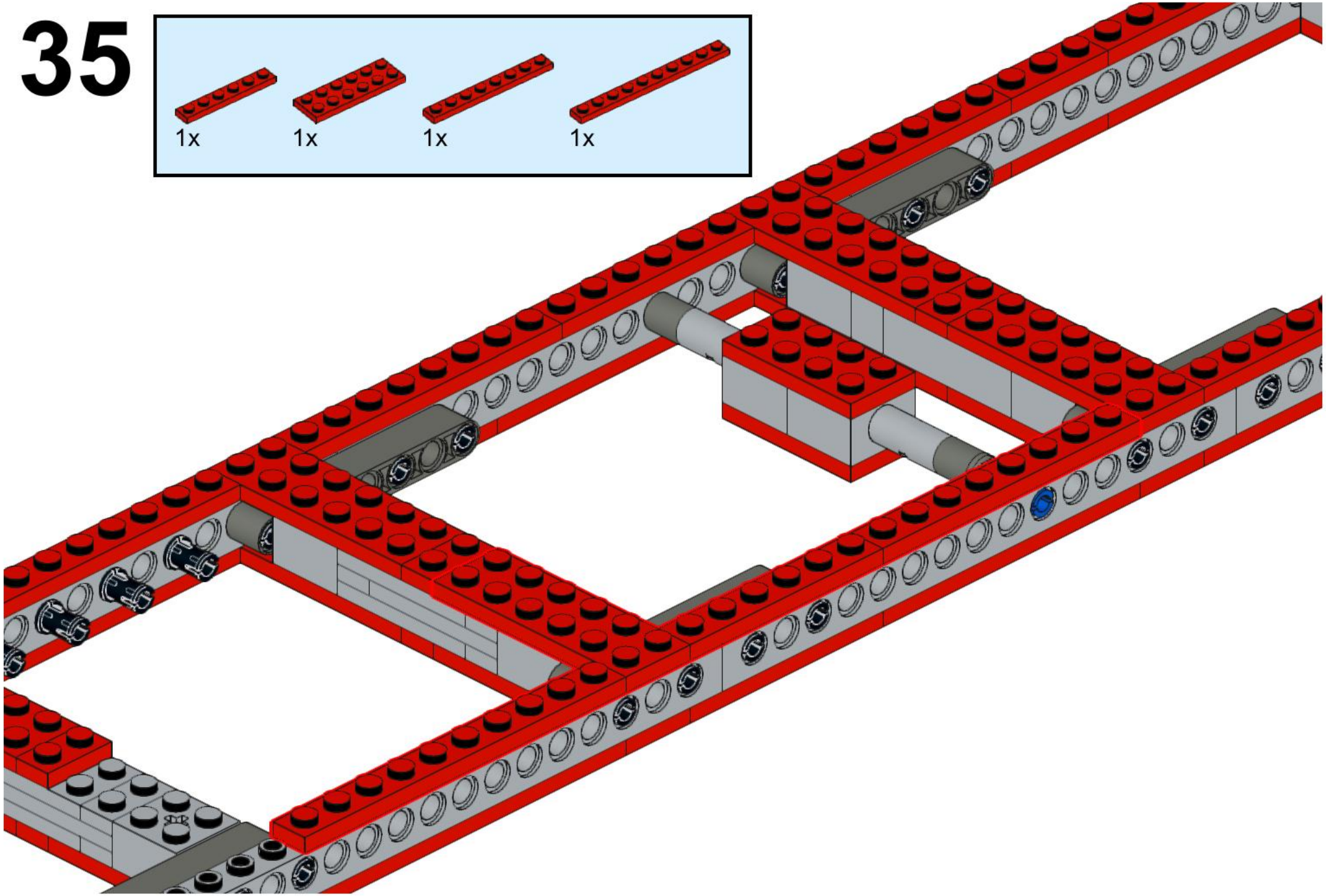

36

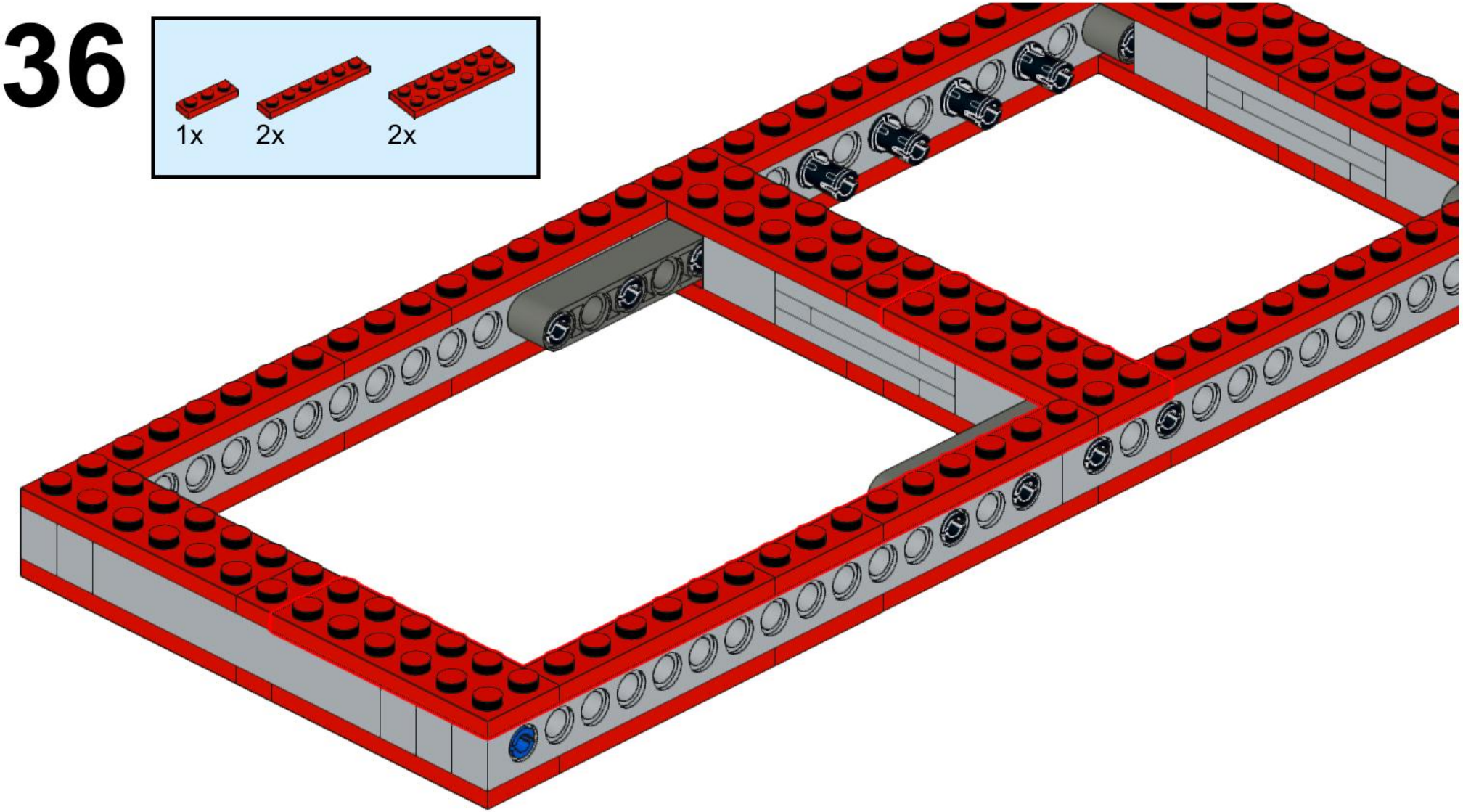

37

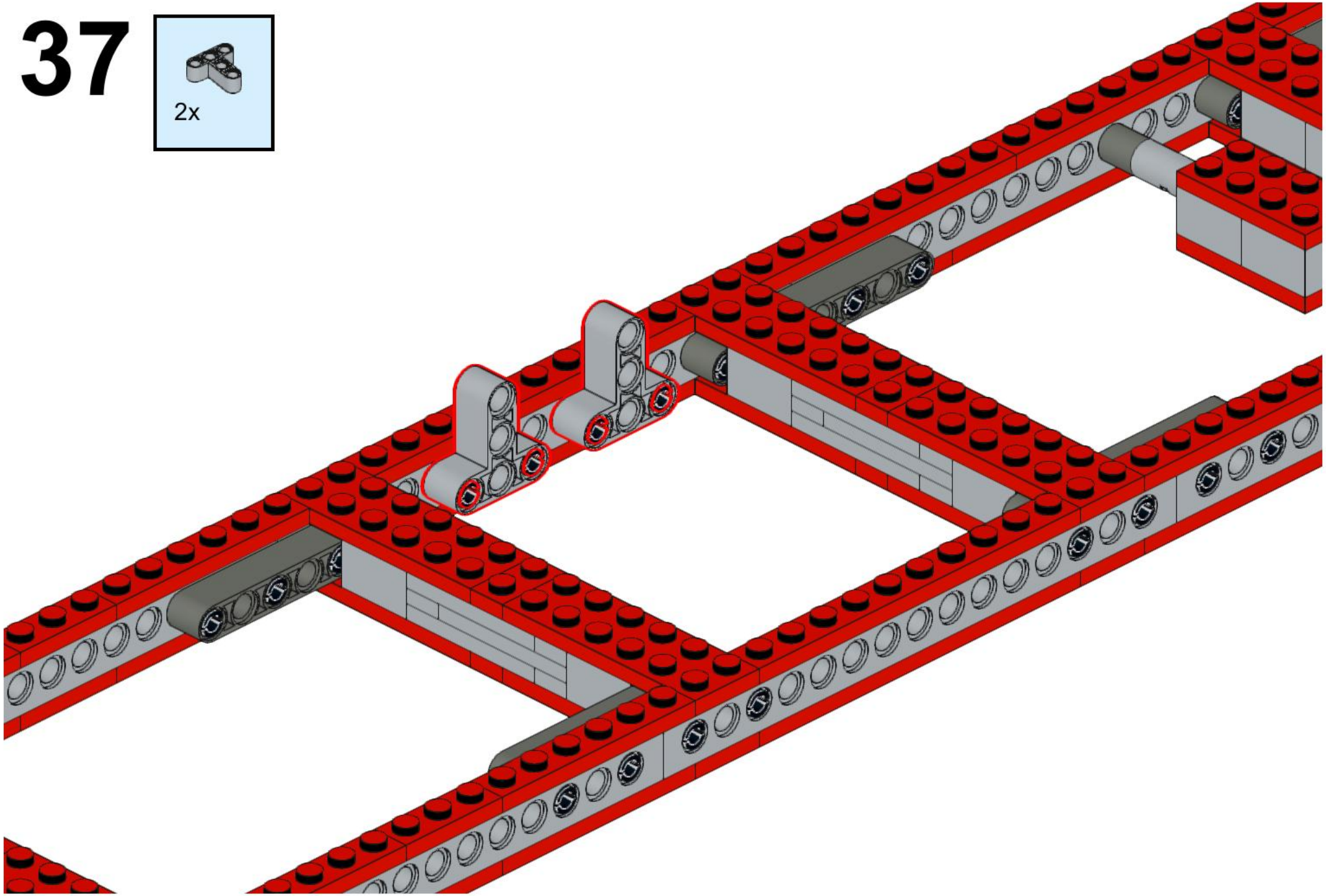

38

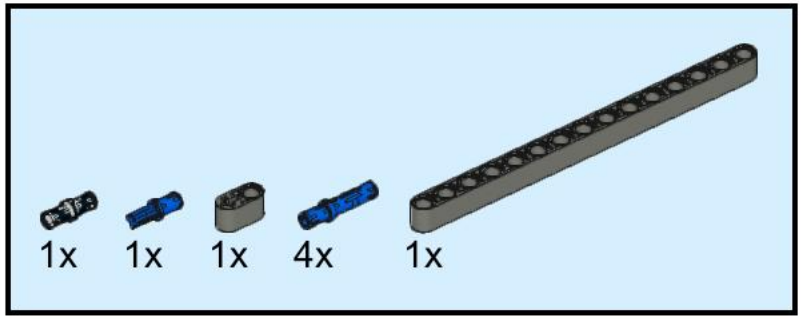

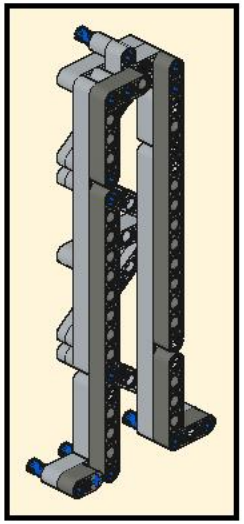

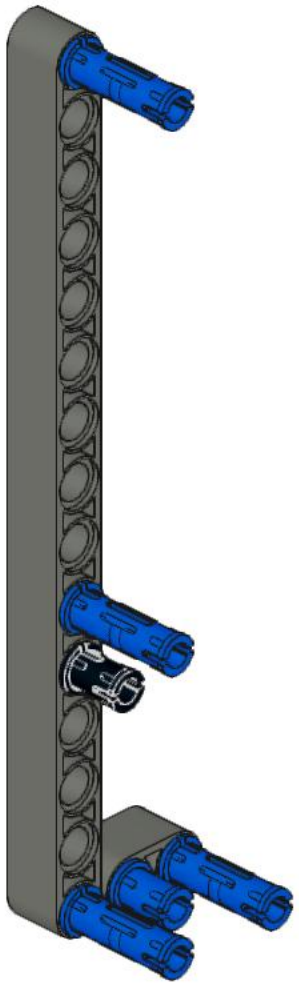

39

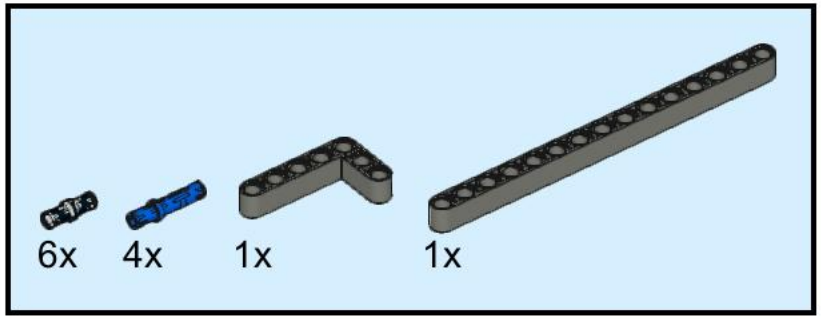

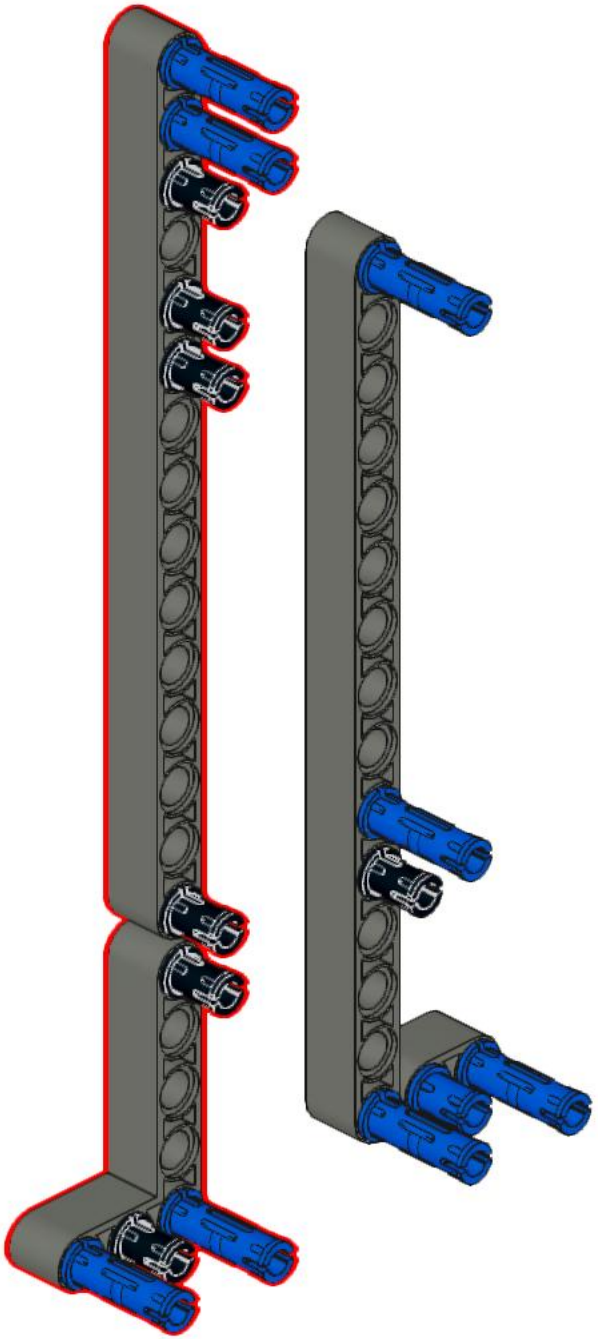

40

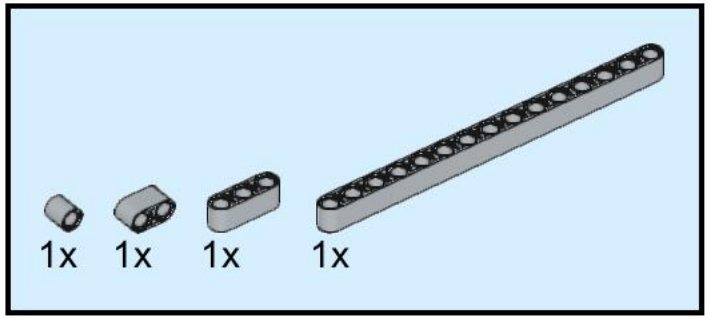

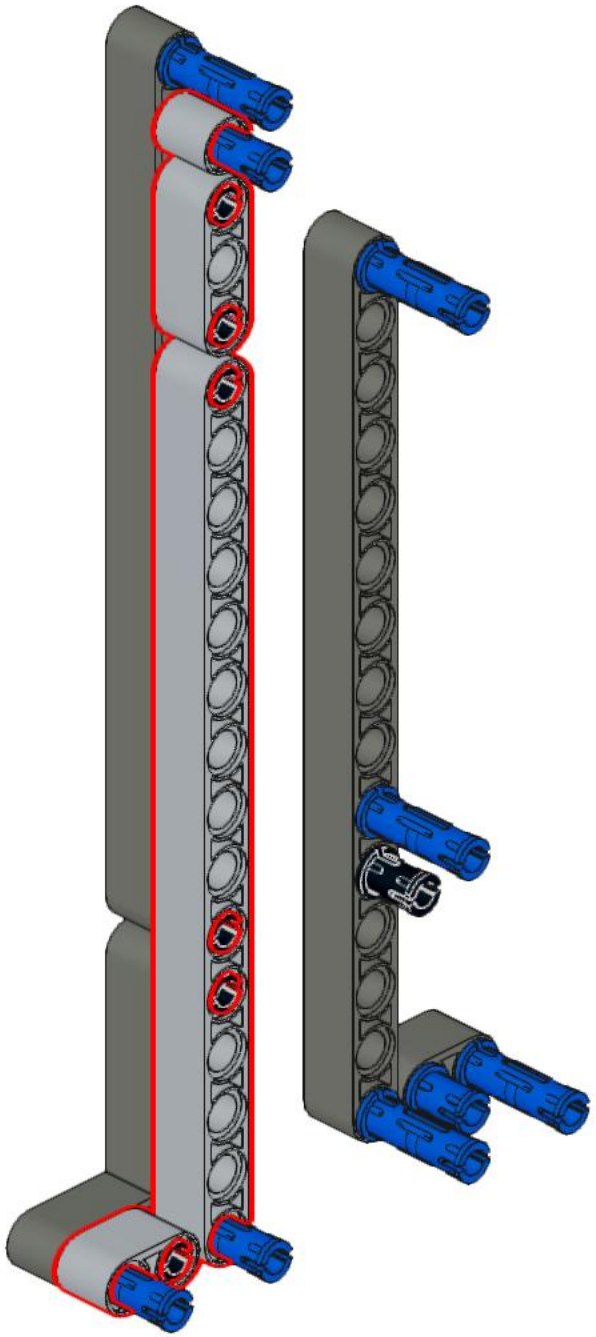

41

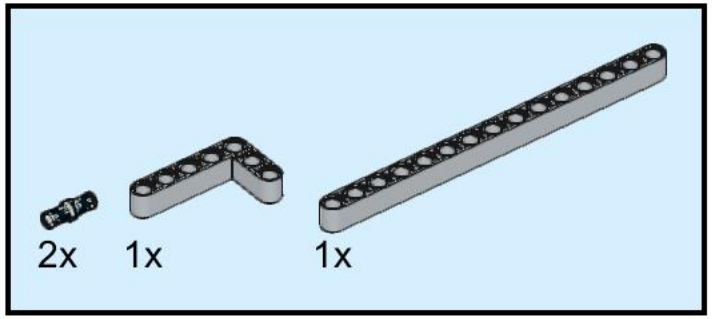

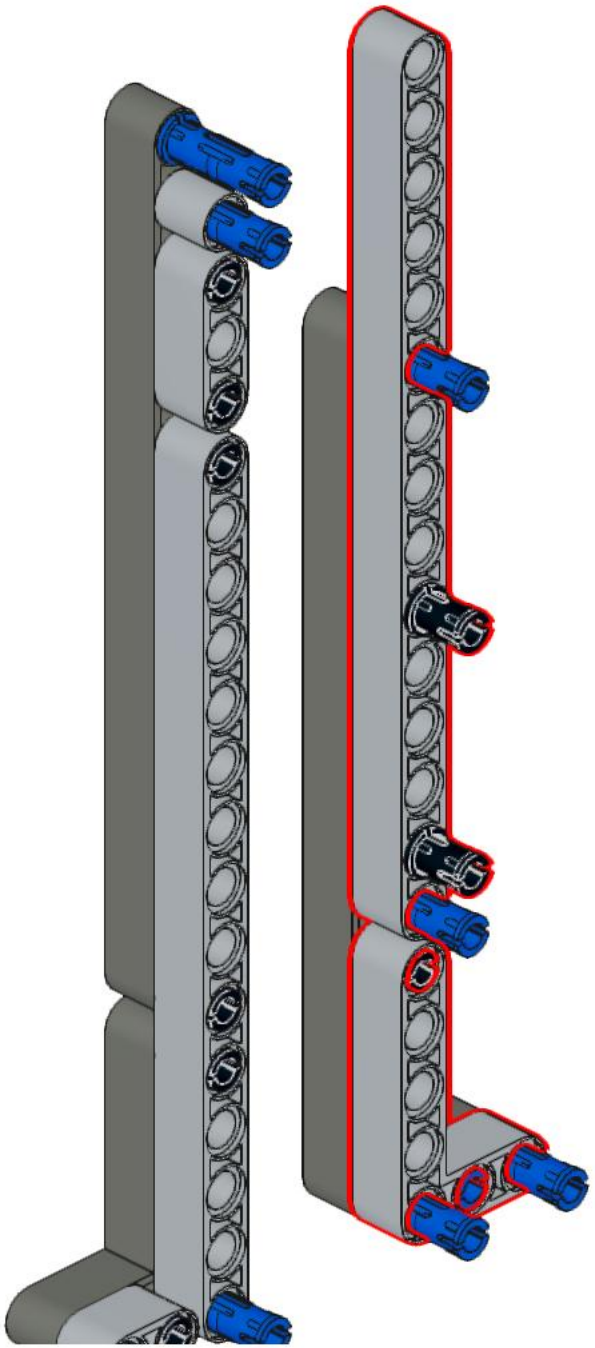

42

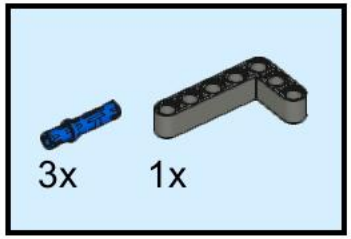

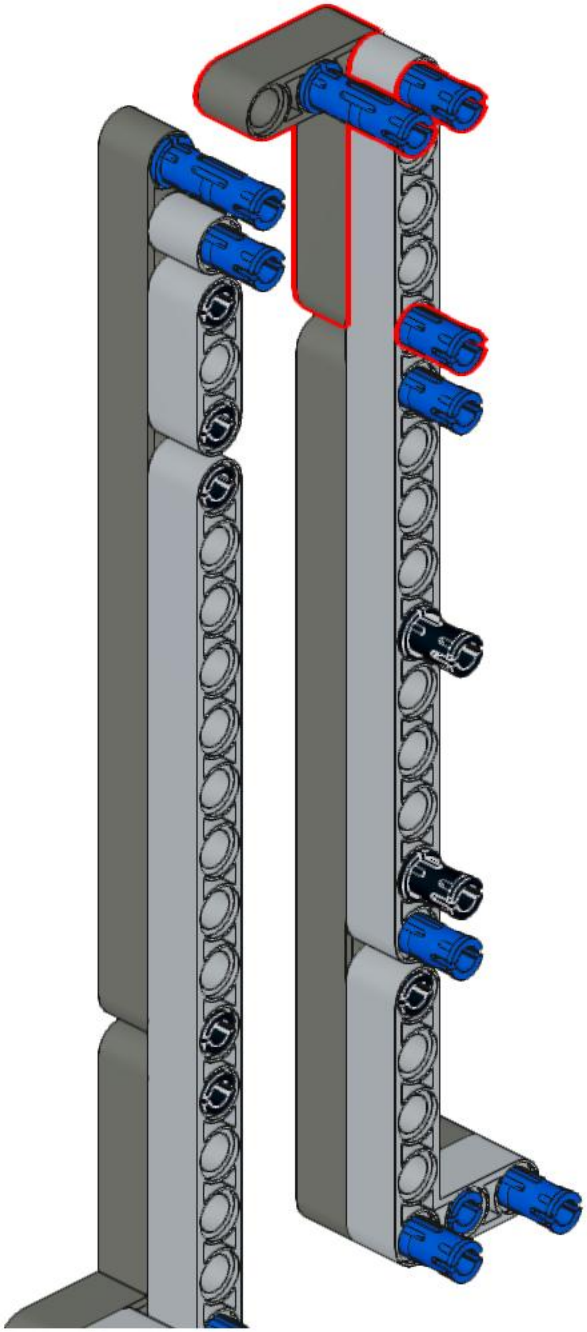

43

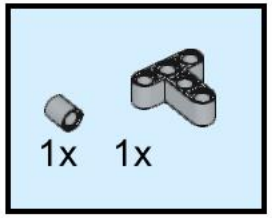

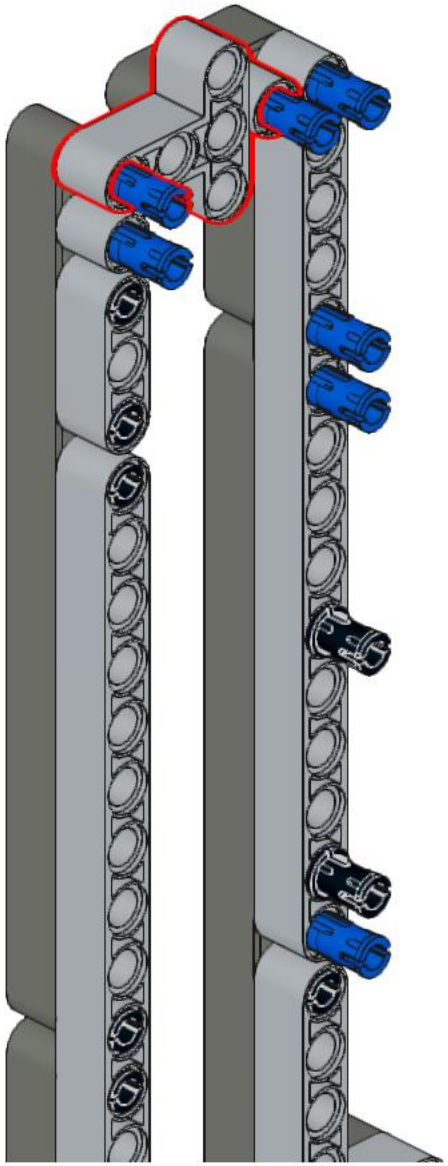

44

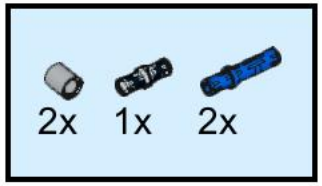

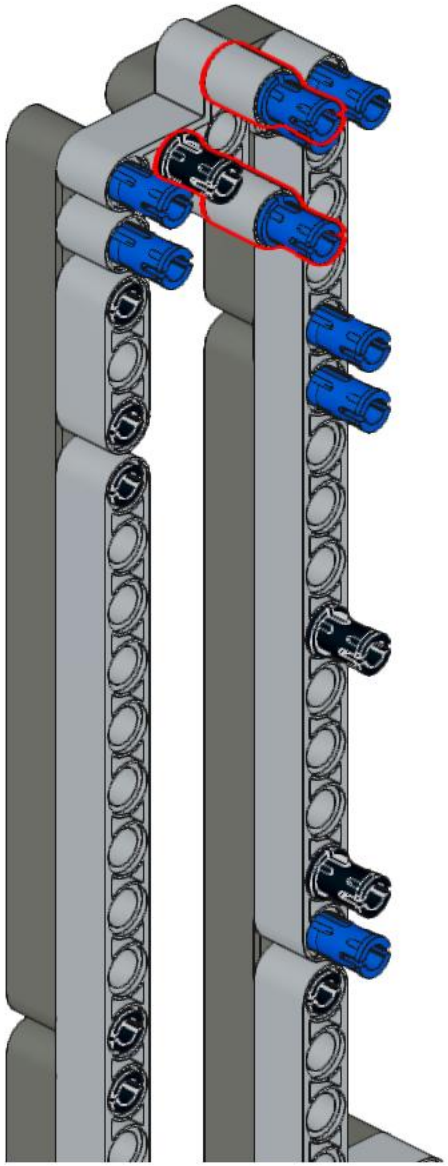

45

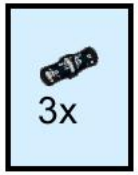

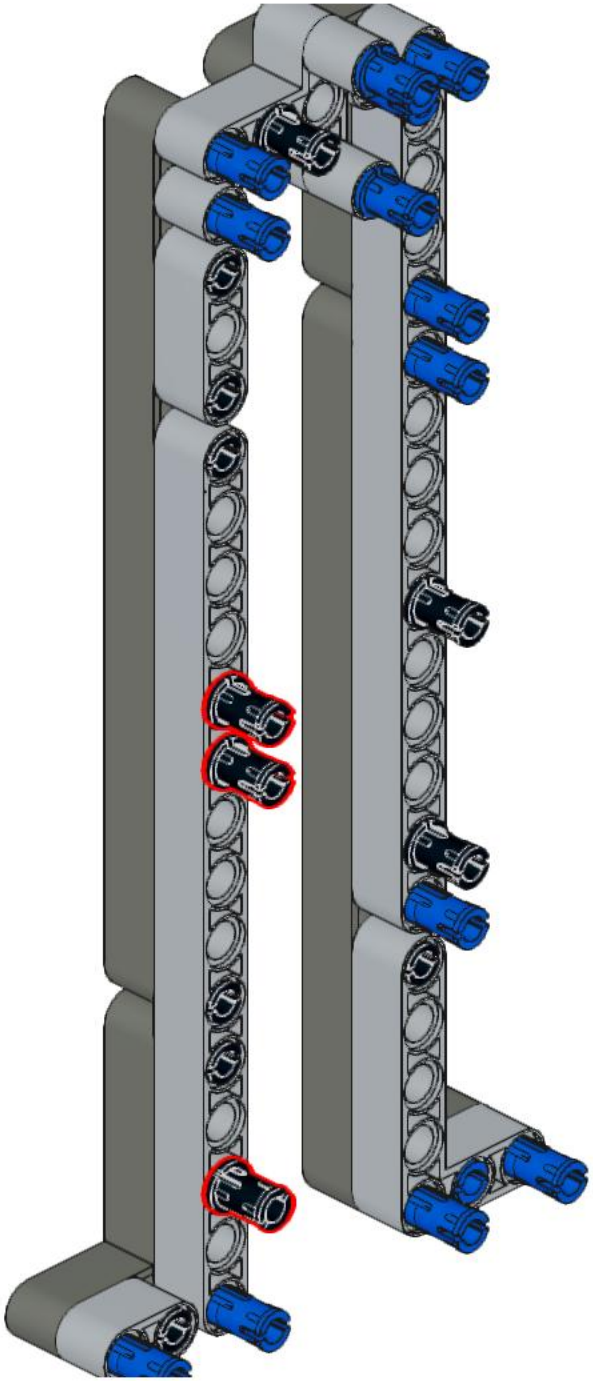

46

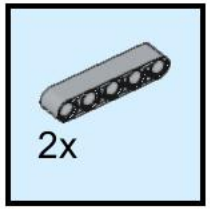

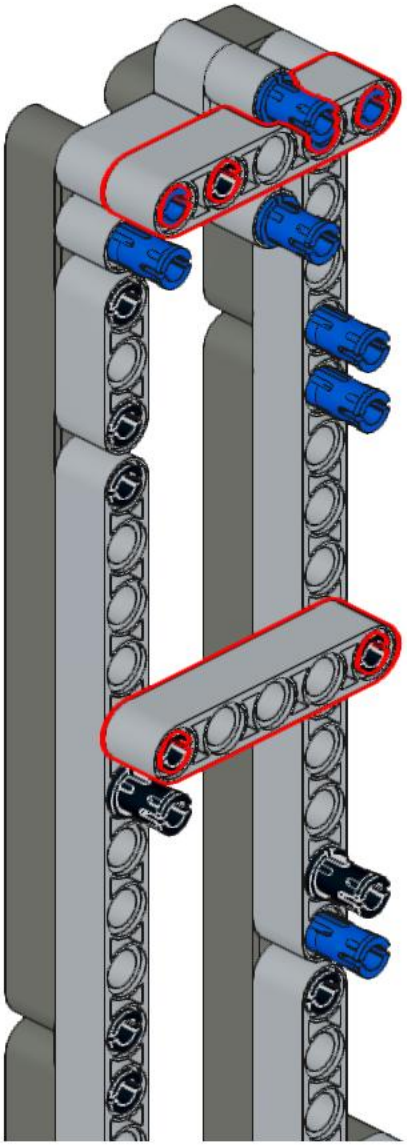

47

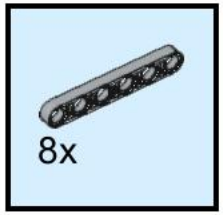

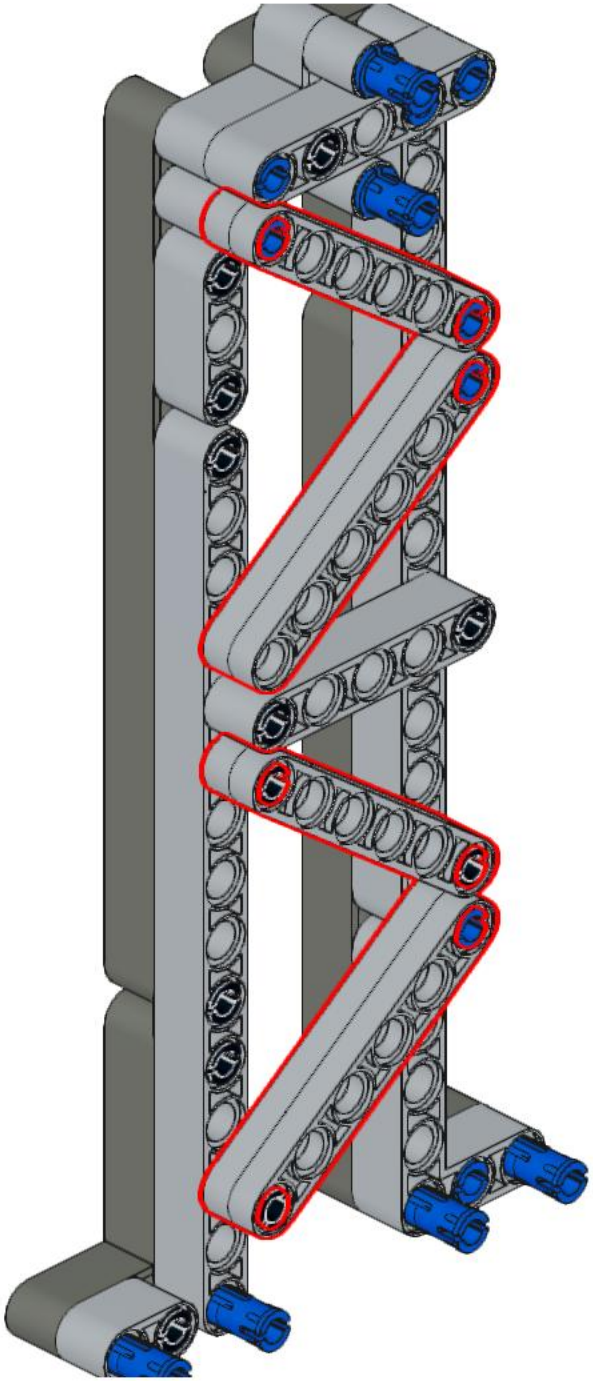

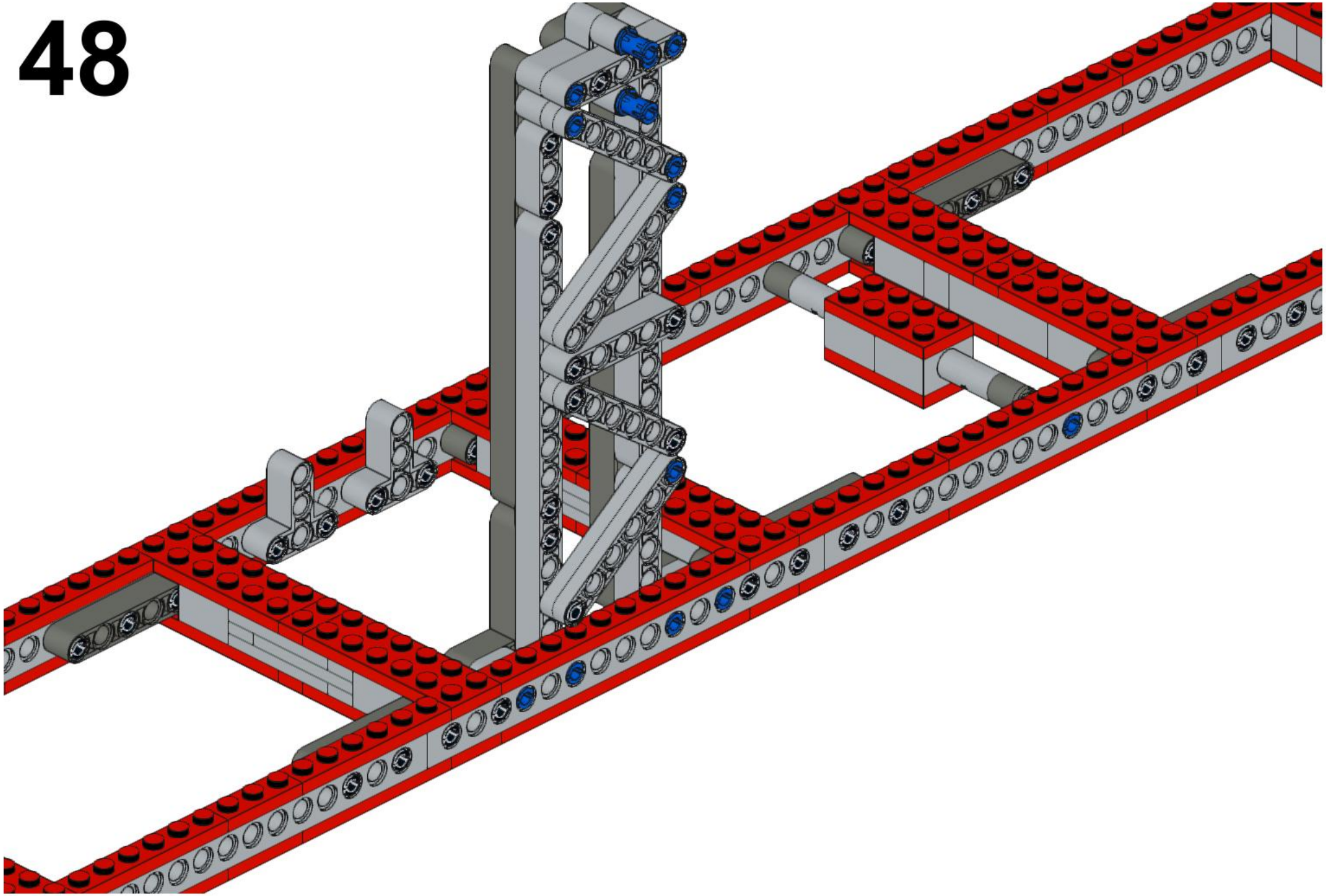

49

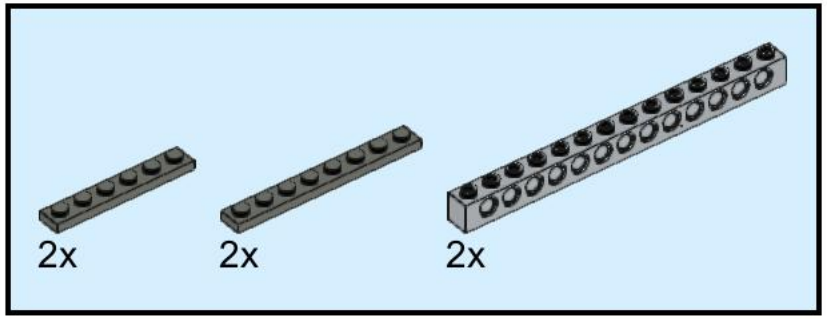

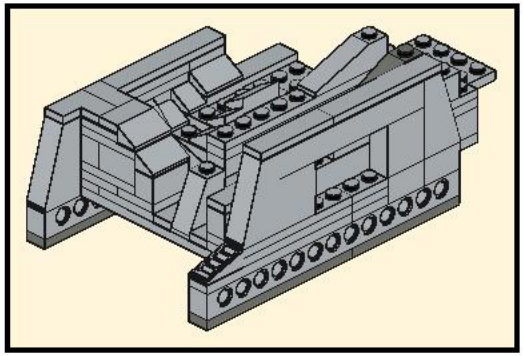

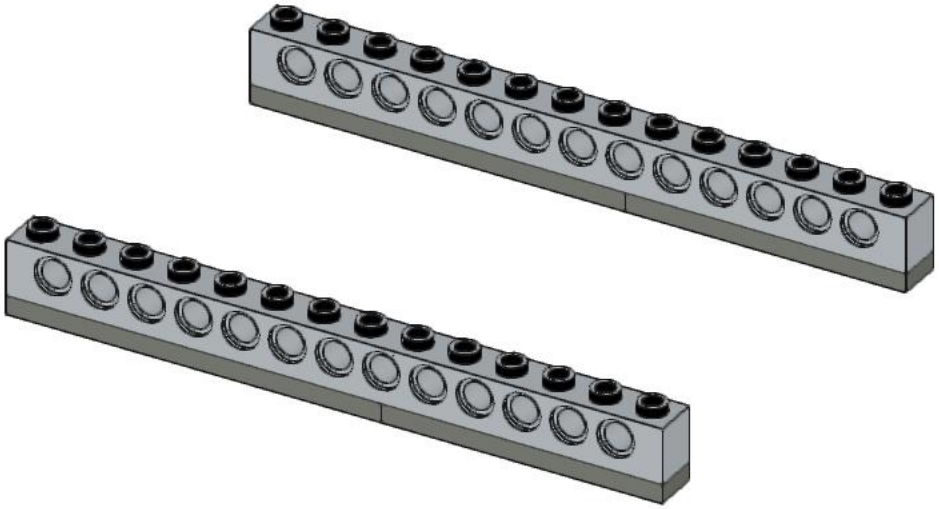

50

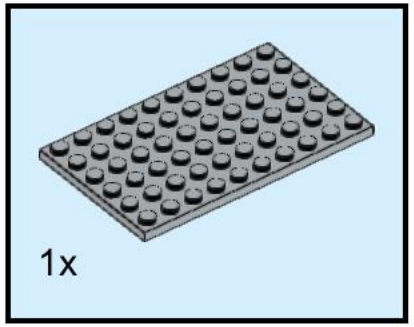

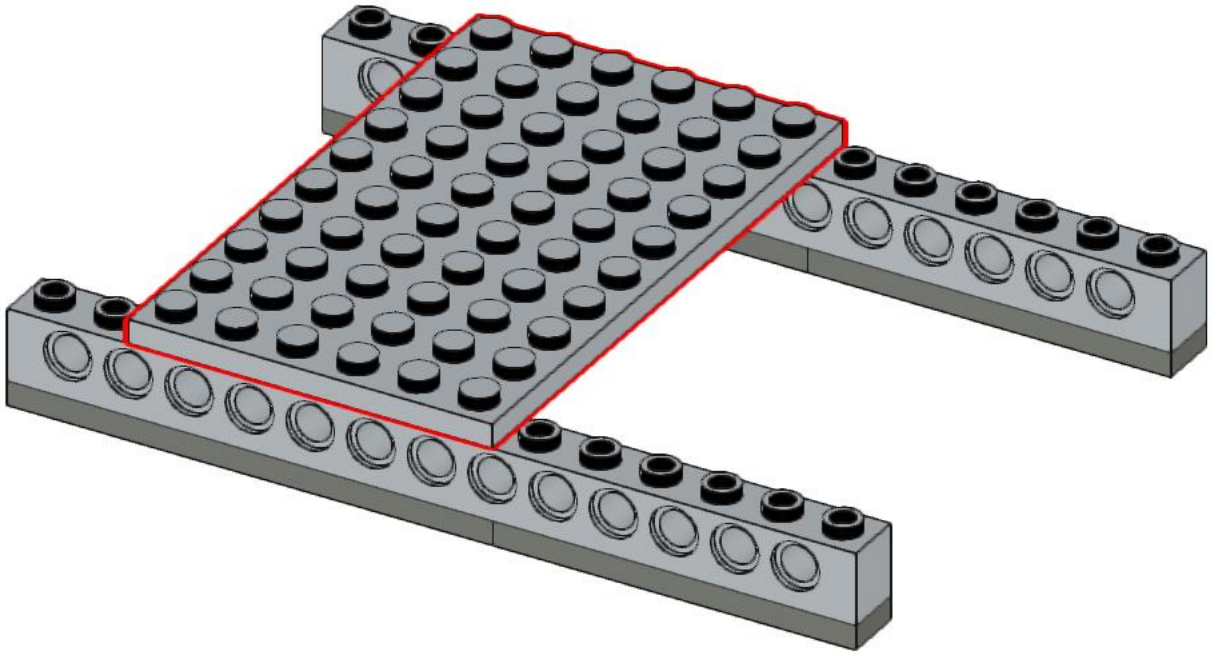

51

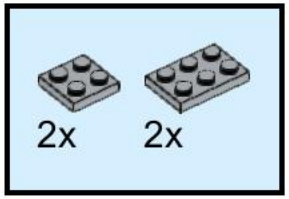

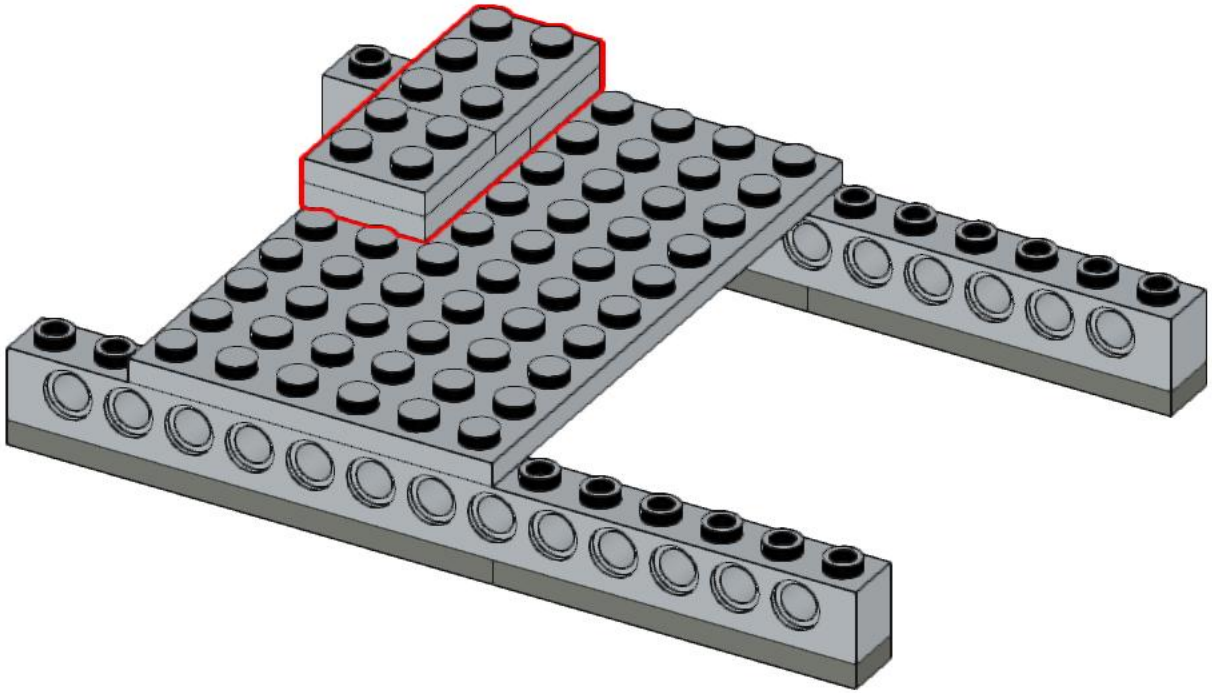

52

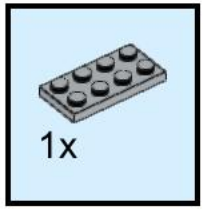

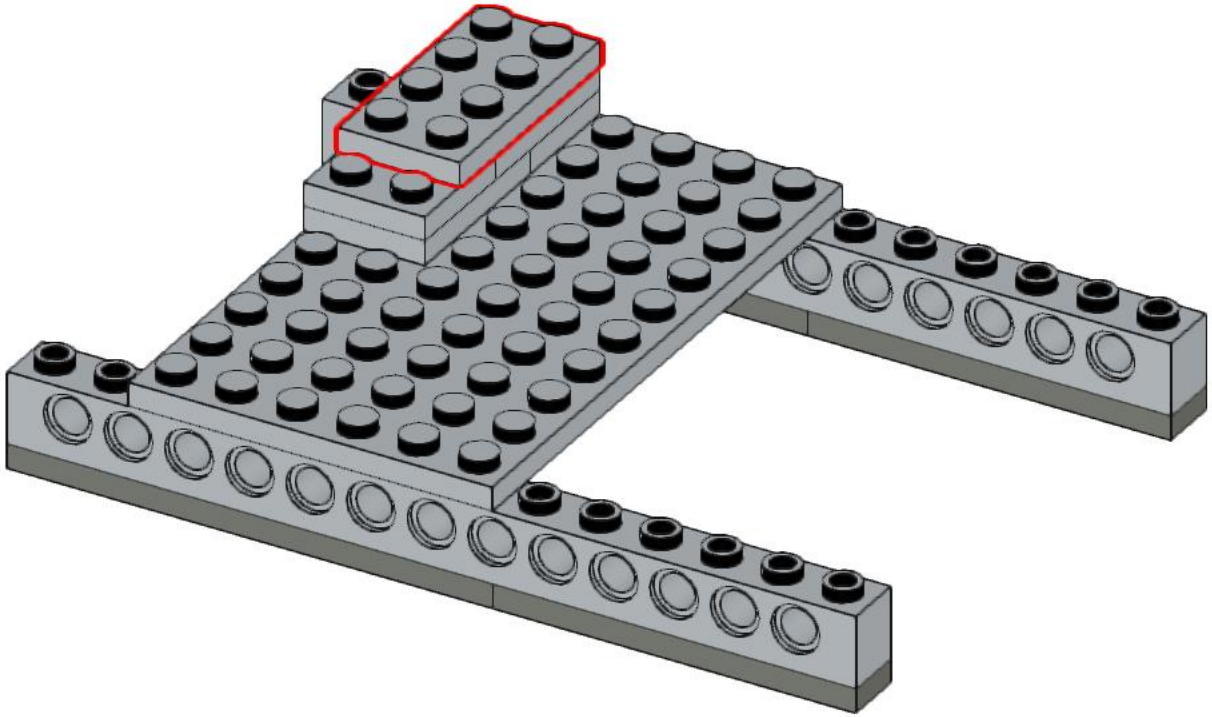

53

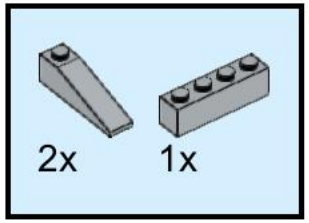

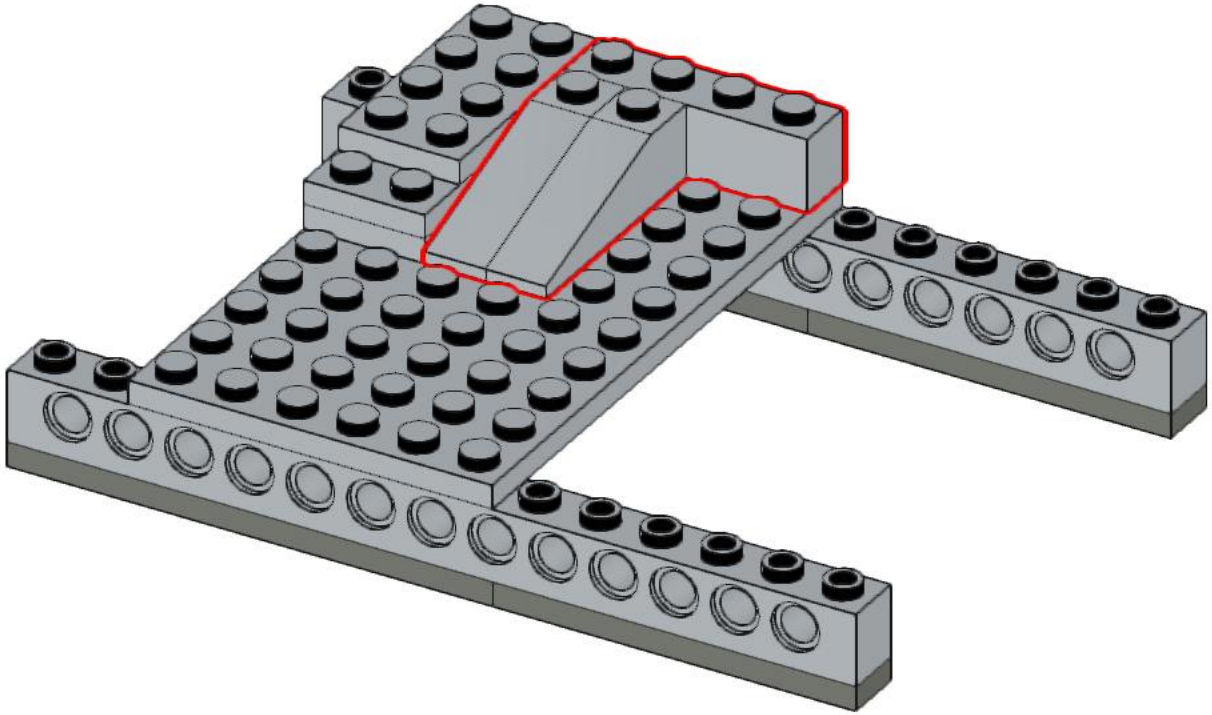

54

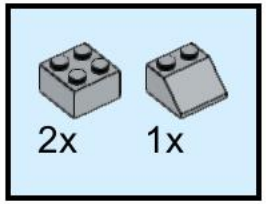

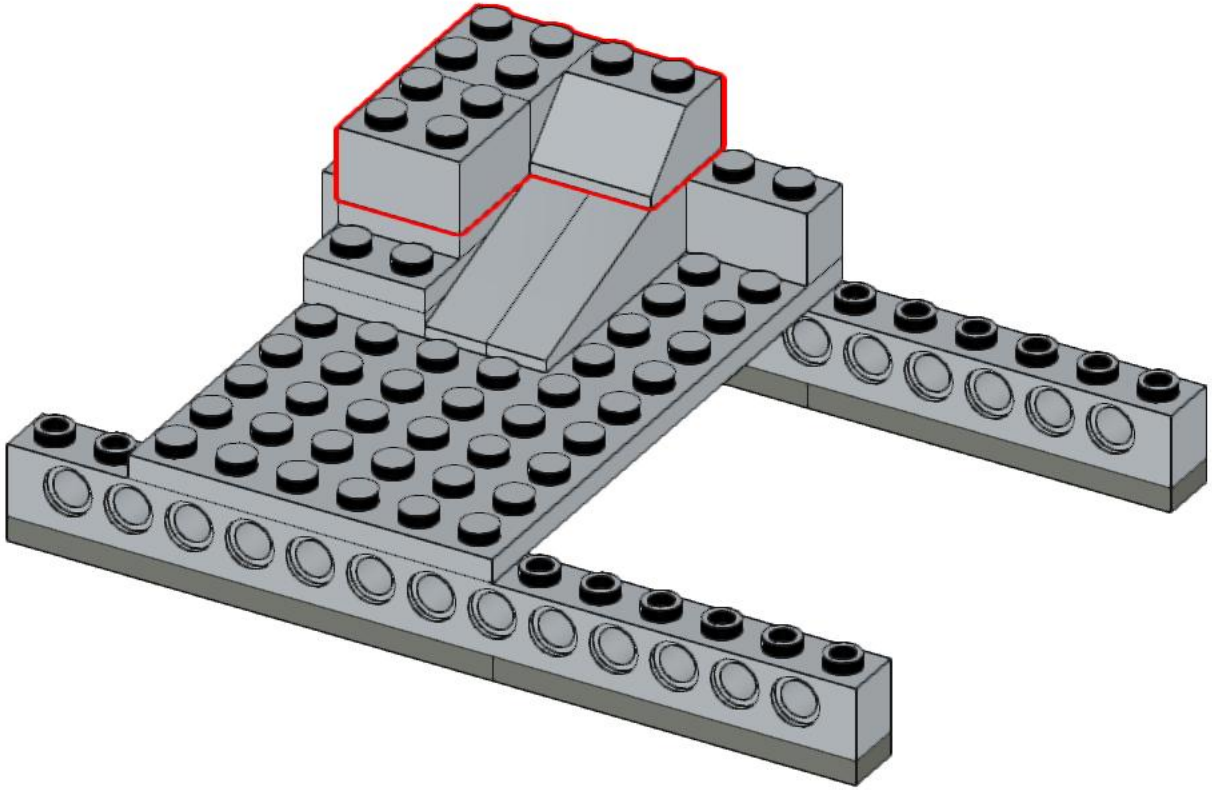

55

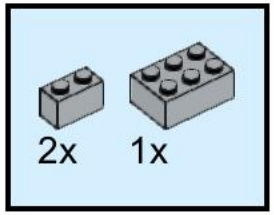

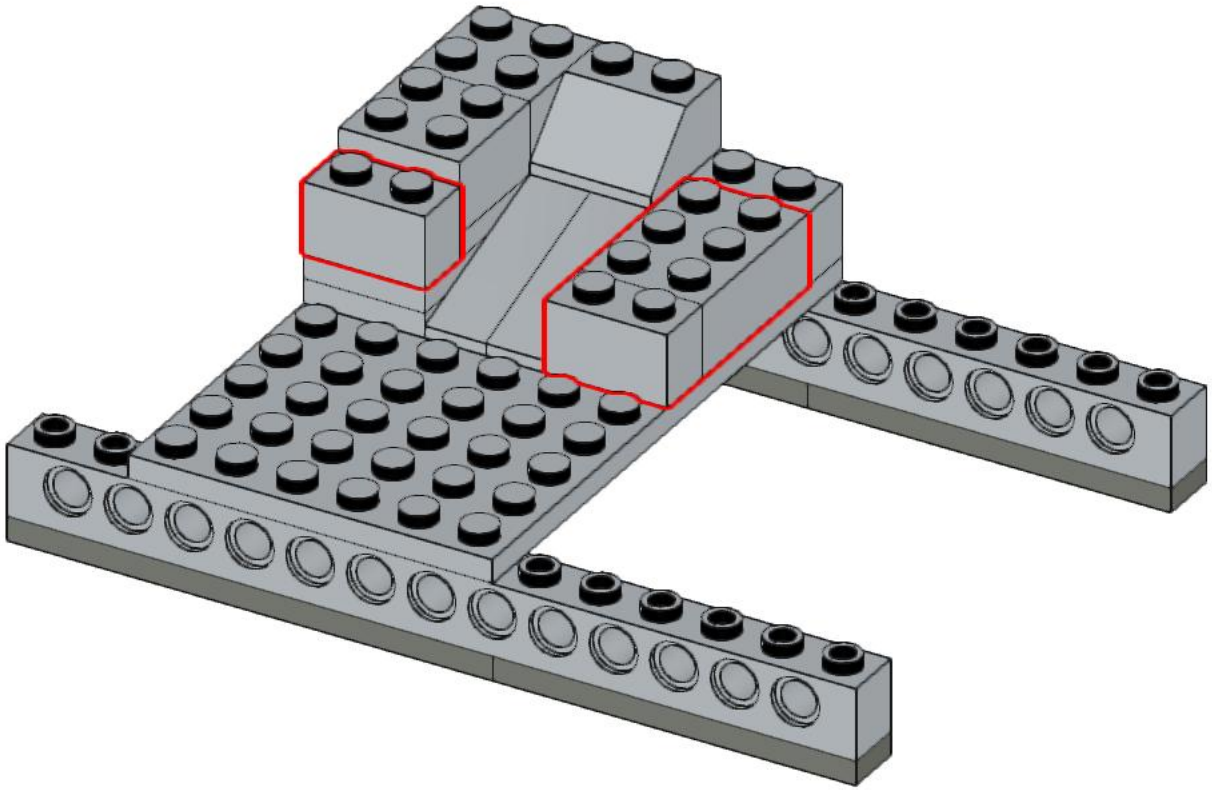

56

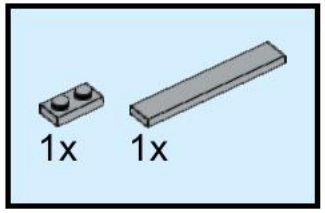

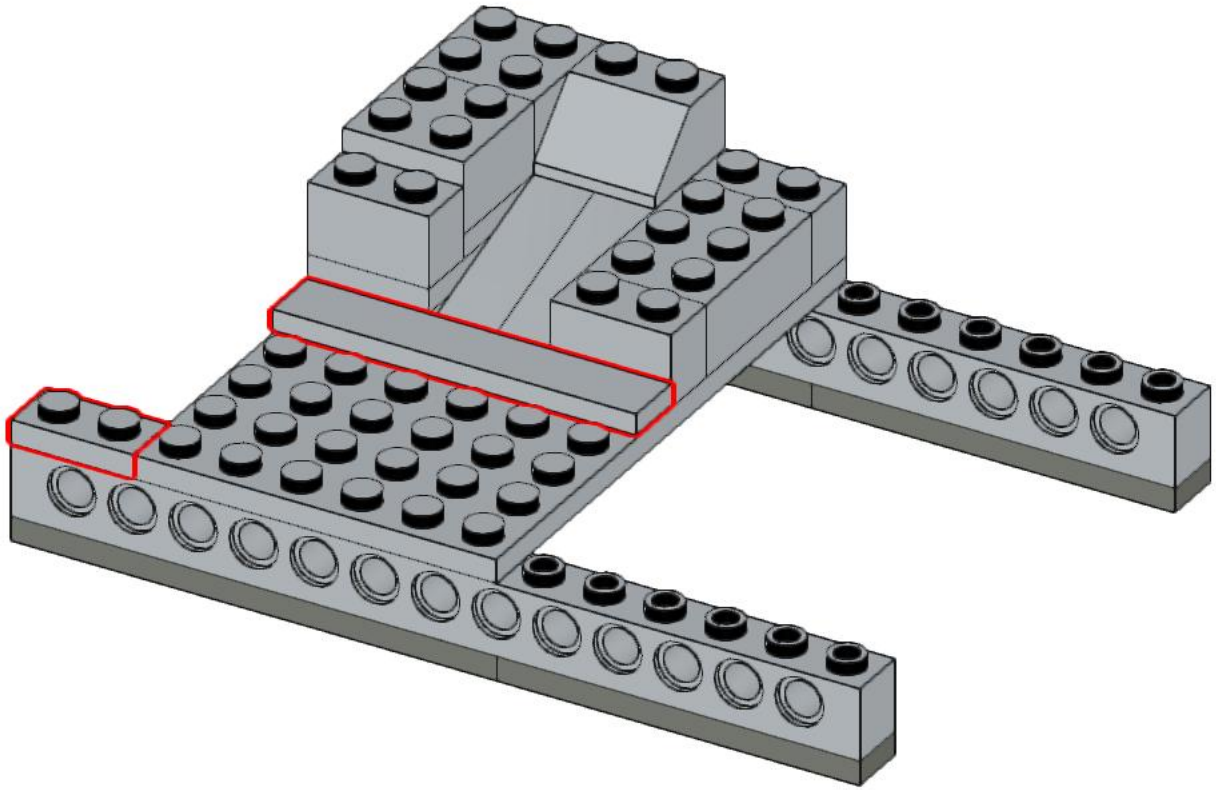

57

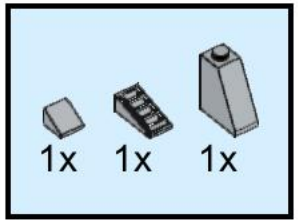

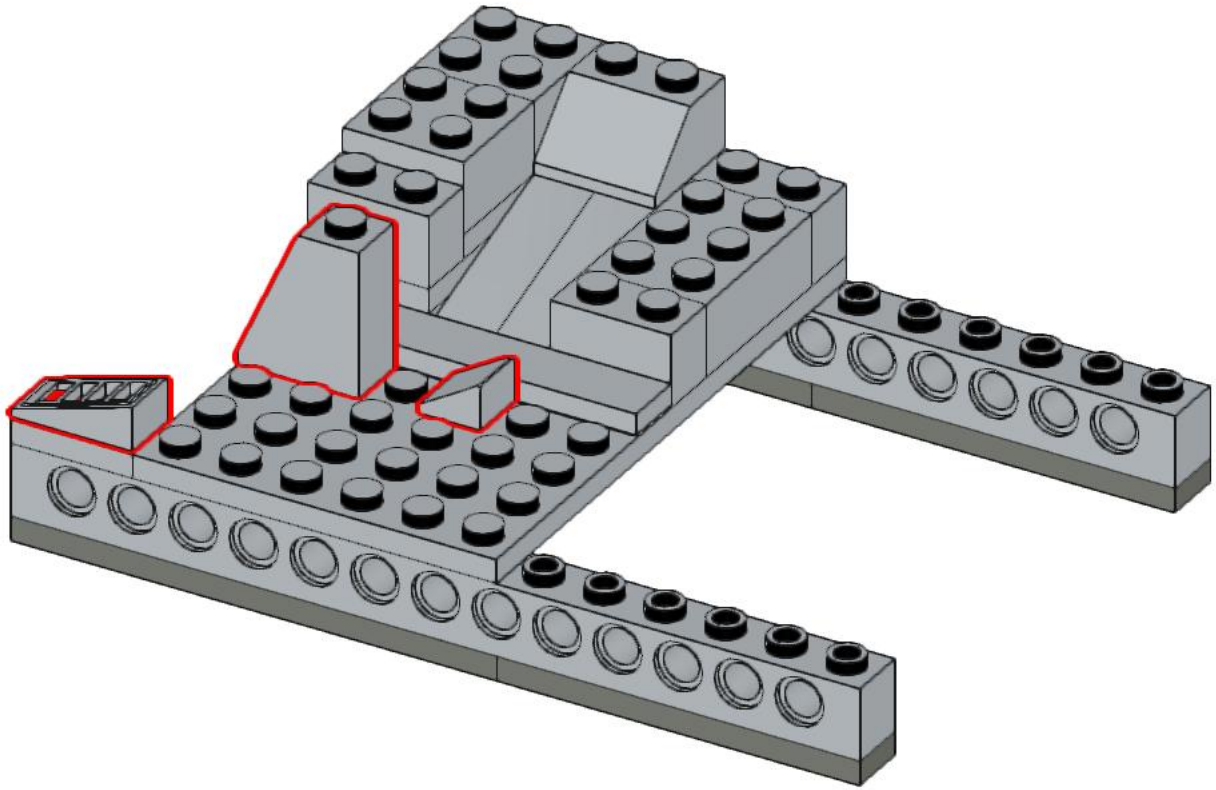

58

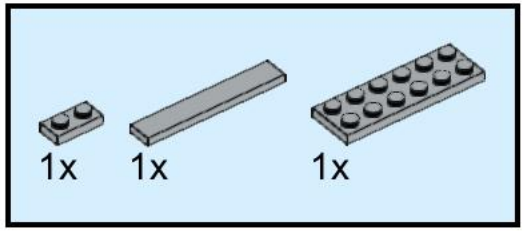

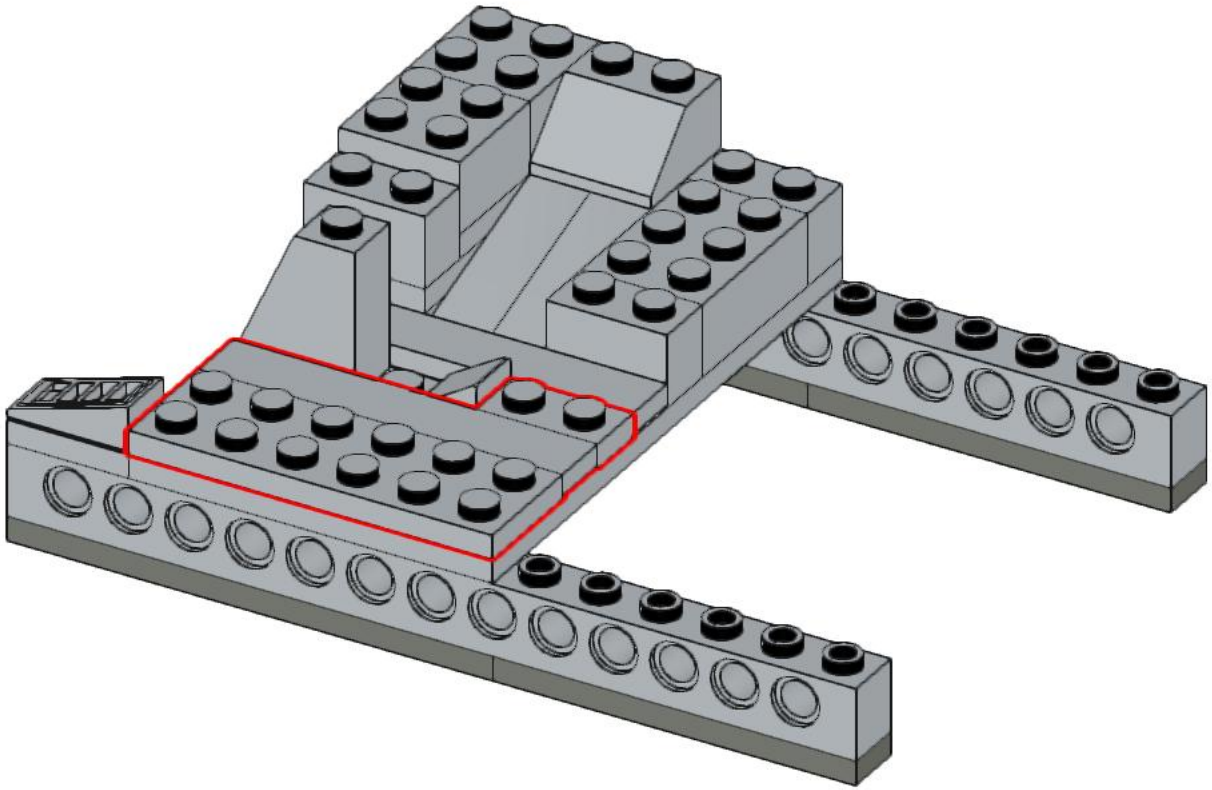

59

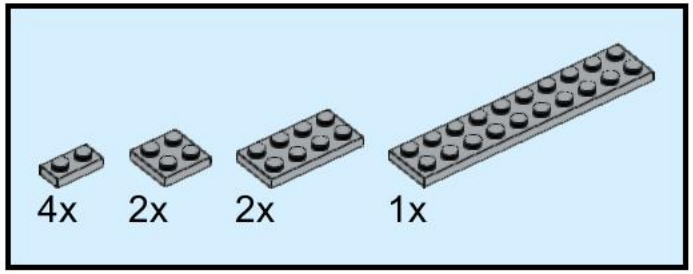

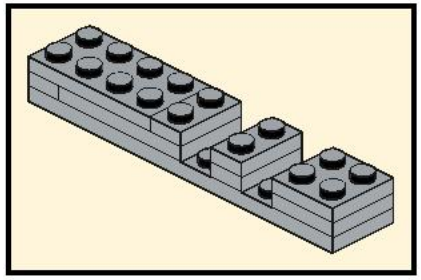

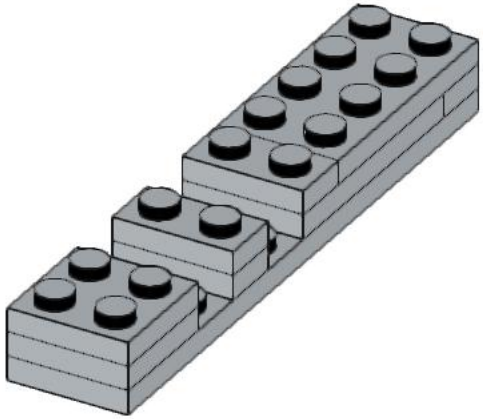

60

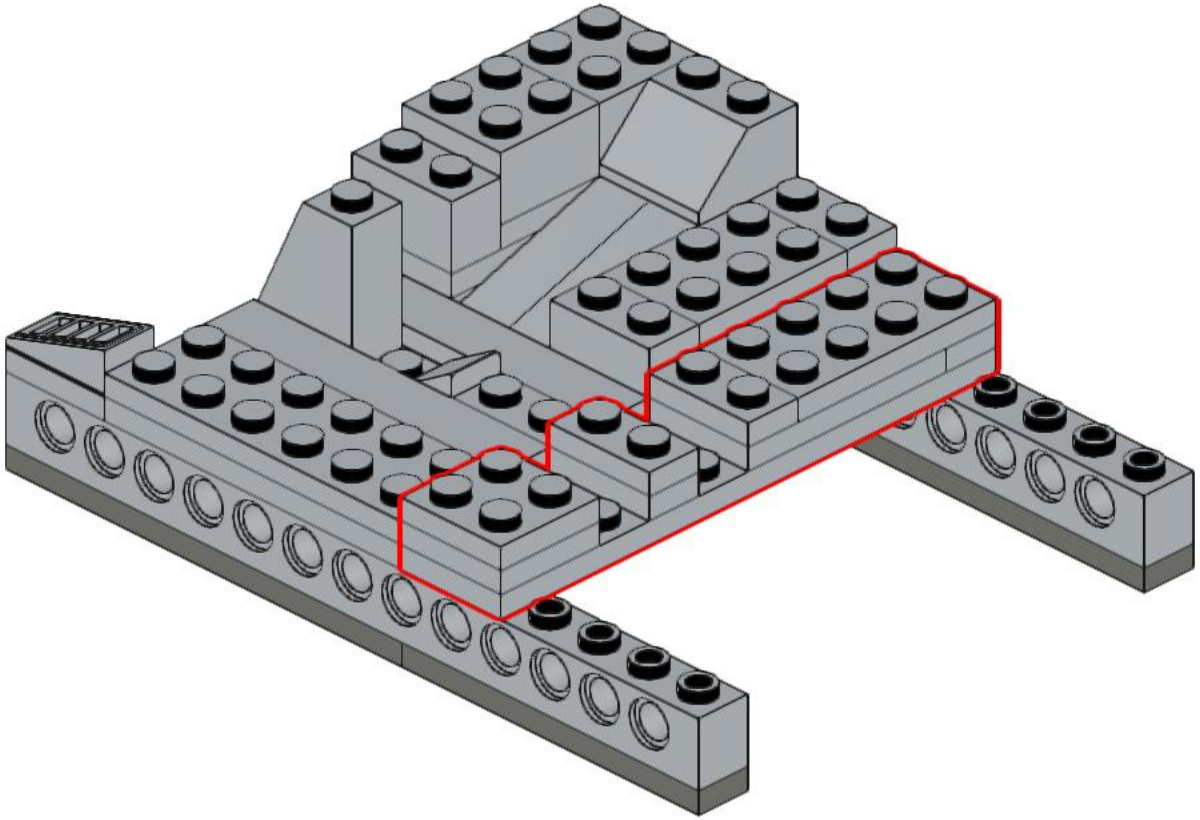

61

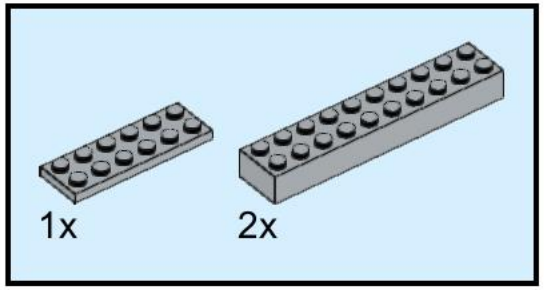

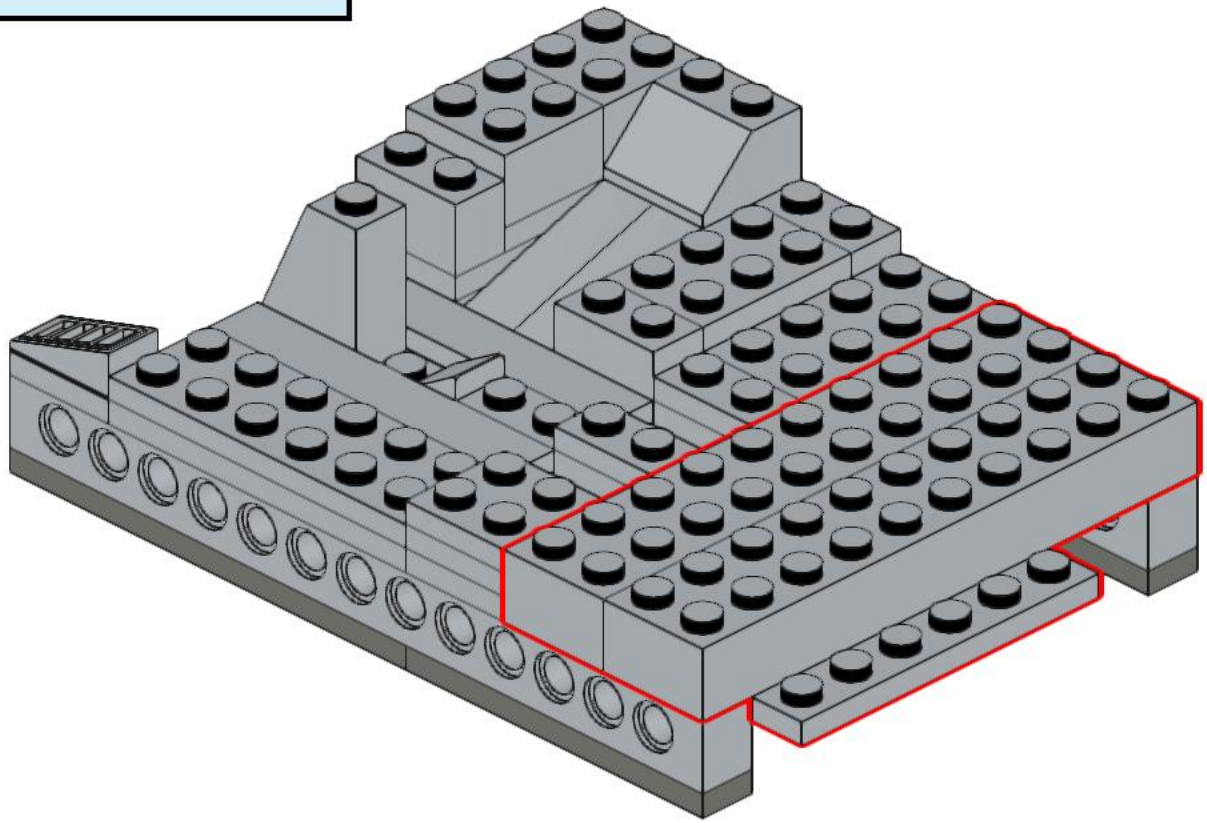

62

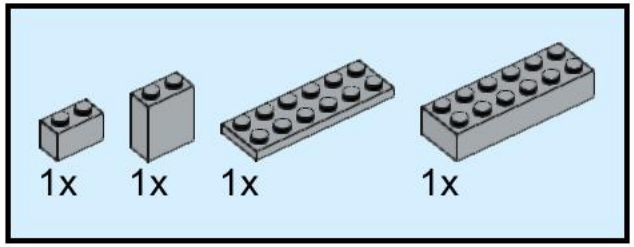

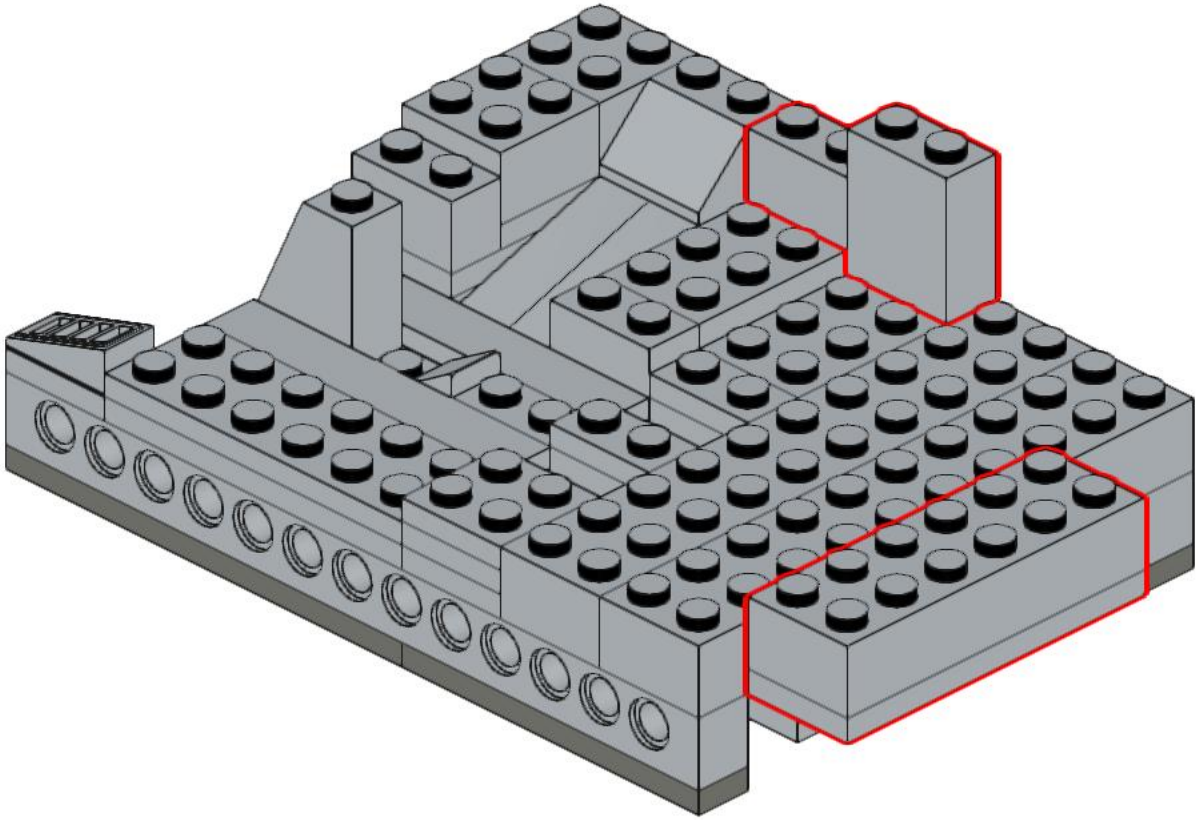

63

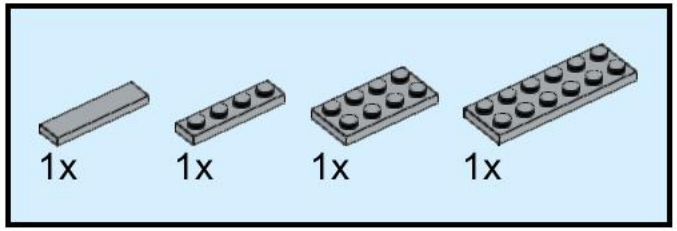

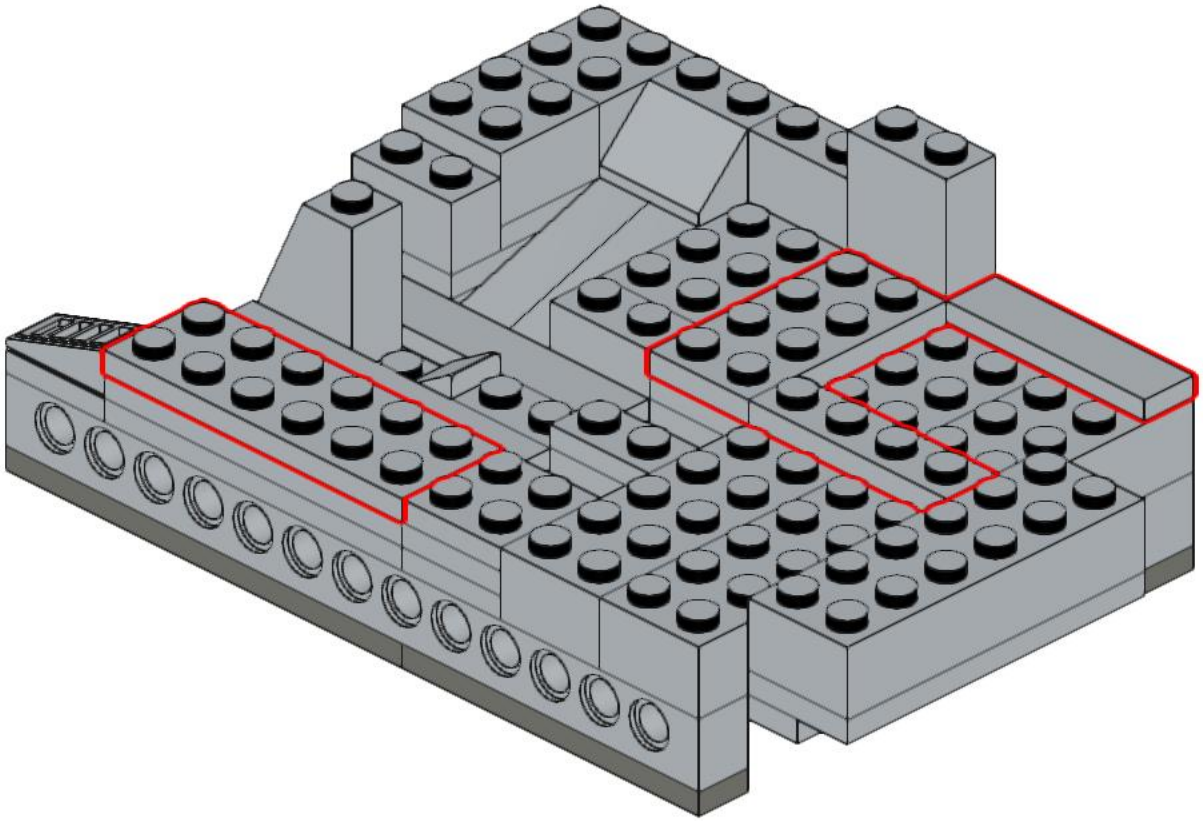

64

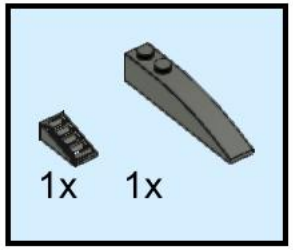

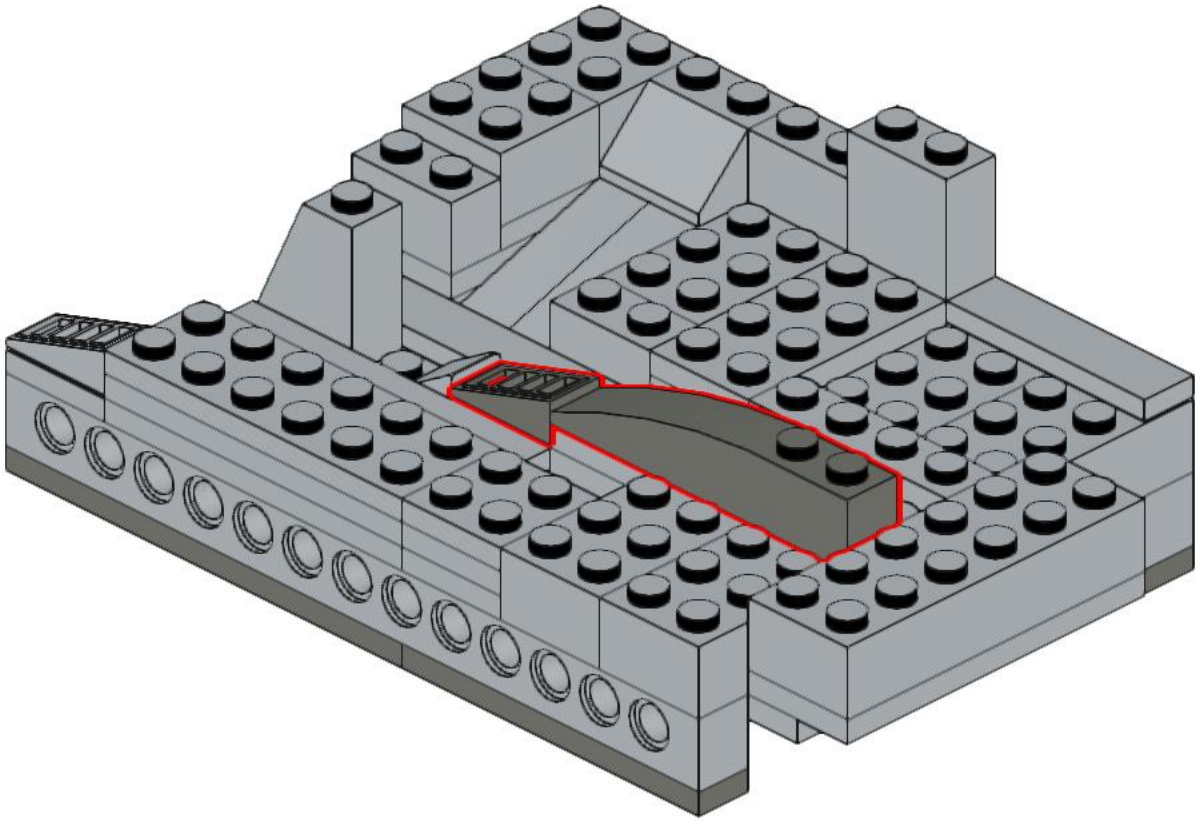

65

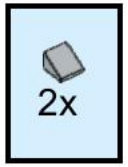

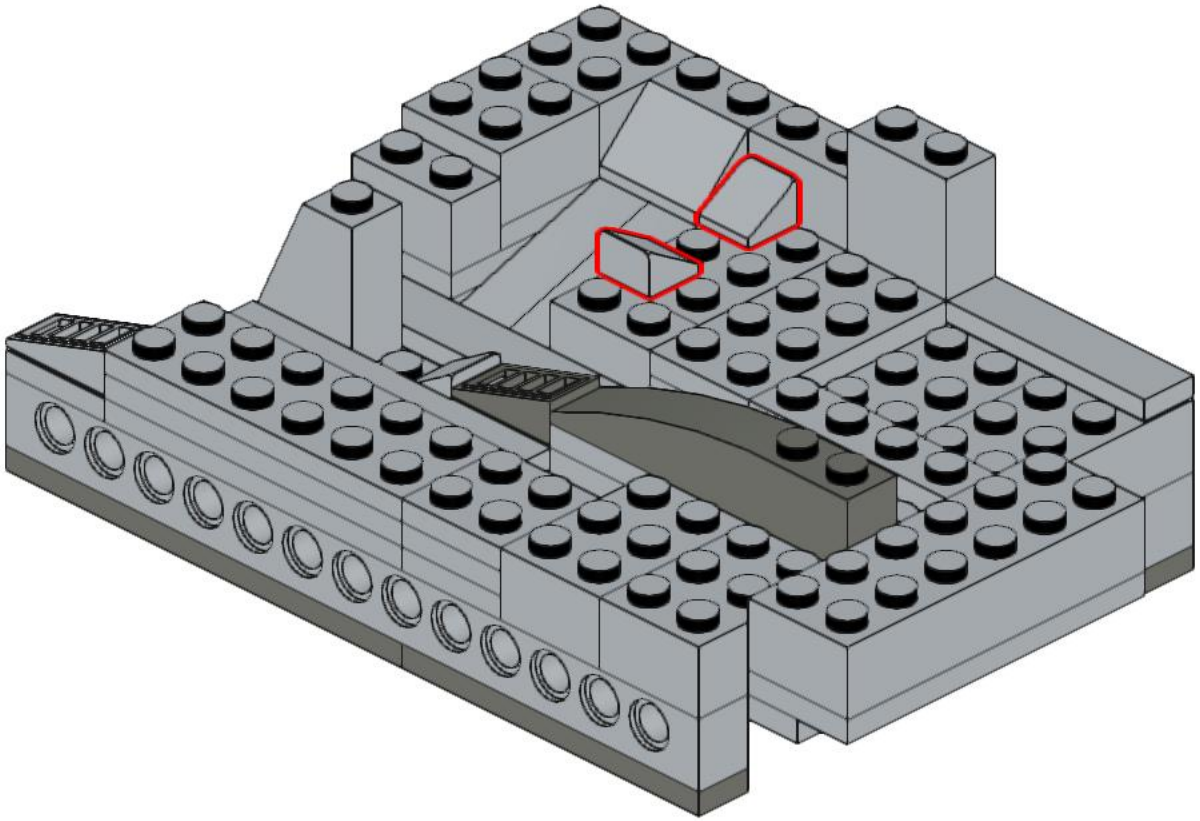

66

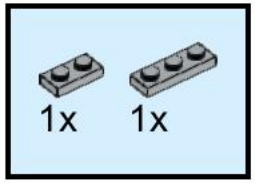

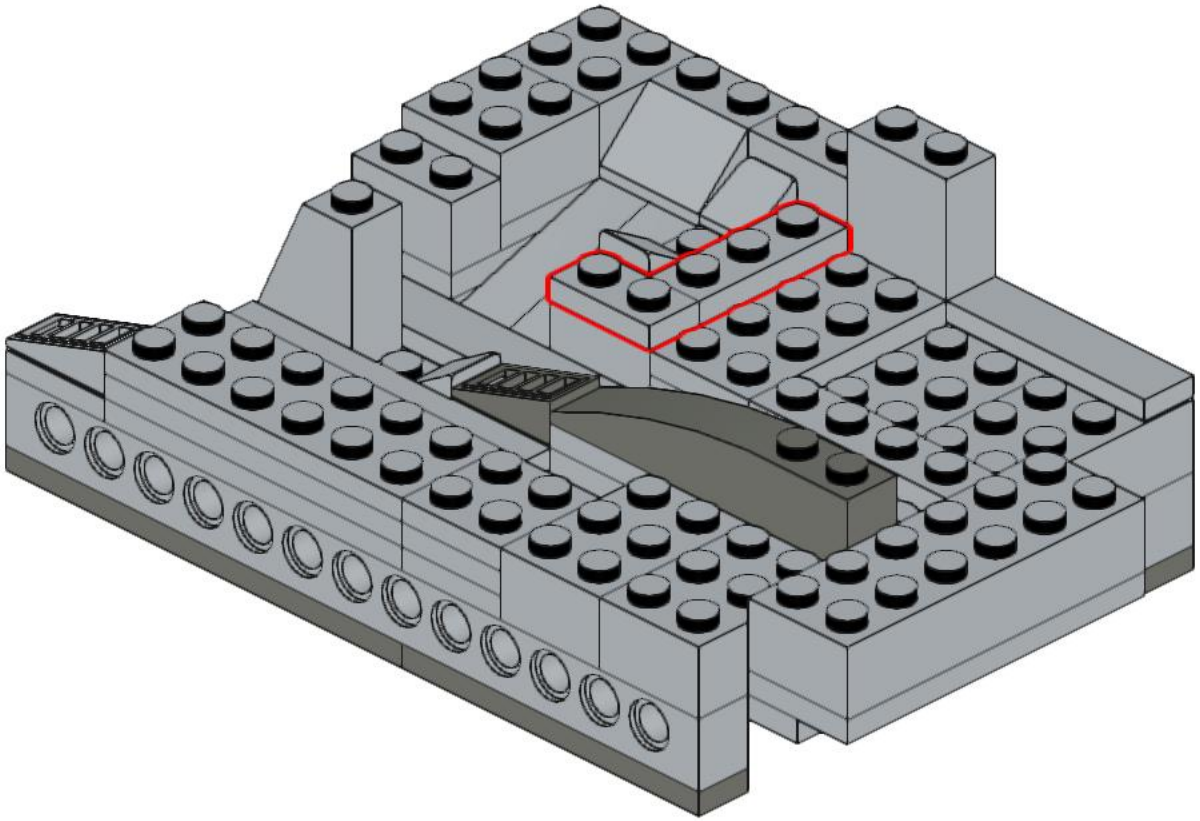

67

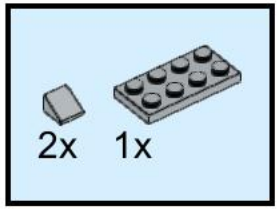

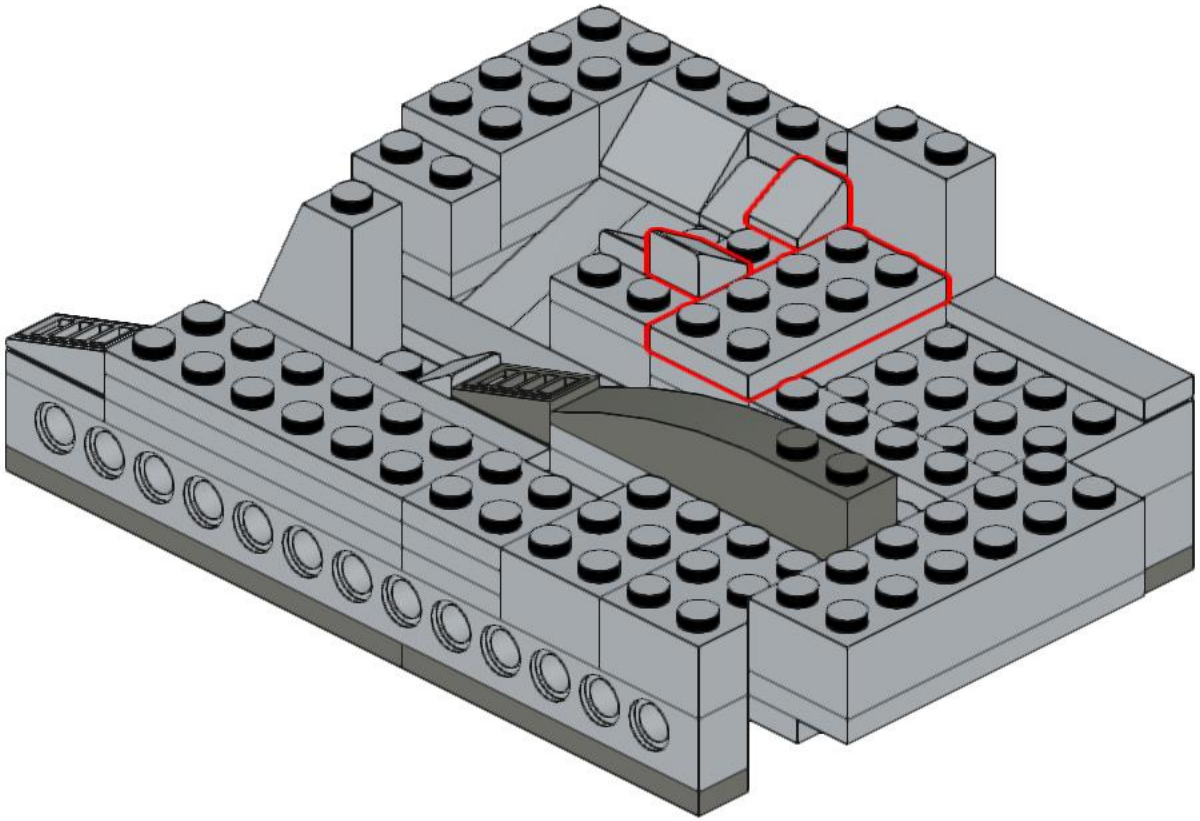

68

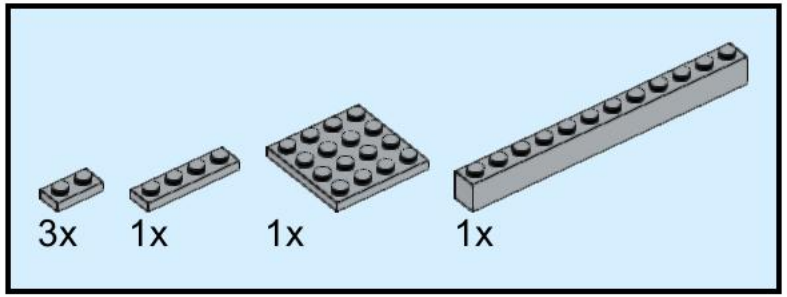

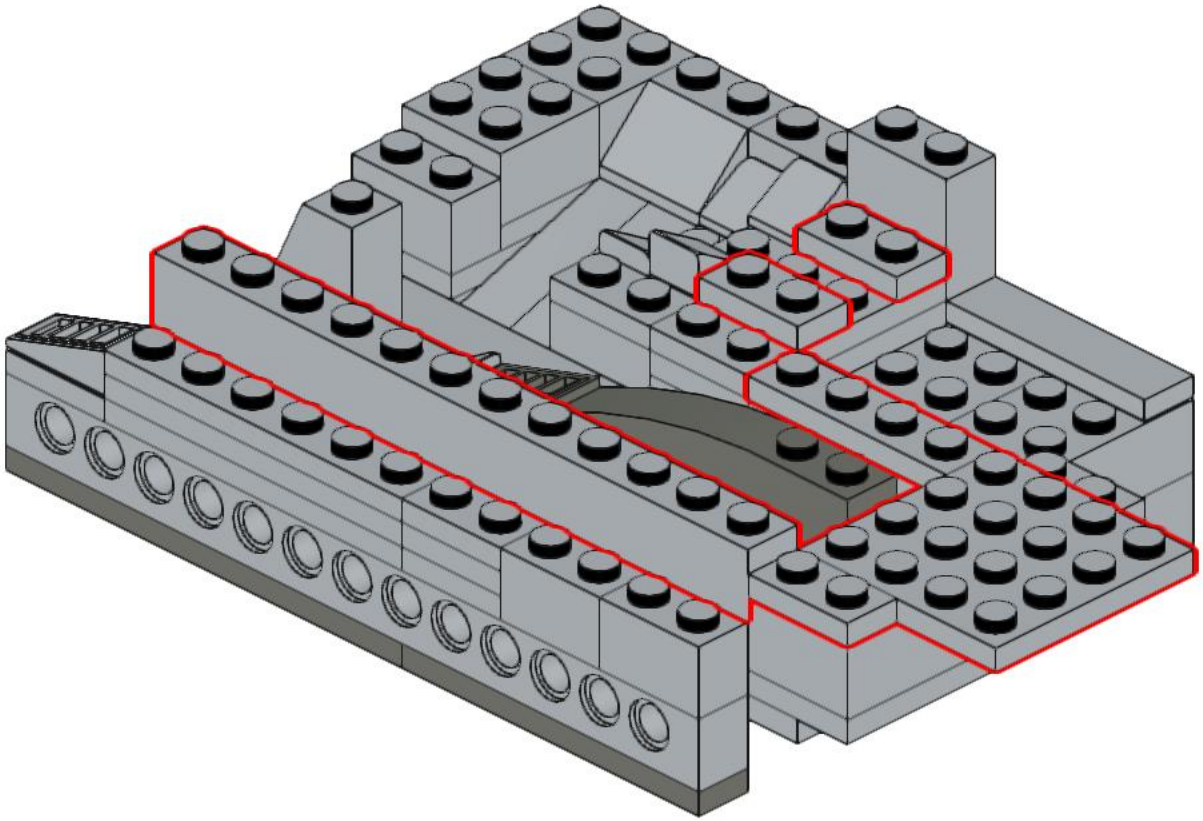

69

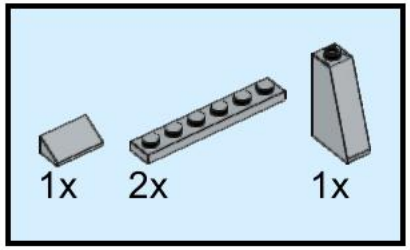

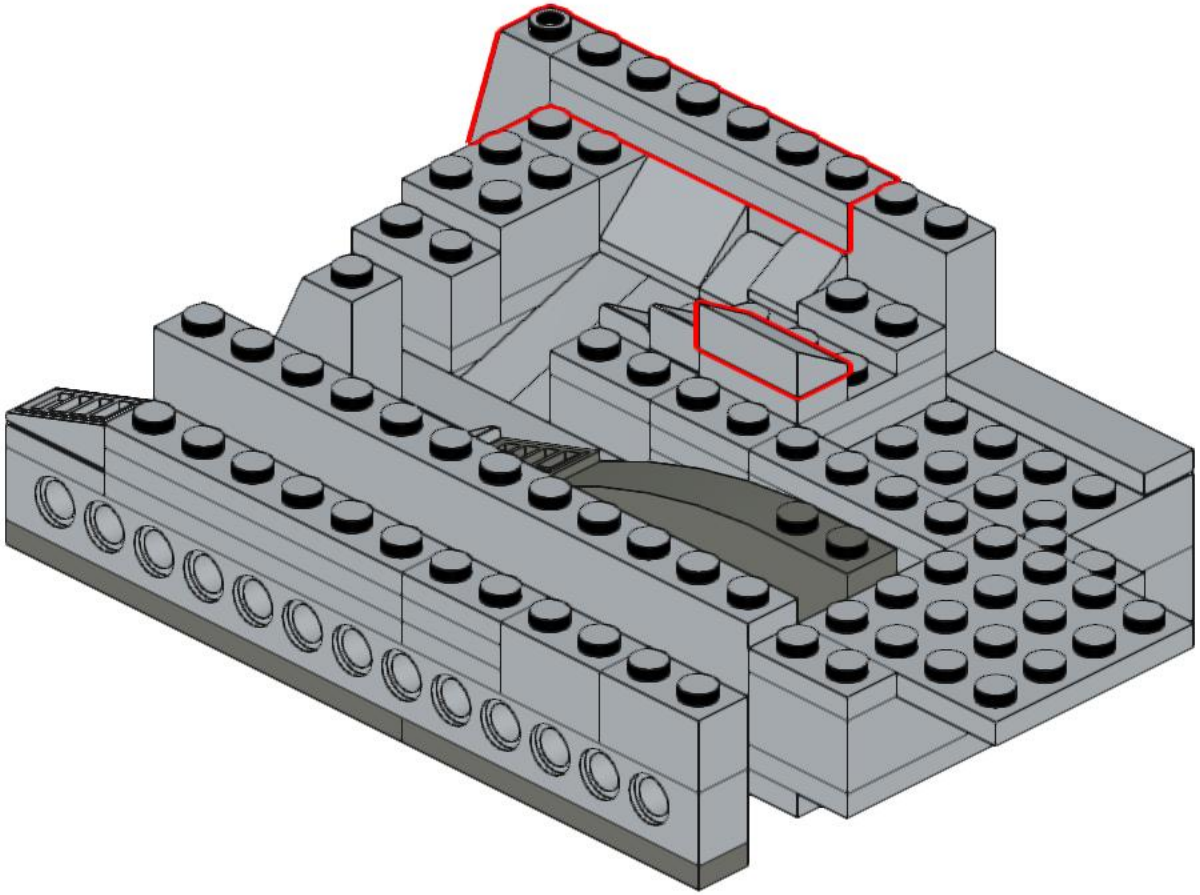

70

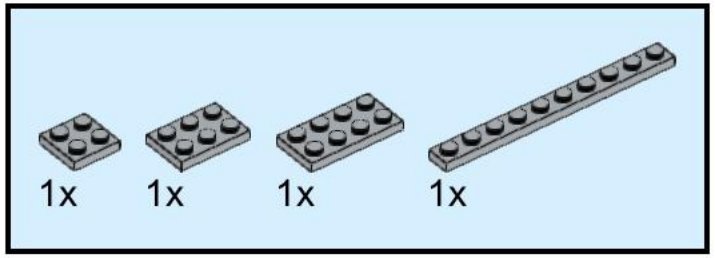

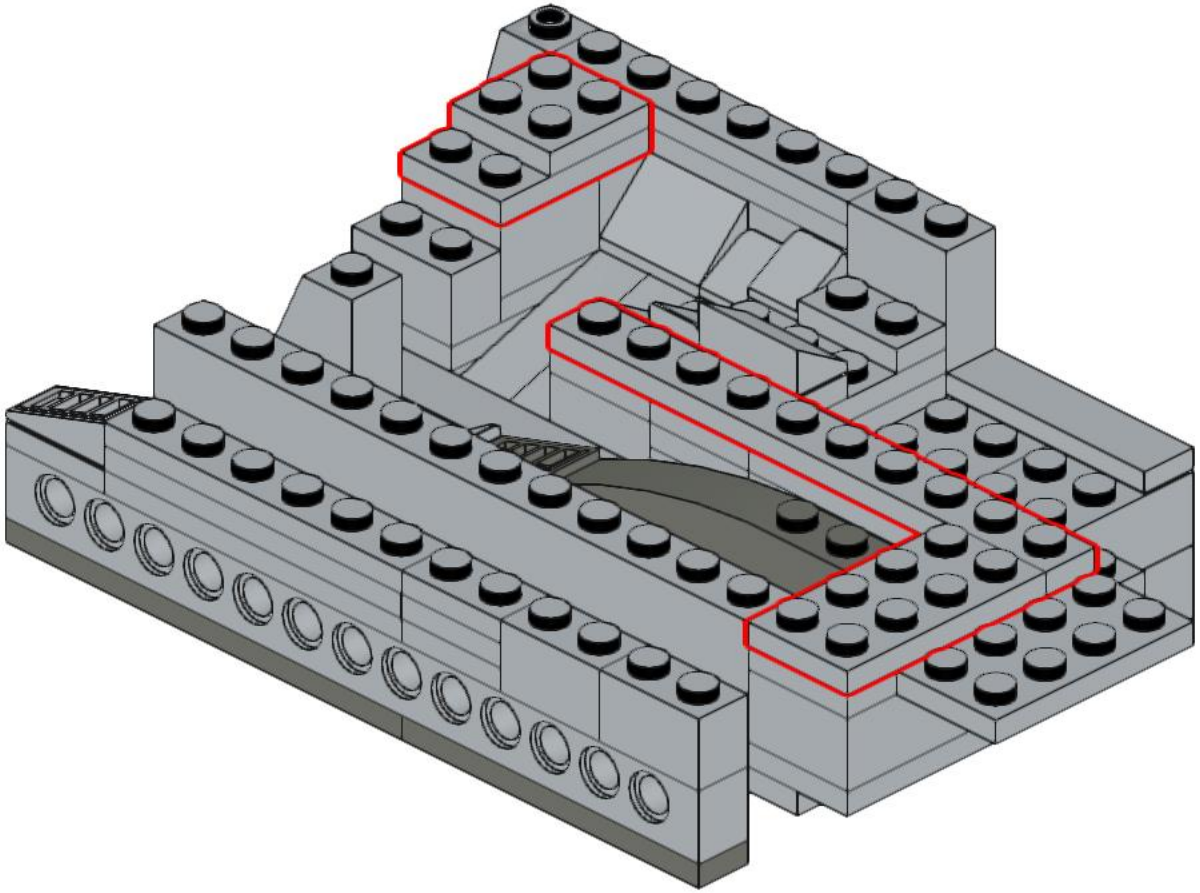

71

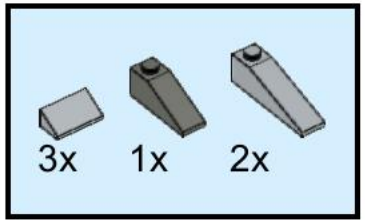

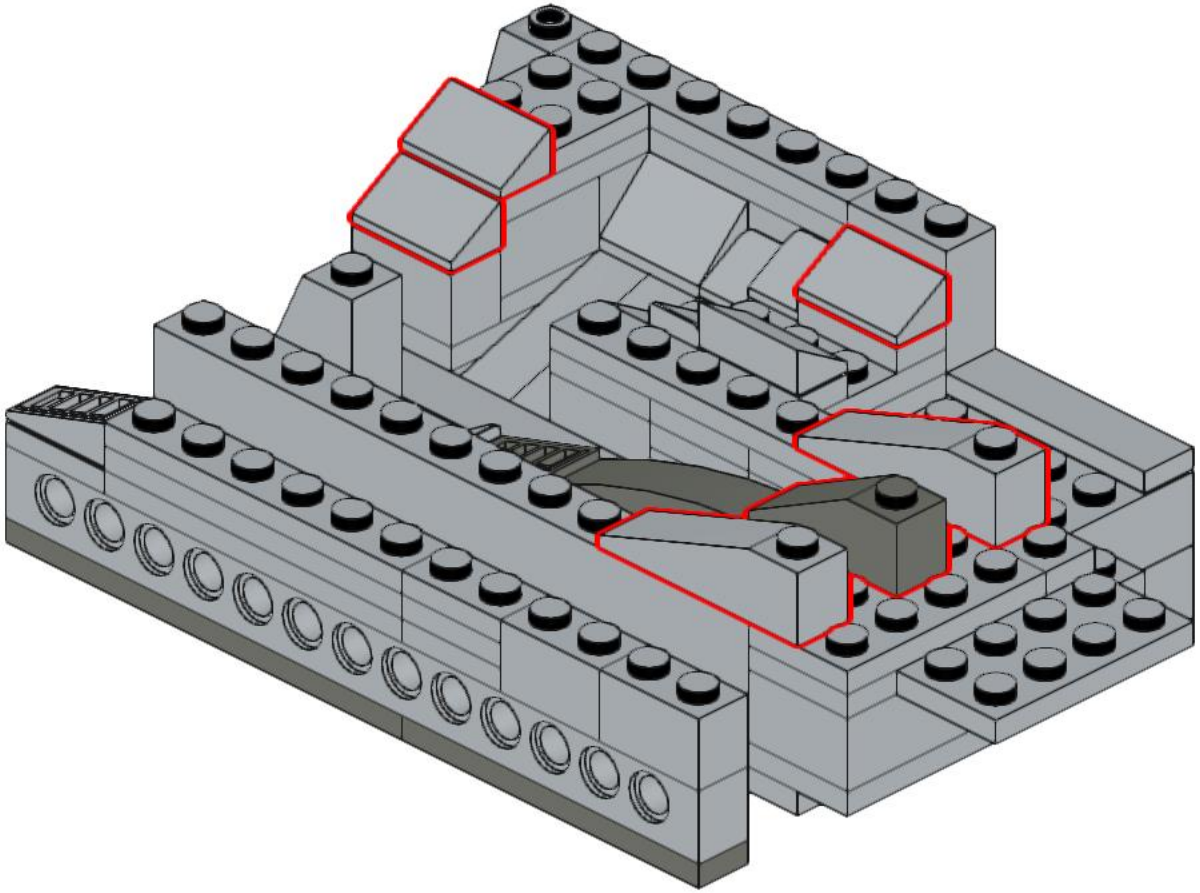

72

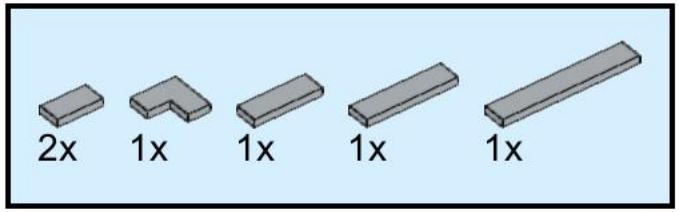

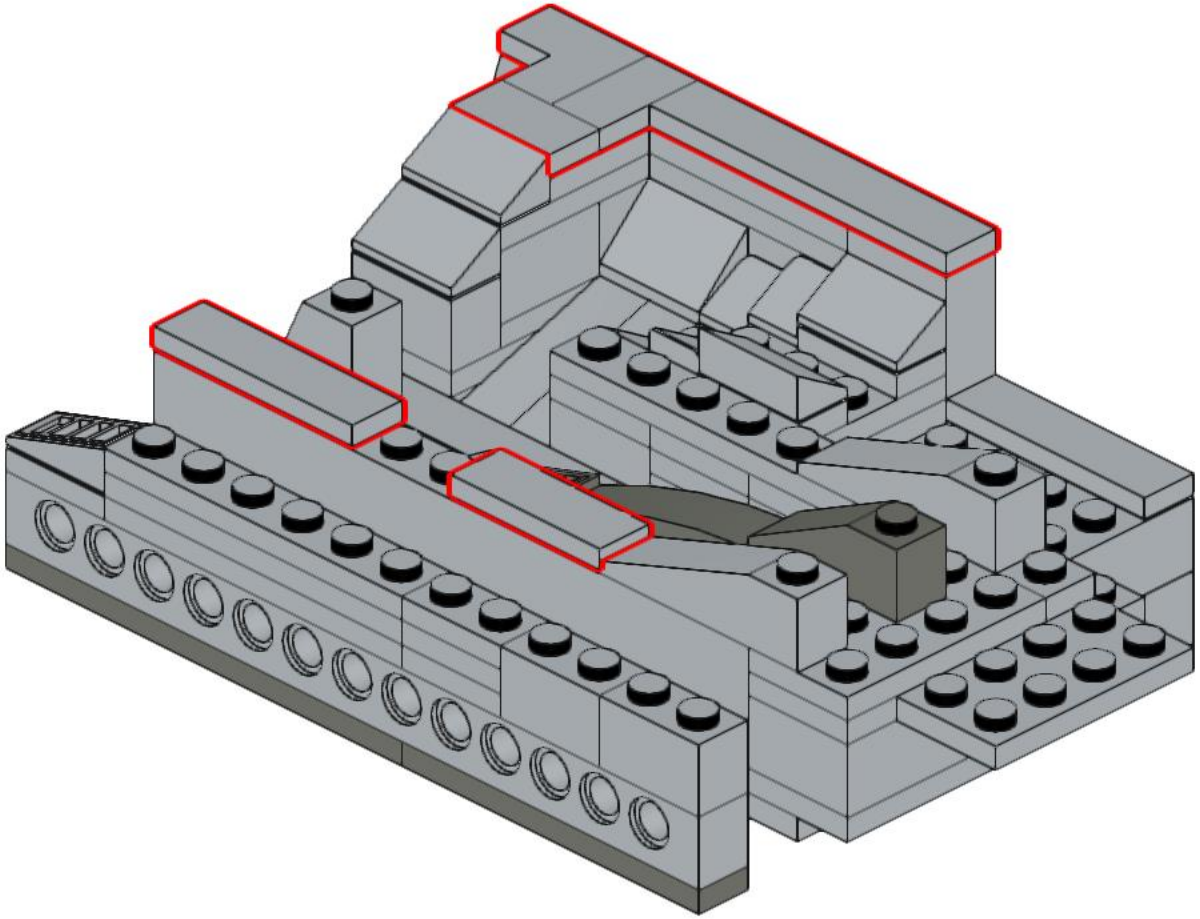

73

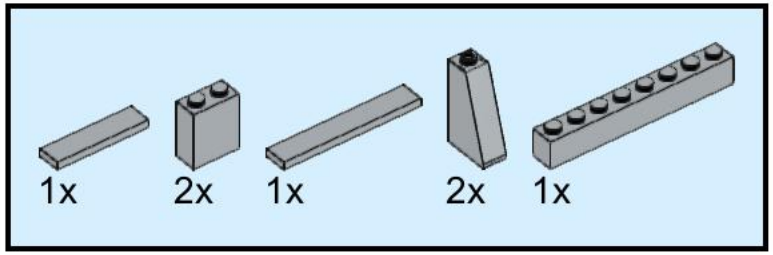

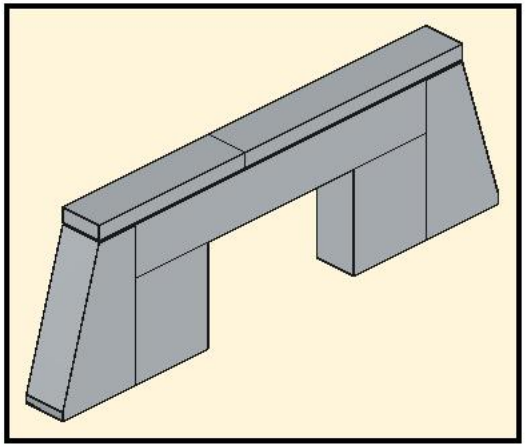

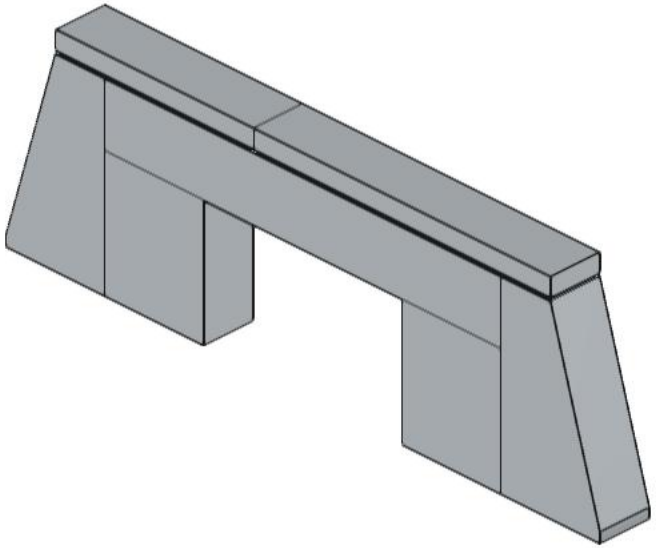

74

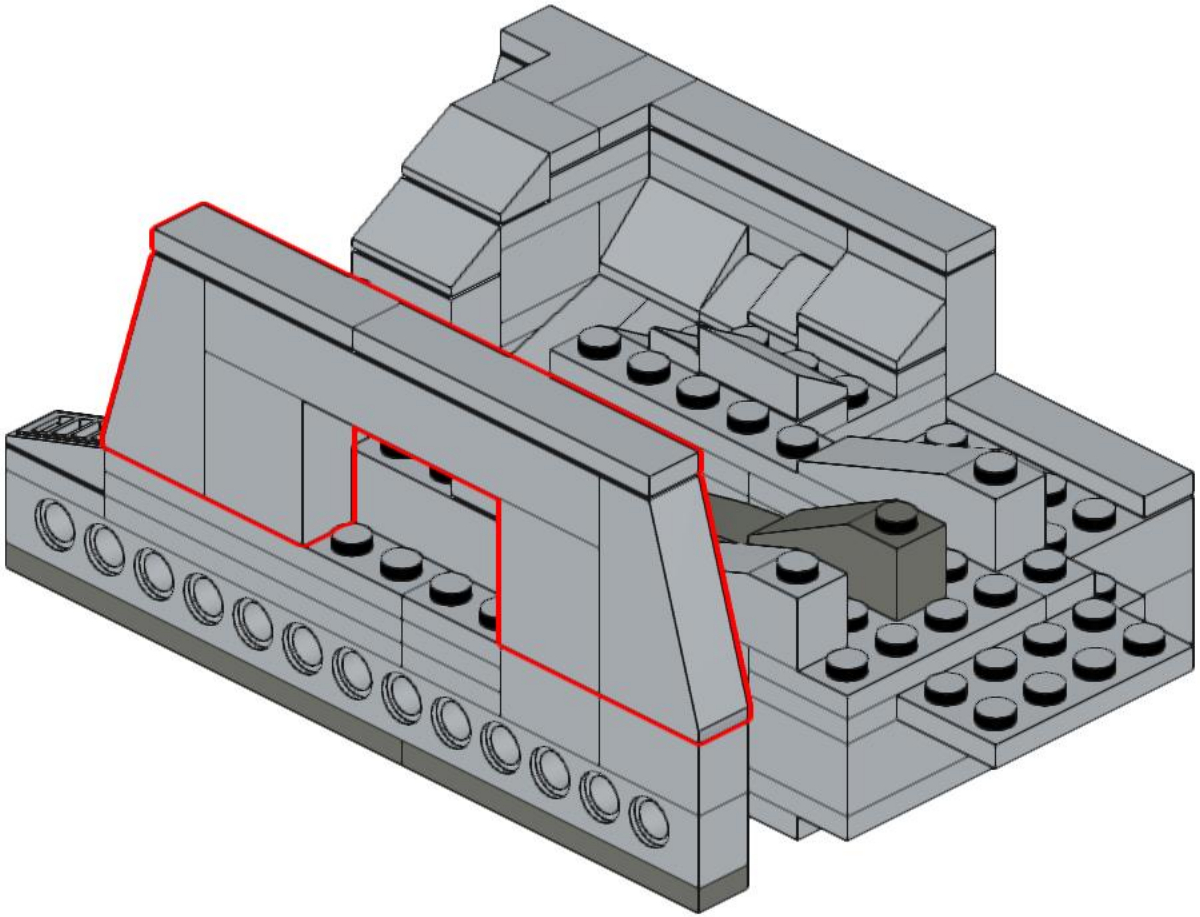

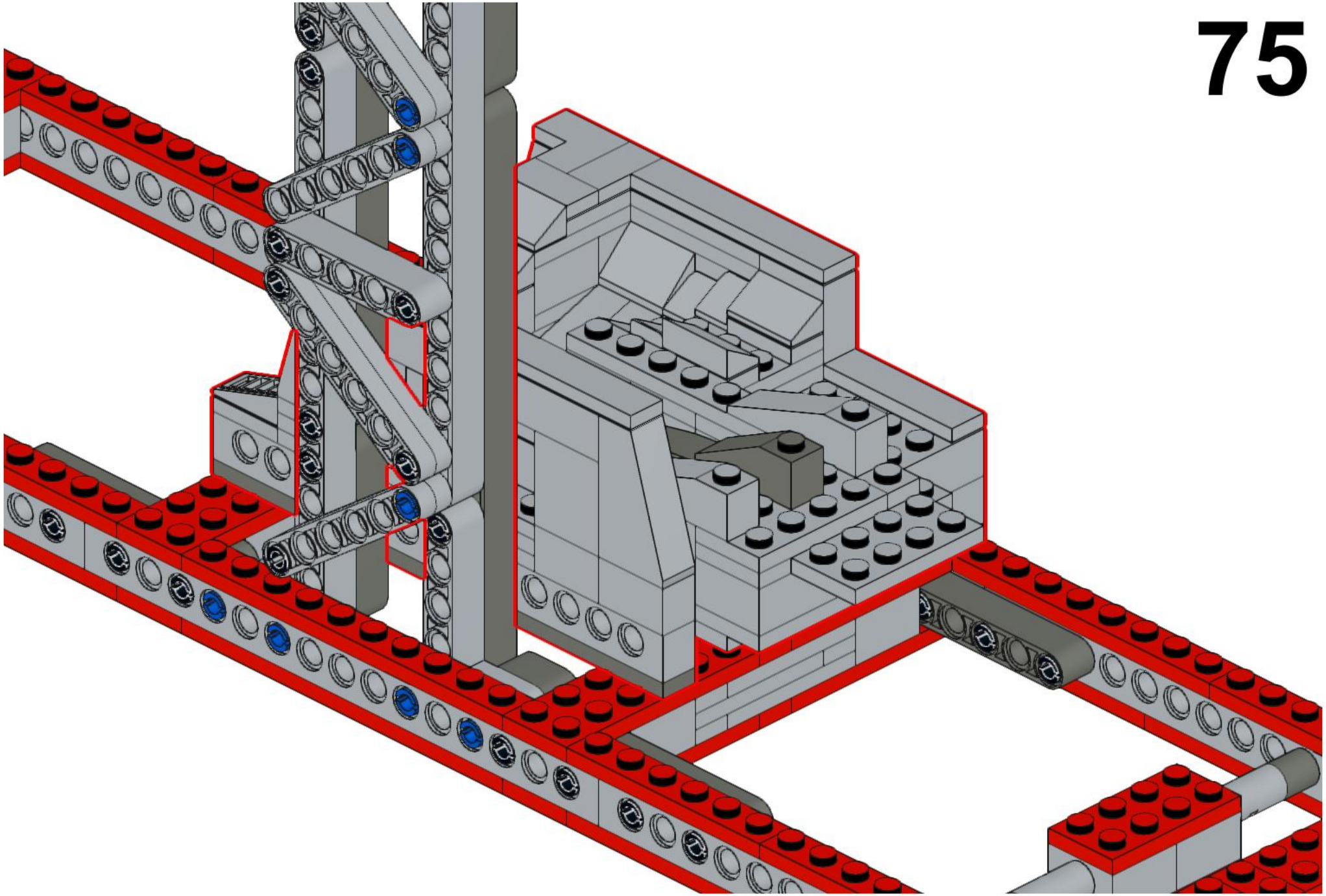

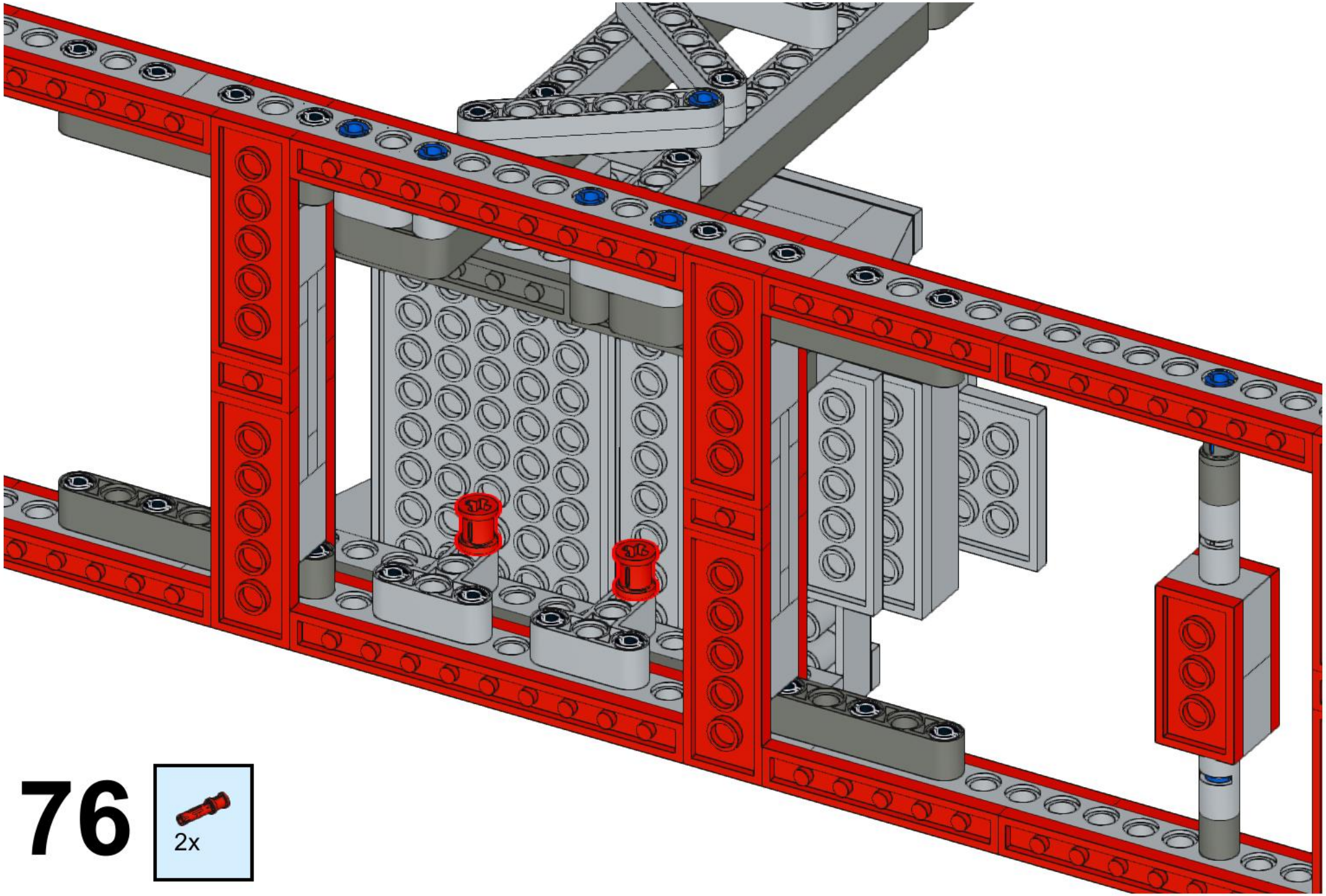

76

77

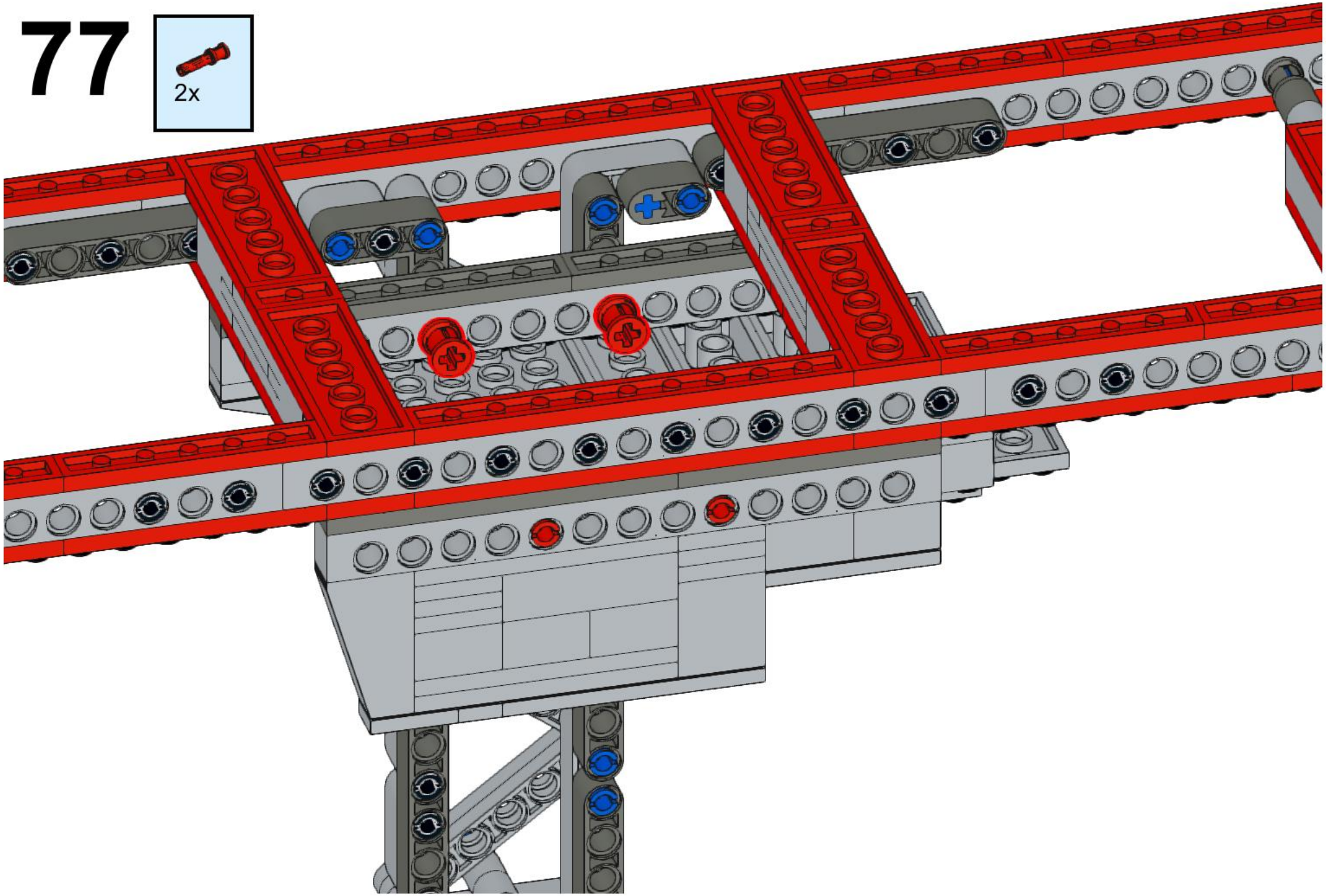

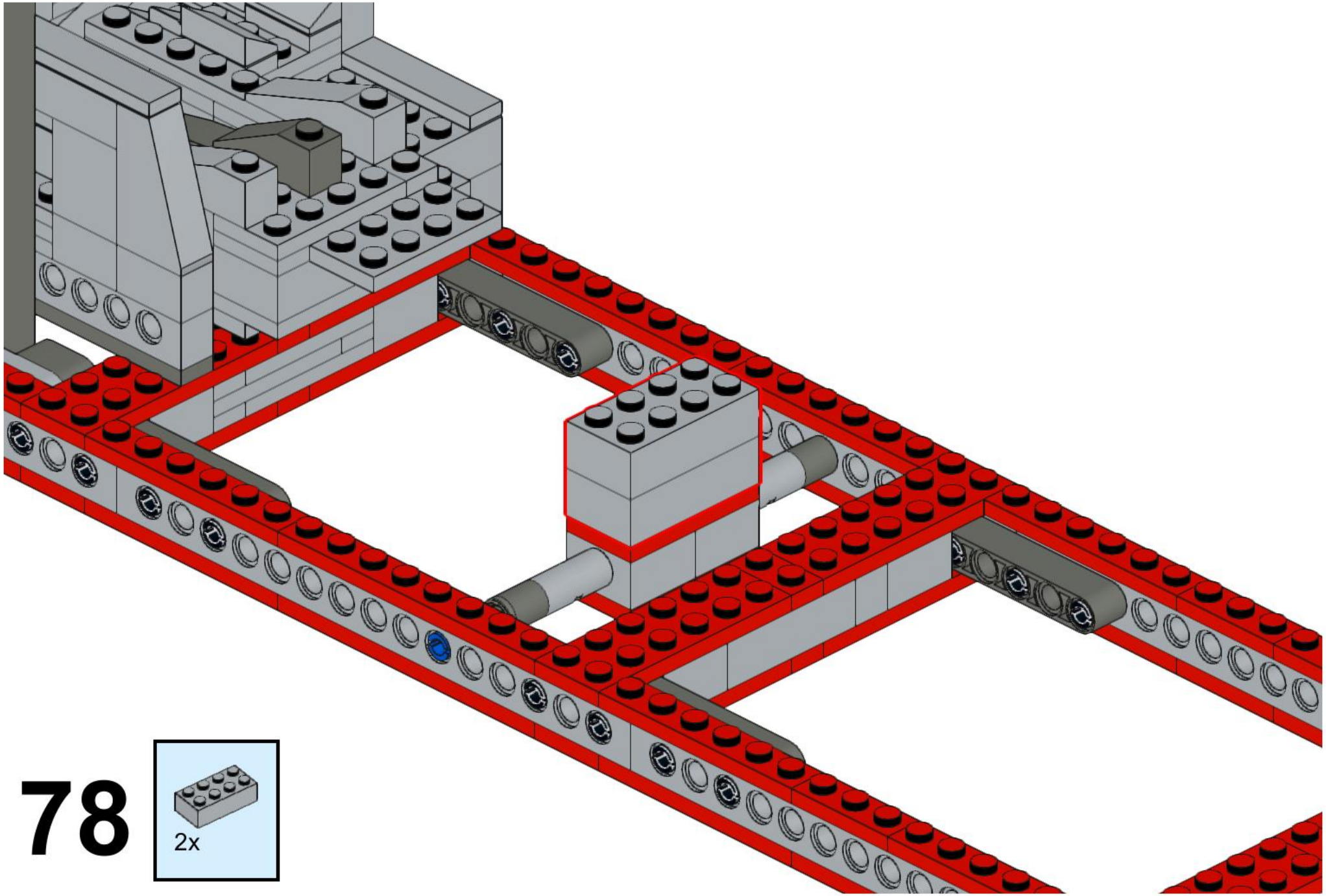

78

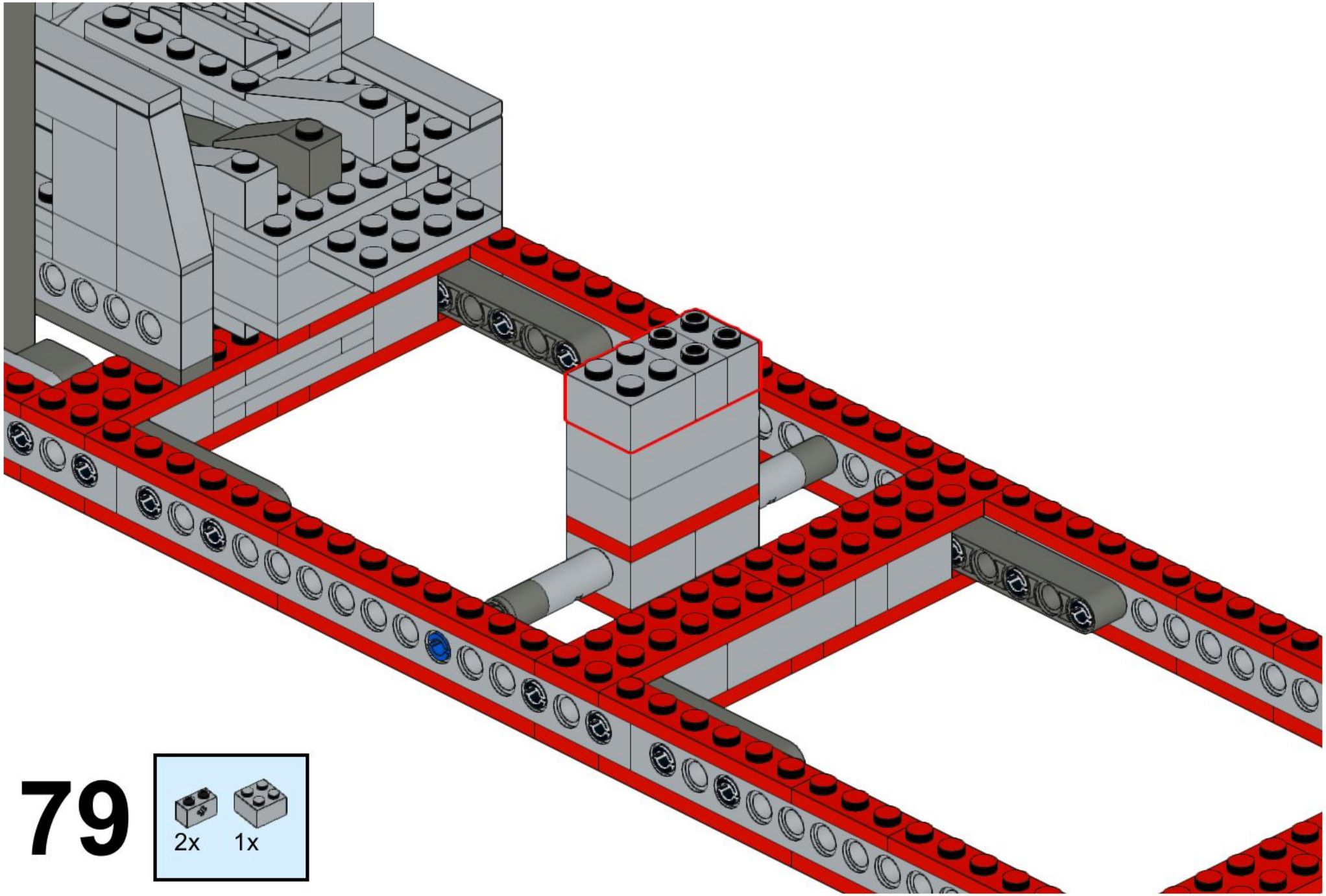

79

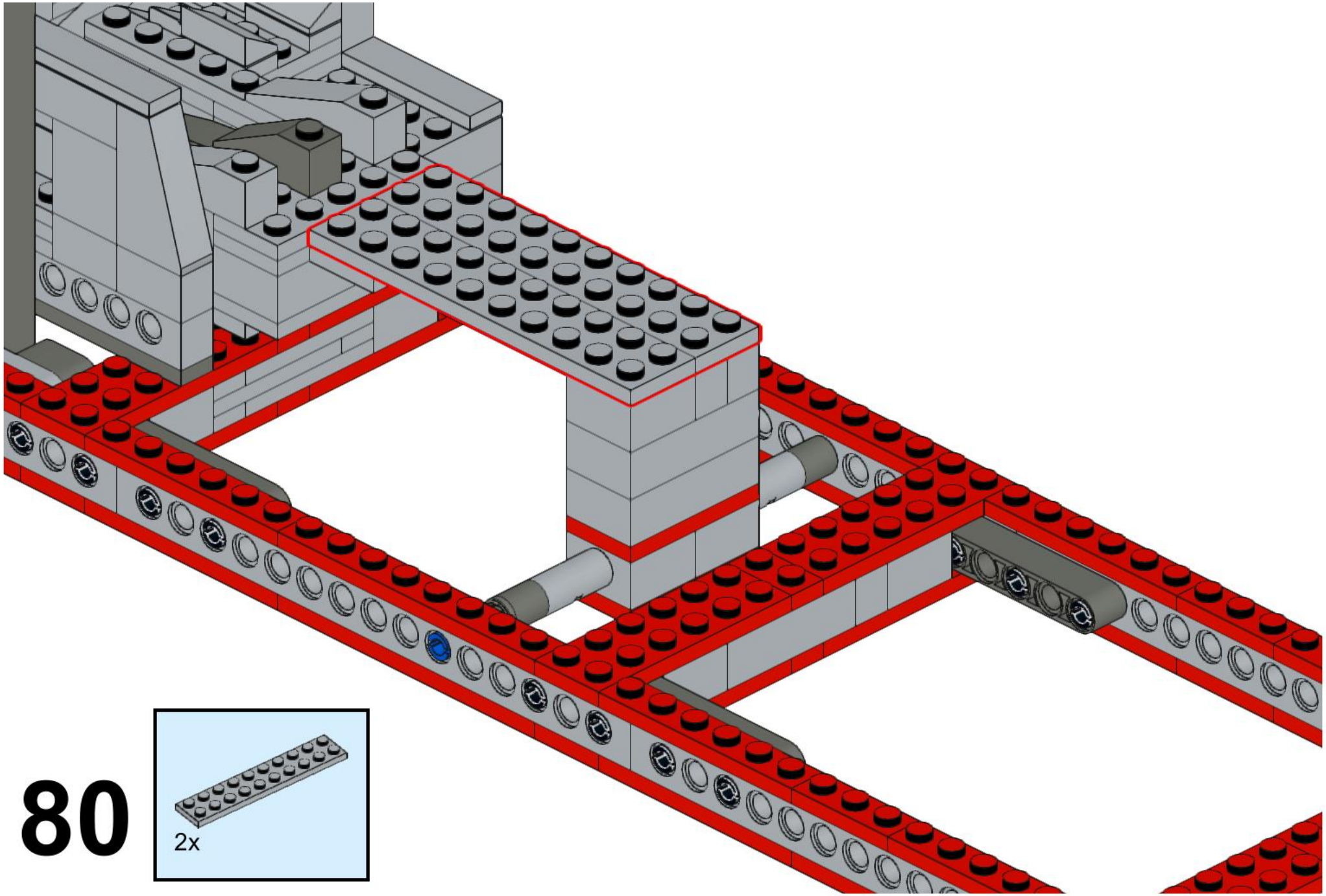

80

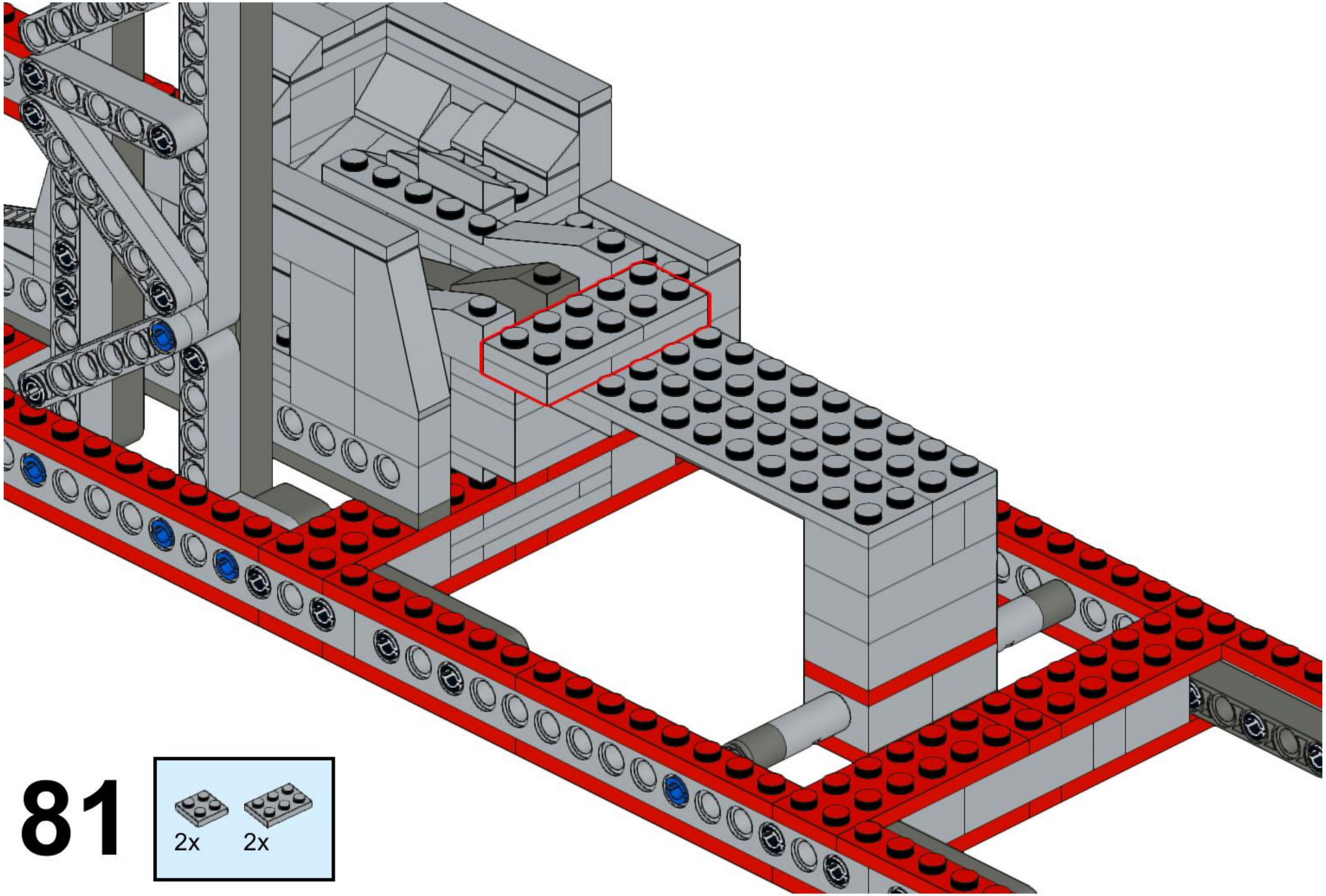

81

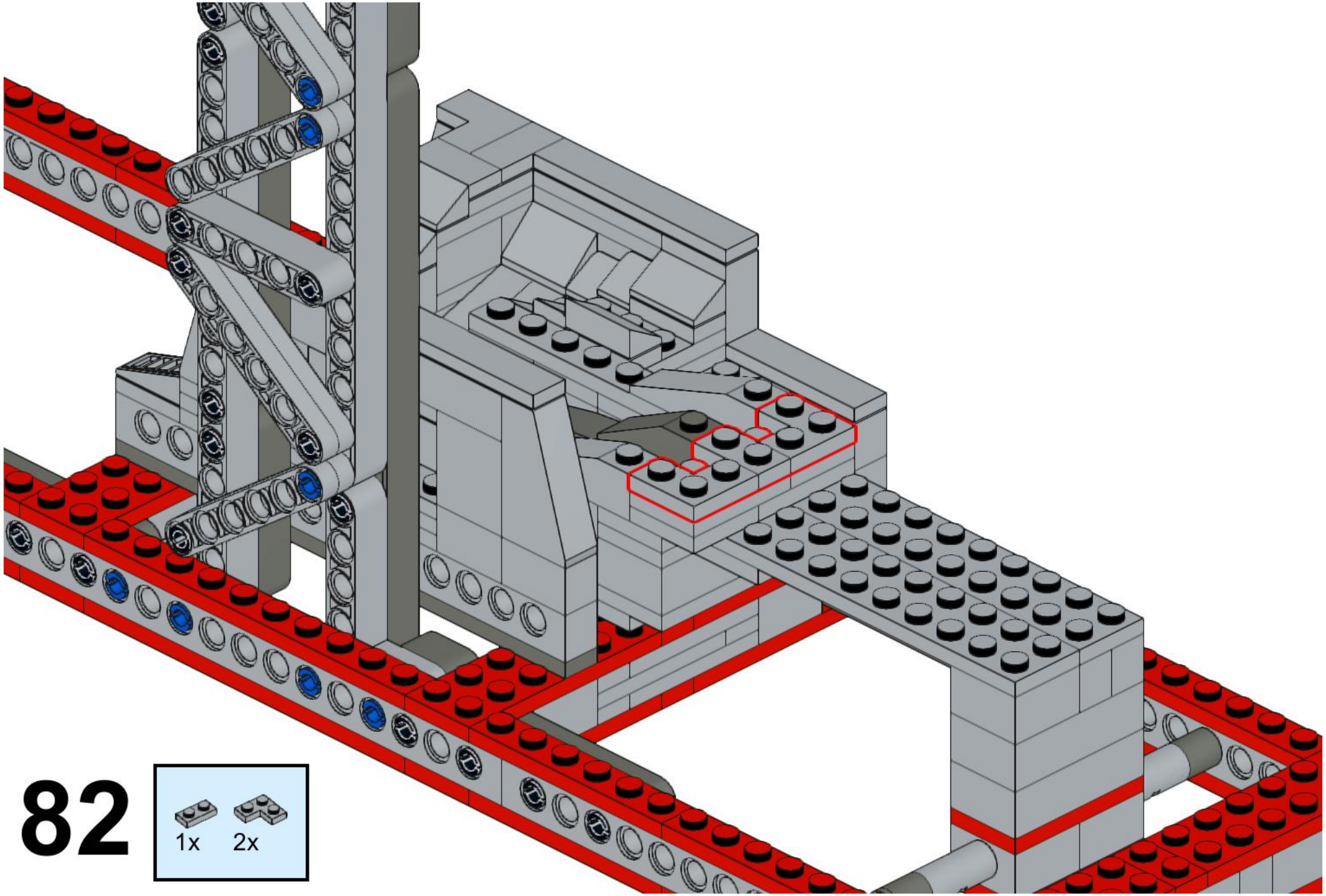

82

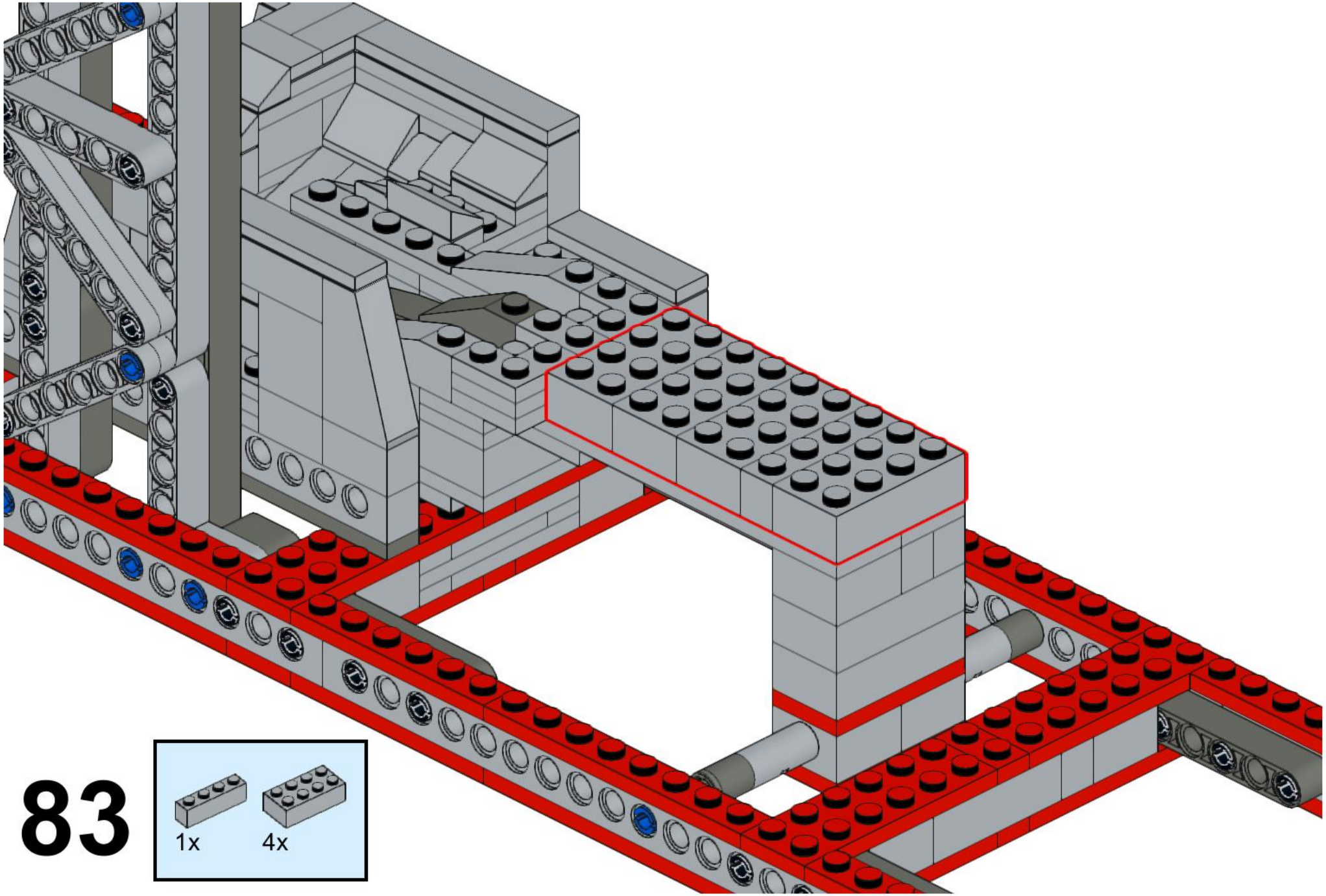

83

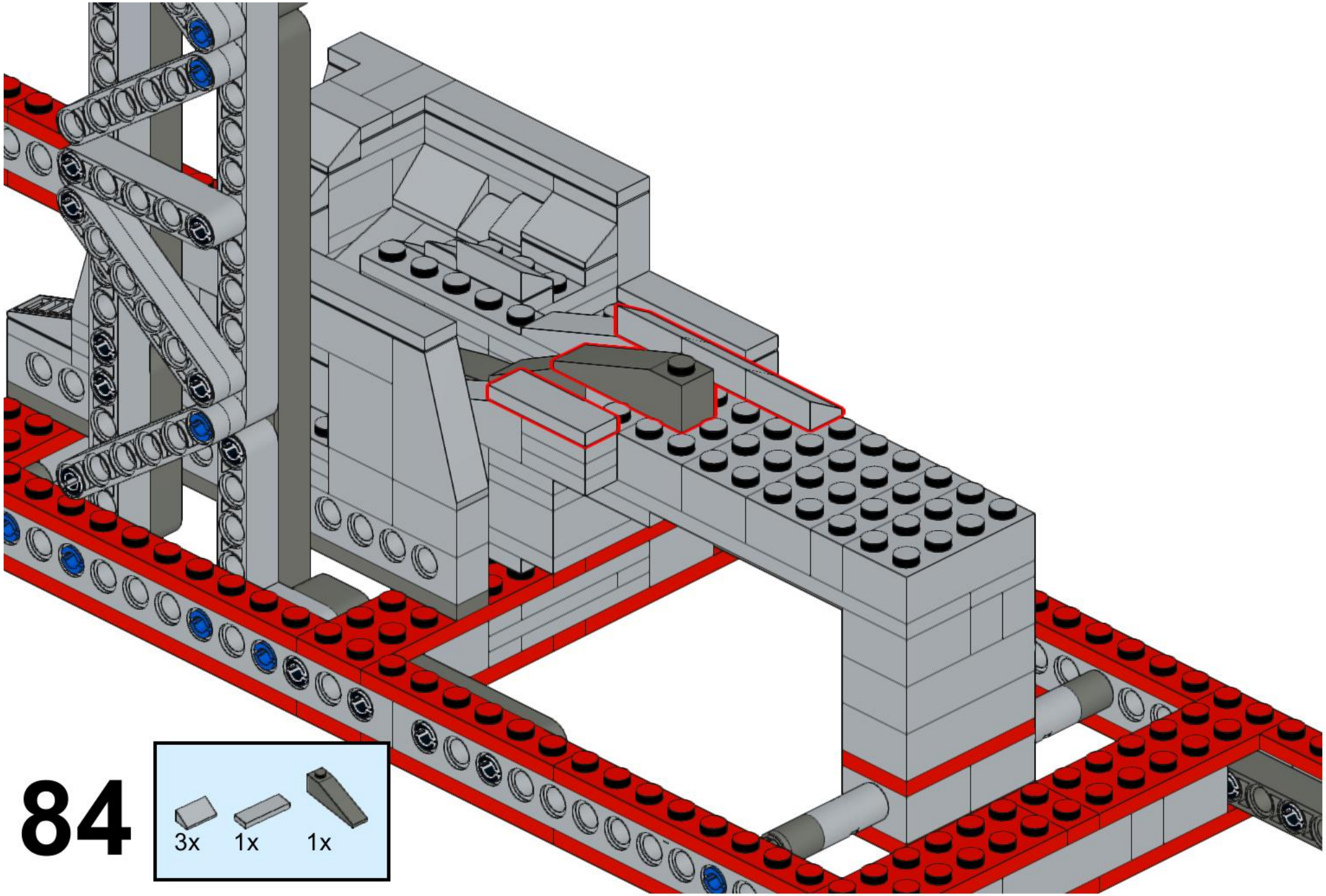
84
3x
1x
1x

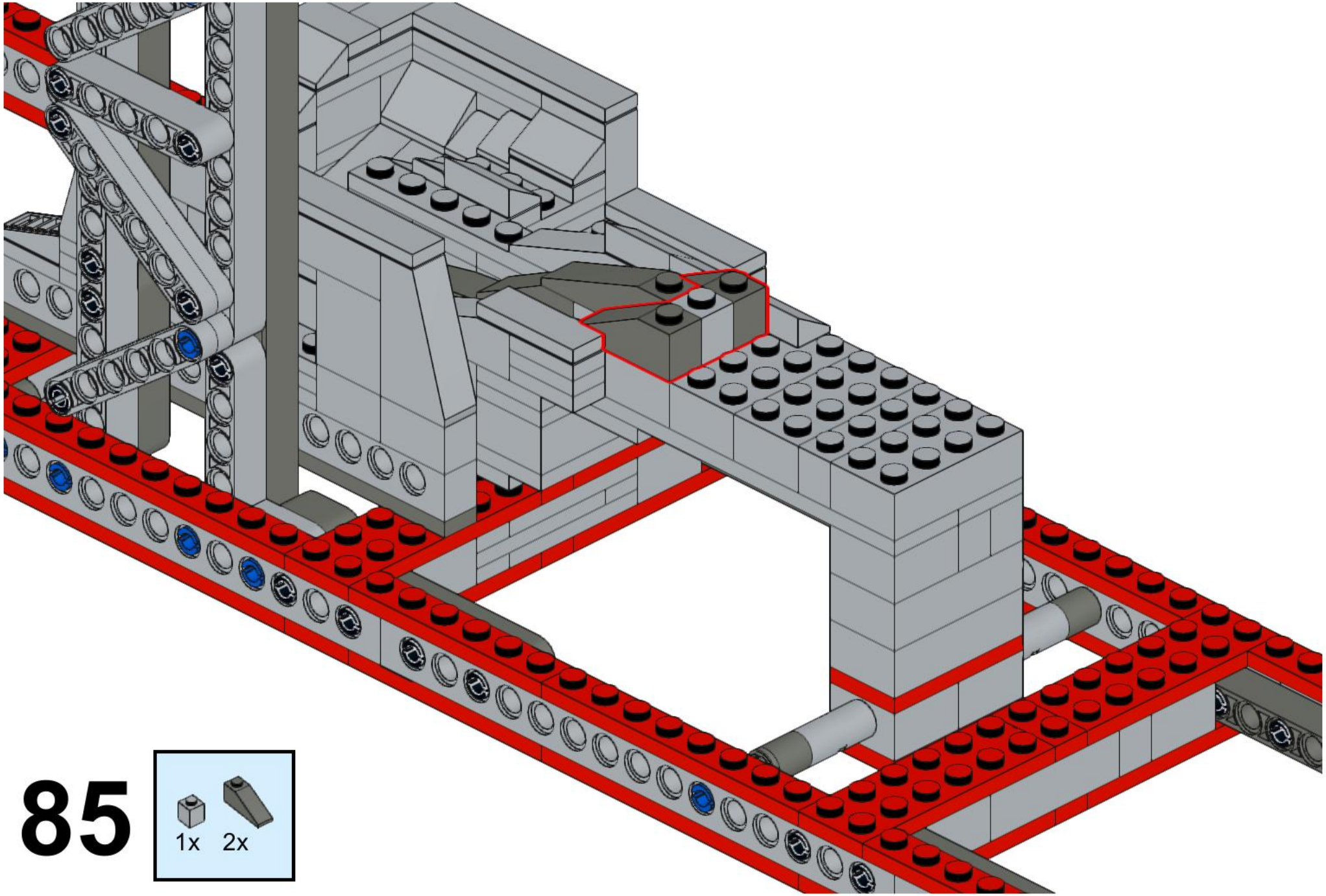

85

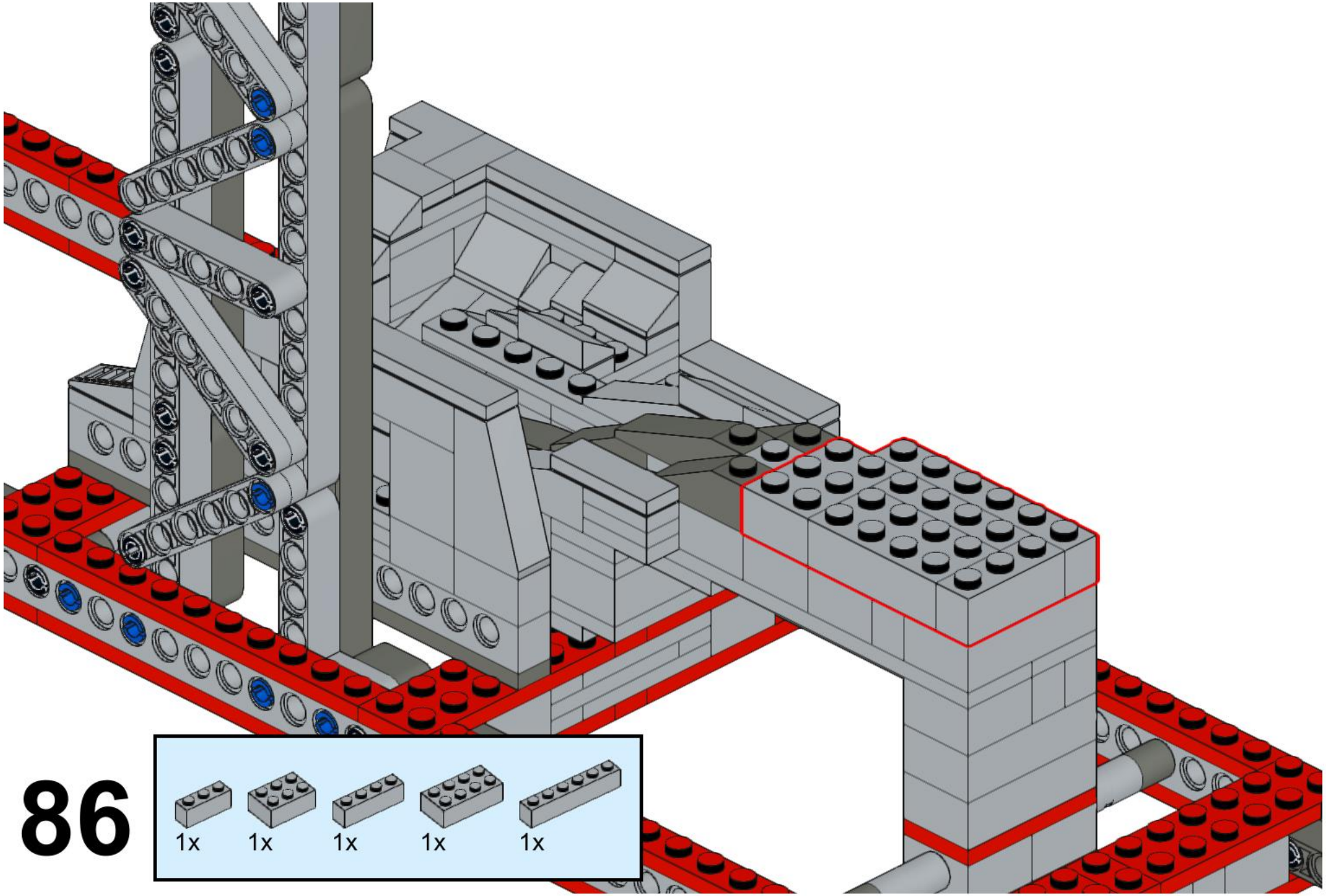
86
1x
1x
1x
1x
1x

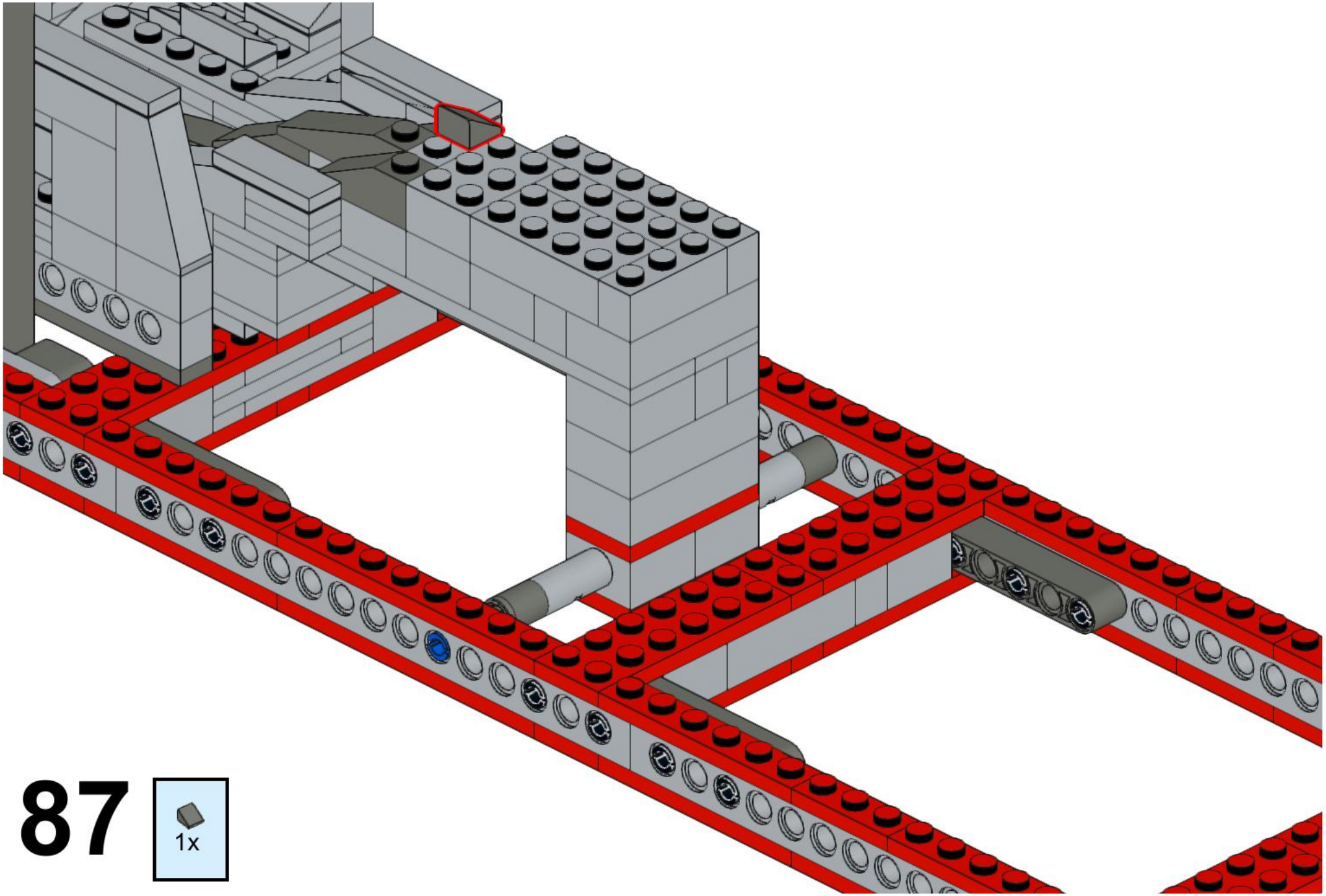

87

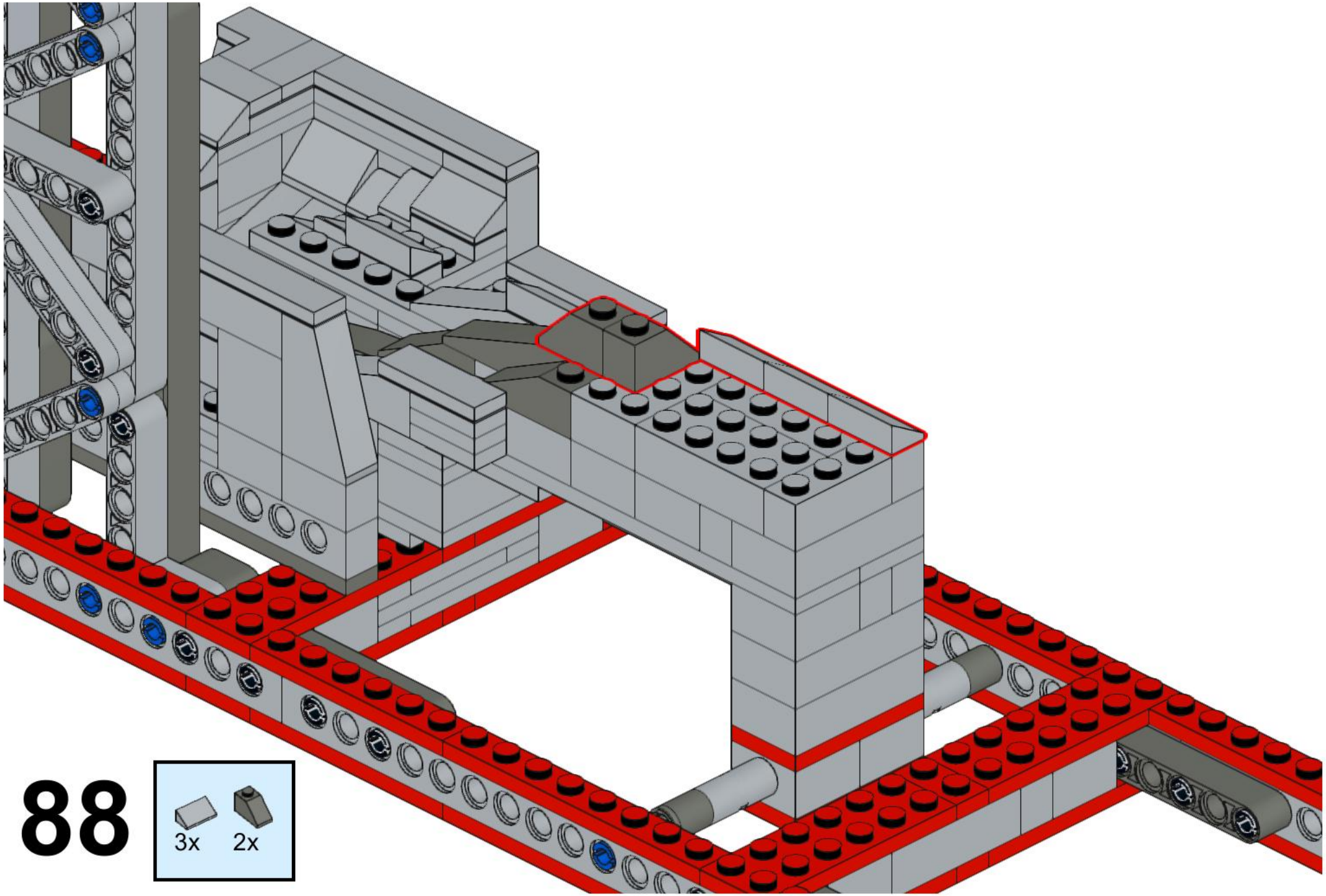

88

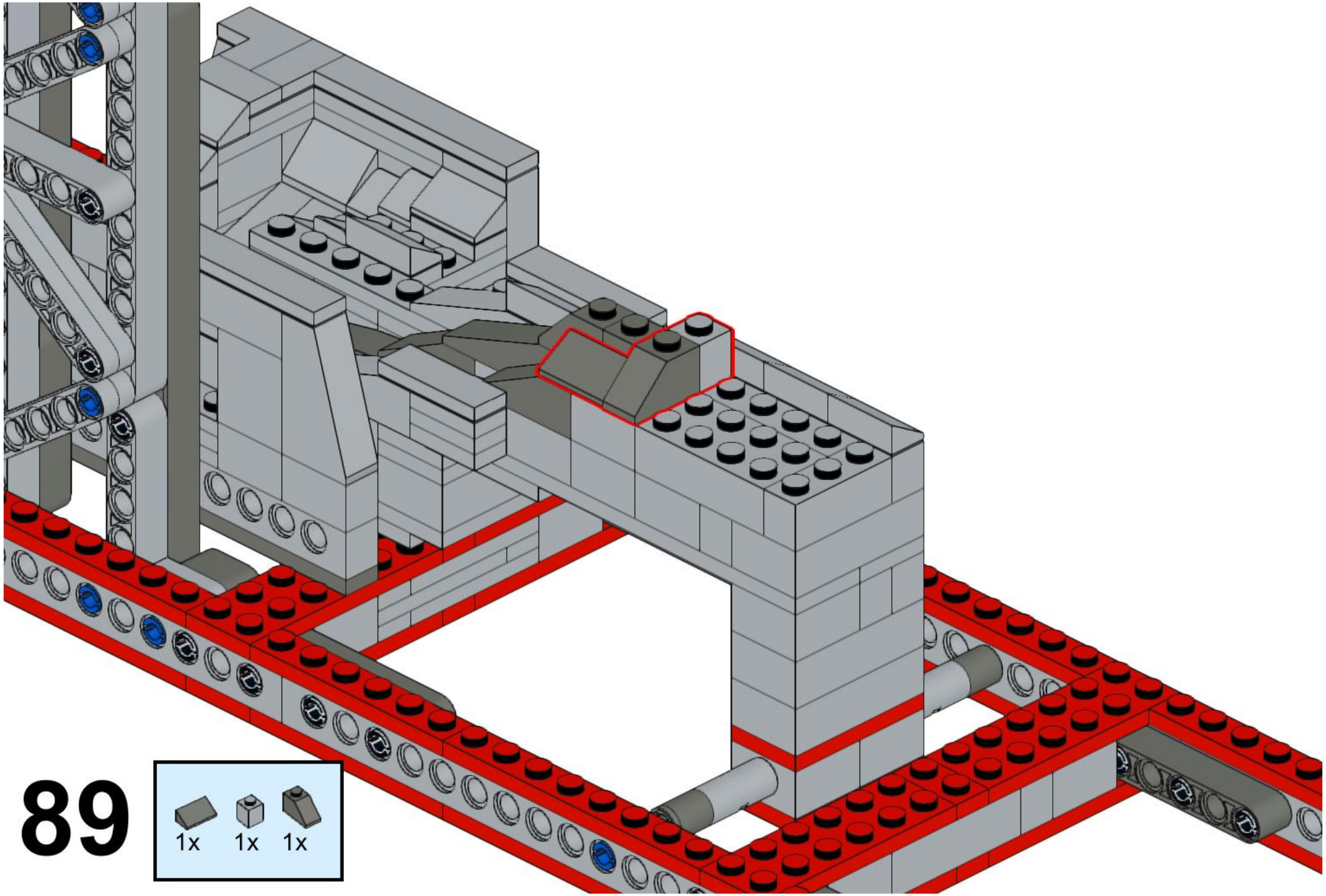

89

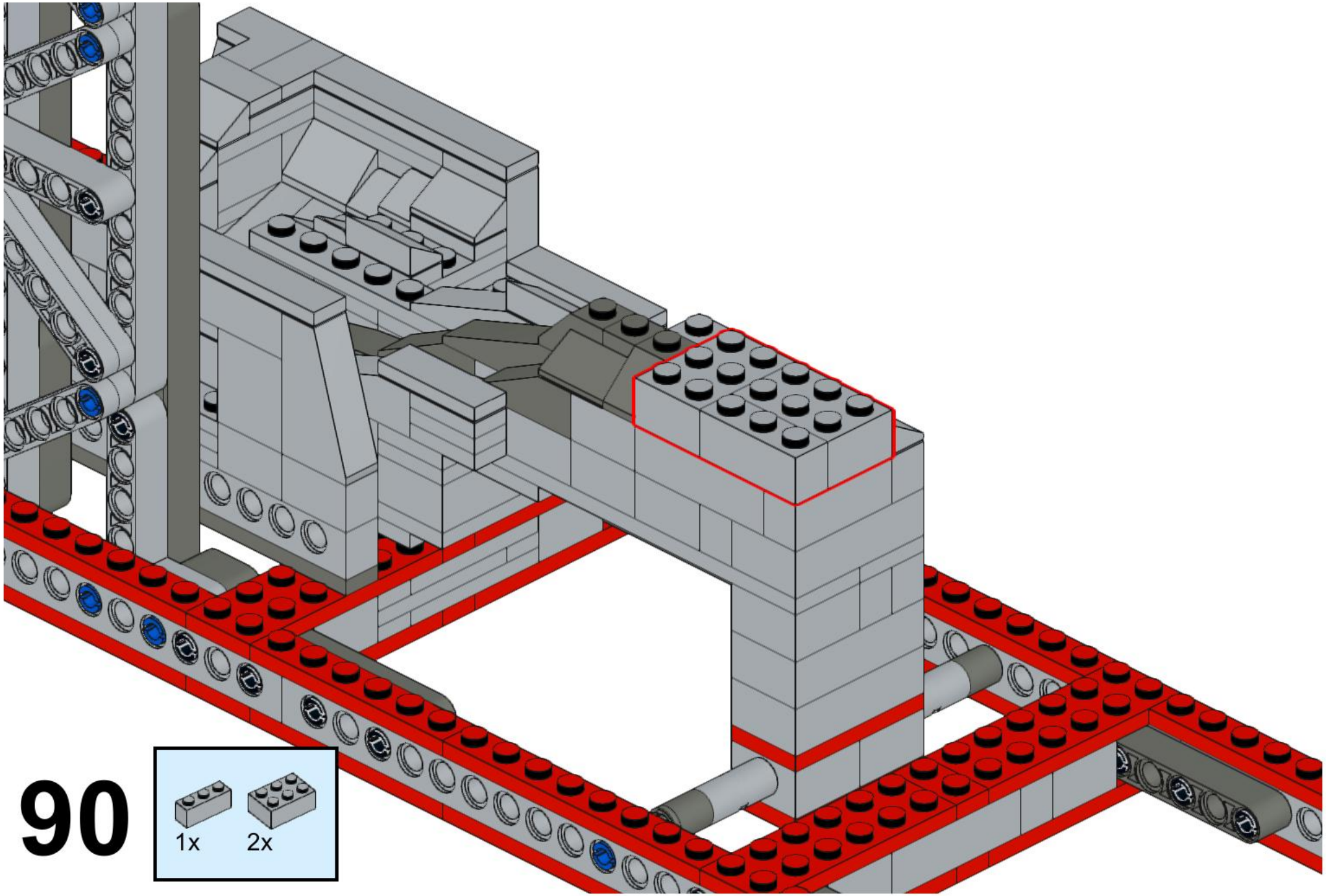
90
1x
2x

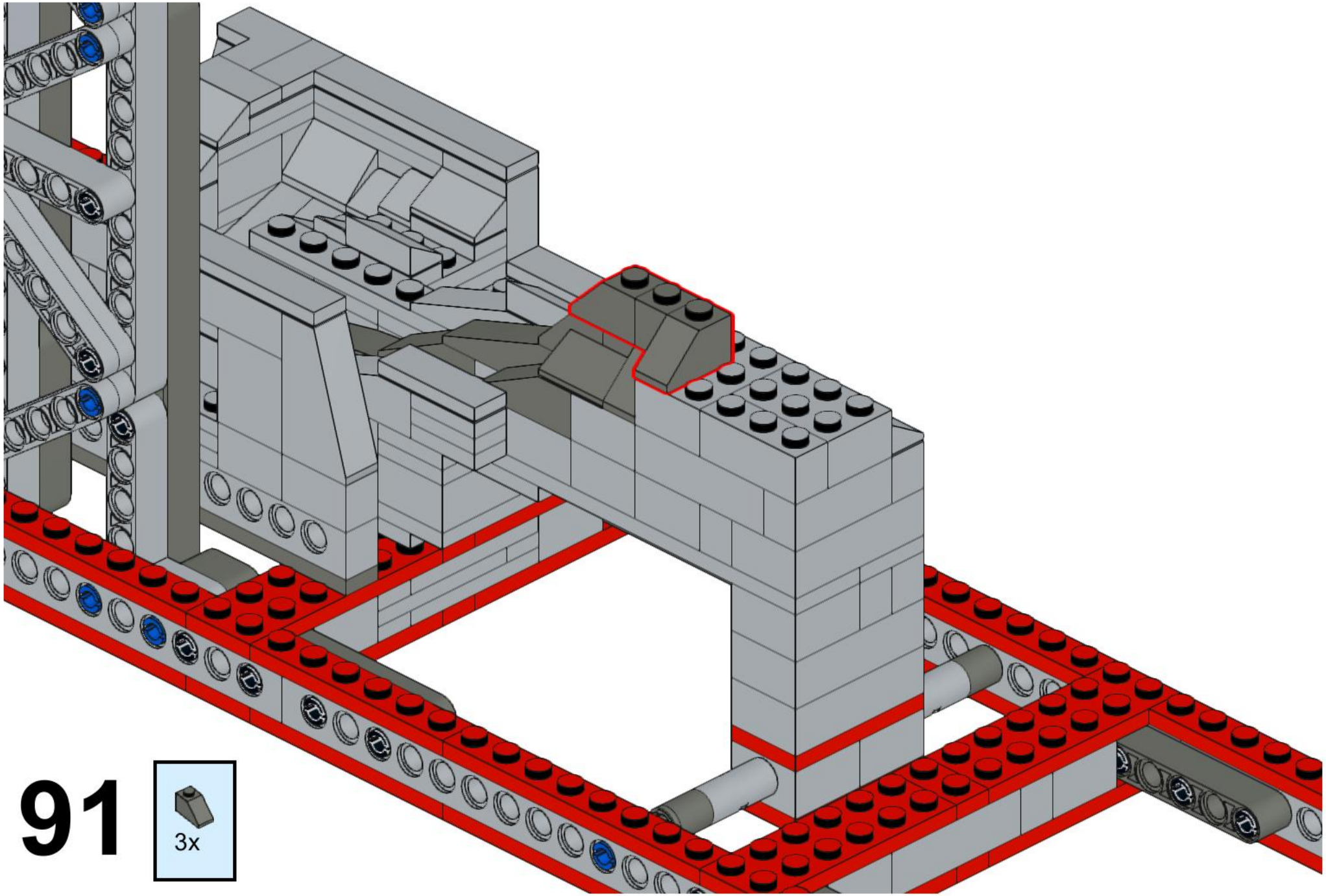

91

3x

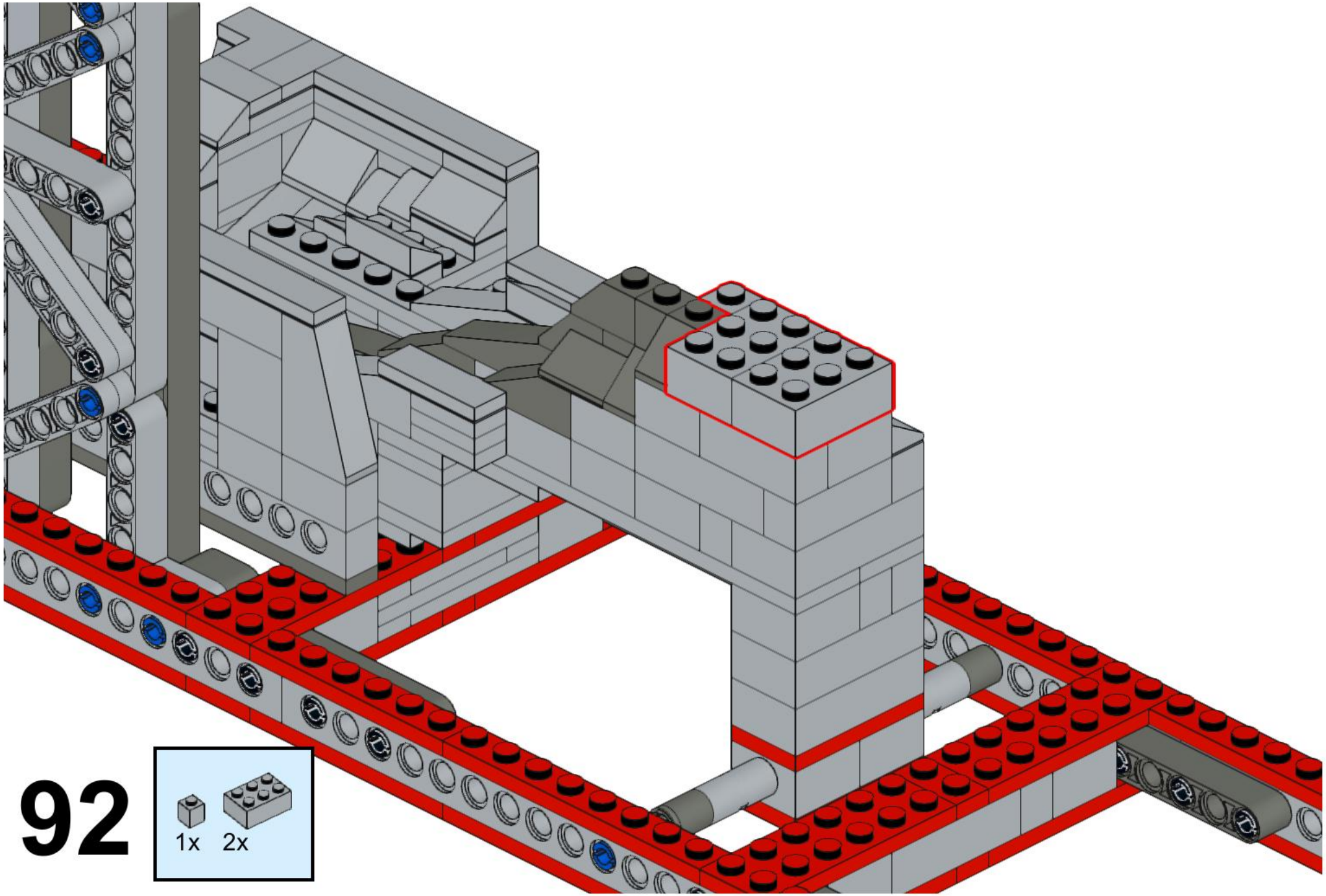

92

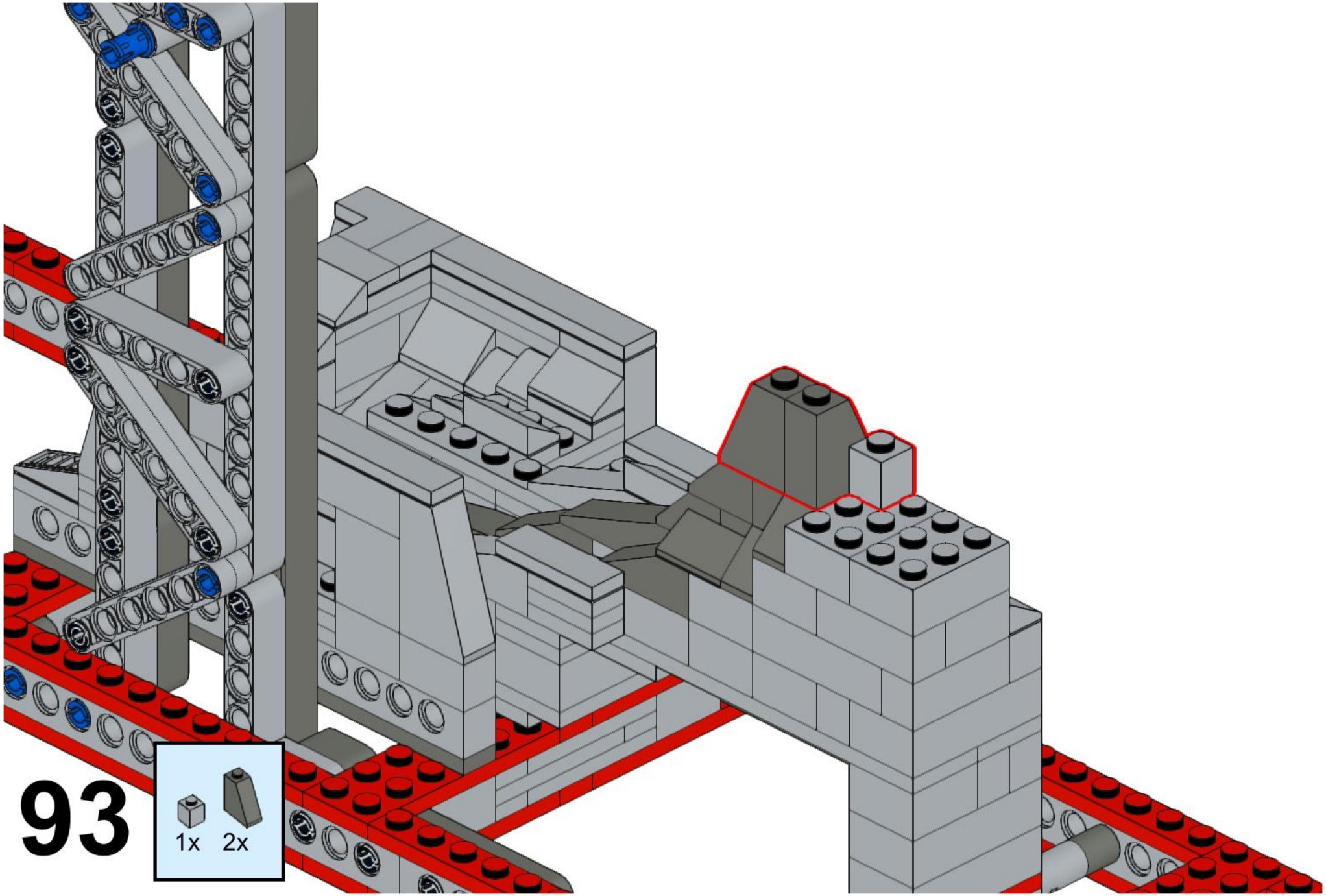
93
1x
2x

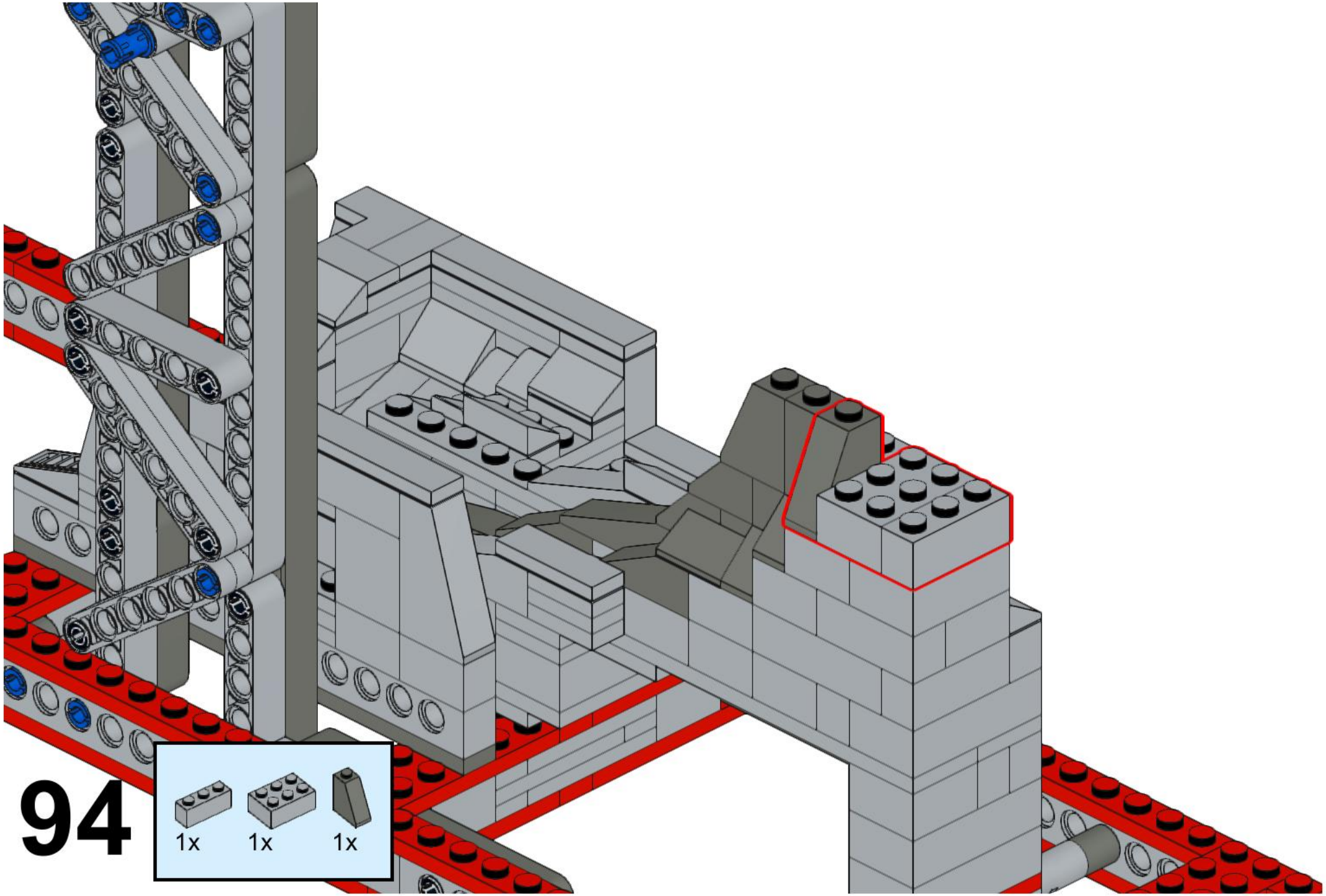
94
1x
1x
1x

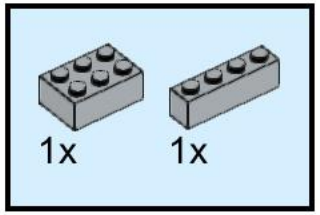

95

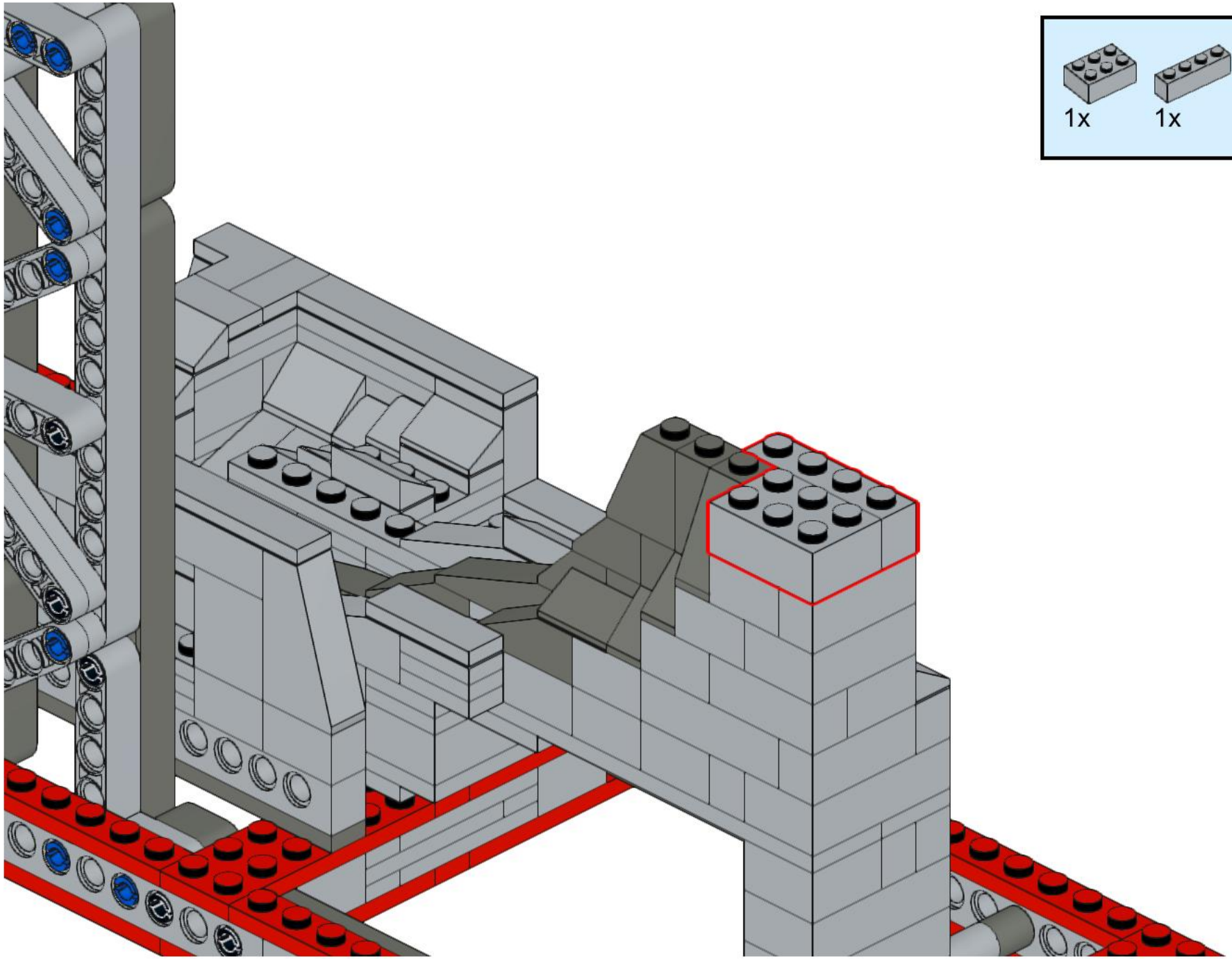

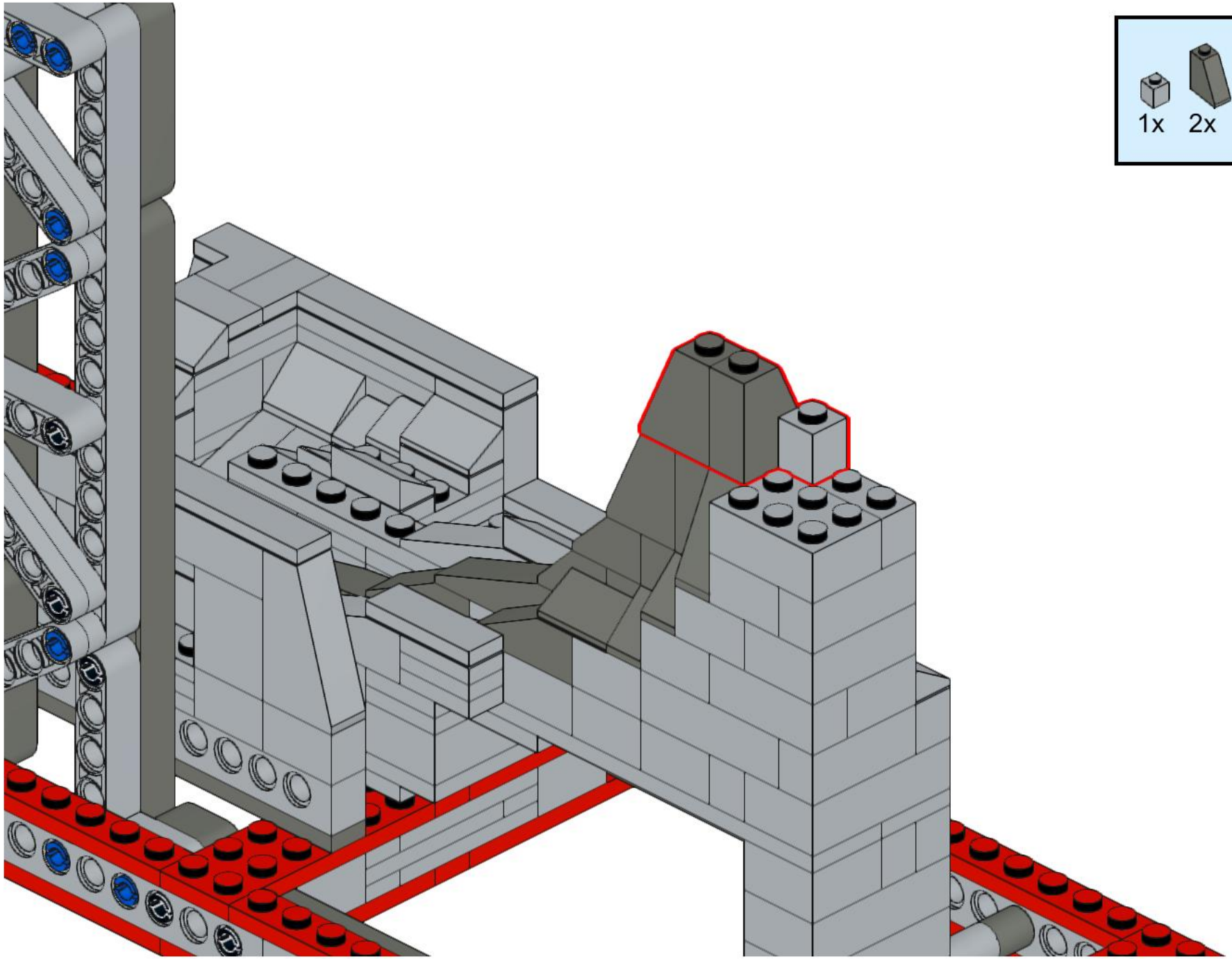

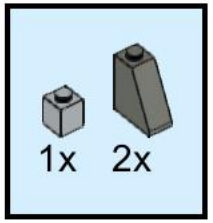

96

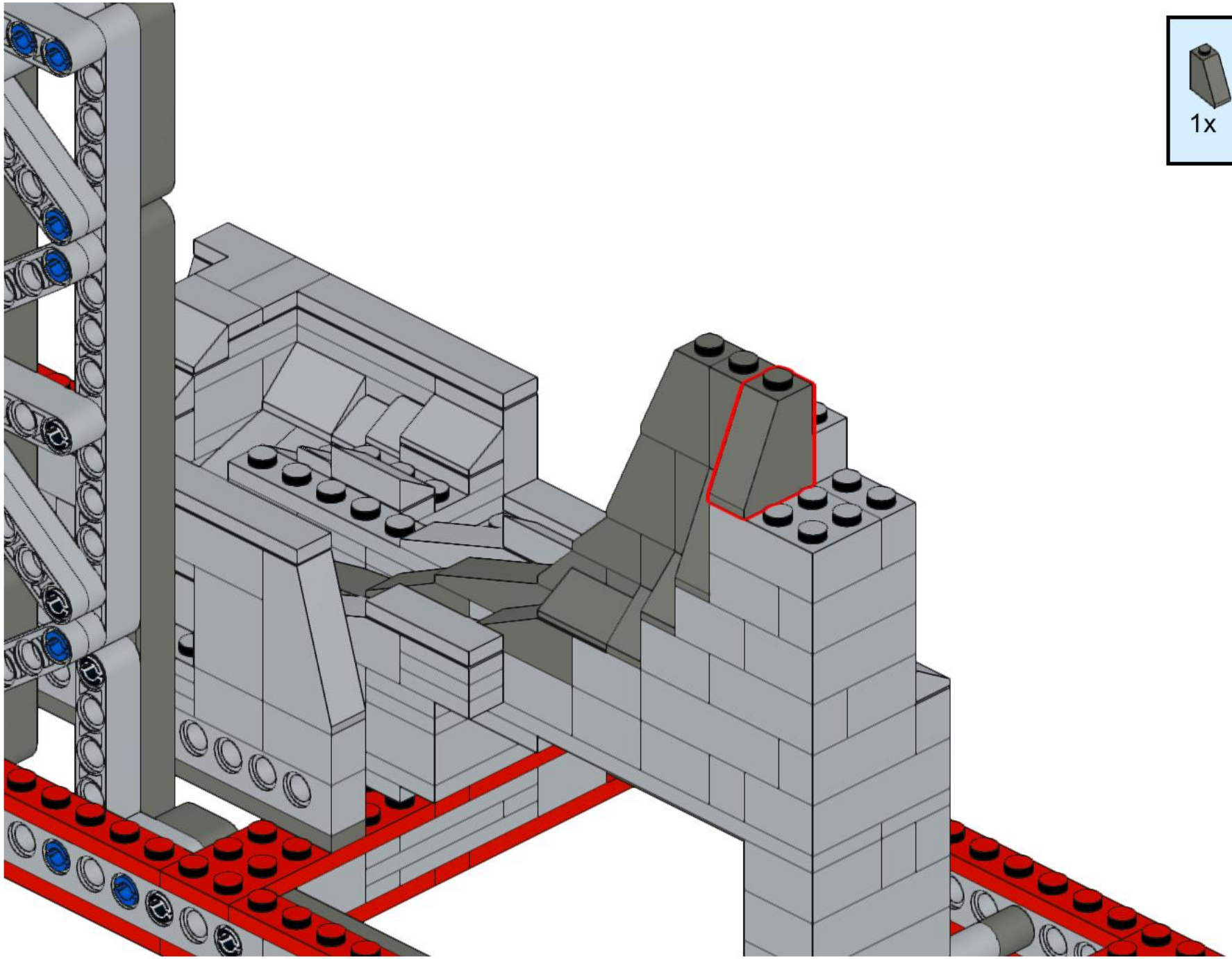

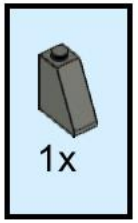

97

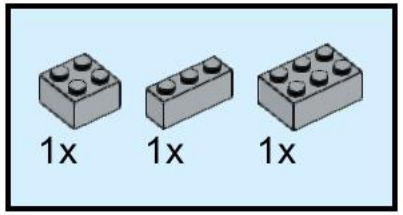

98

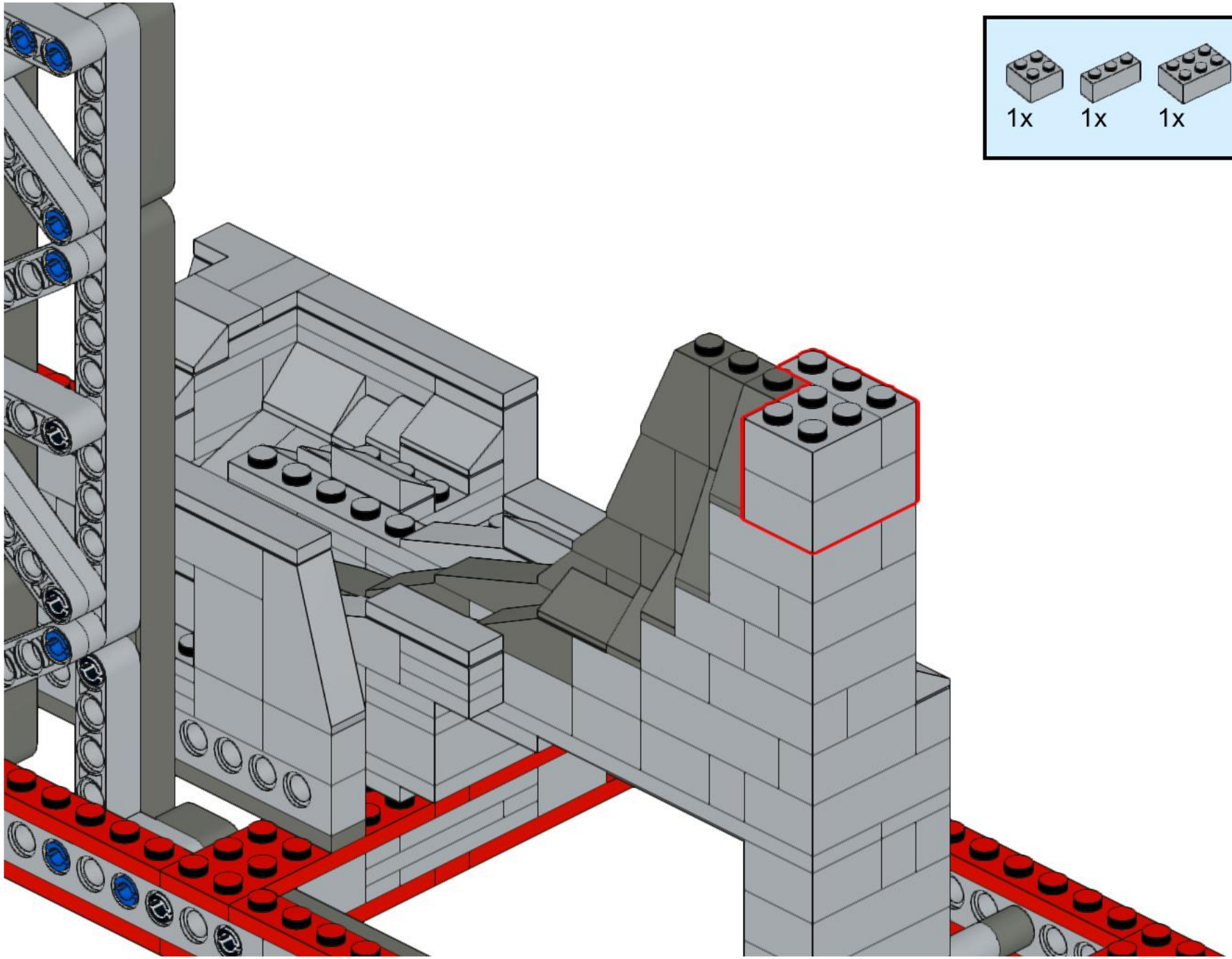

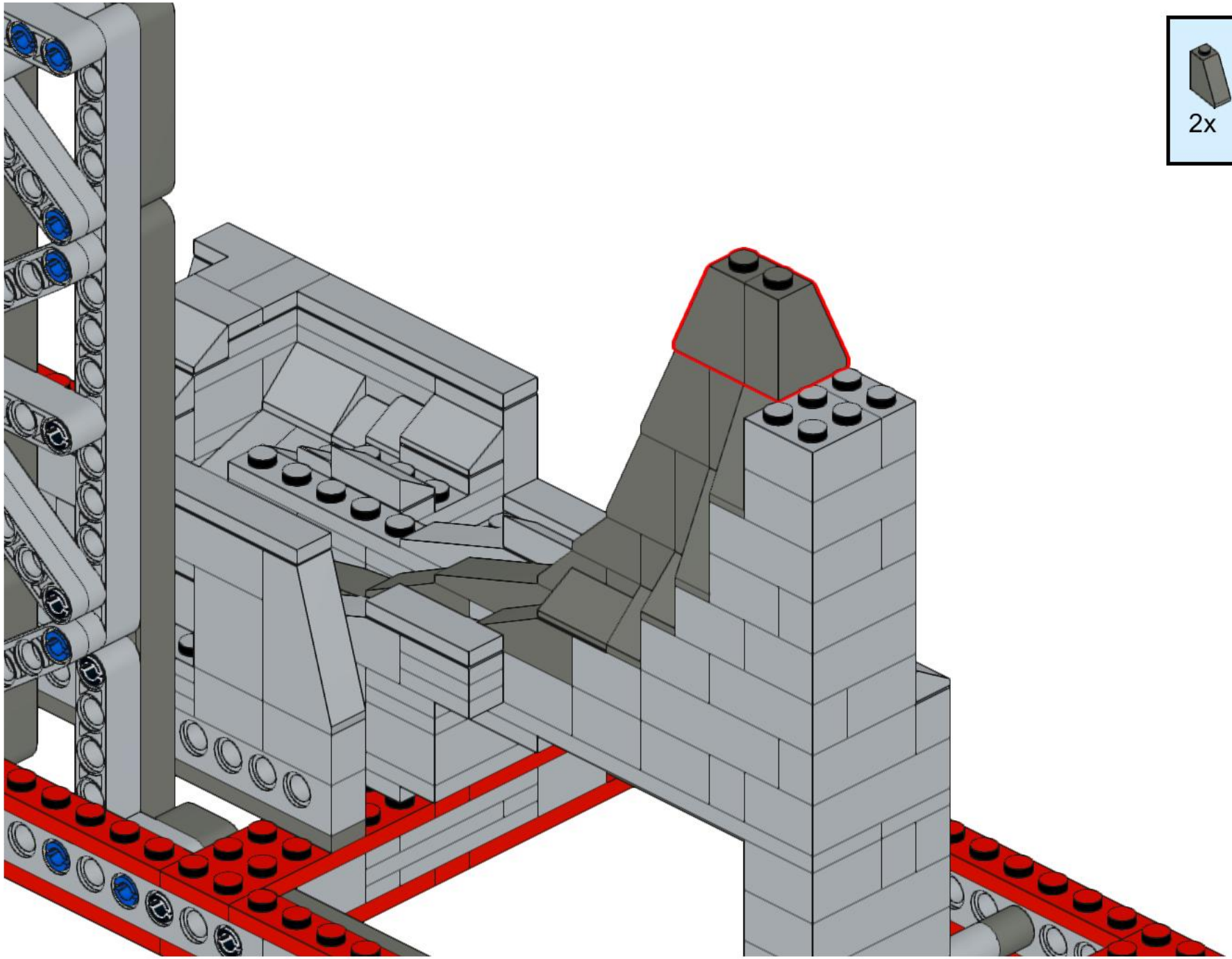

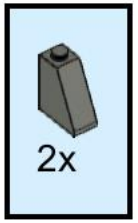

99

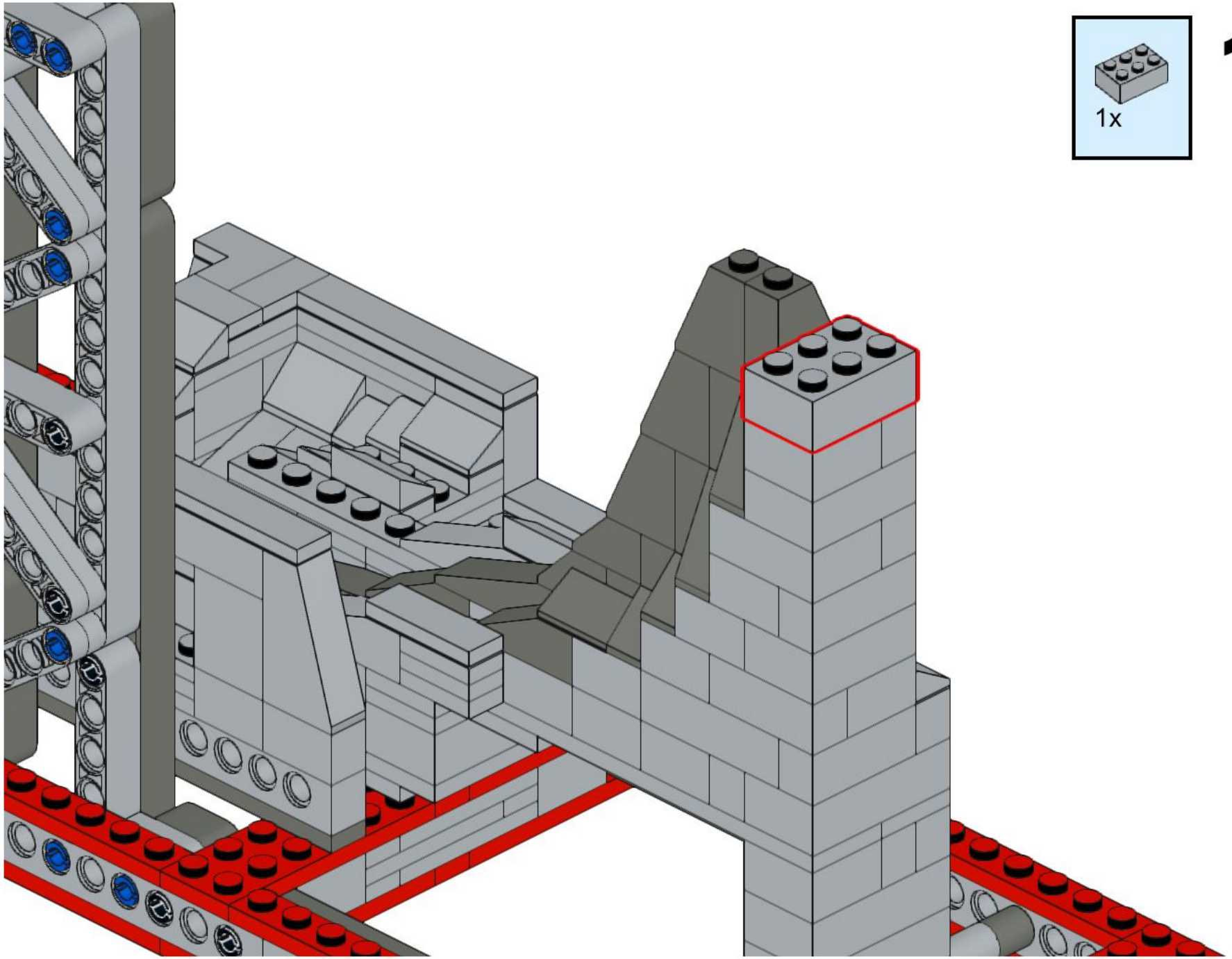

100

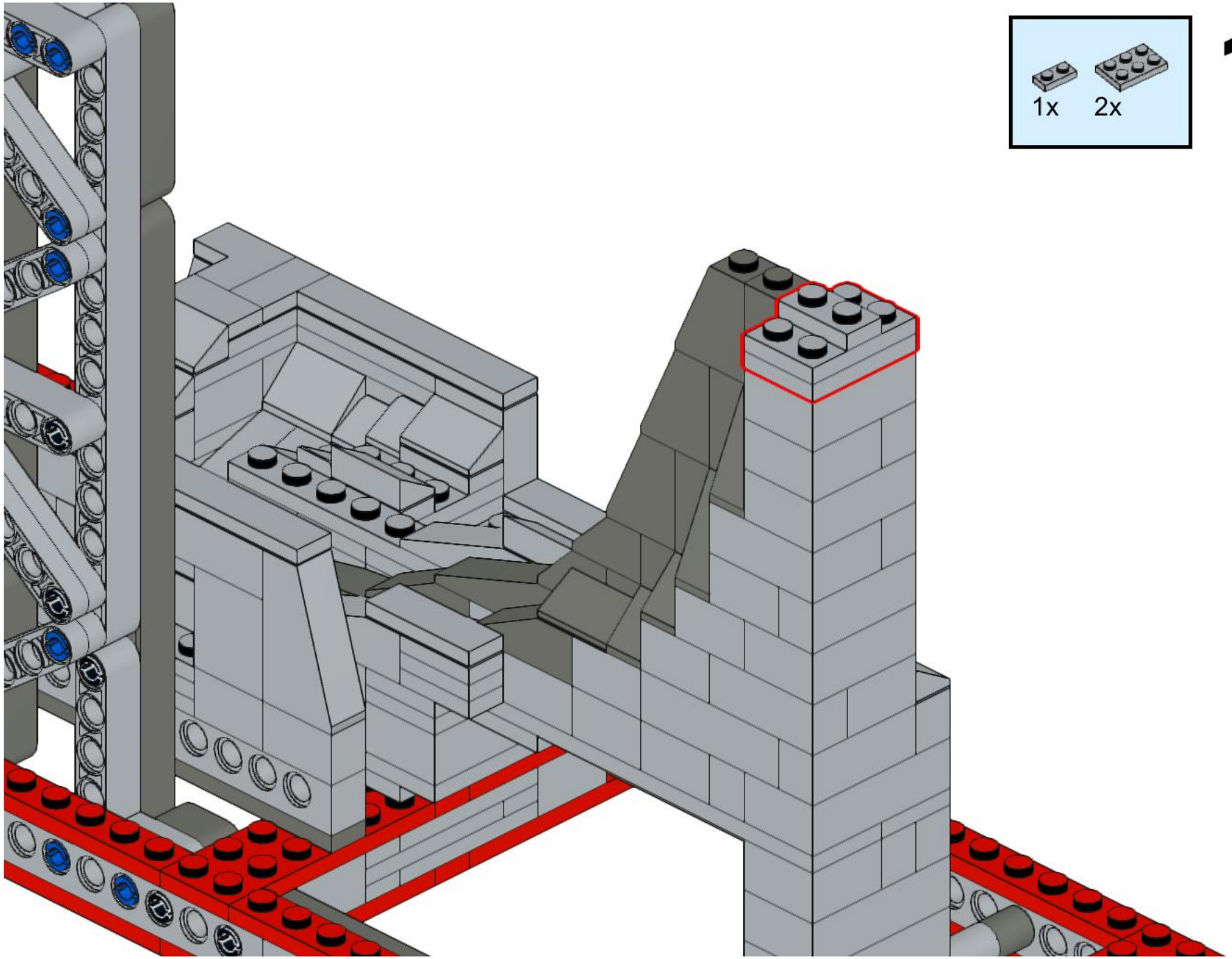

101

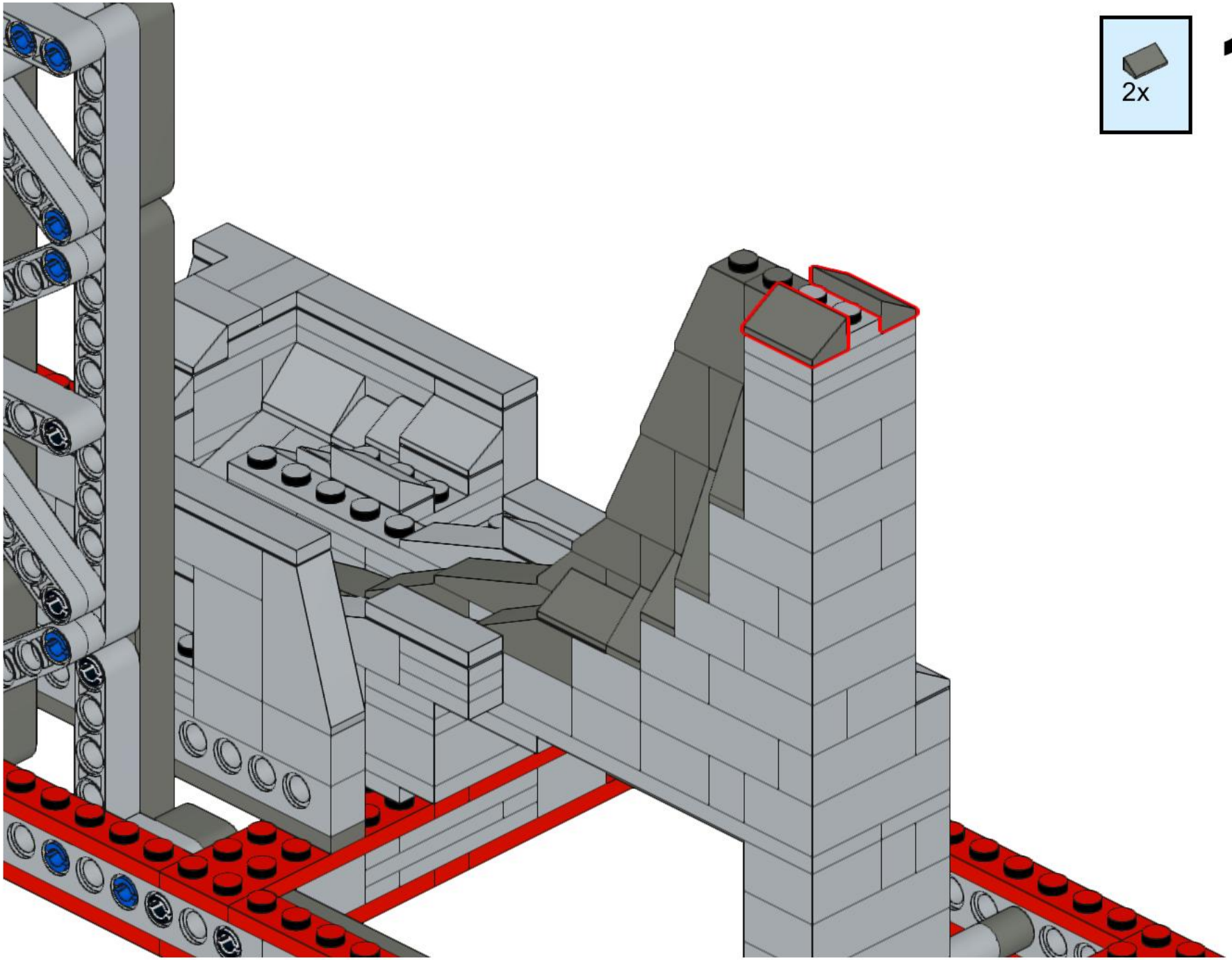

2x

102

103

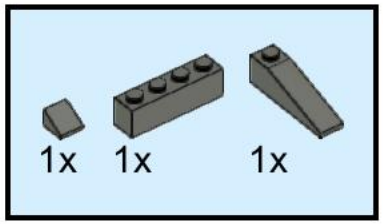

104

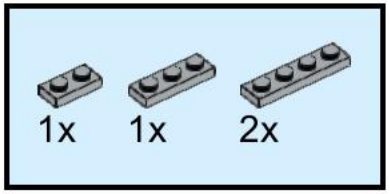

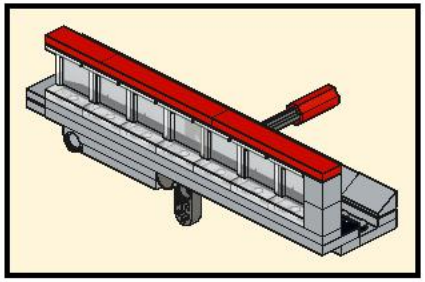

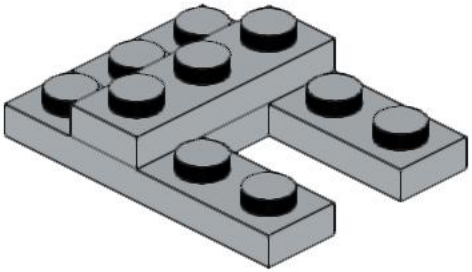

105

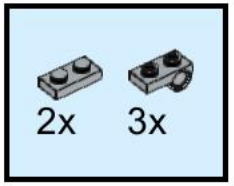

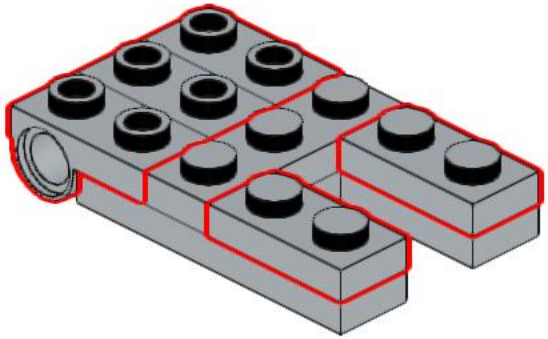

106

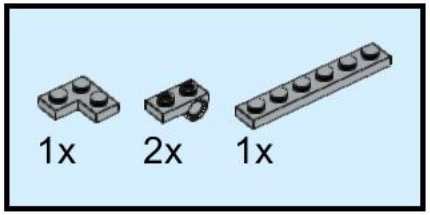

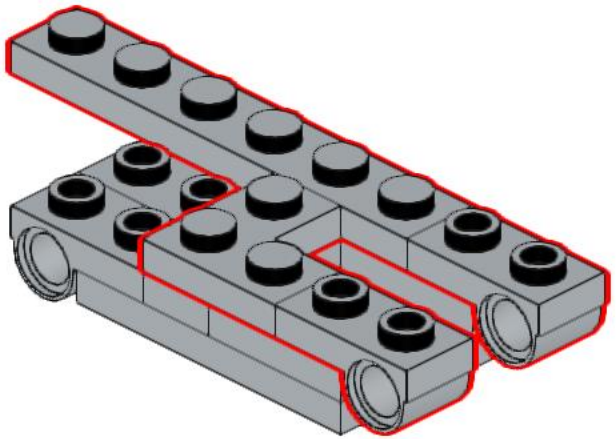

107

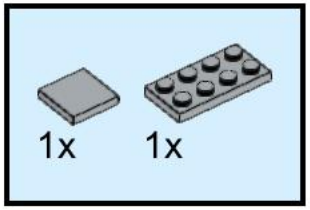

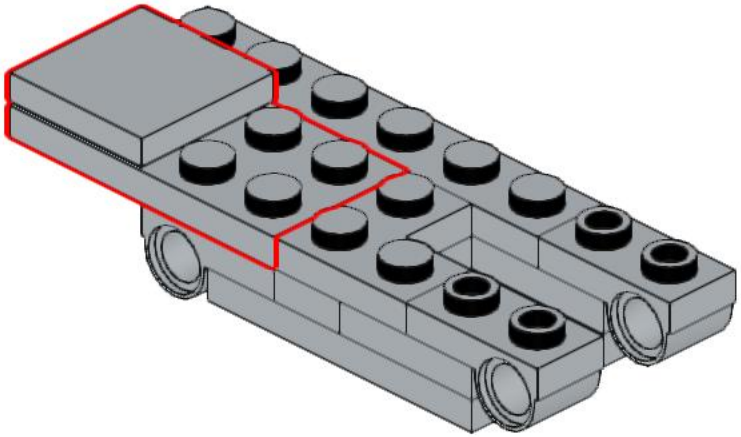

108

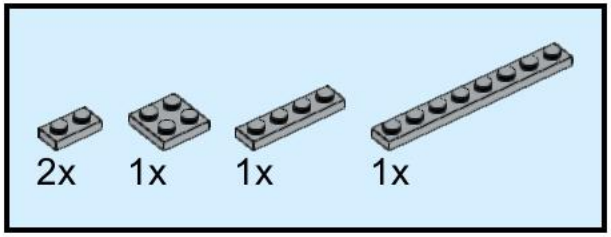

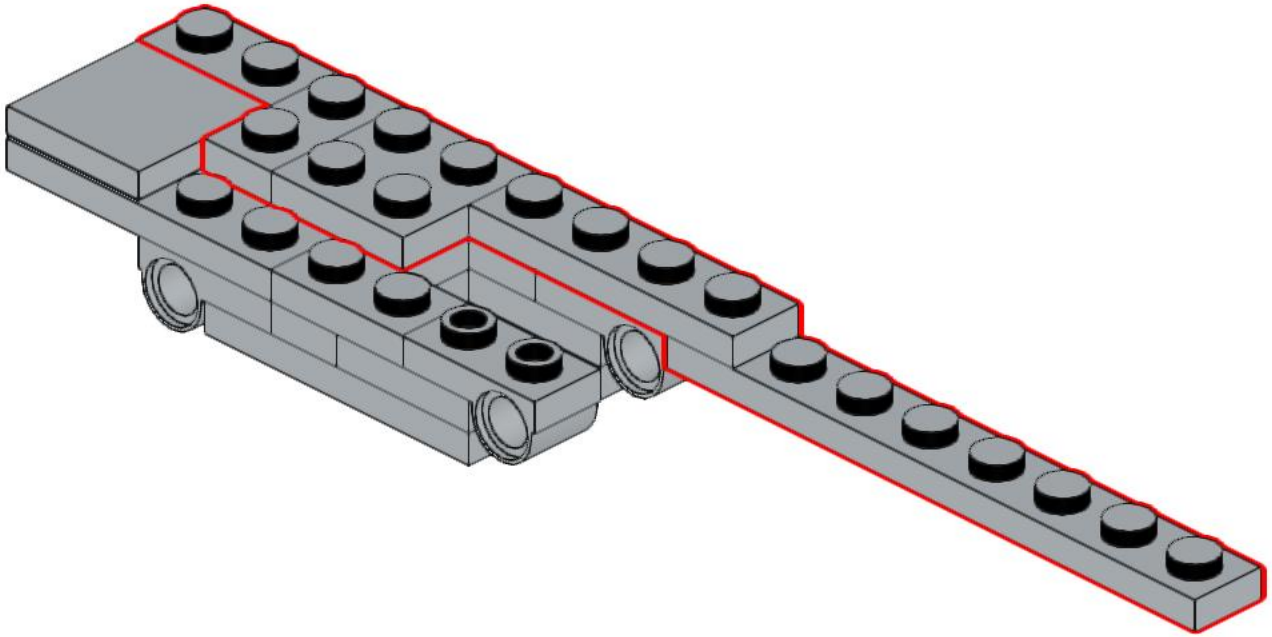

109

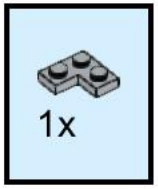

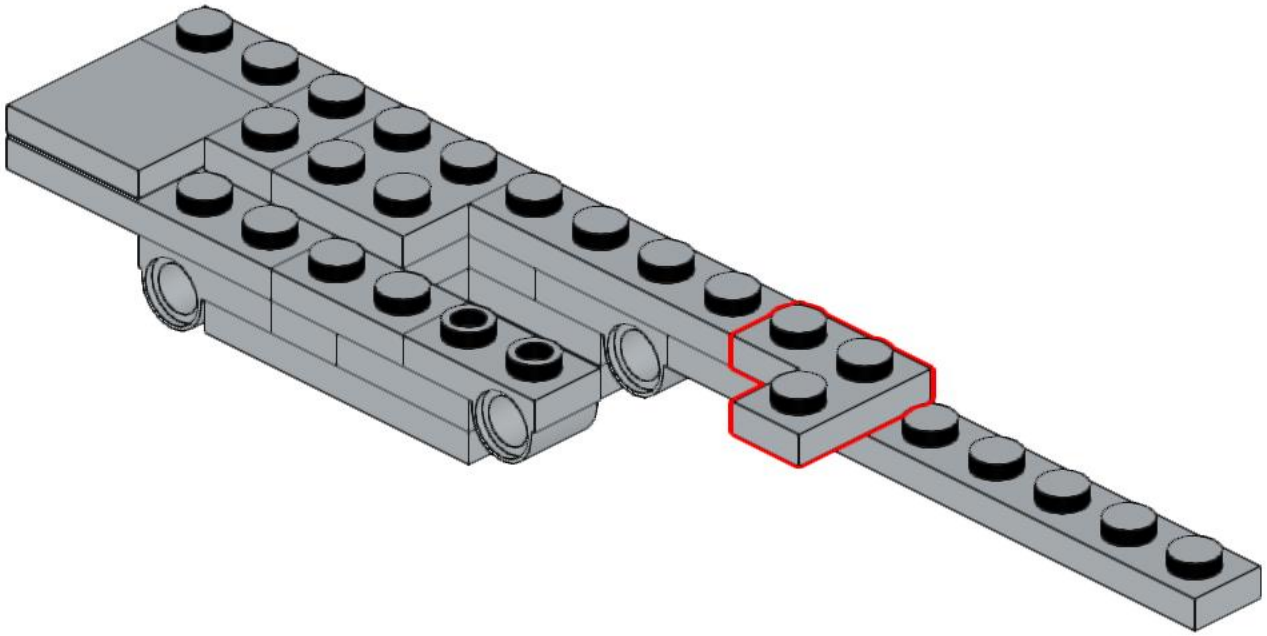

110

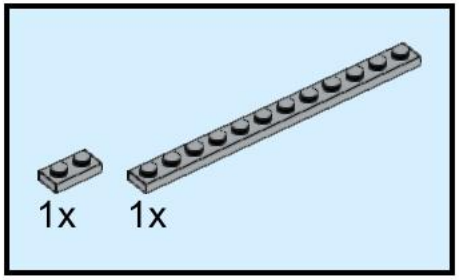

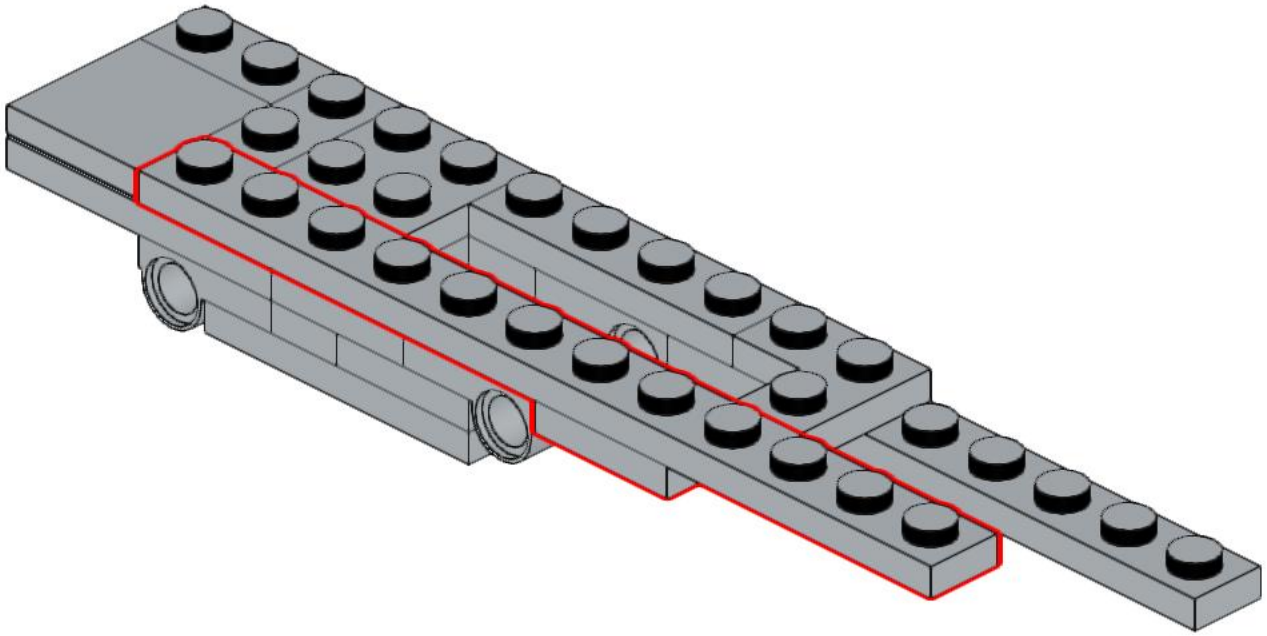

111

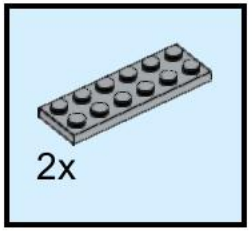

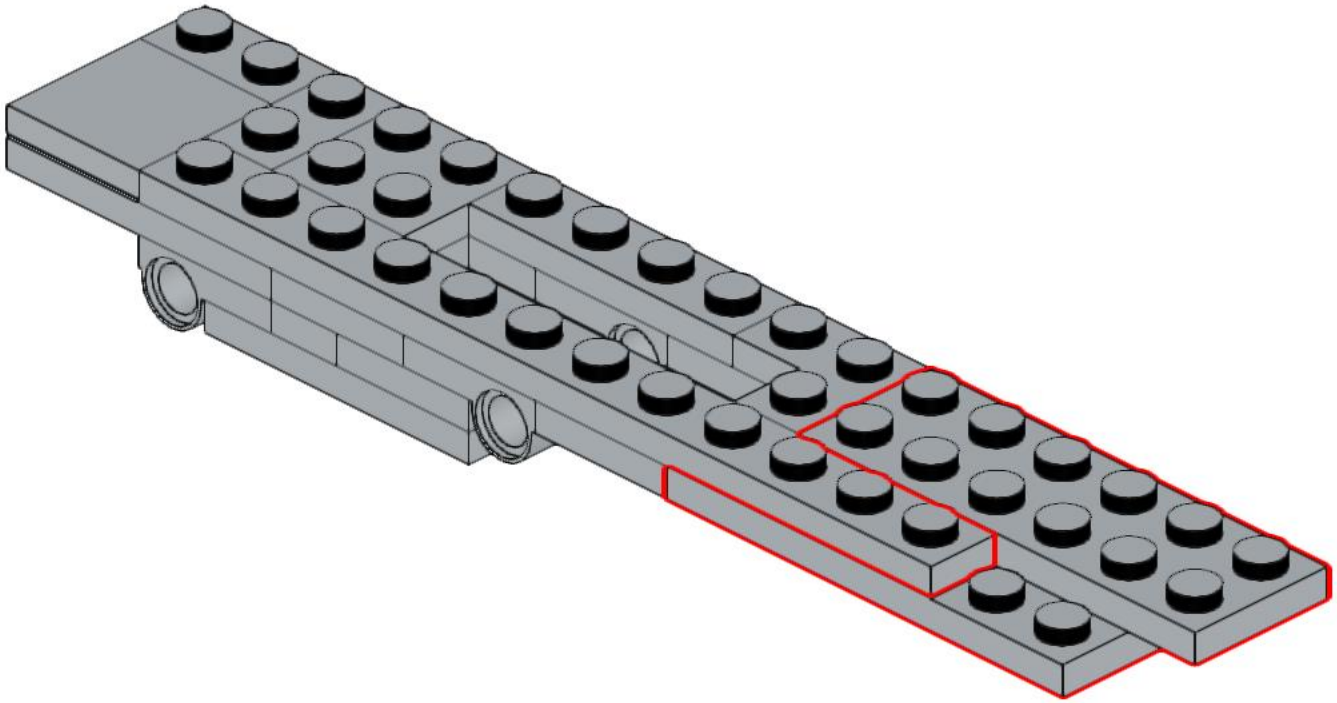

112

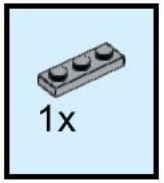

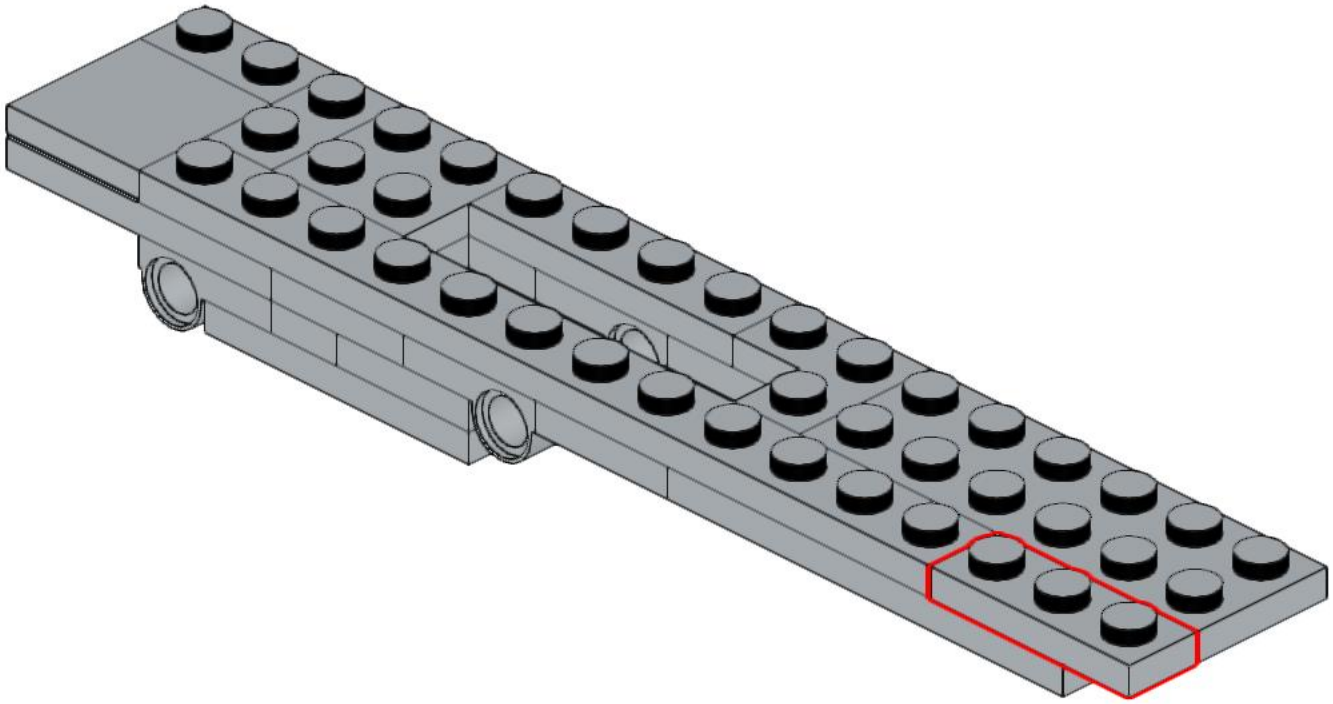

113

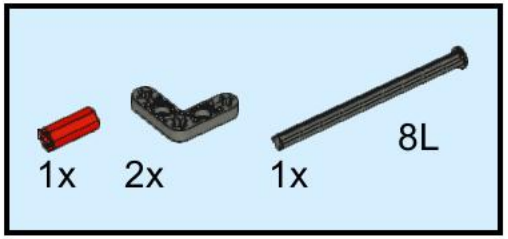

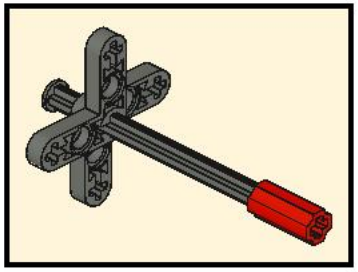

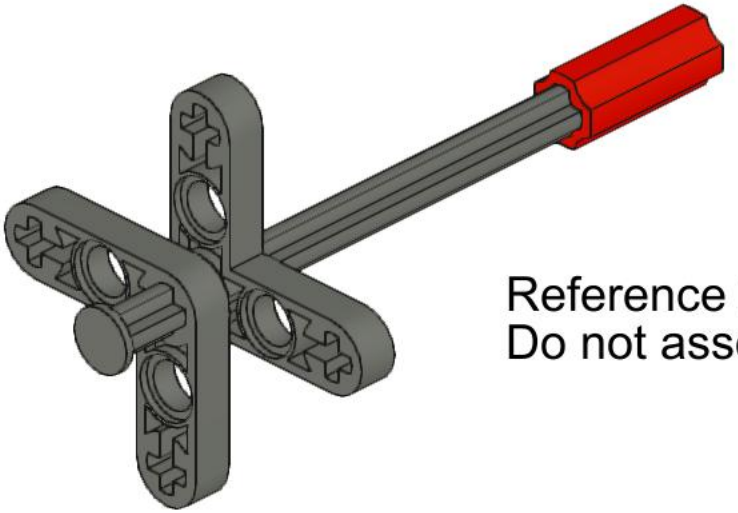

Reference Image.
Do not assemble.

114

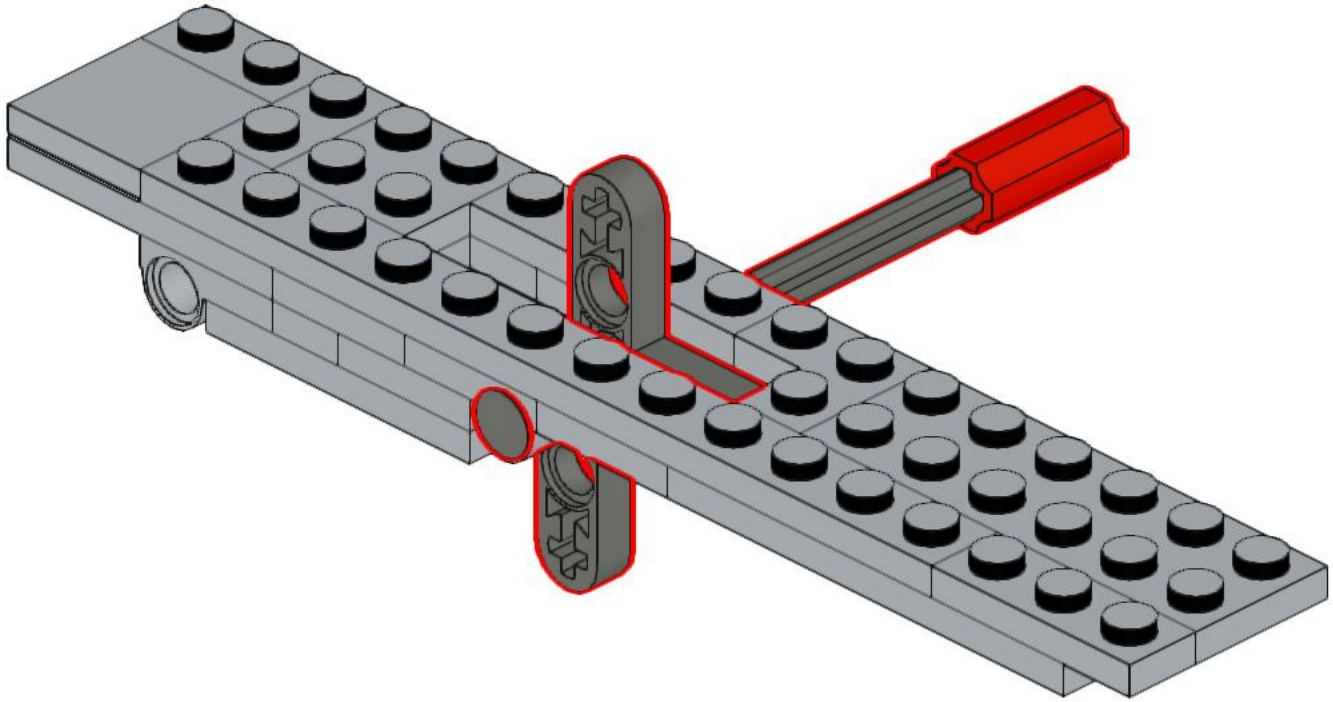

115

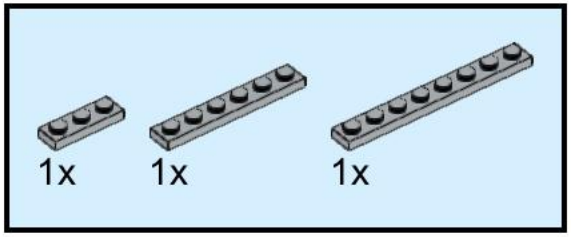

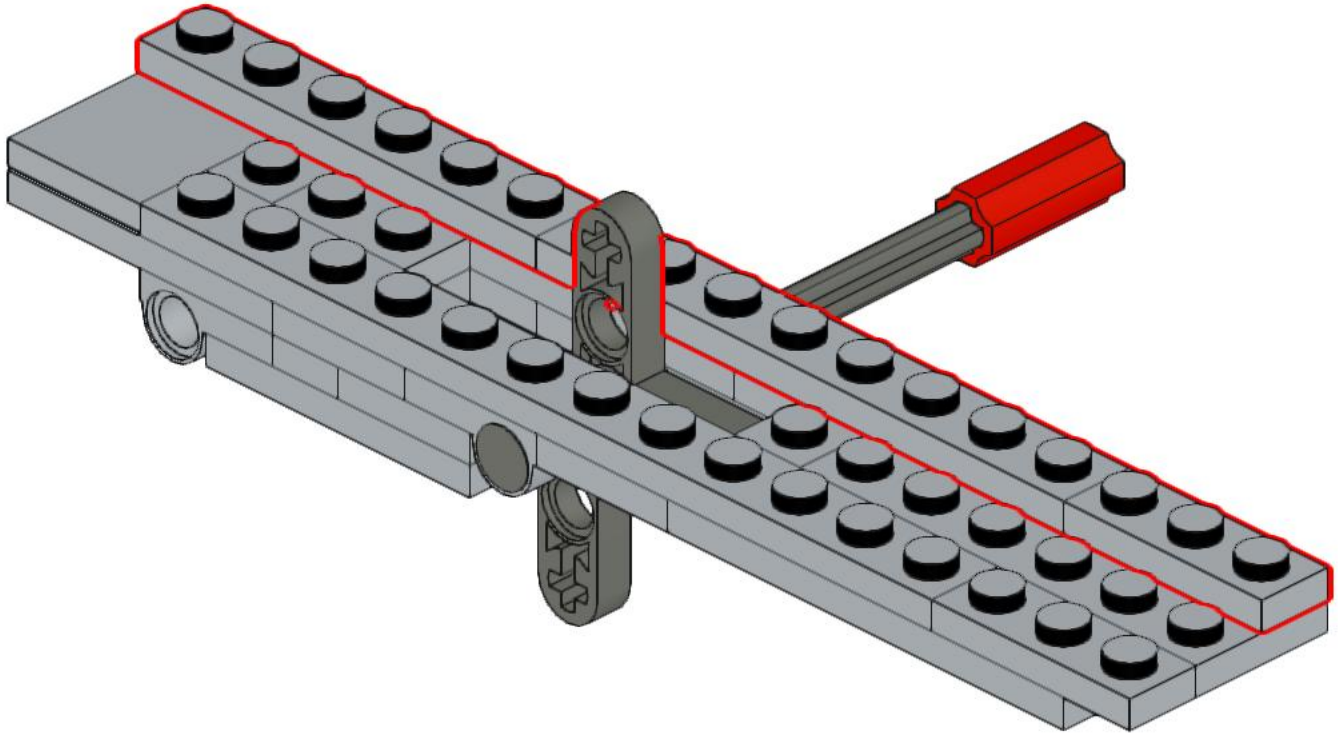

116

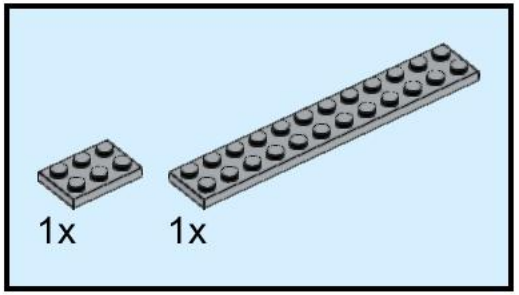

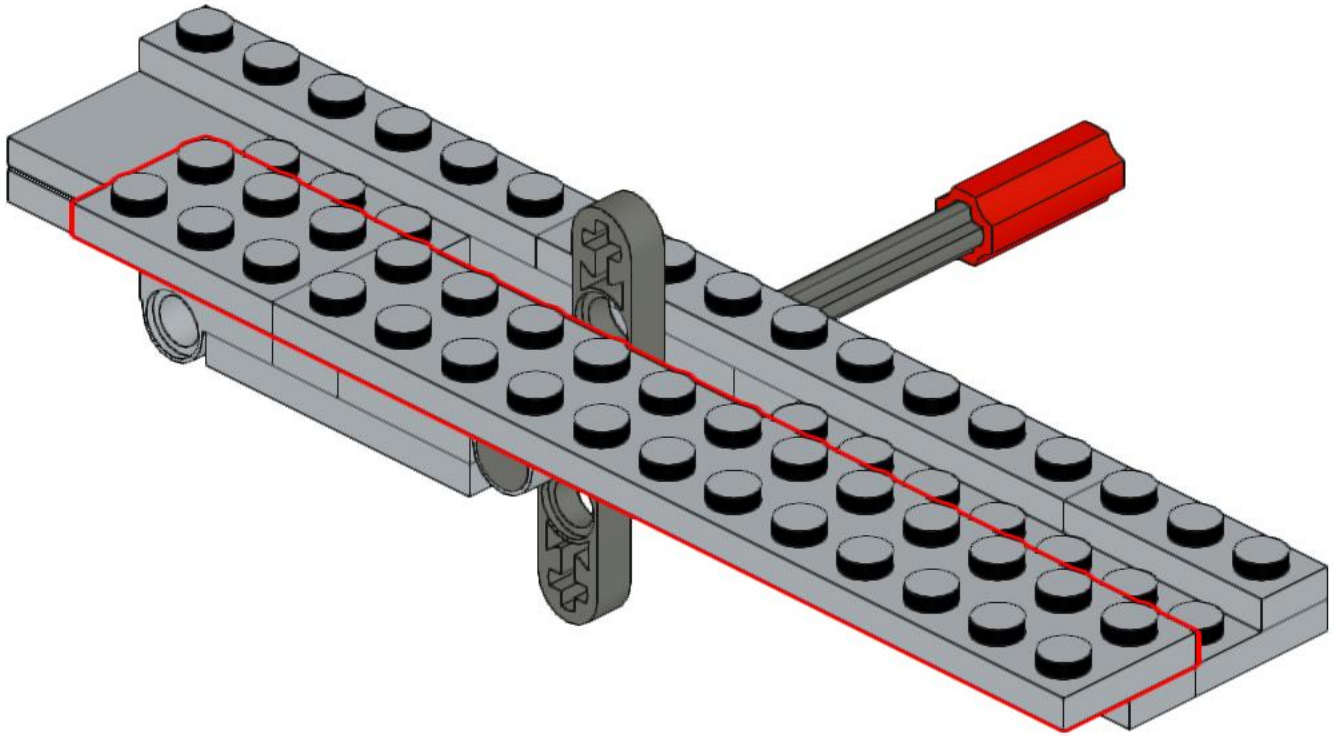

117

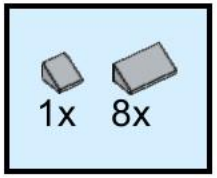

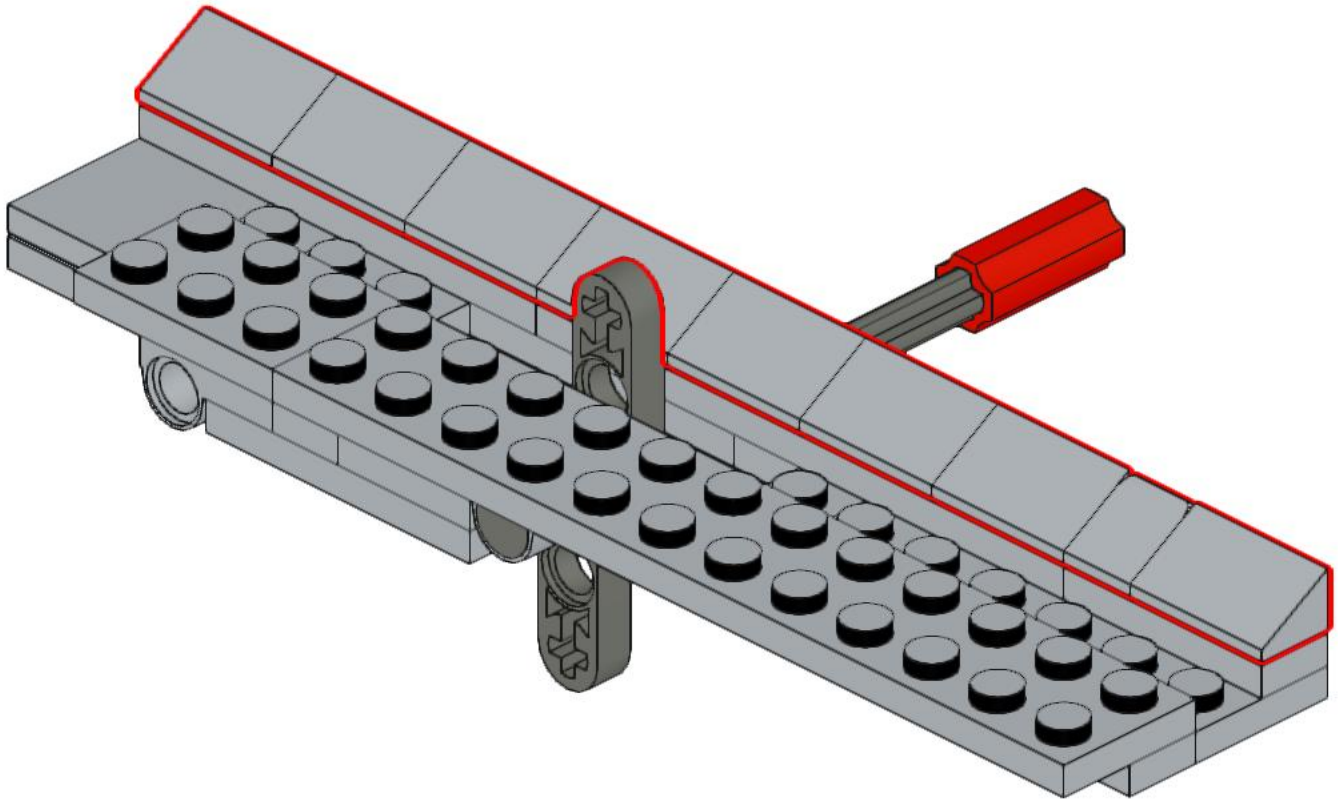

118

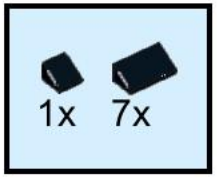

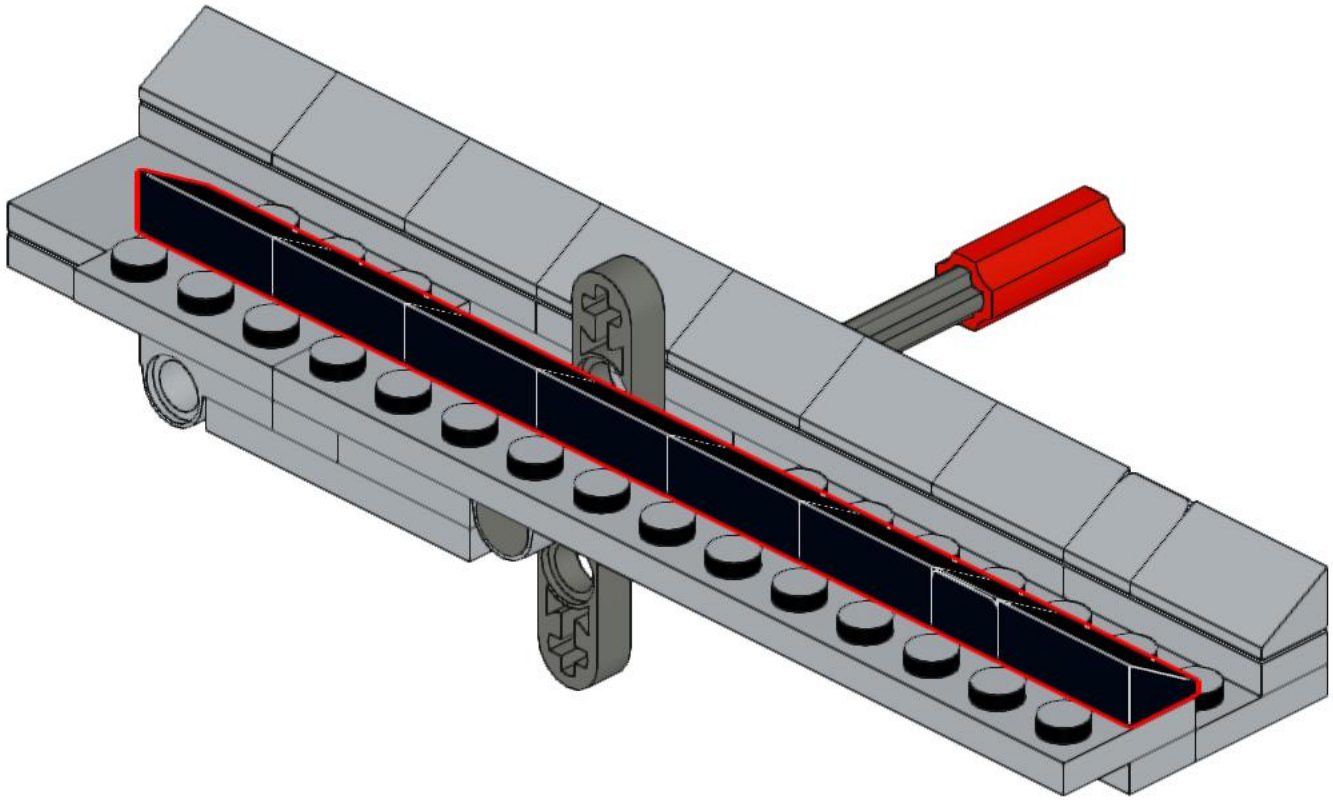

119

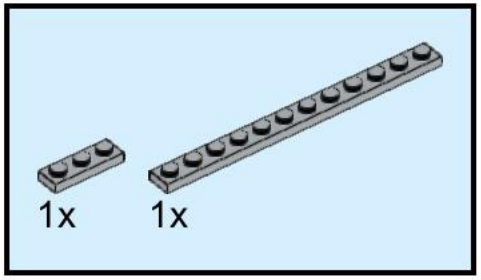

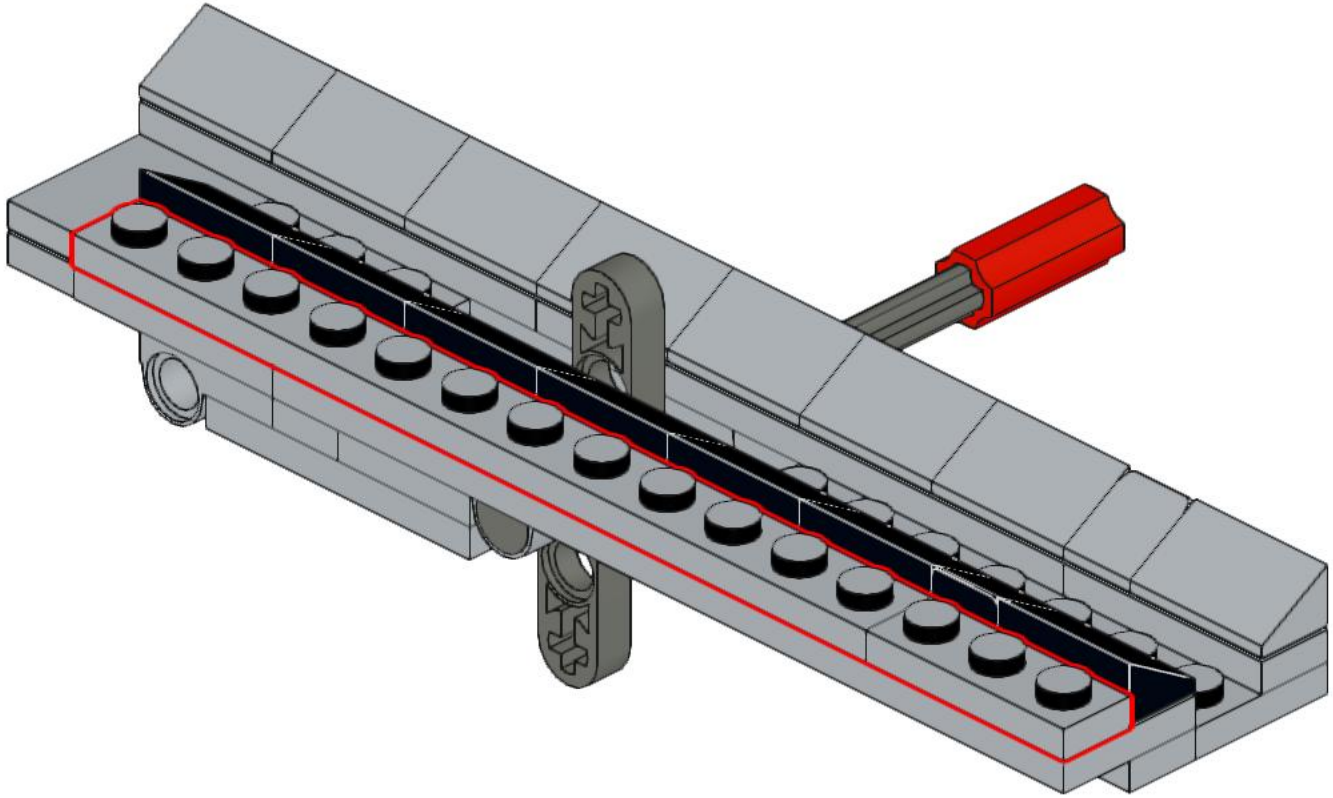

120

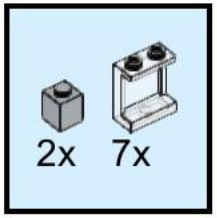

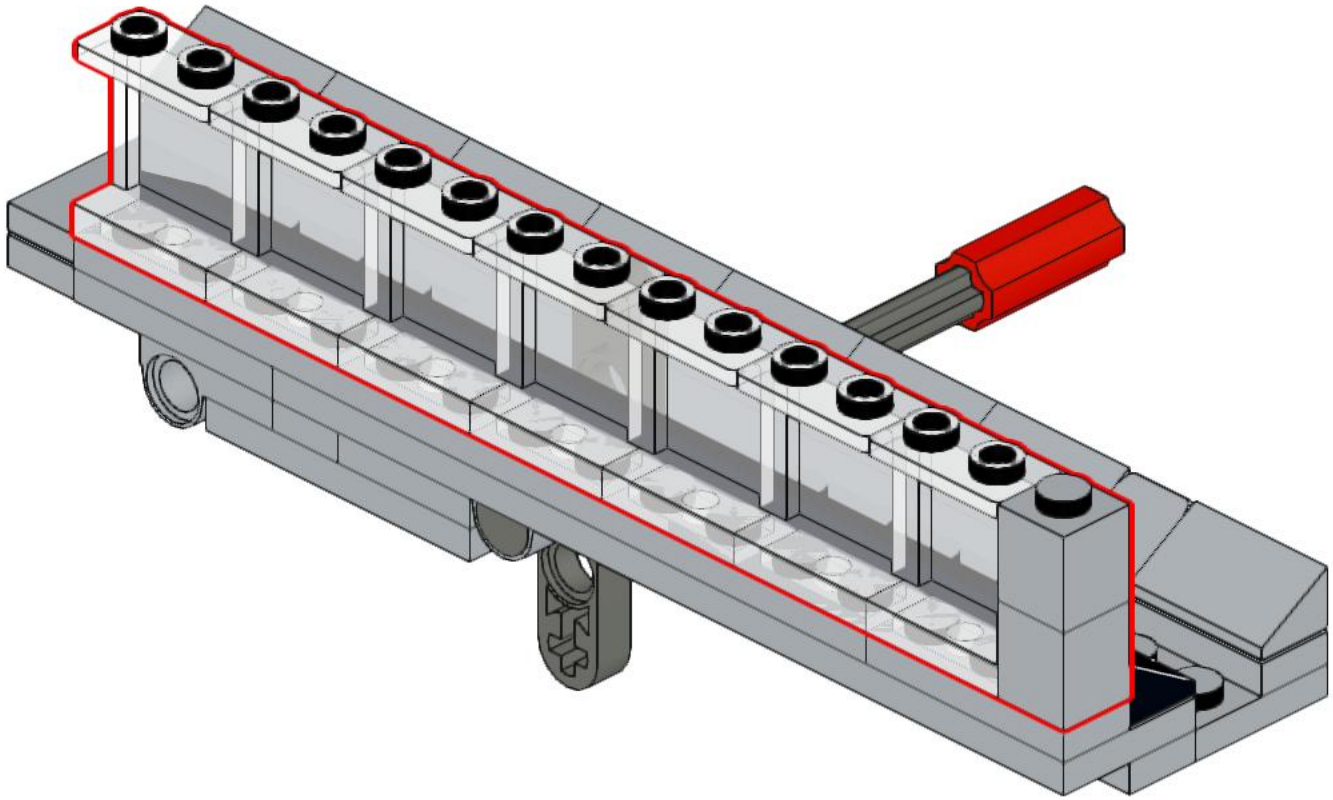

121

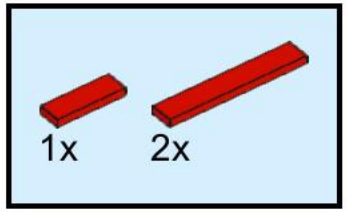

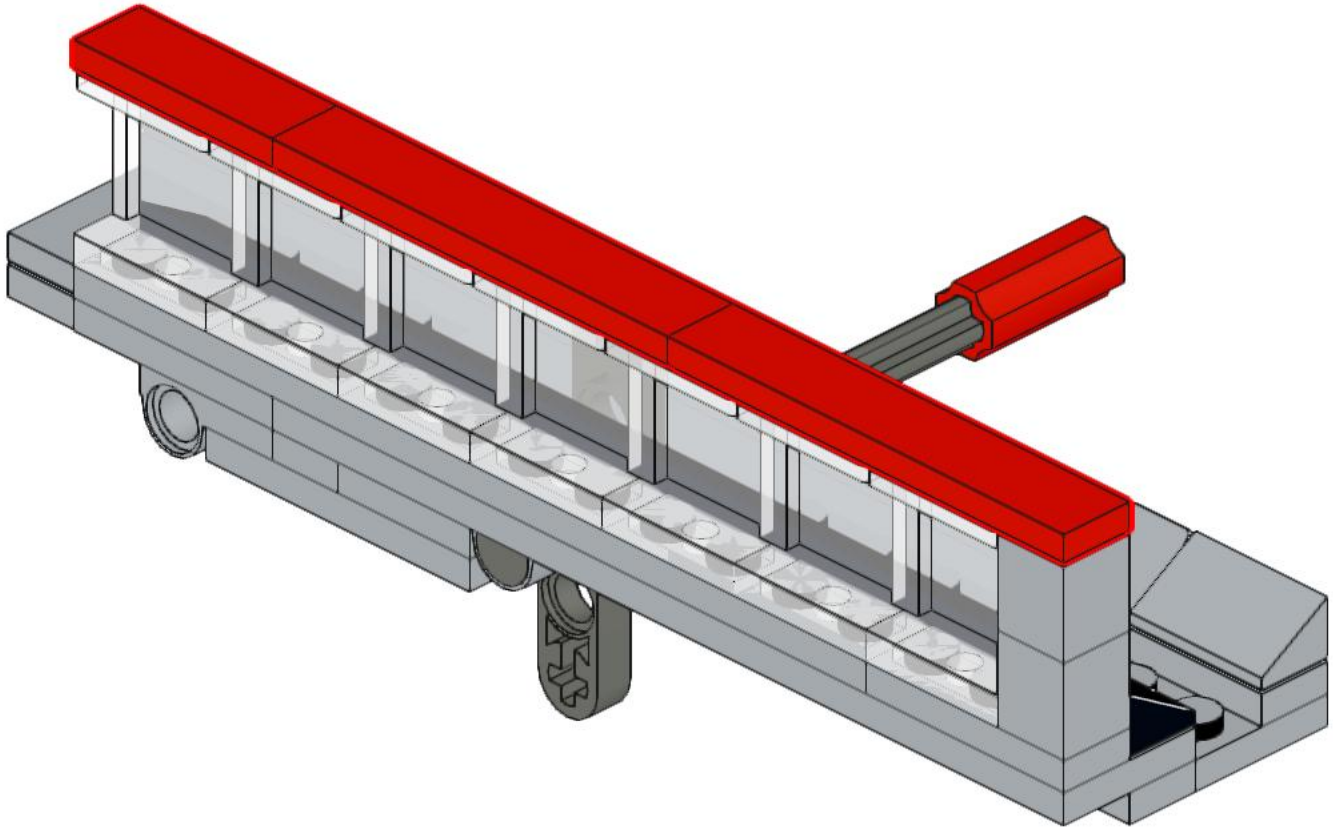

122

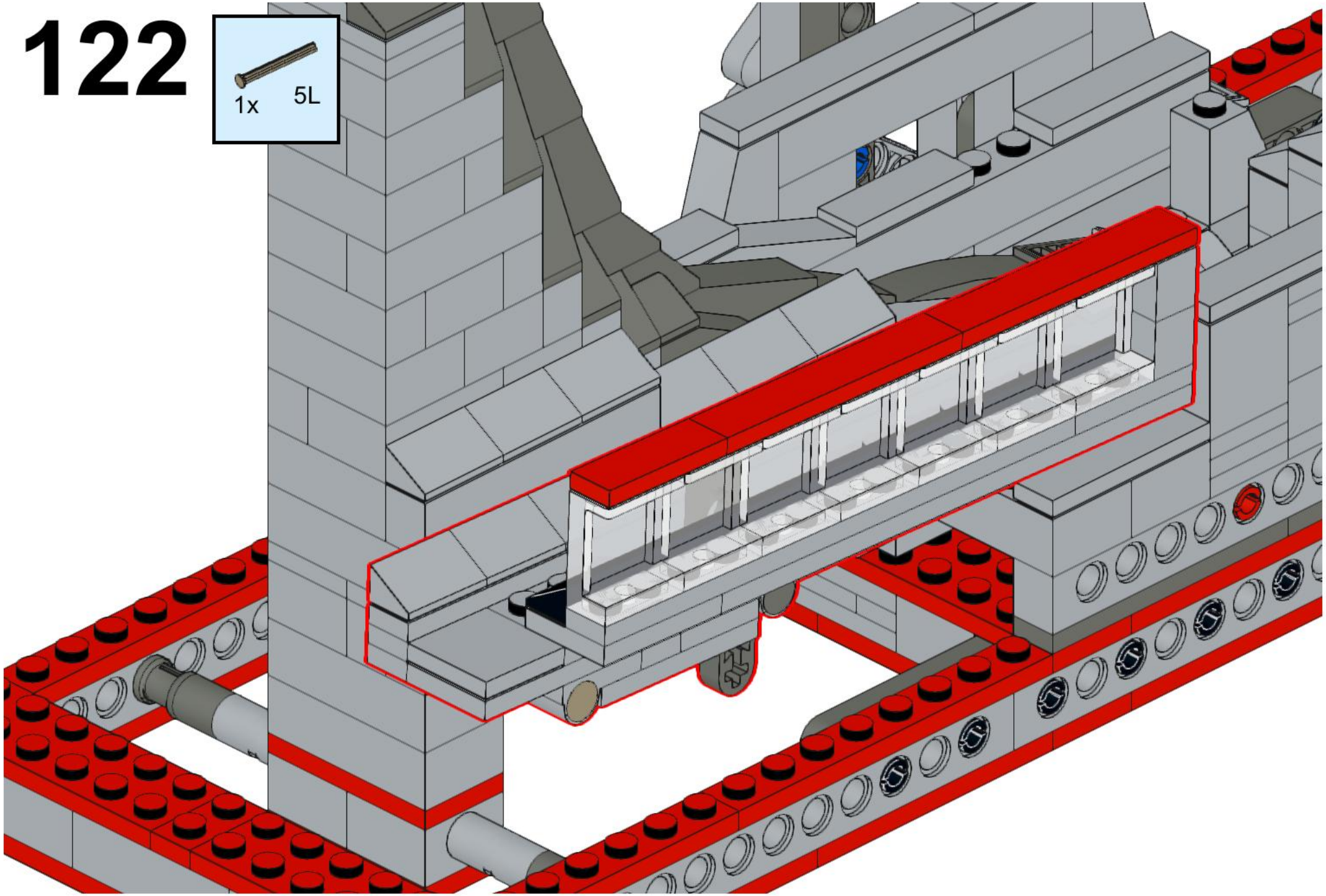

123

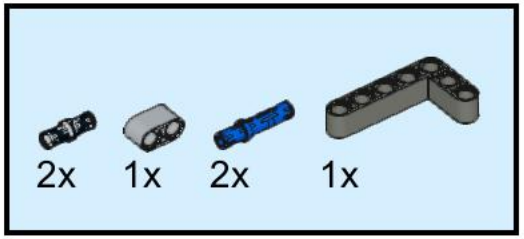

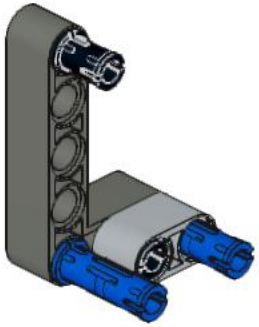

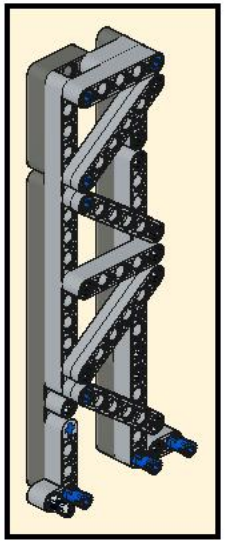

124

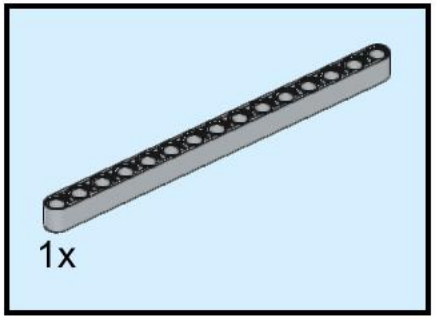

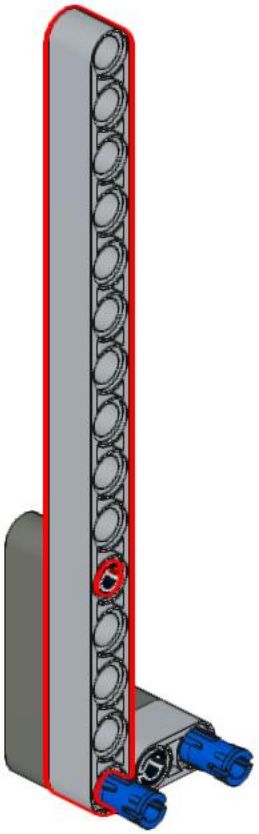

125

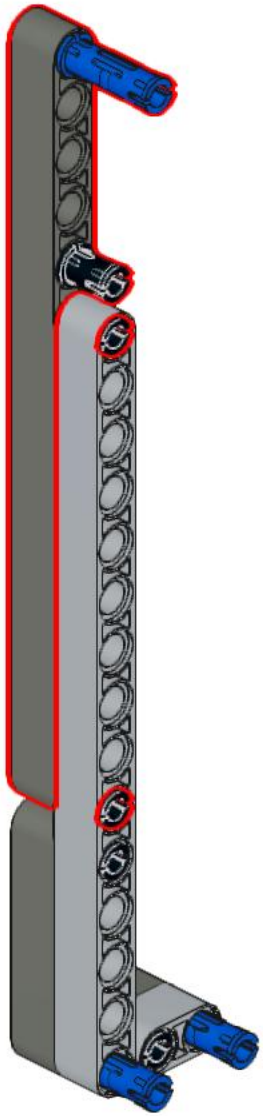

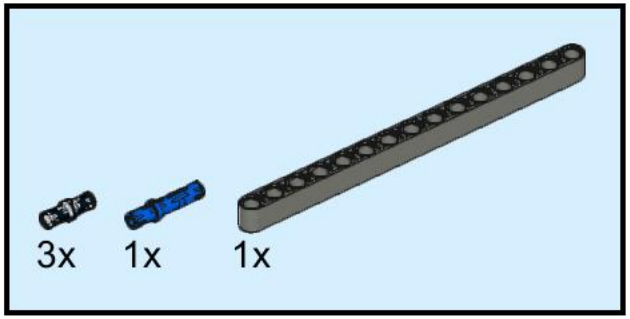

126

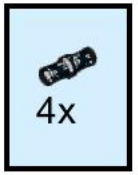

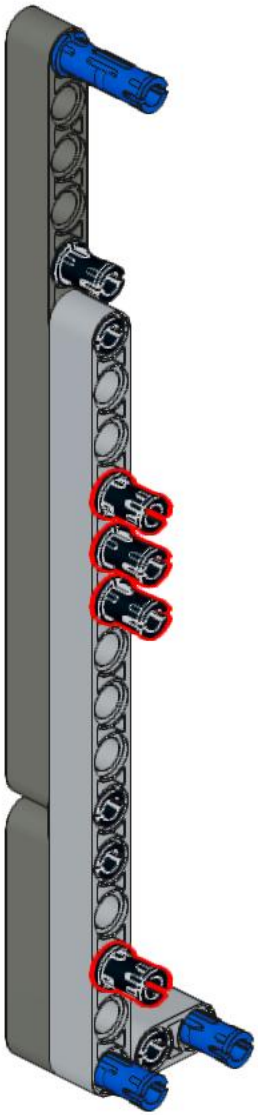

127

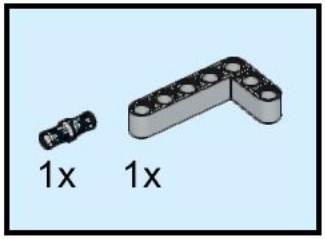

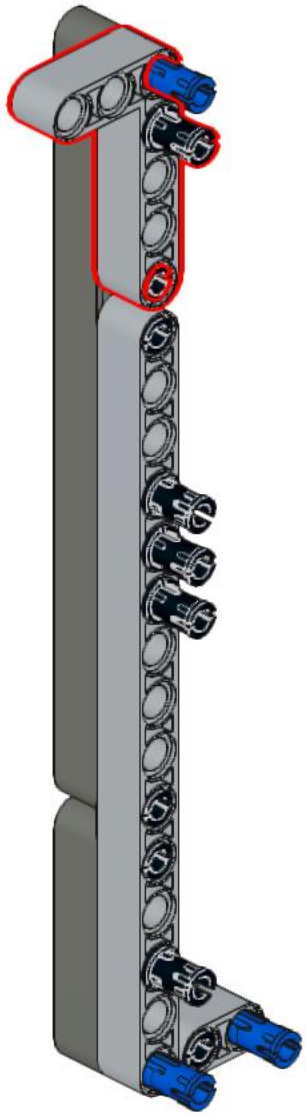

128

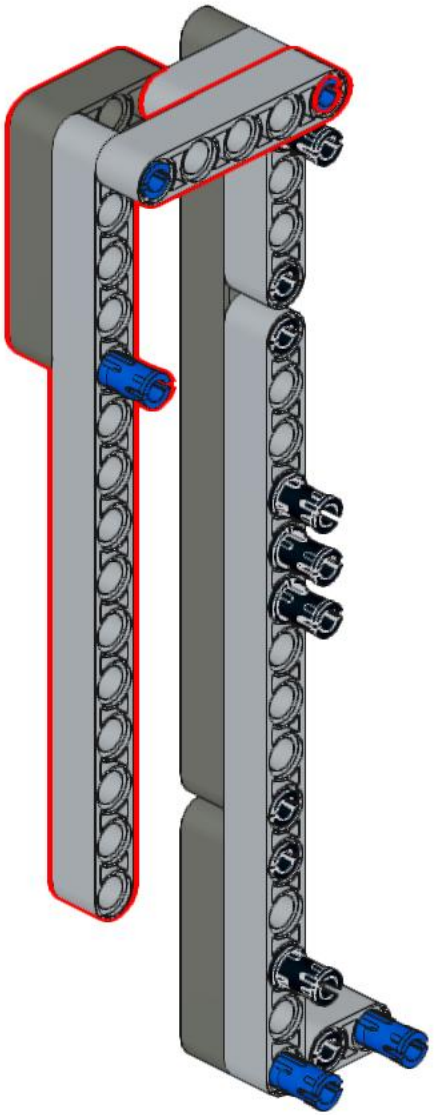

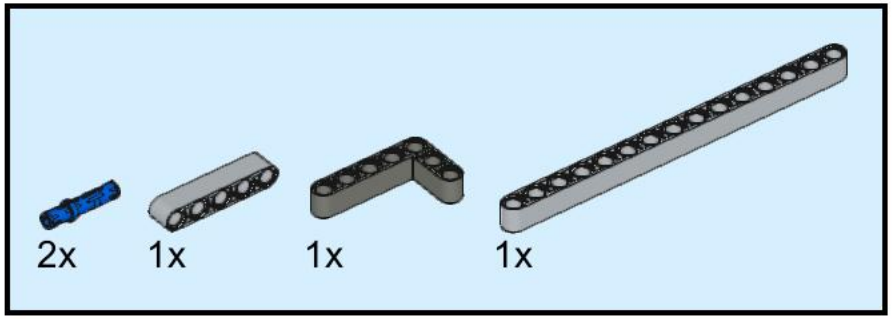

129

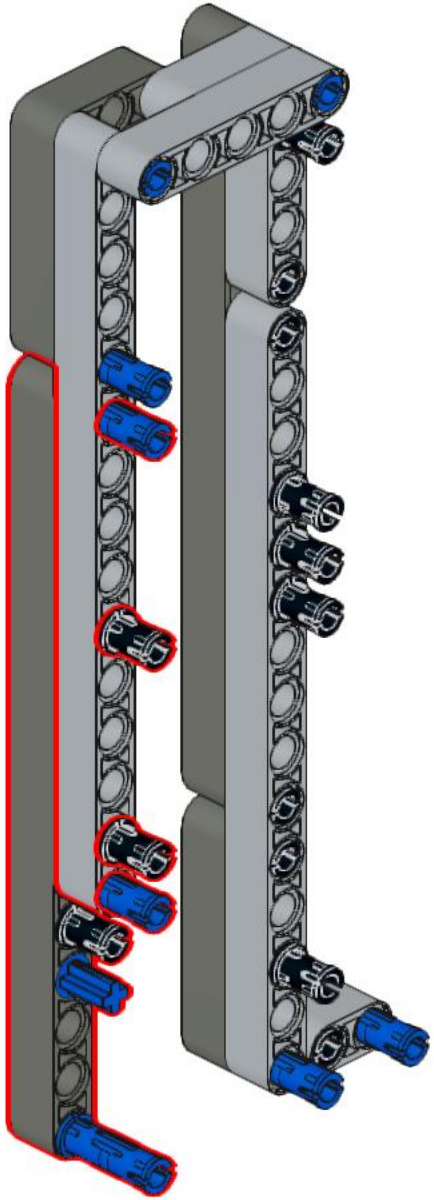

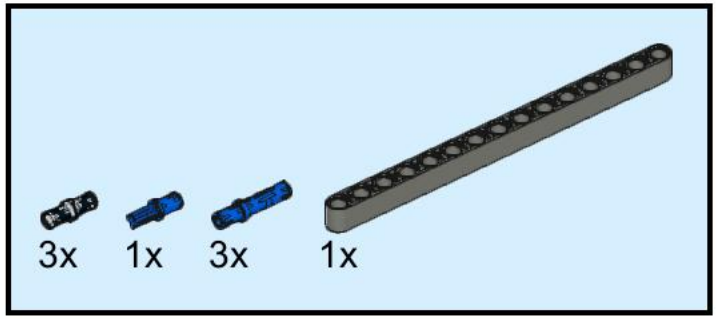

130

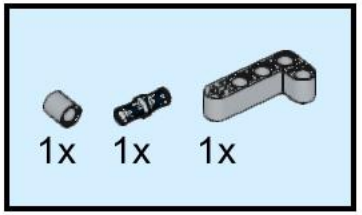

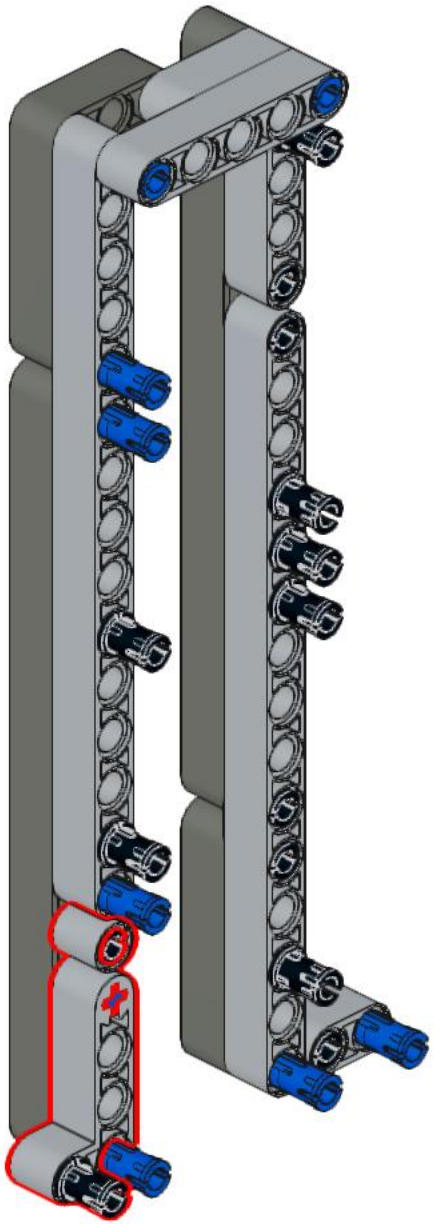

131

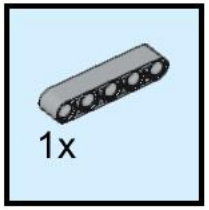

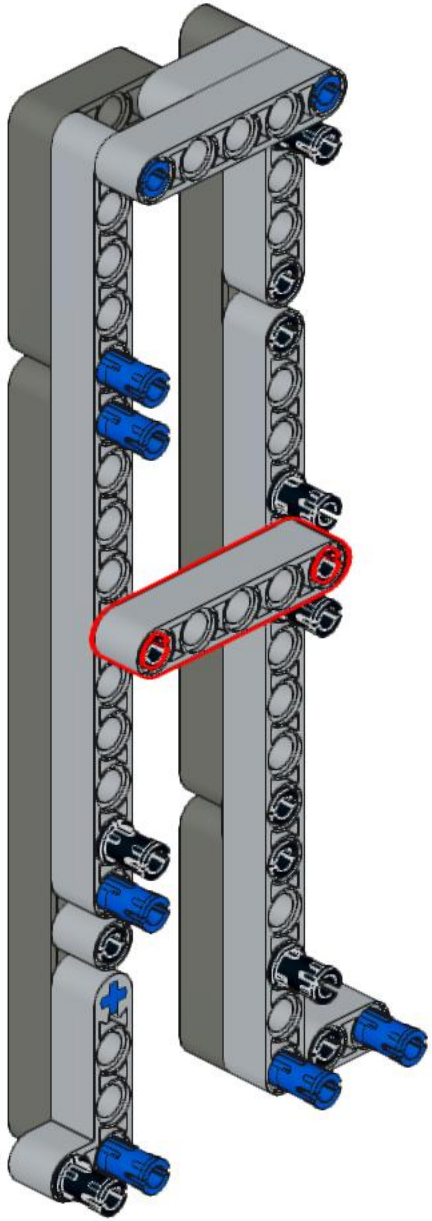

132

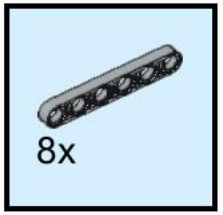

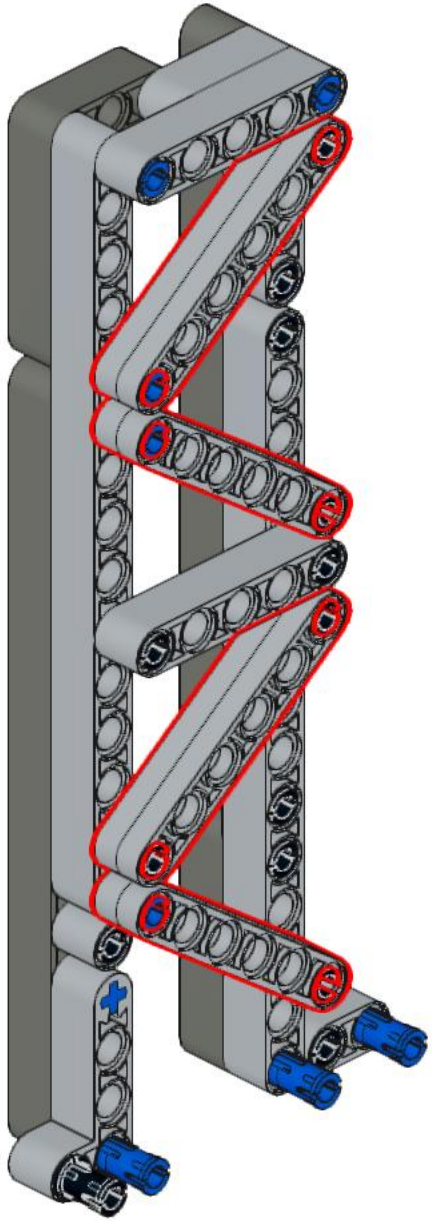

133

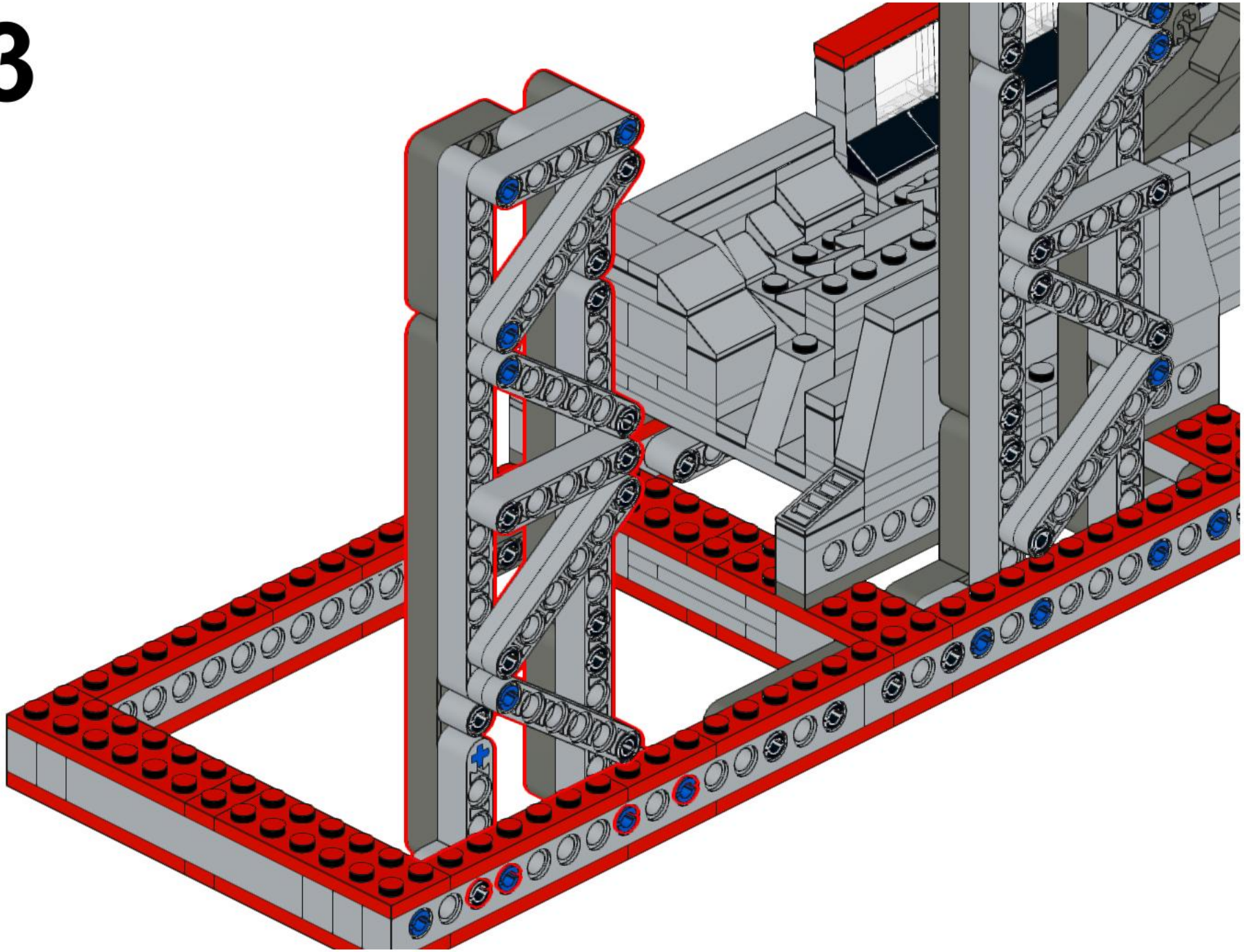

134

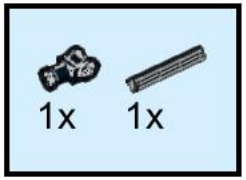

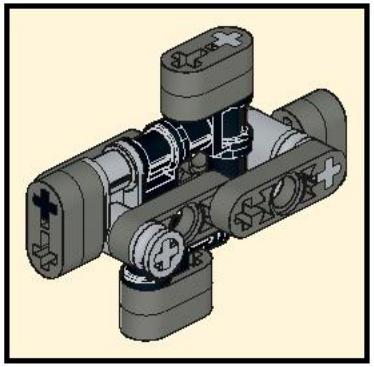

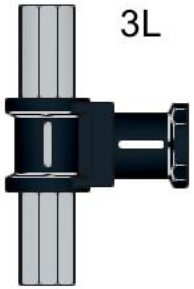

135

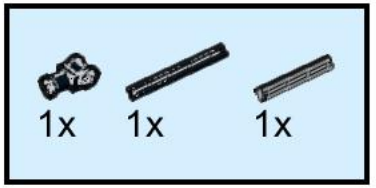

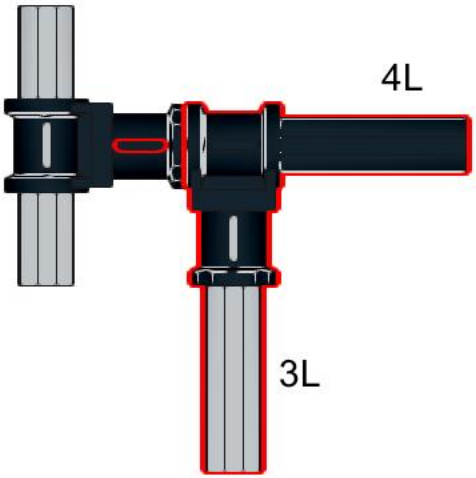

136

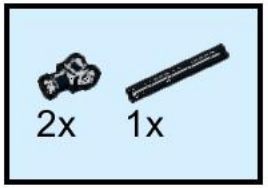

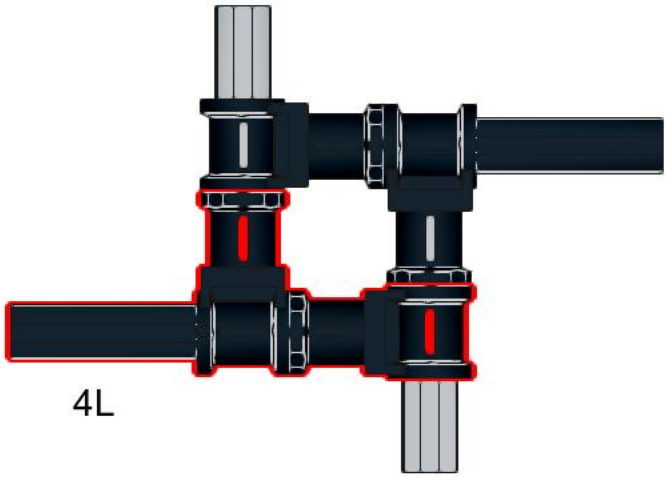

137

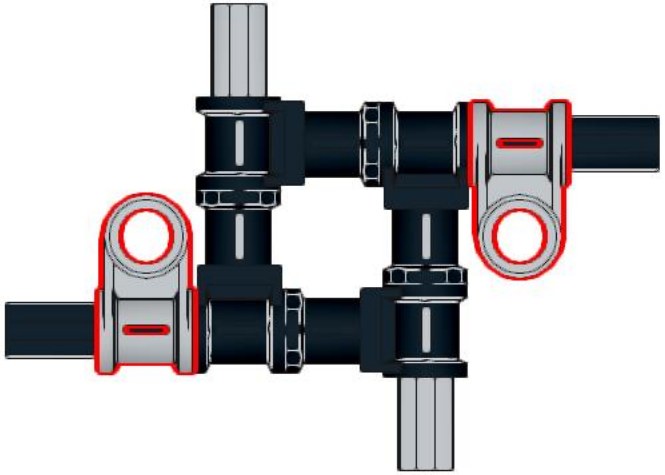

138

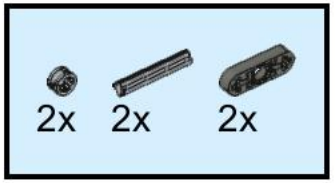

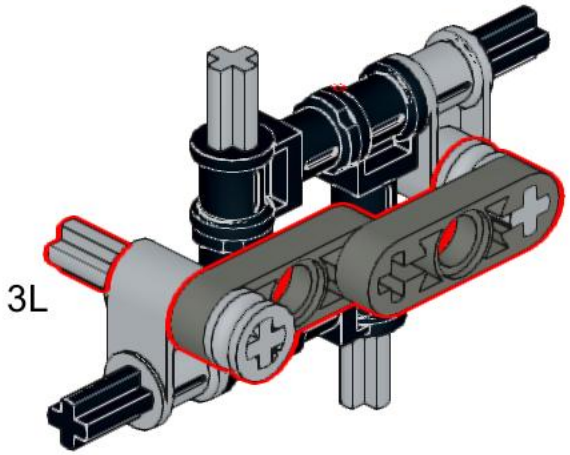

139

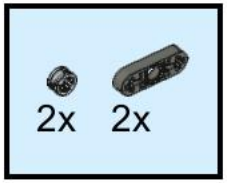

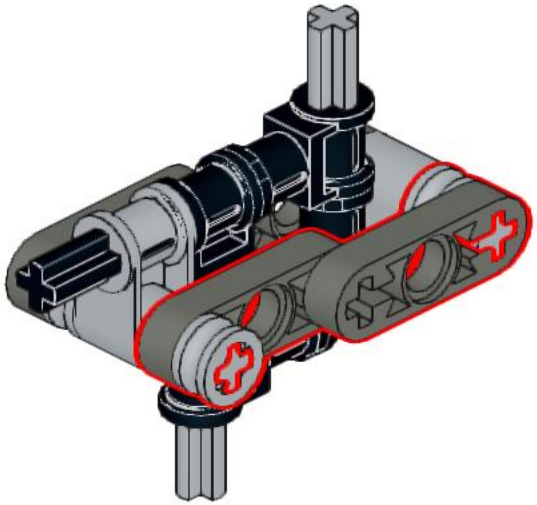

140

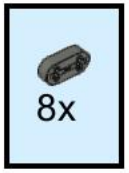

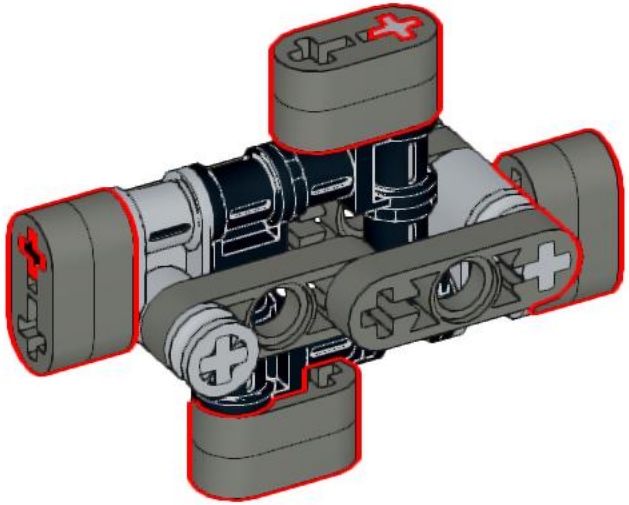

141

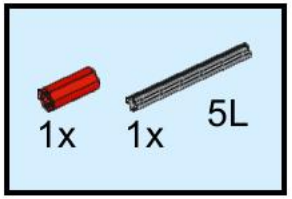

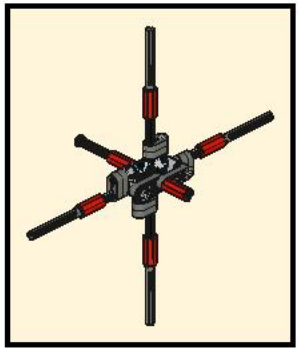

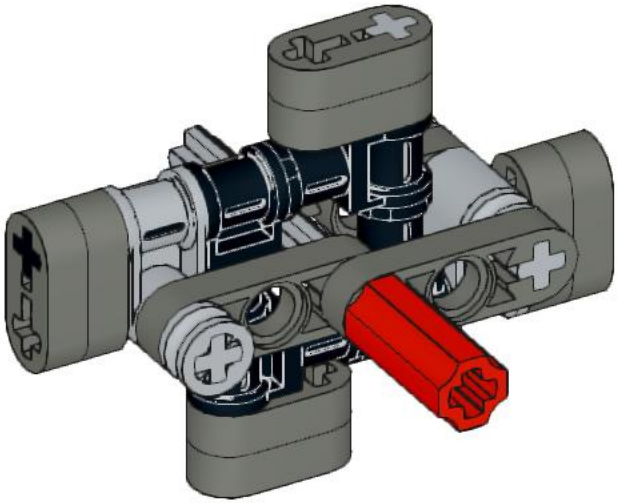

142

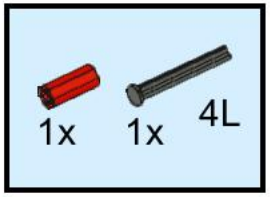

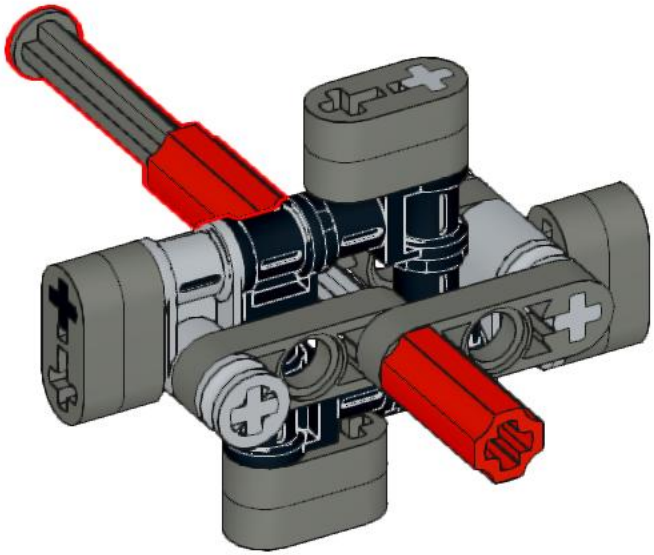

Remove this 4L axle and use it to fix the Truss Wheel to the front support truss later in these instructions.

143

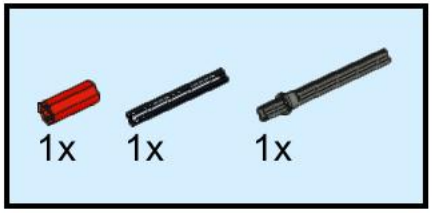

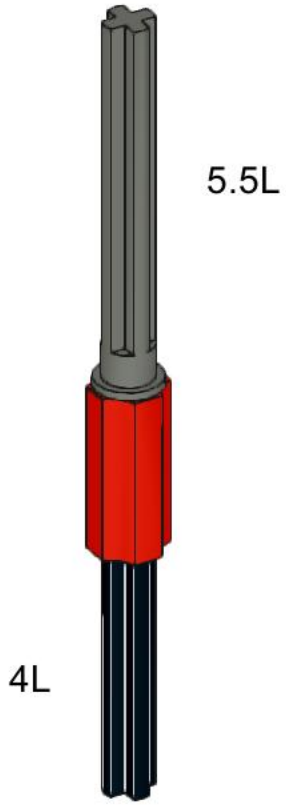

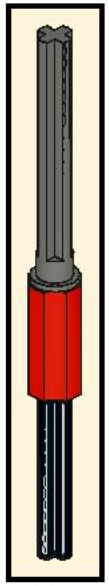

2x

144

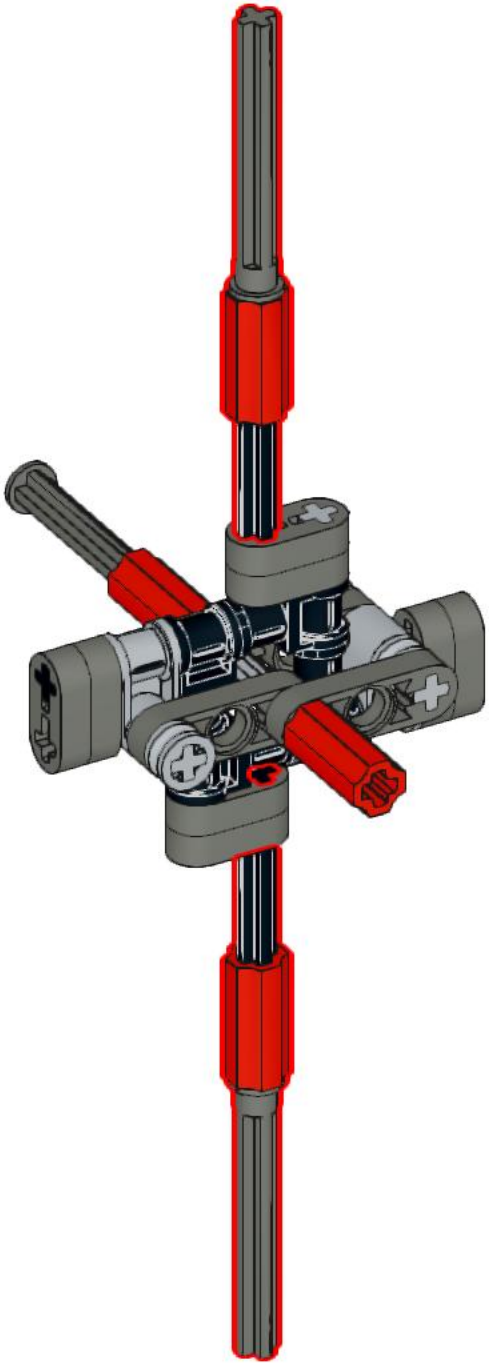

145

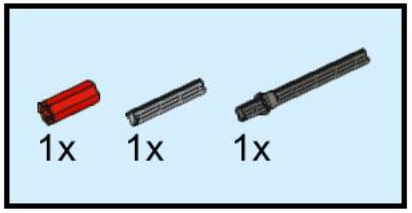

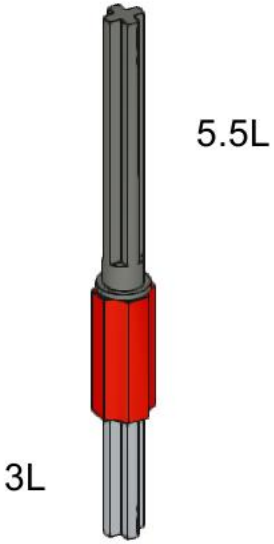

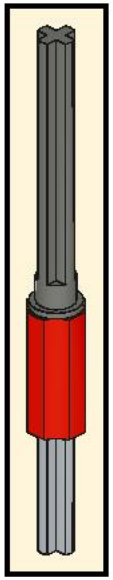

2x

146

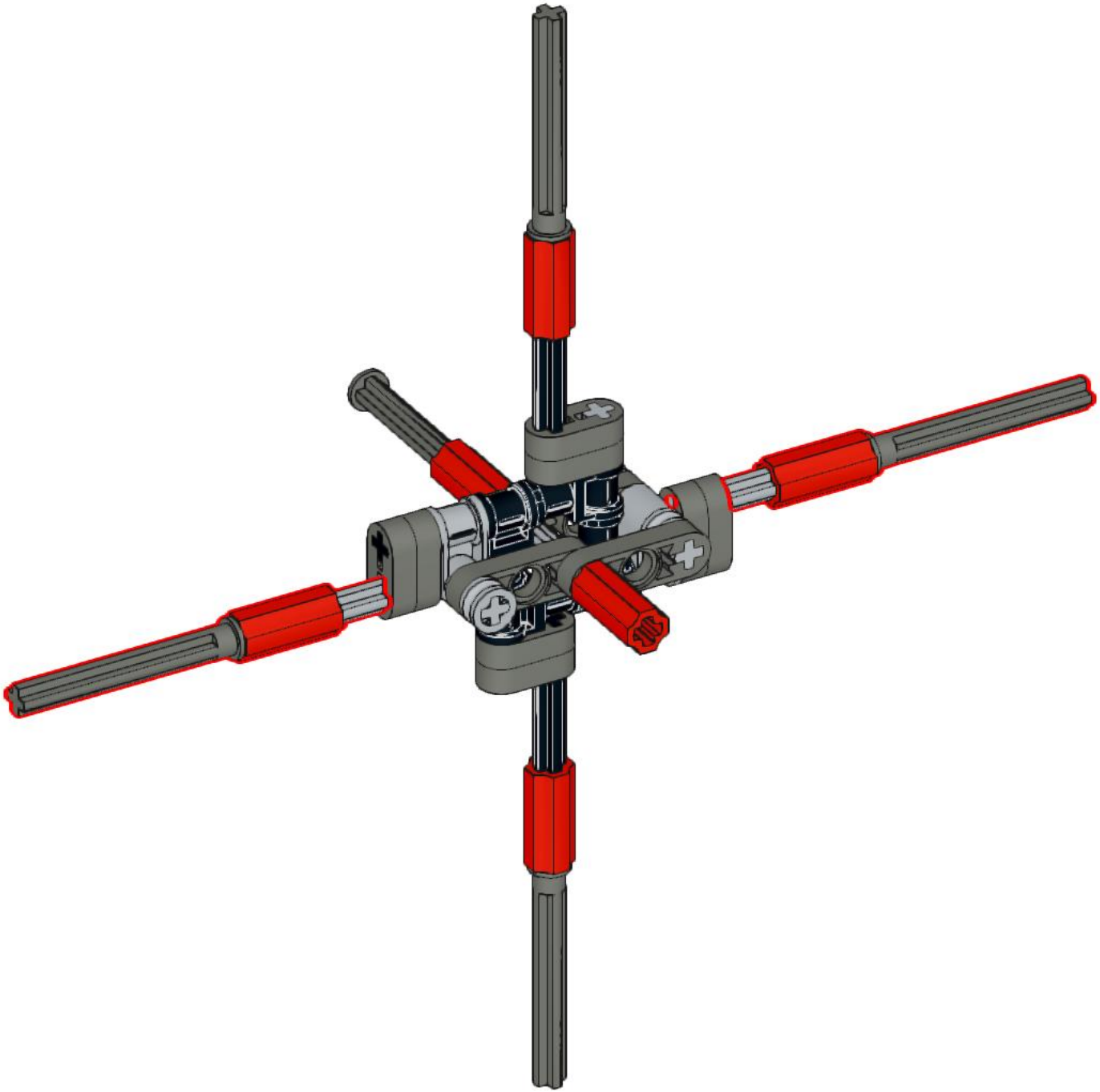

147

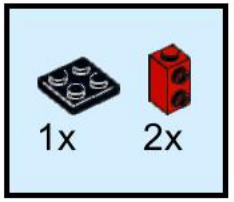

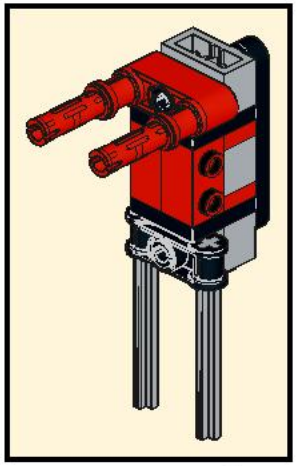

4x

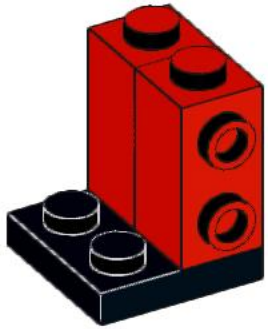

148

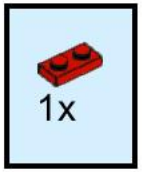

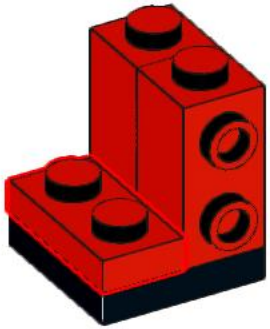

149

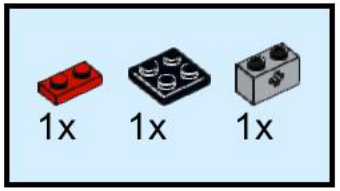

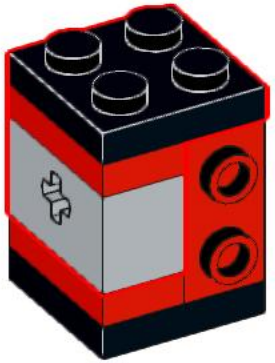

150

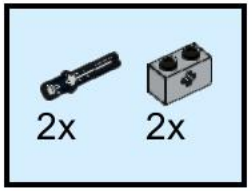

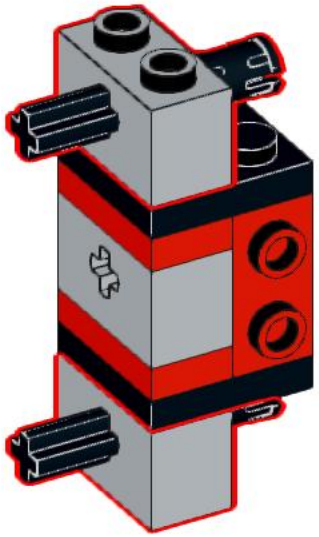

151

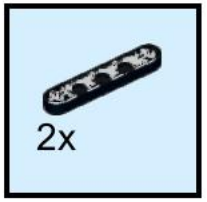

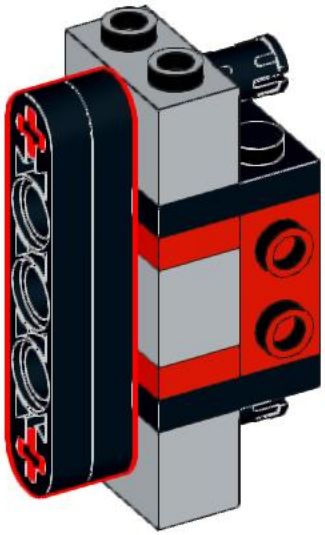

152

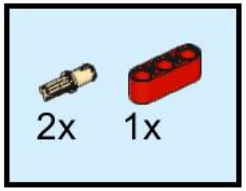

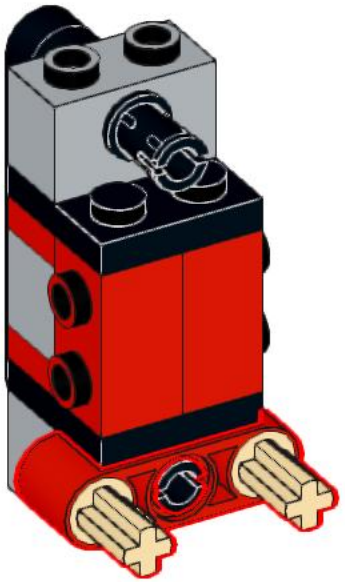

153

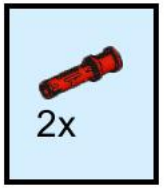

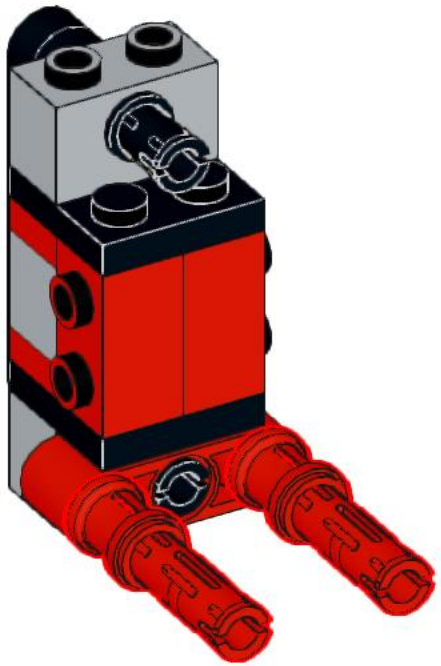

154

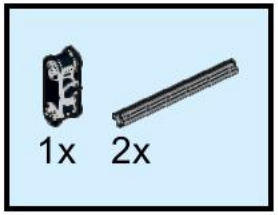

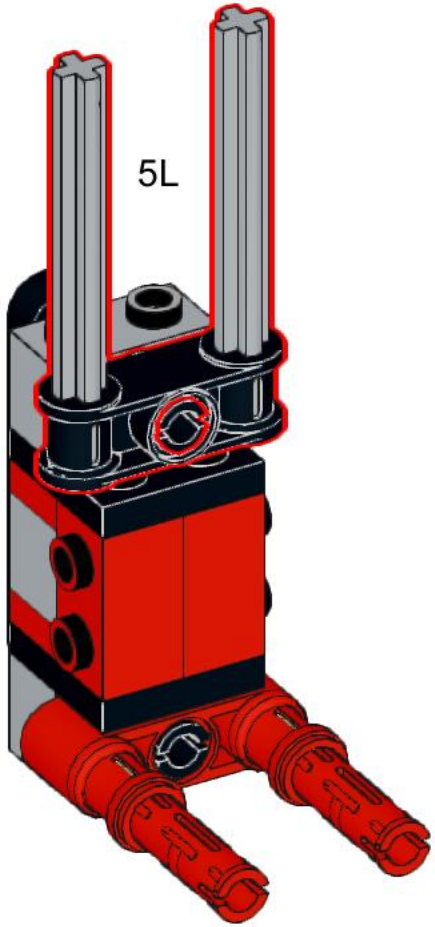

155

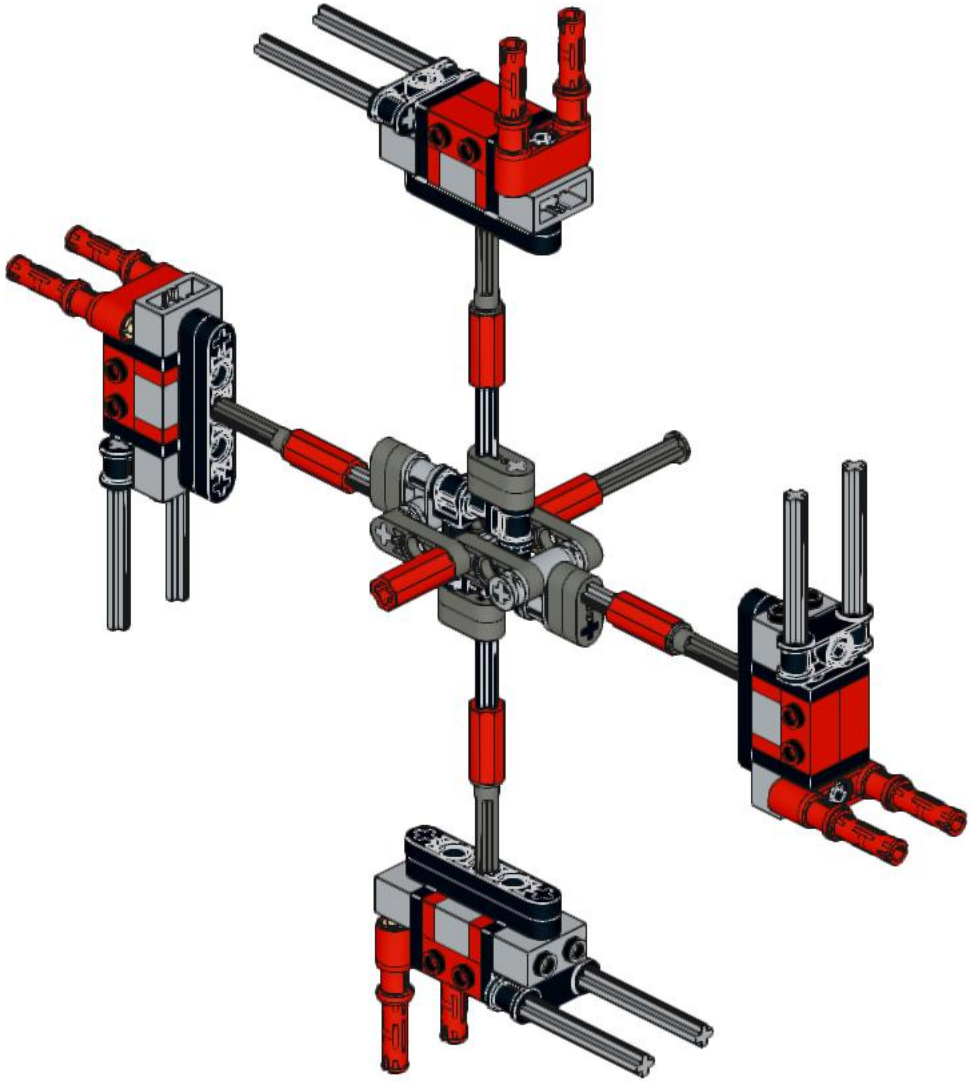

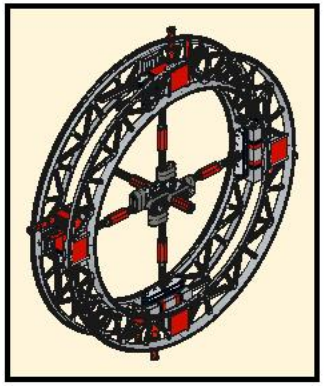

156

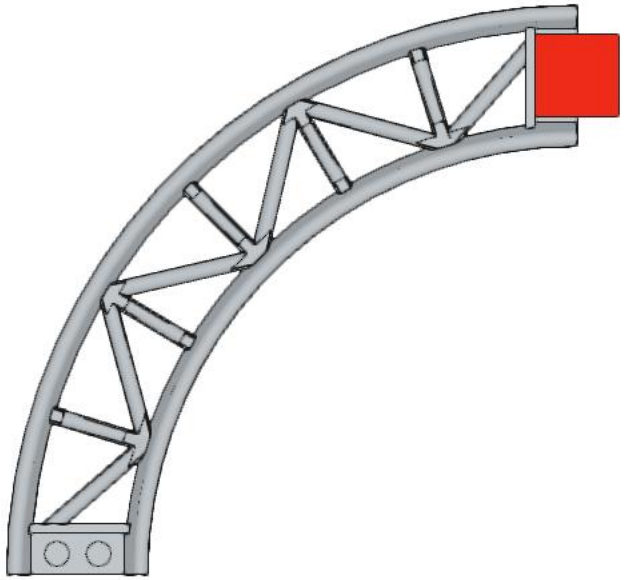

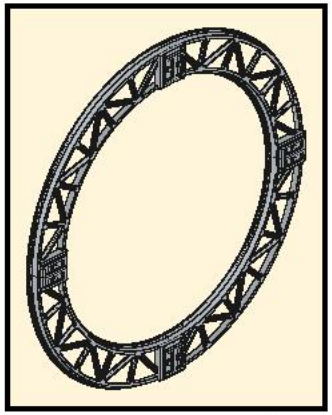

2x

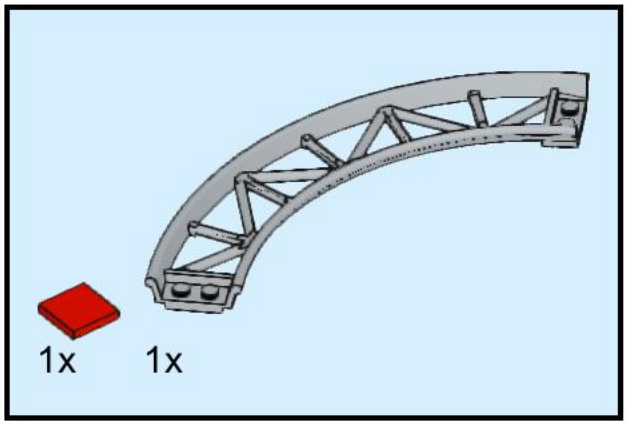

157

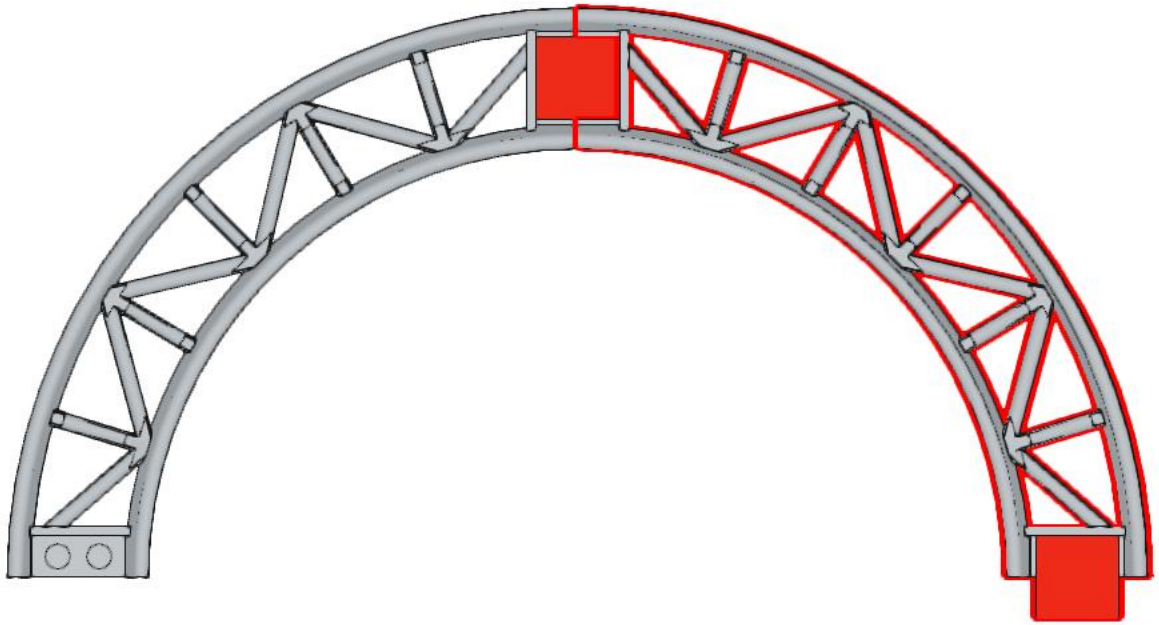

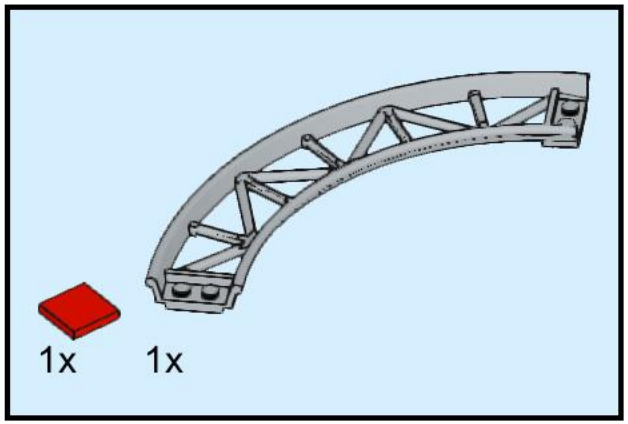

158

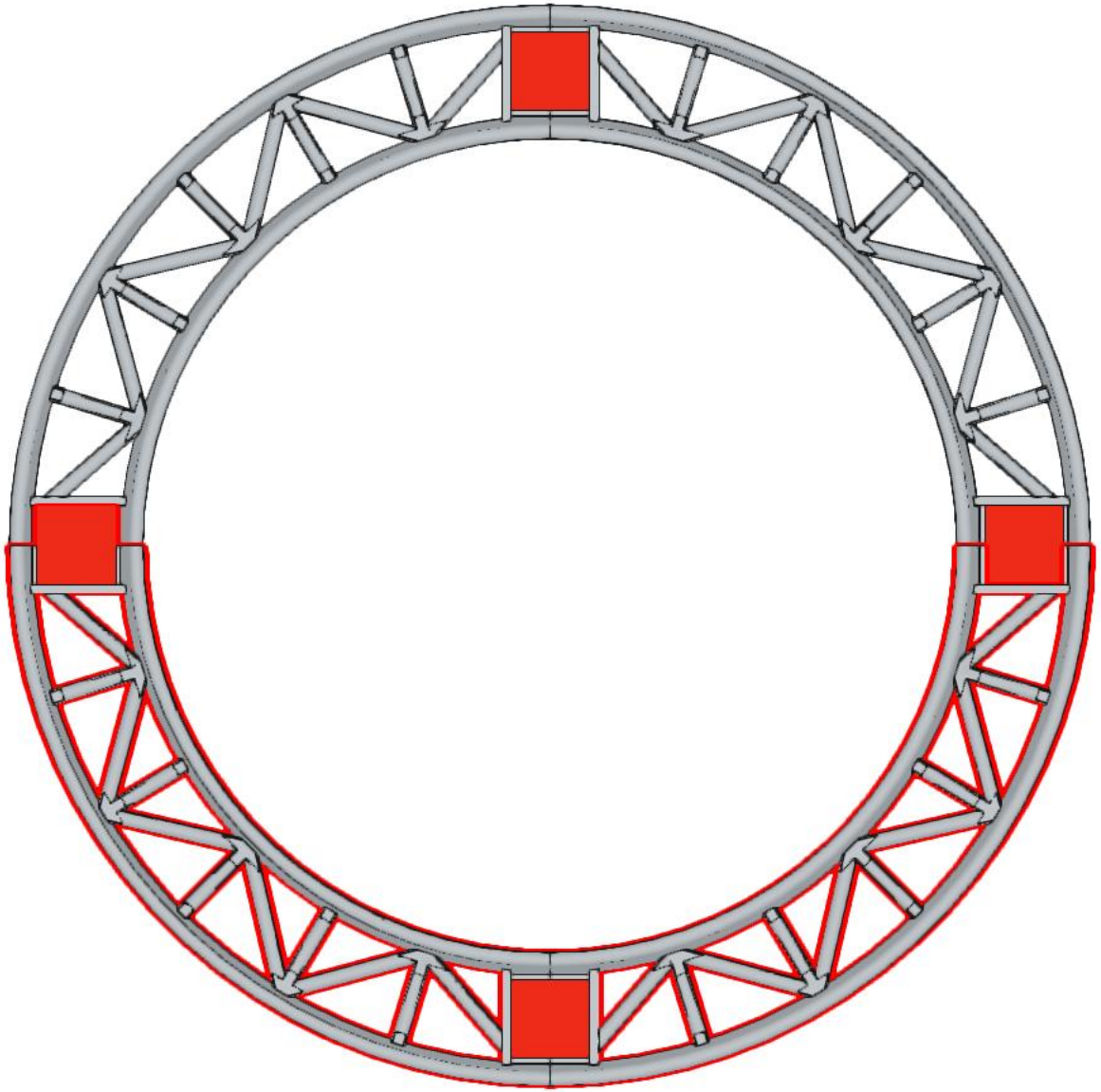

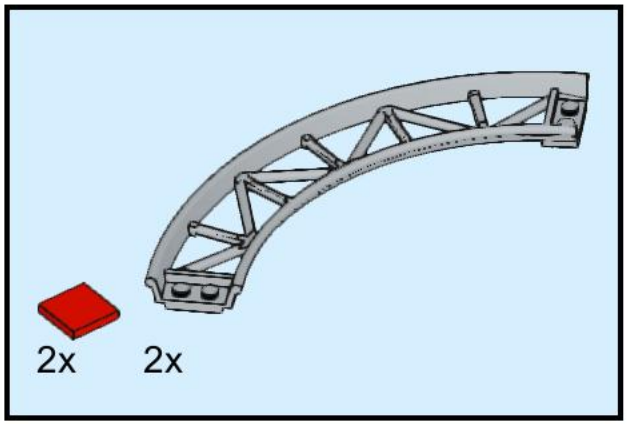

159

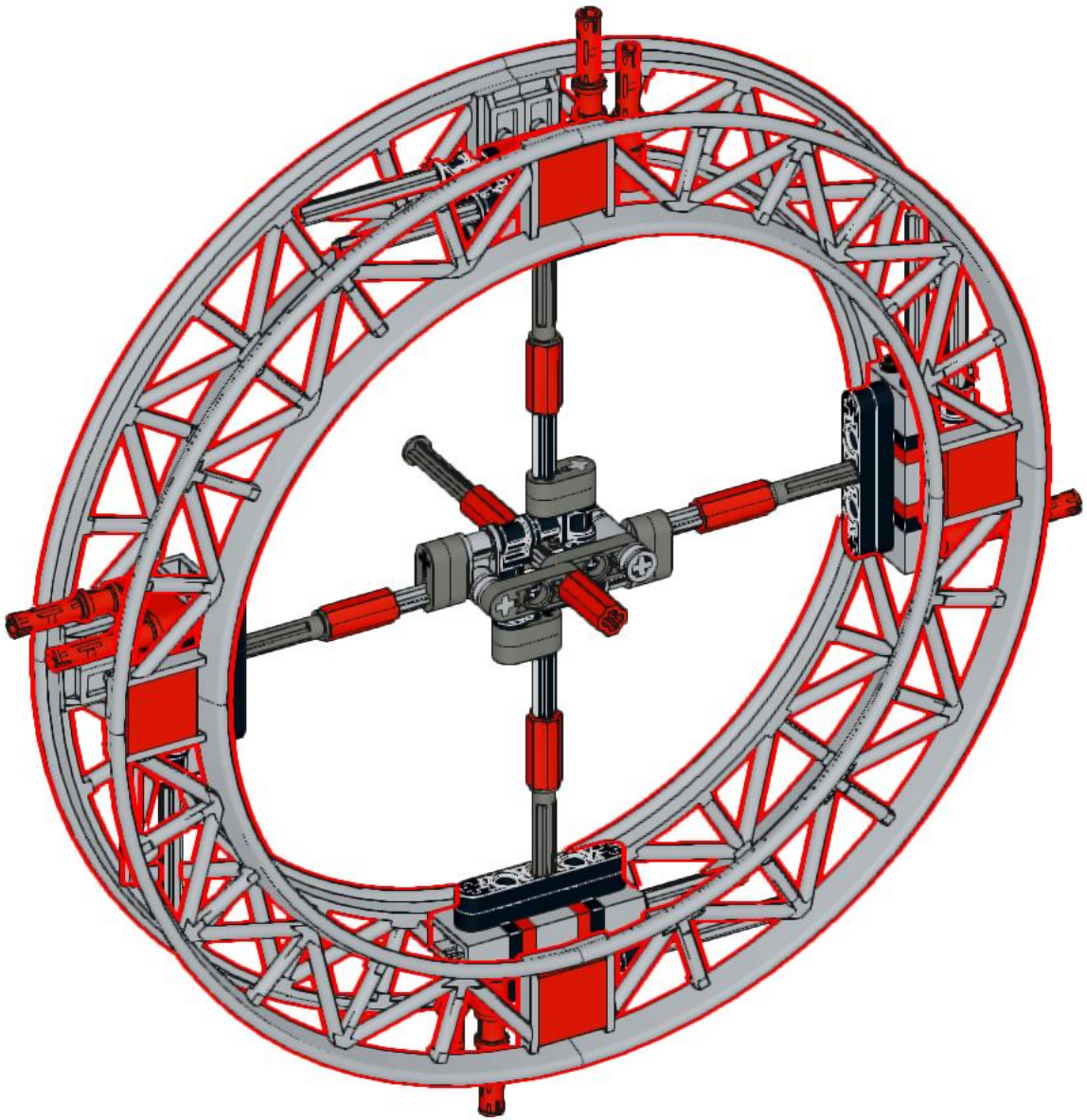

160

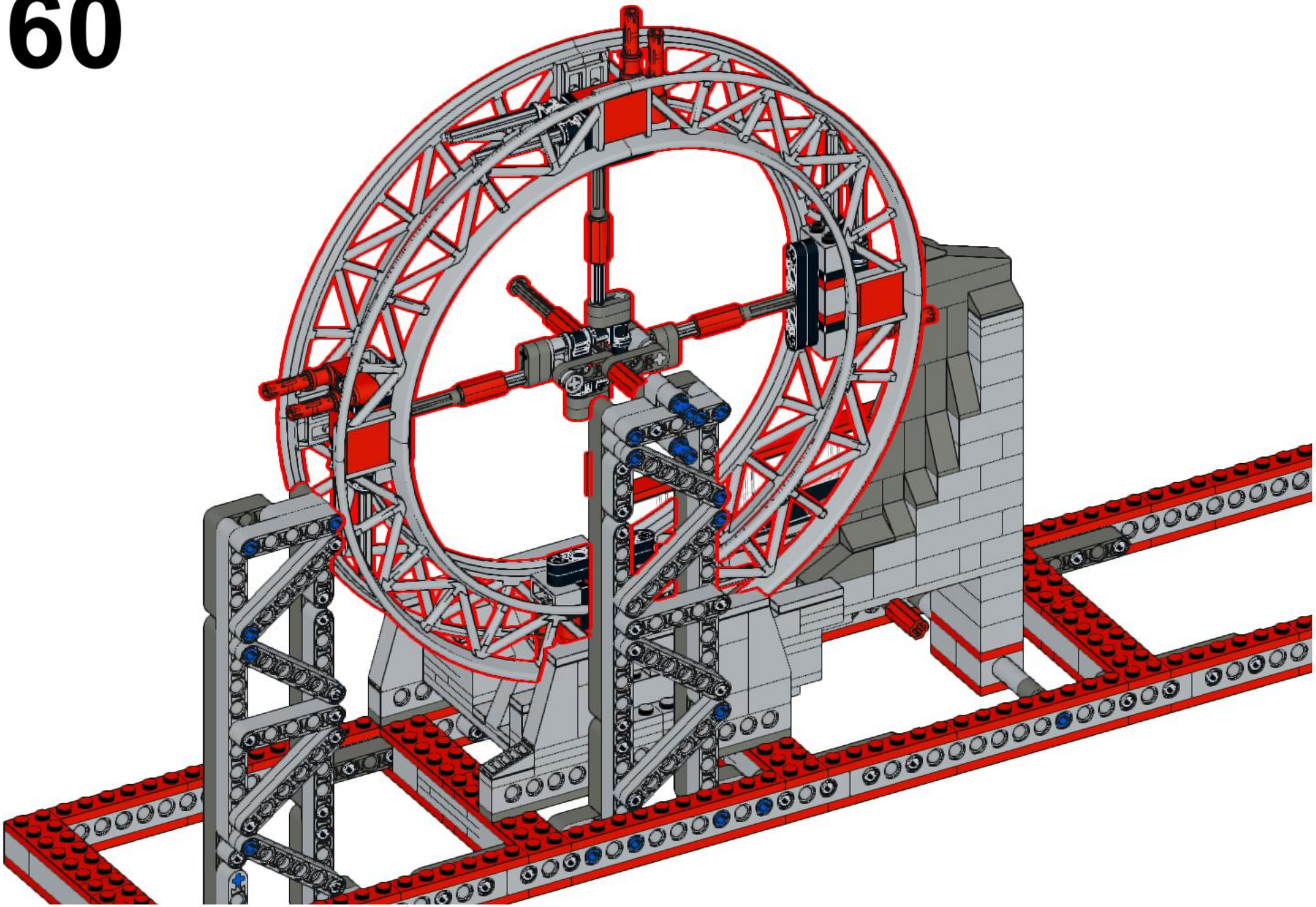

161

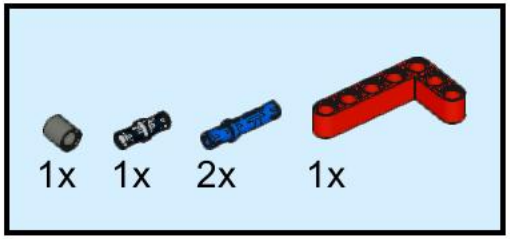

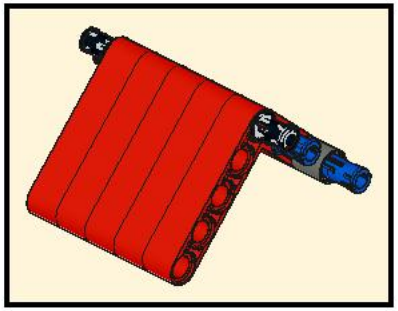

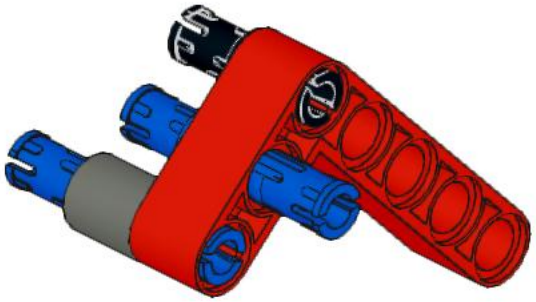

162

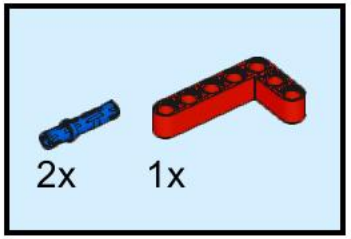

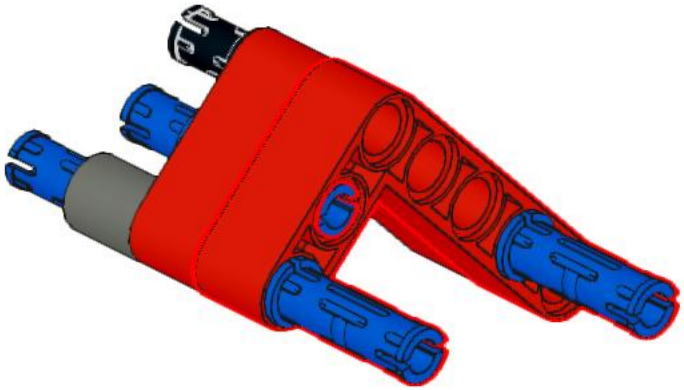

163

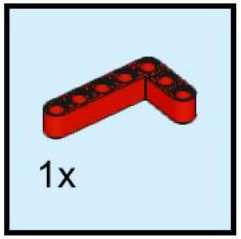

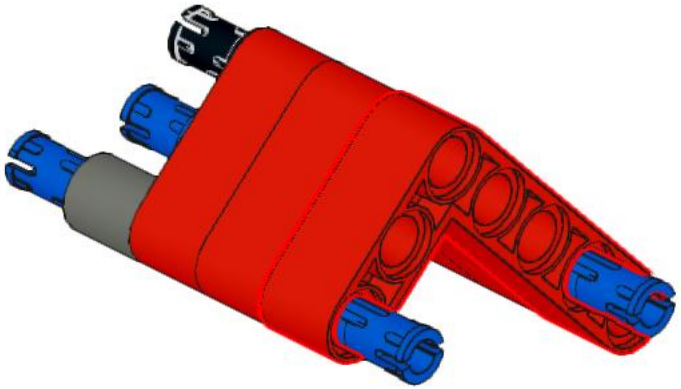

164

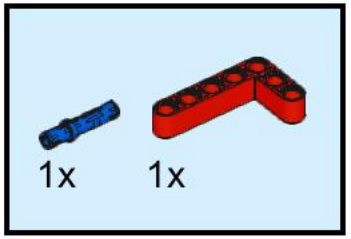

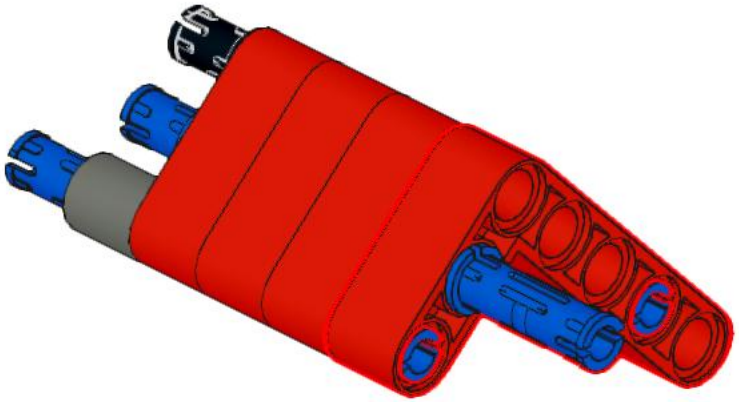

165

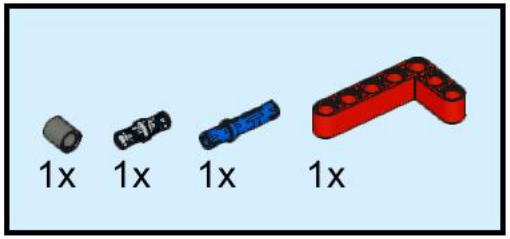

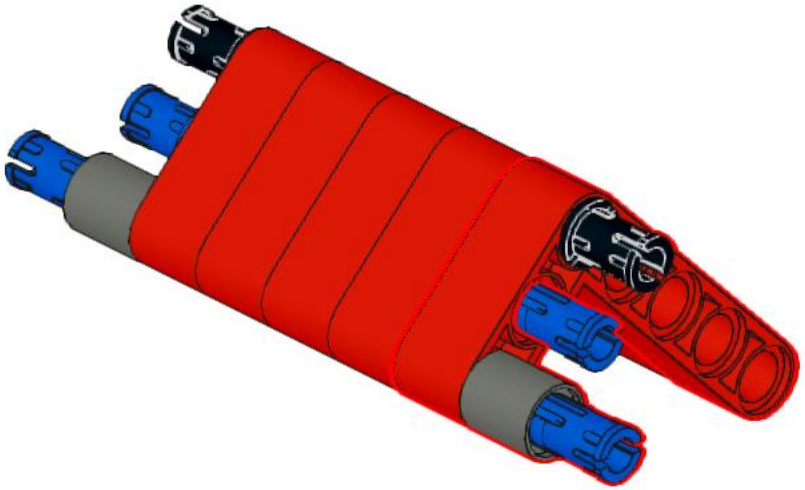

166

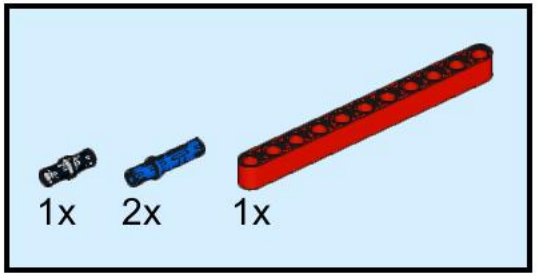

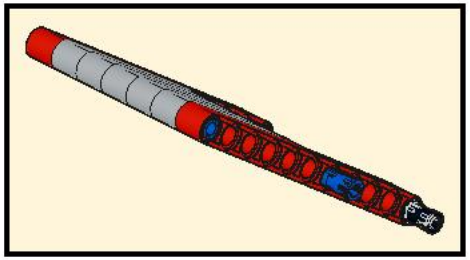

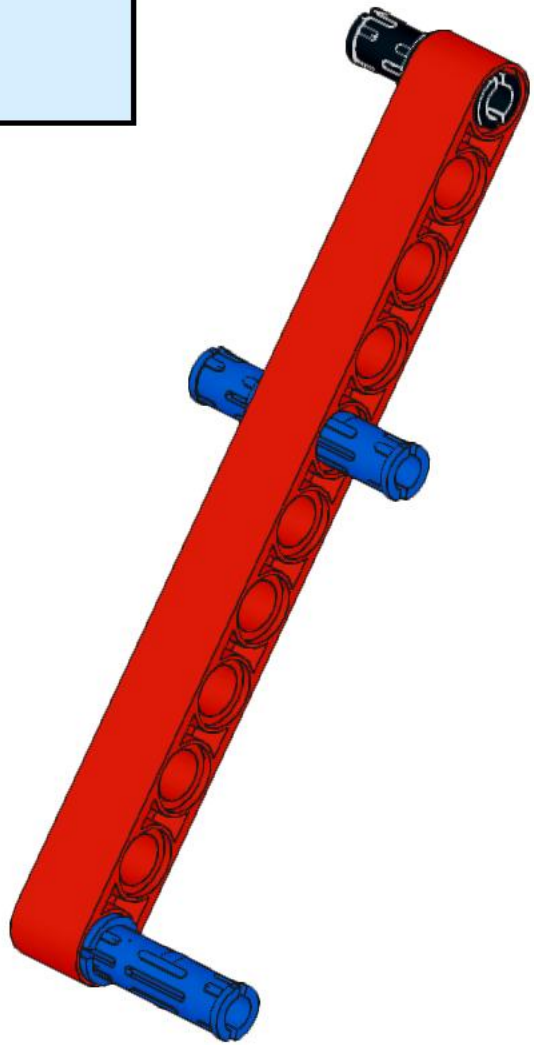

167

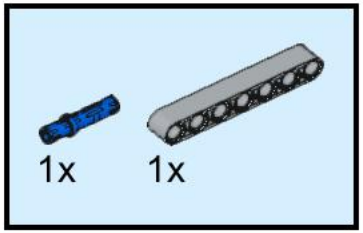

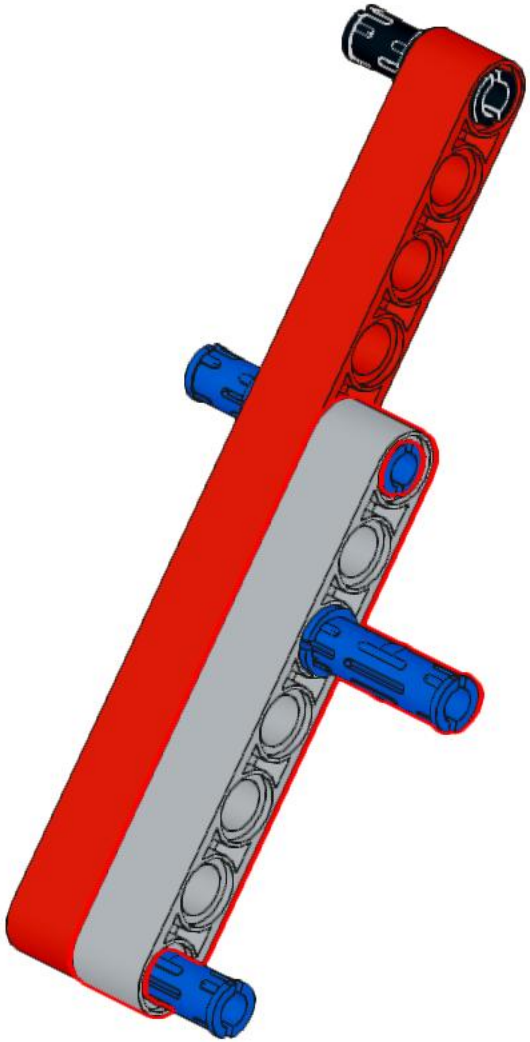

168

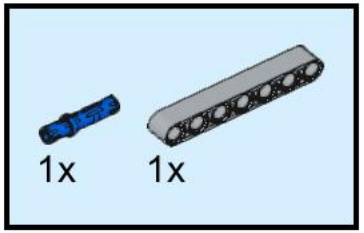

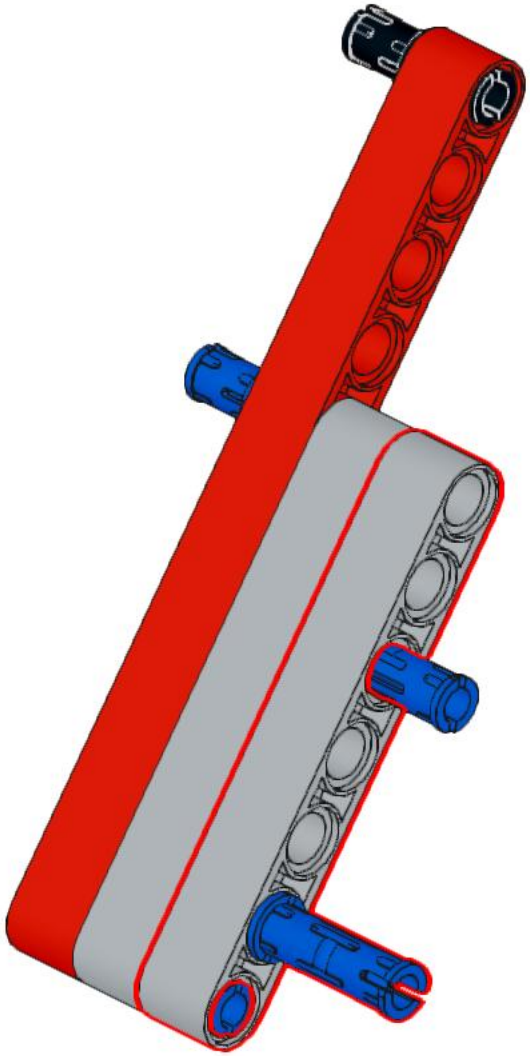

169

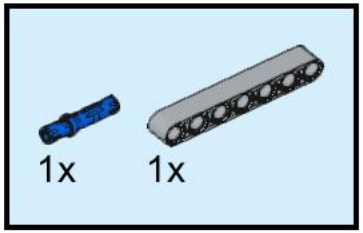

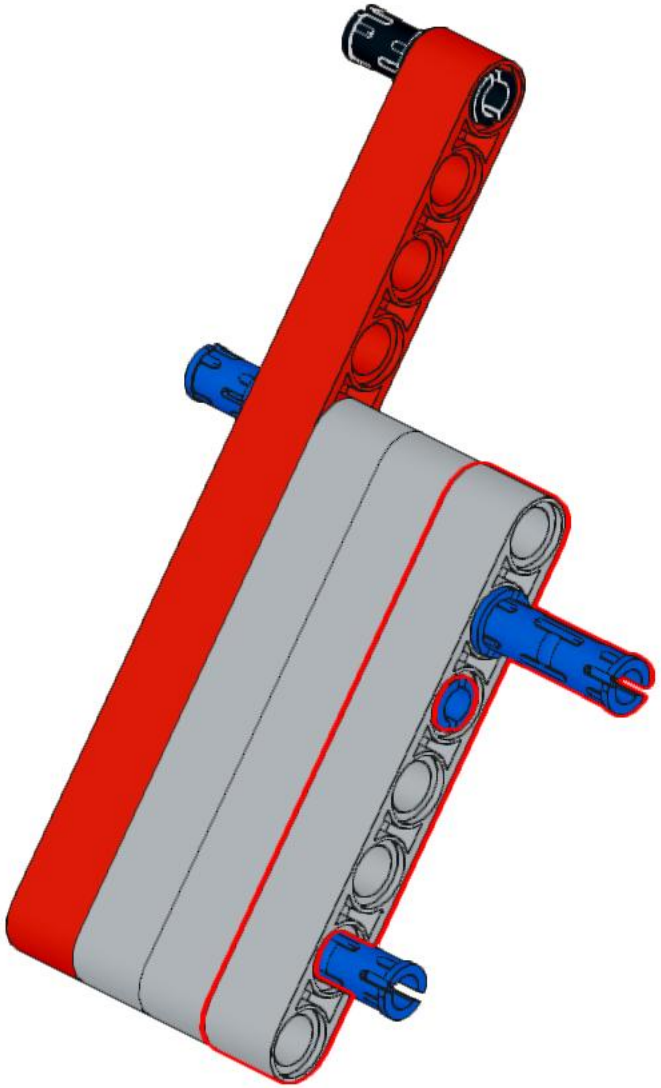

170

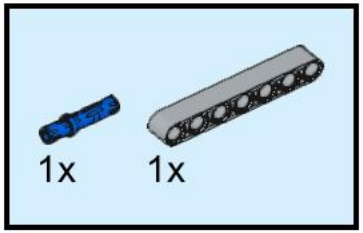

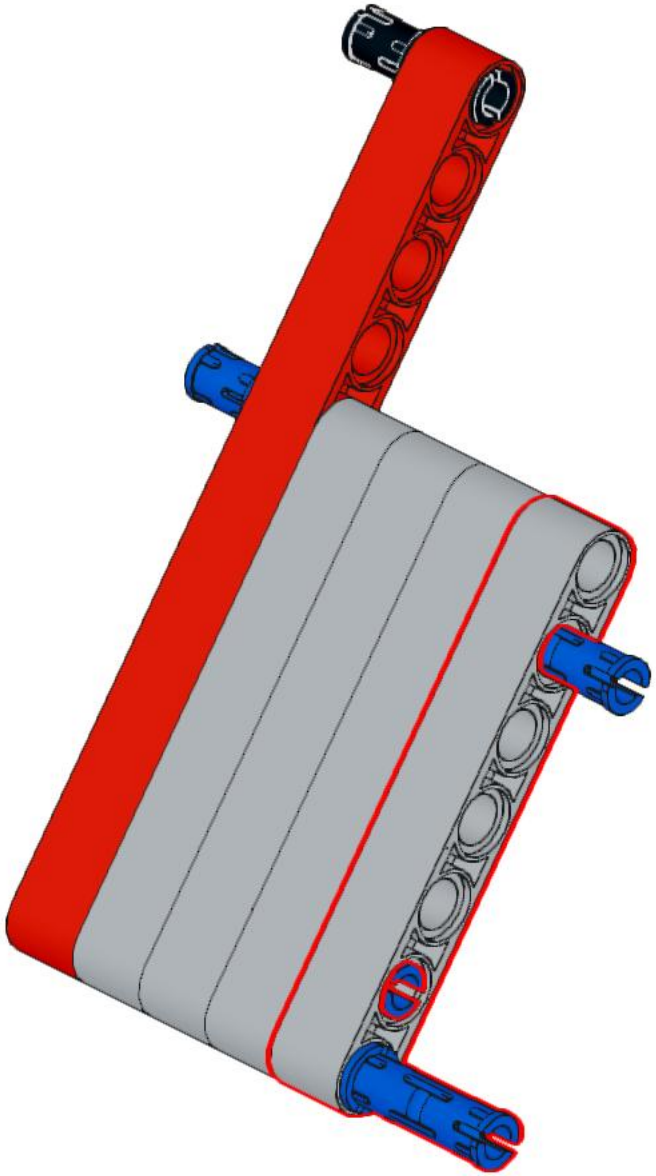

171

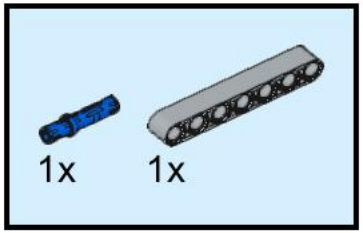

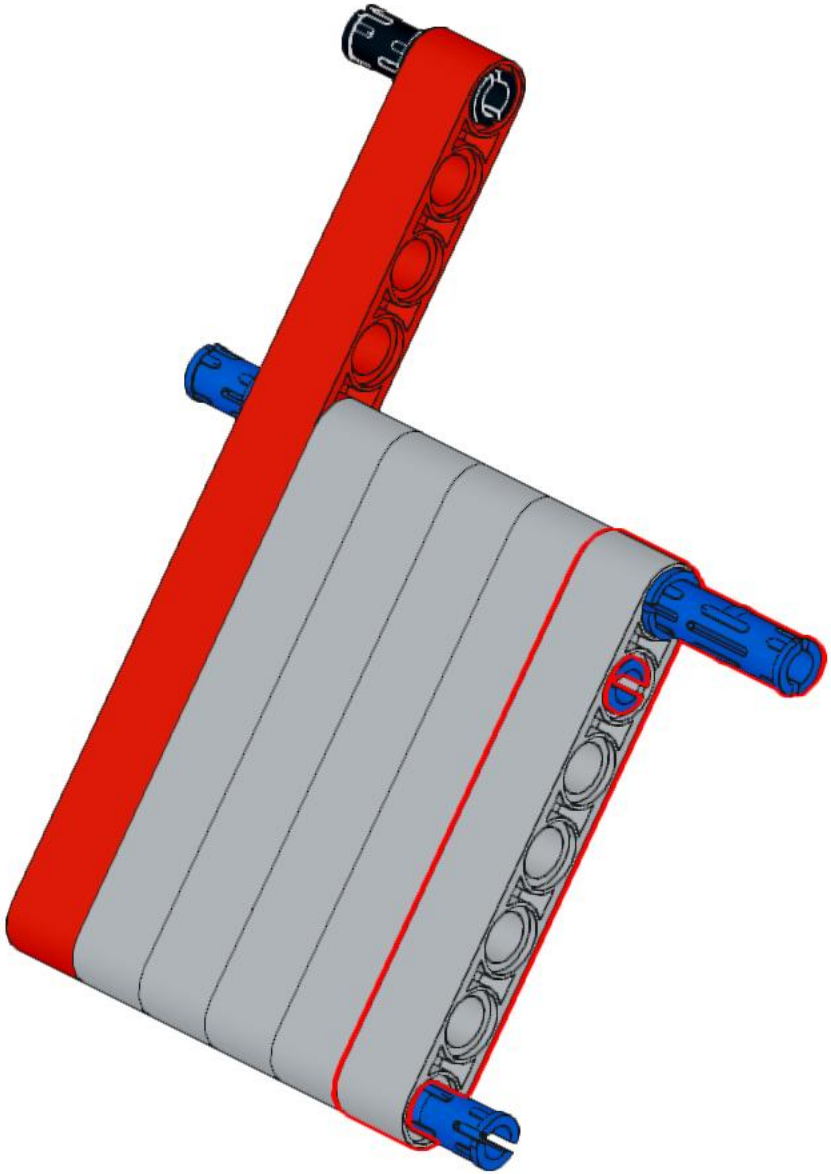

172

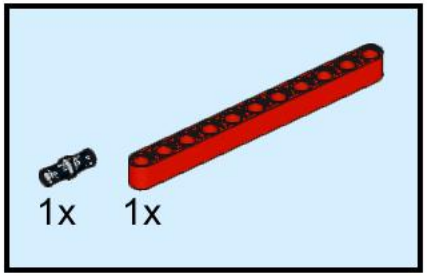

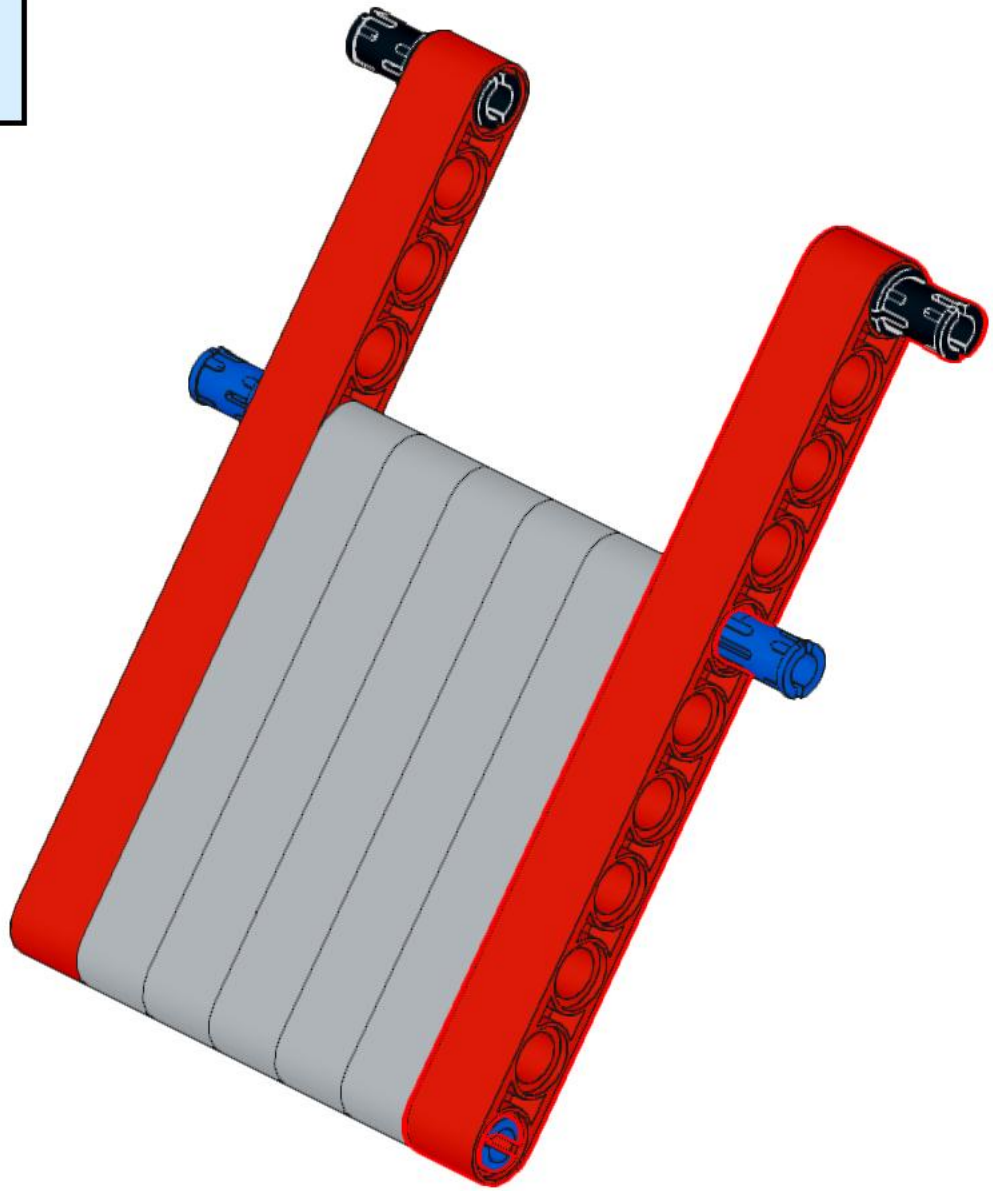

173

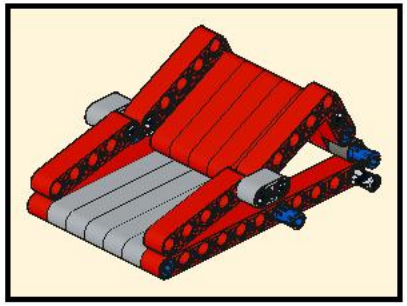

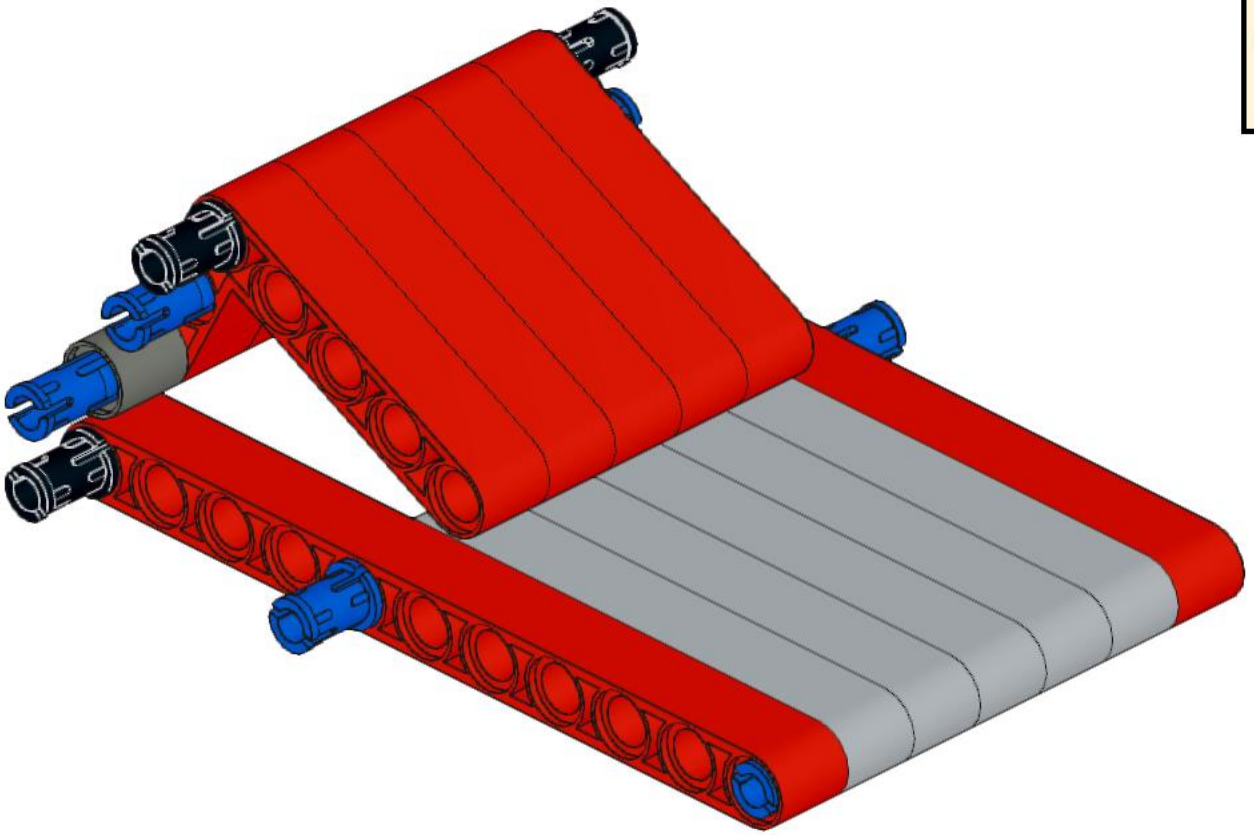

174

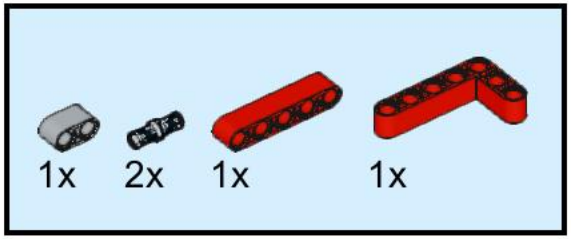

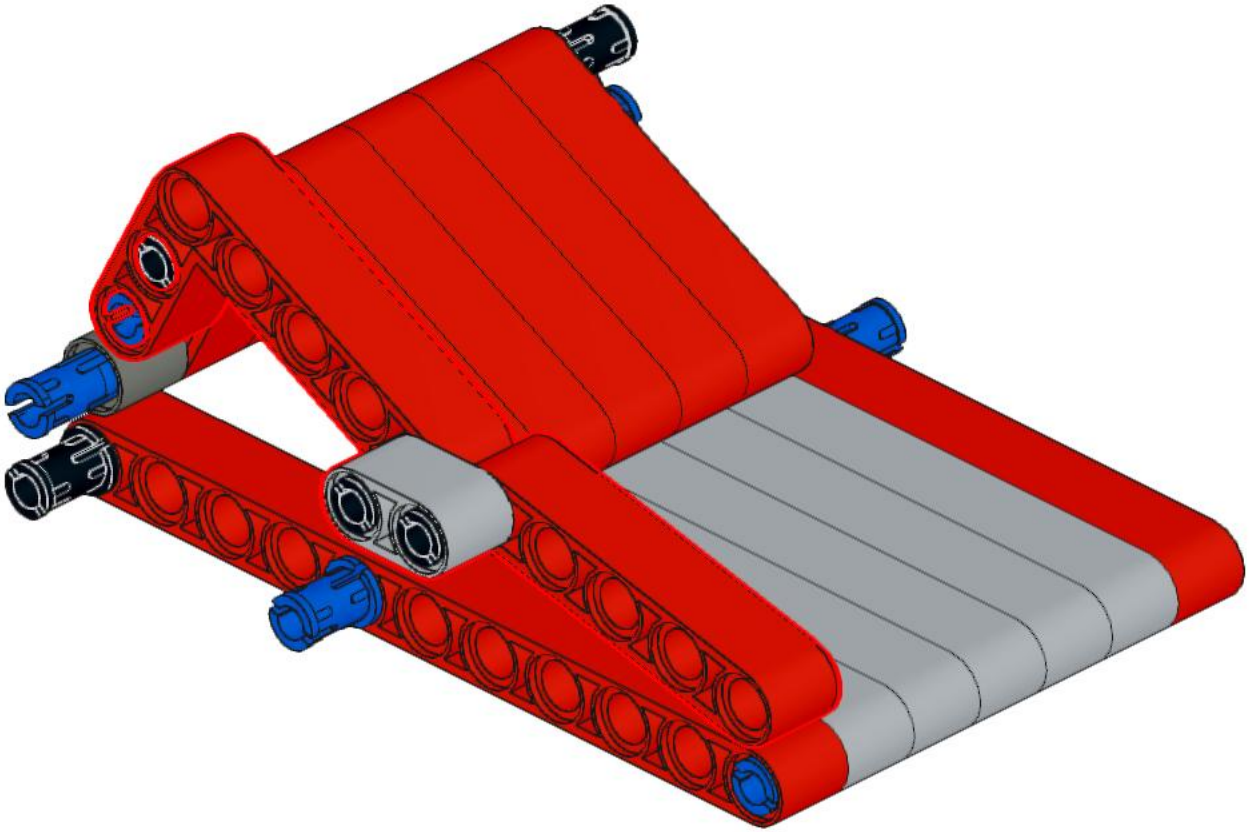

175

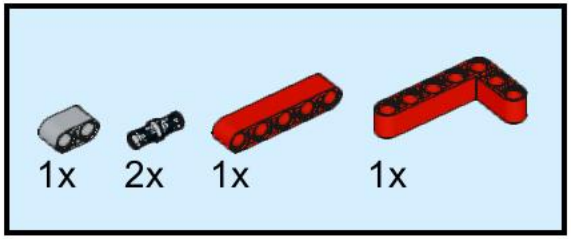

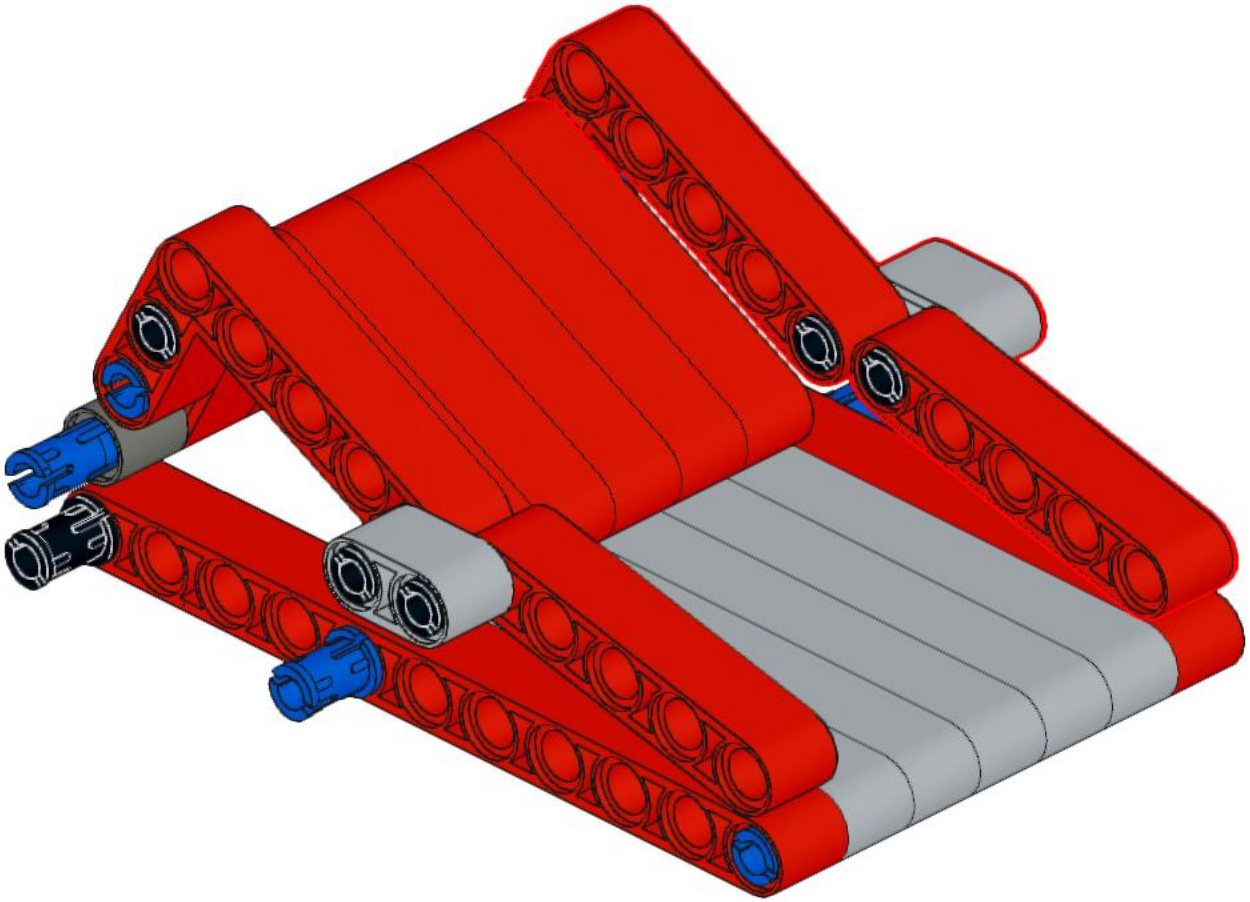

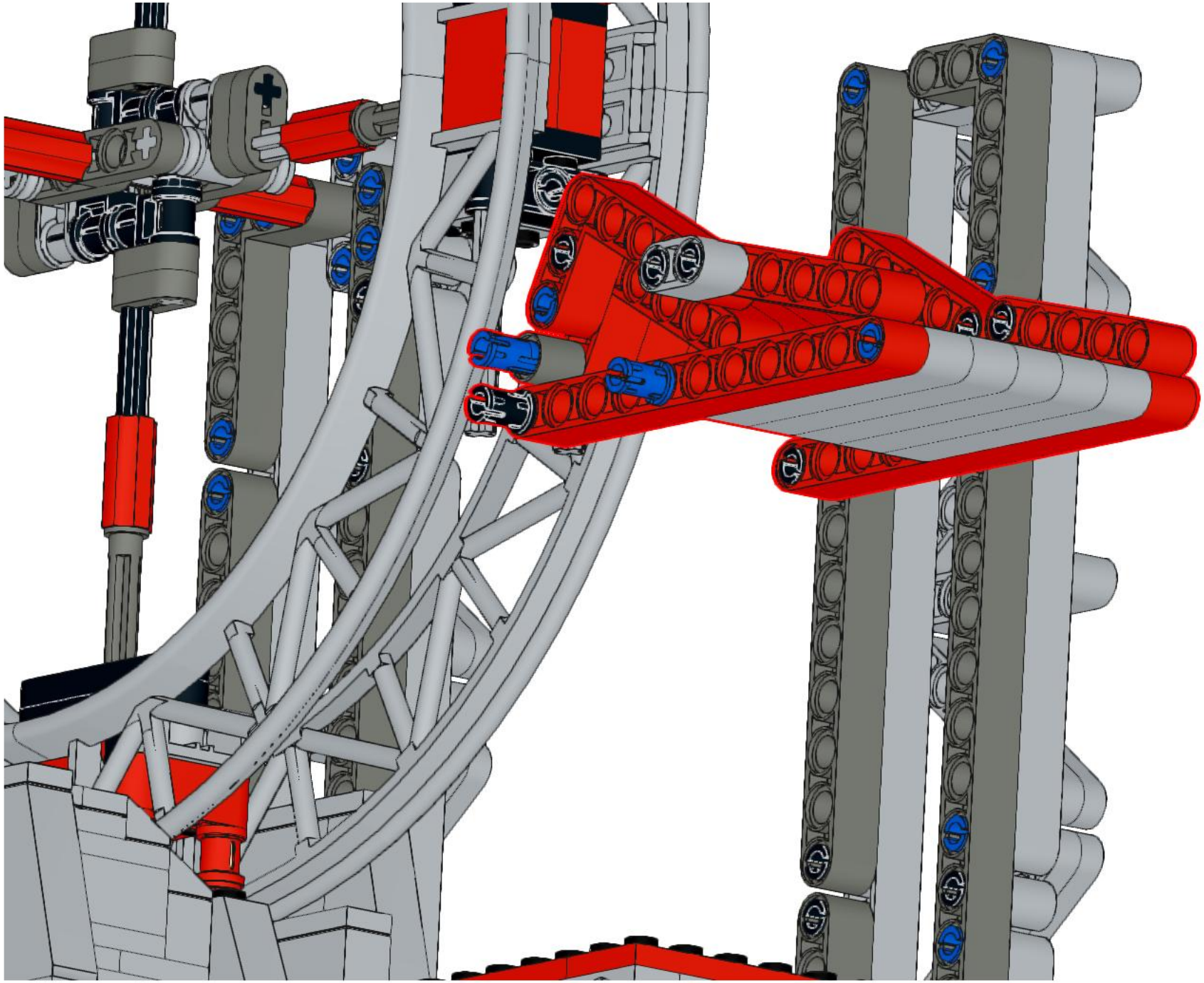

177

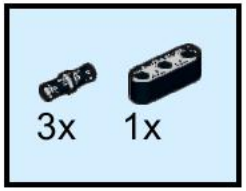

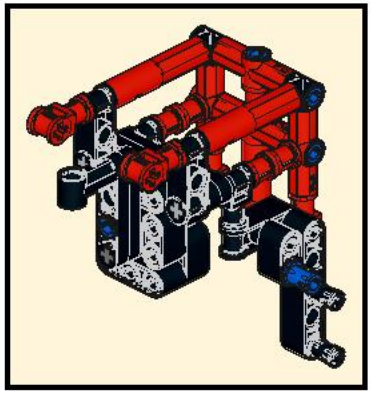

178

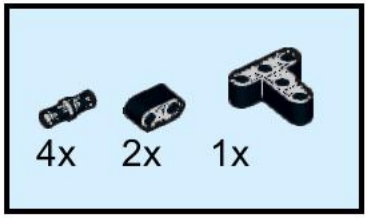

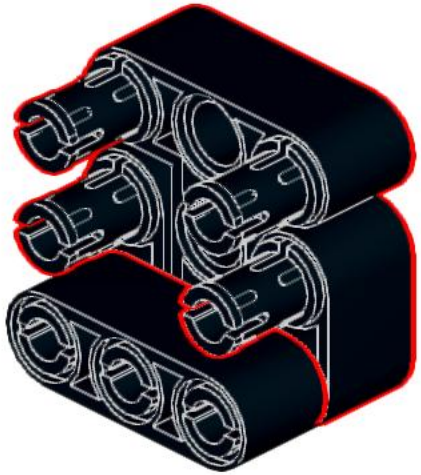

179

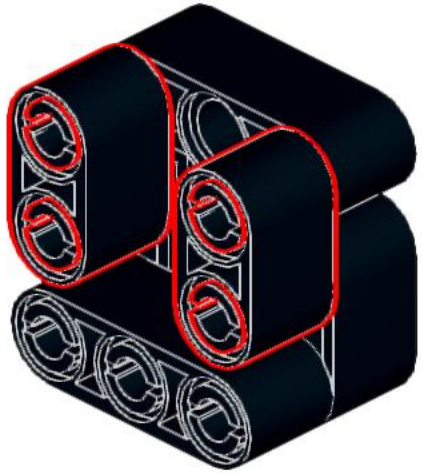

180

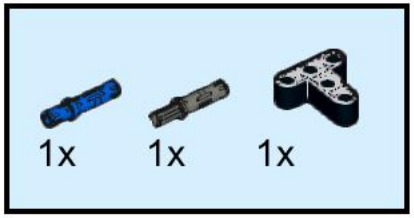

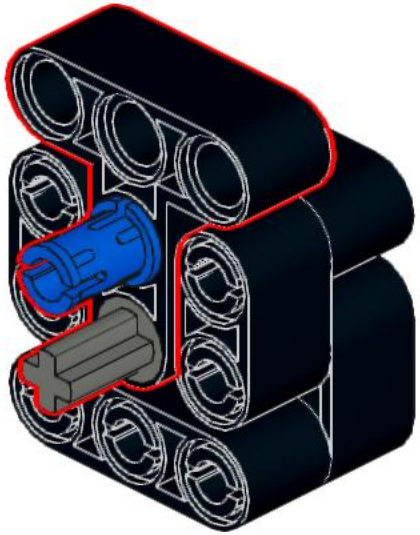

181

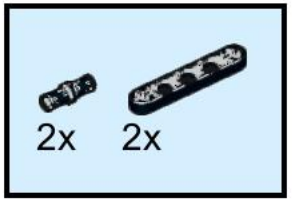

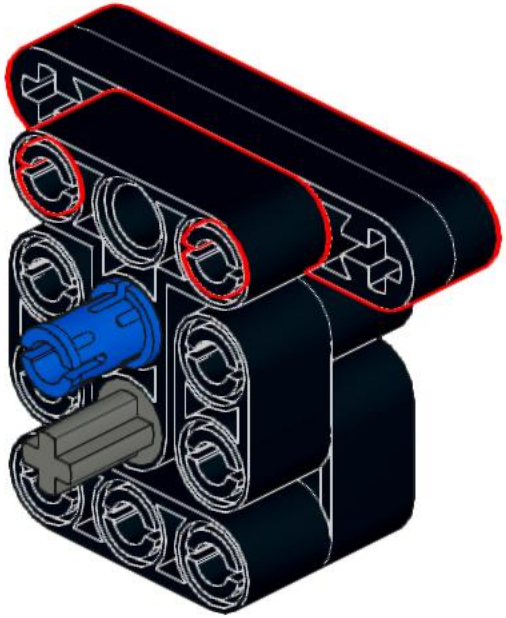

182

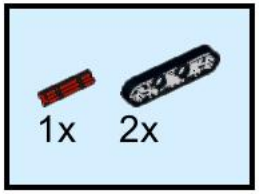

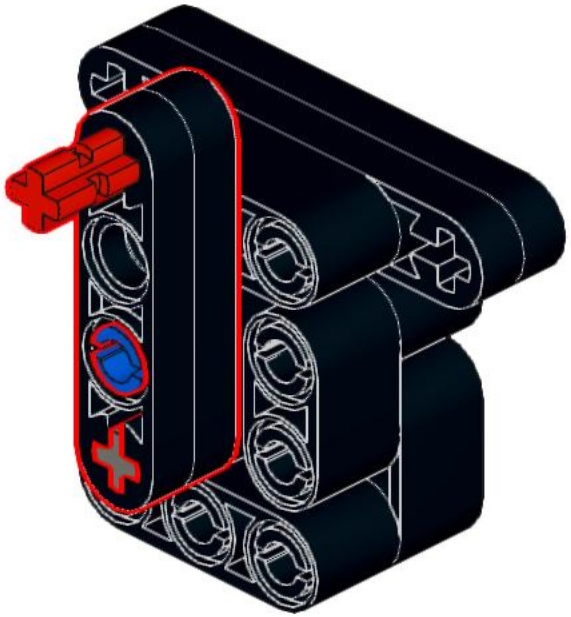

183

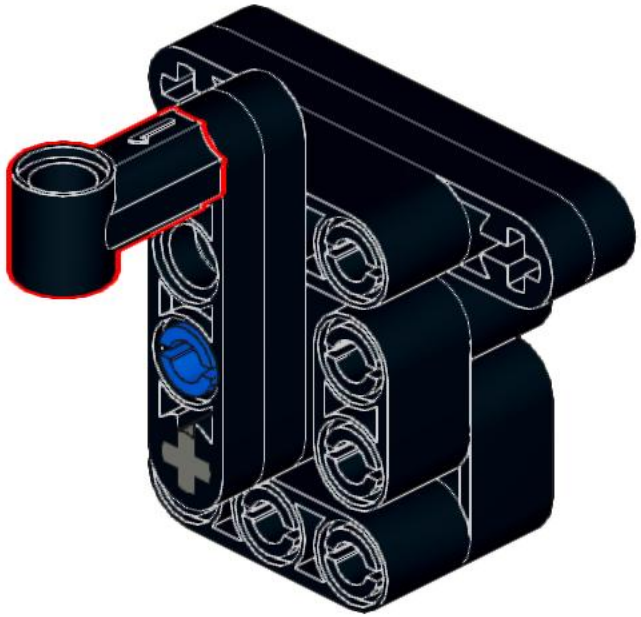

184

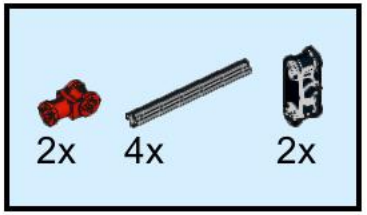

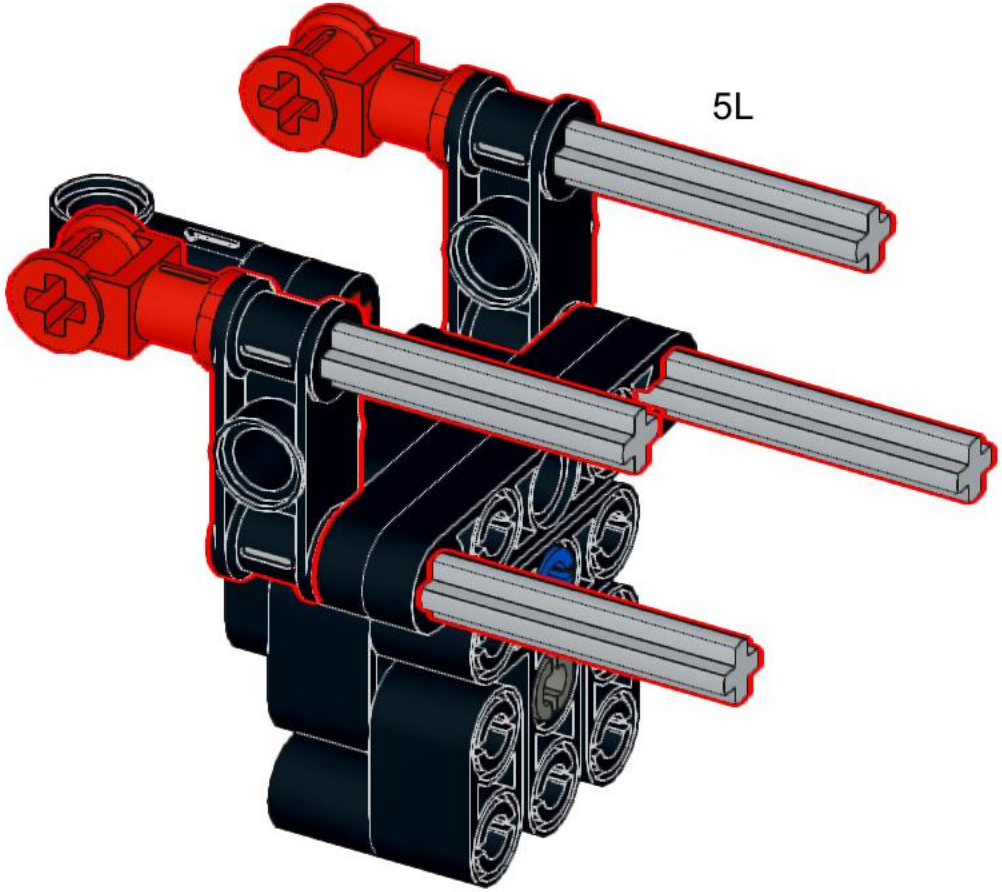

185

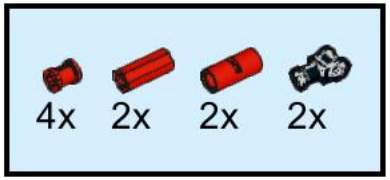

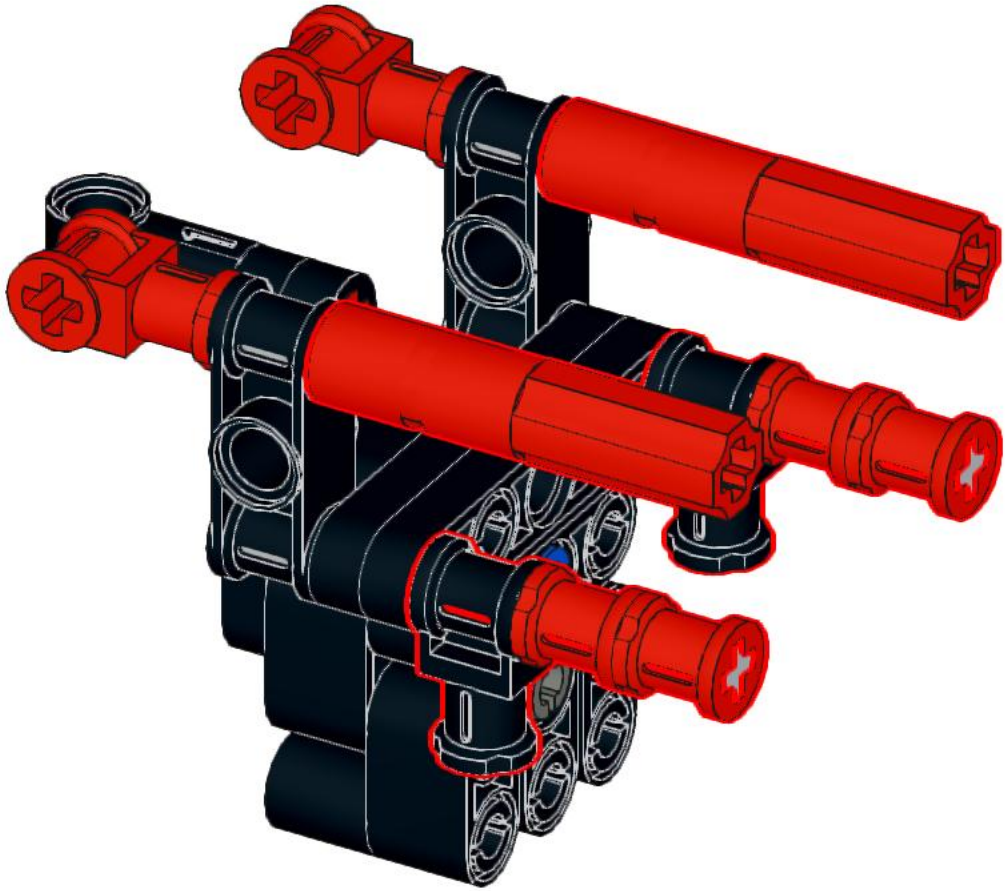

186

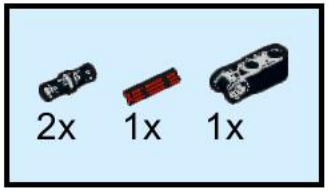

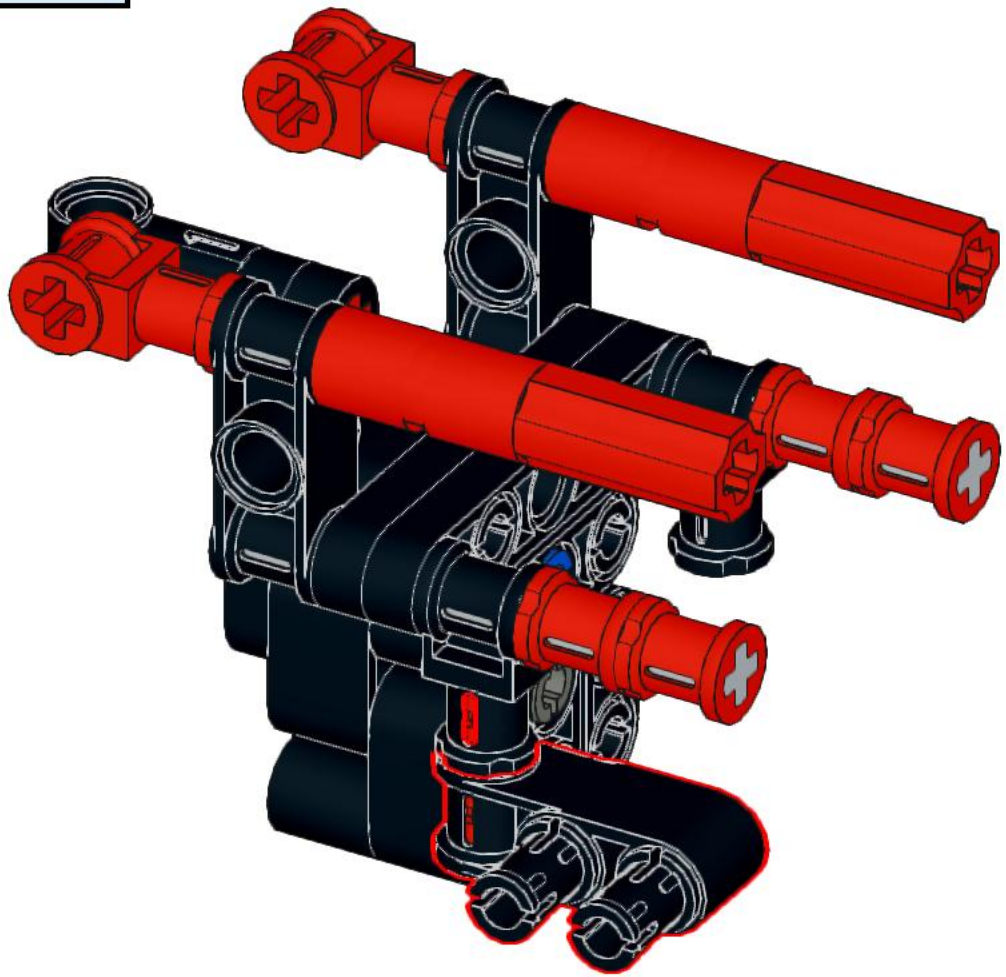

187

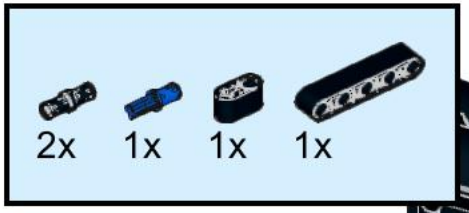

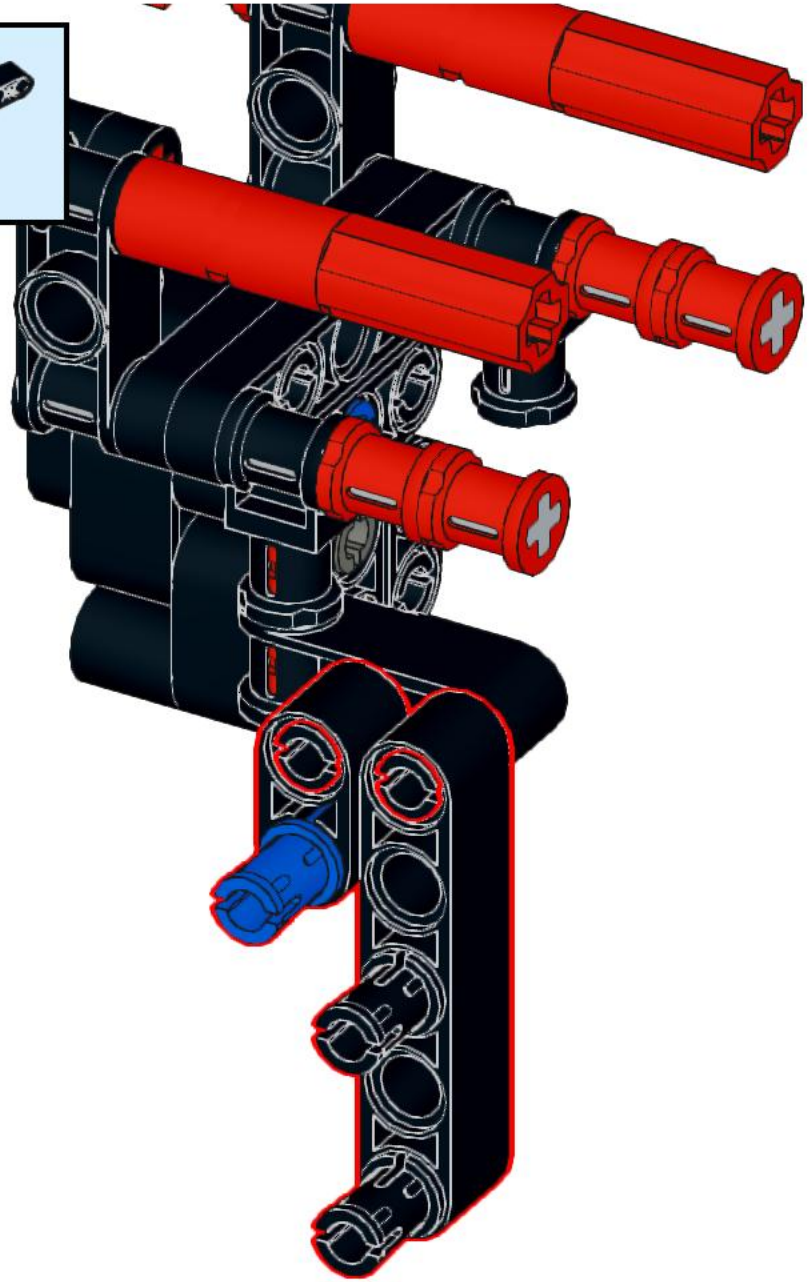

188

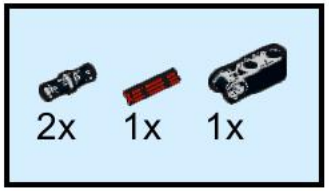

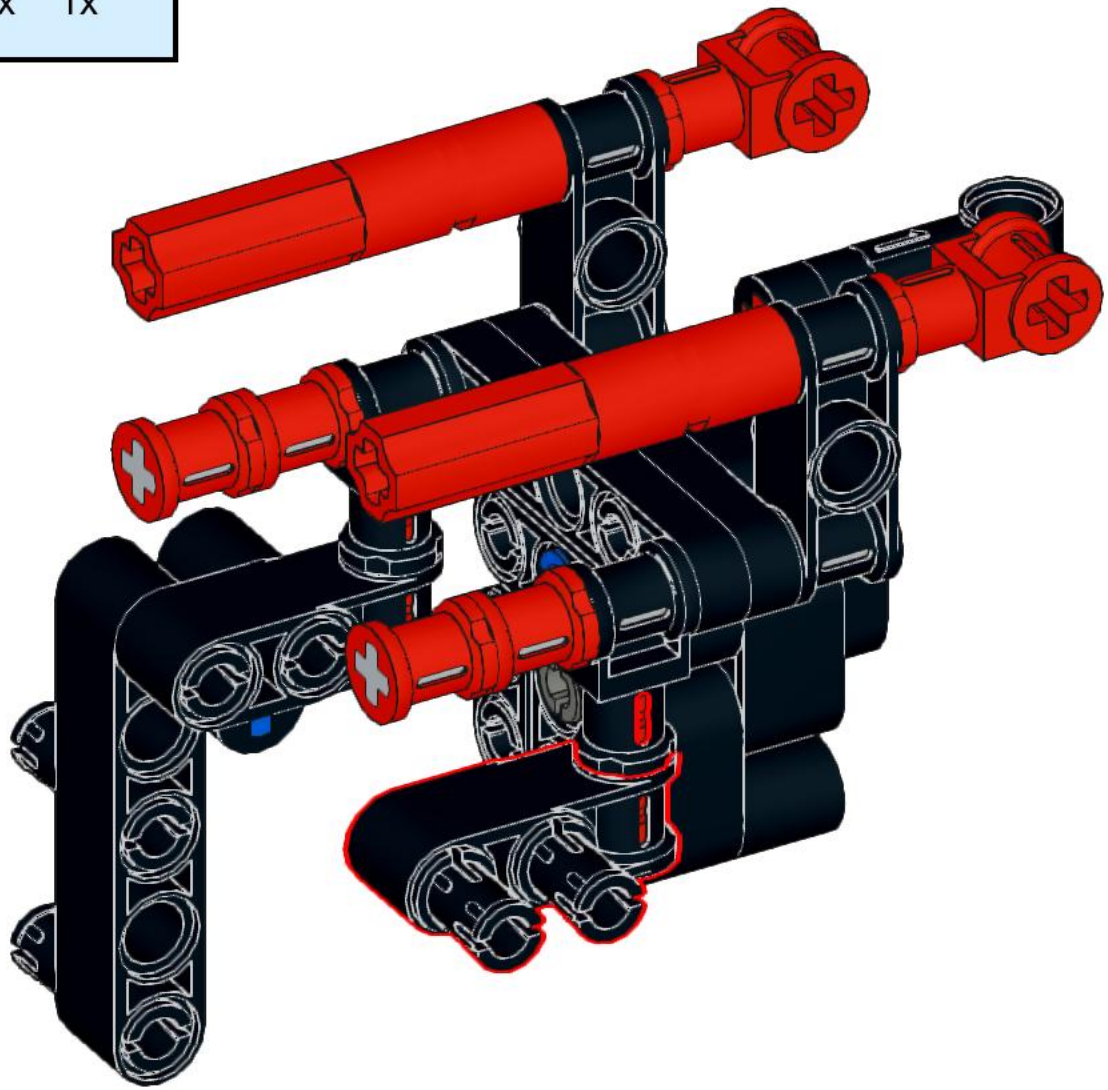

189

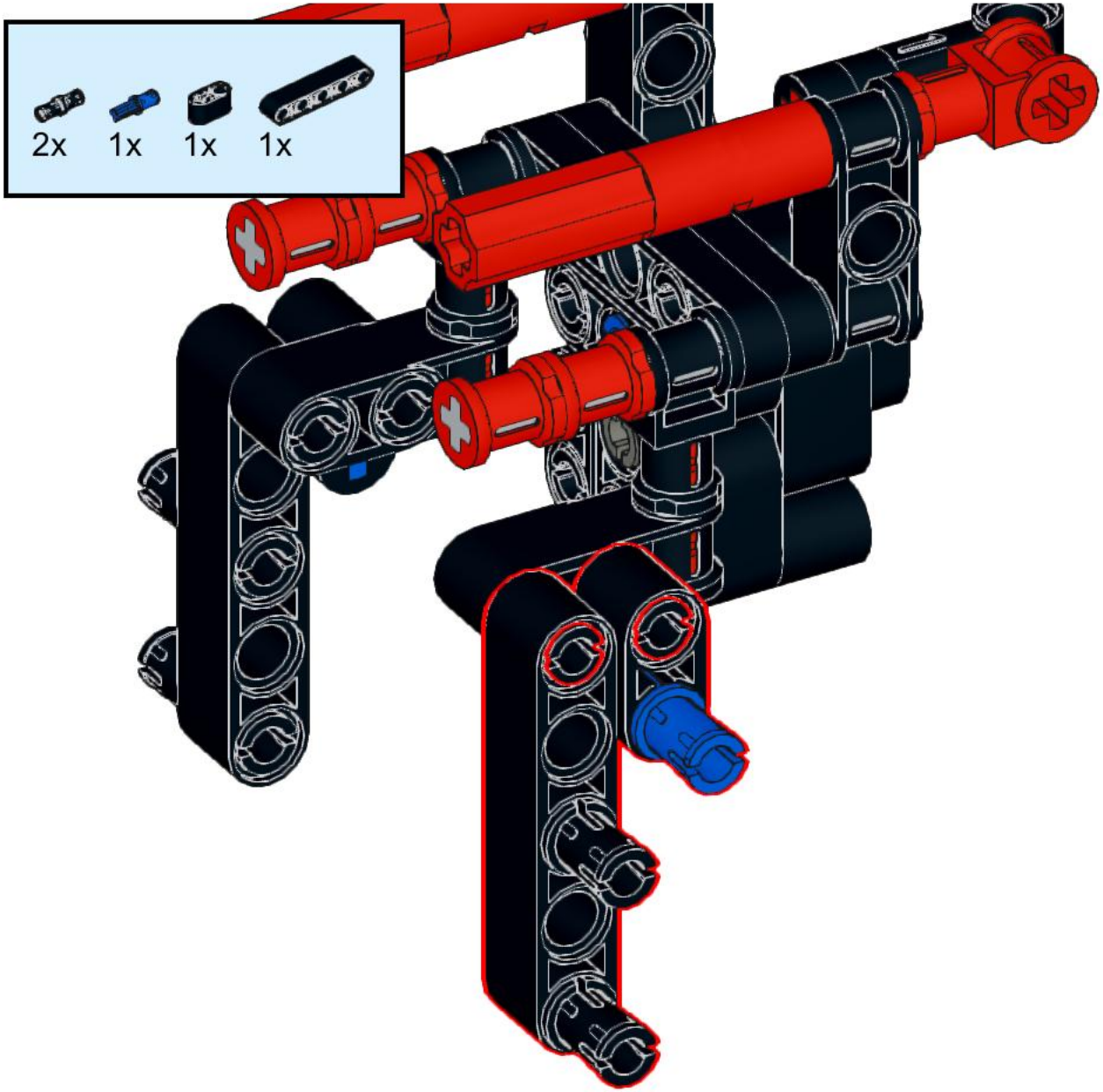

190

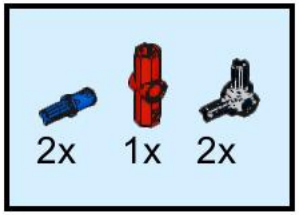

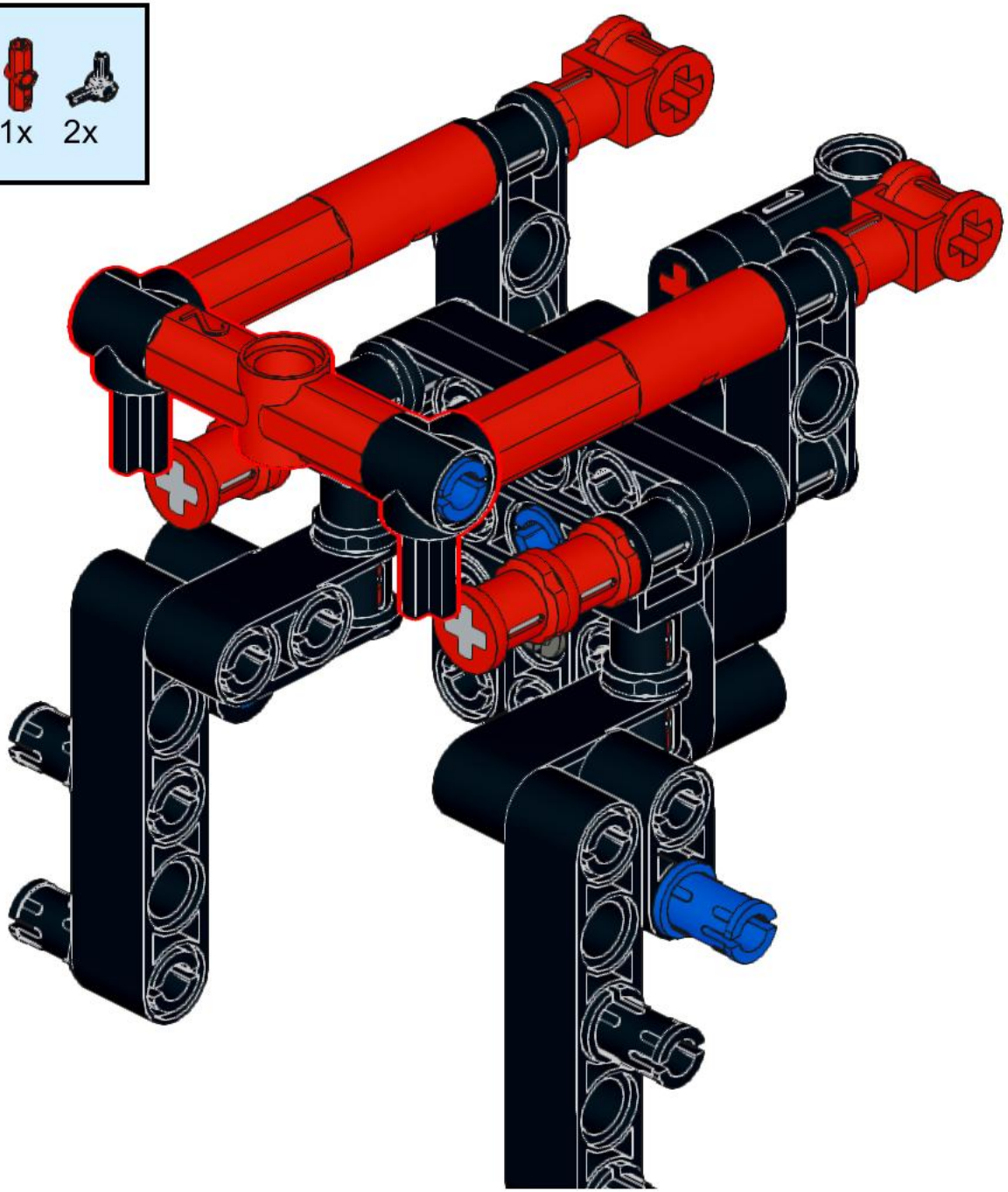

191

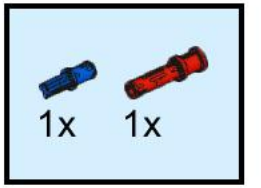

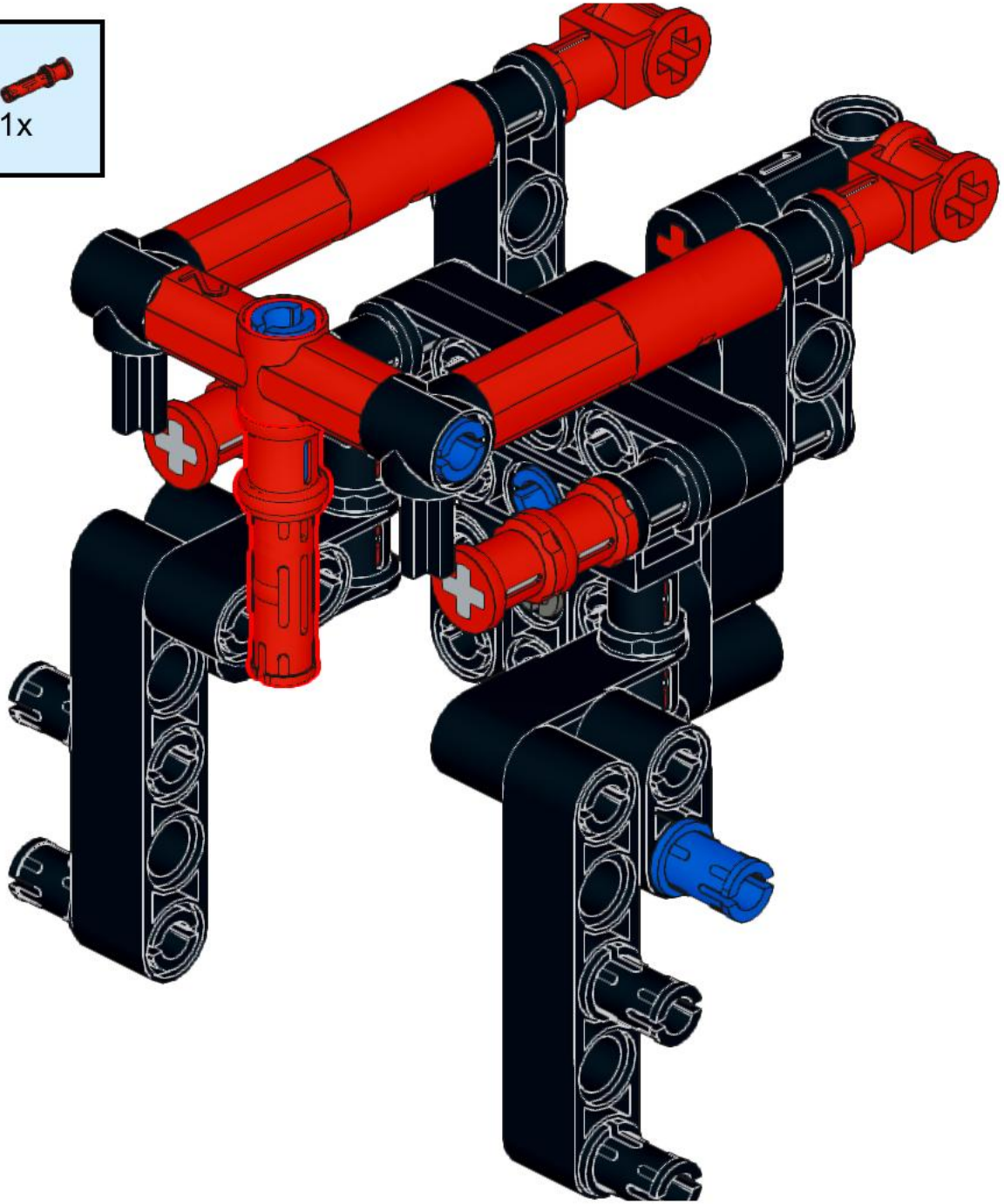

192

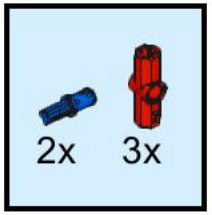

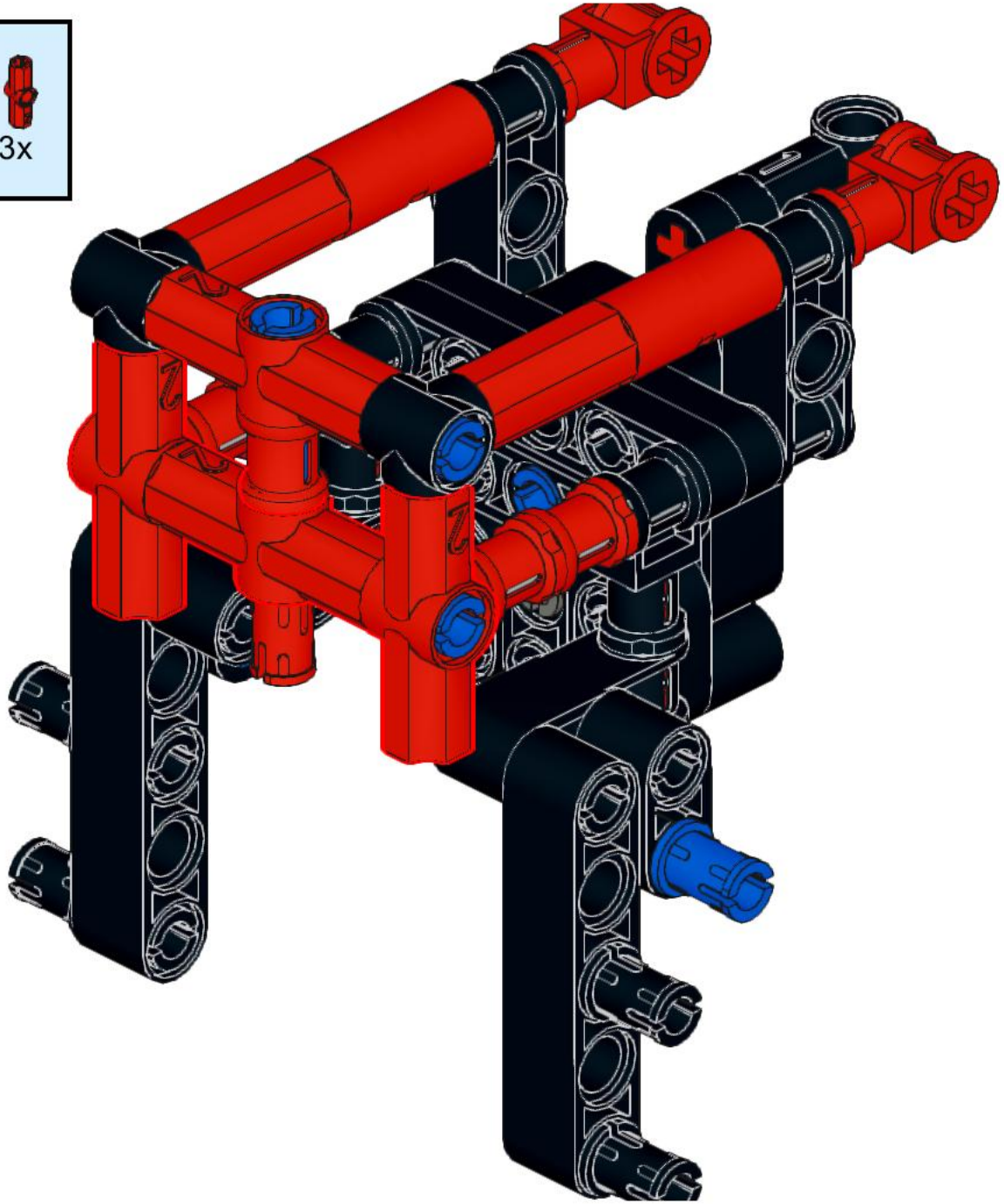

193

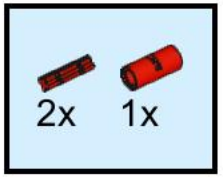

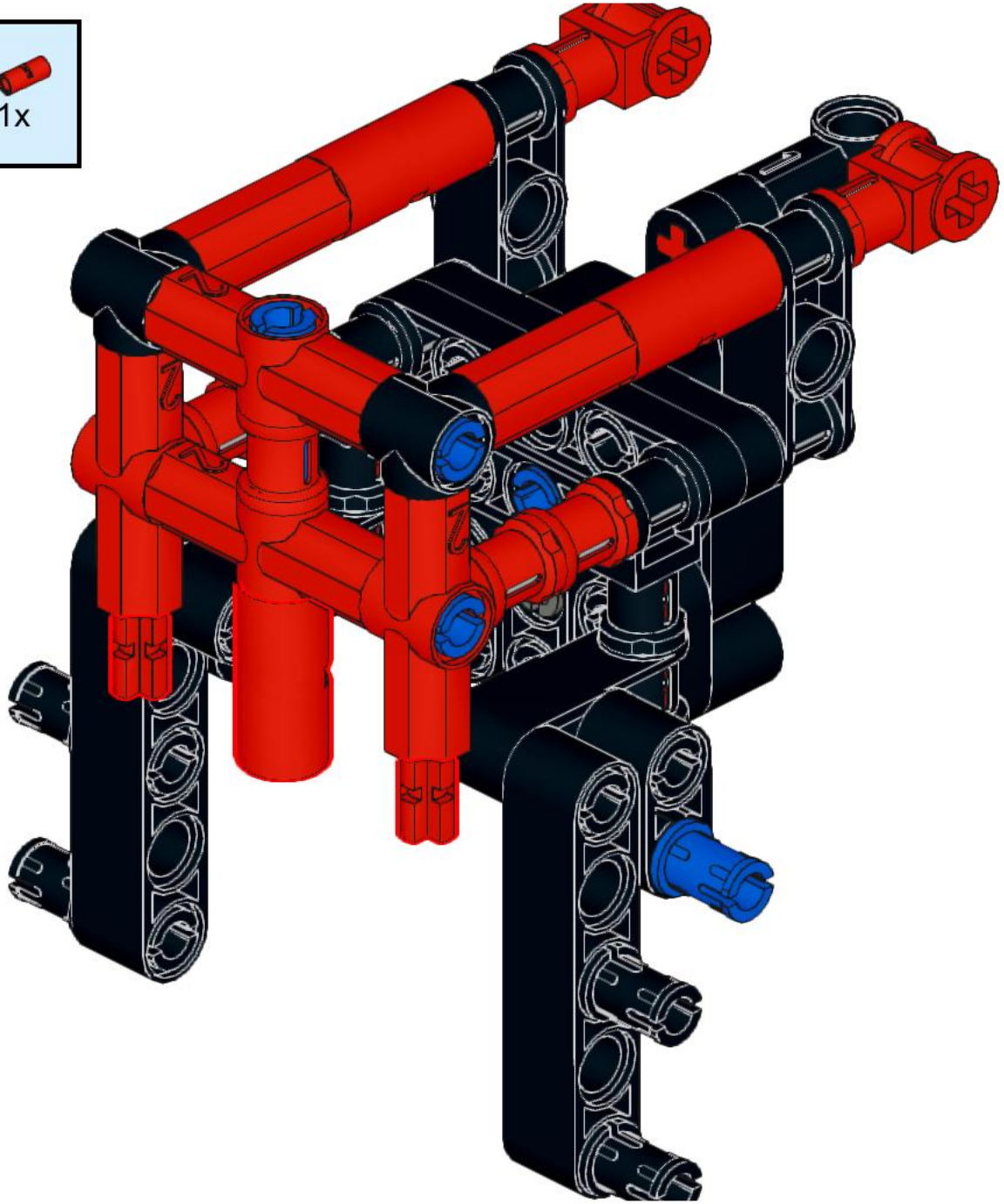

194

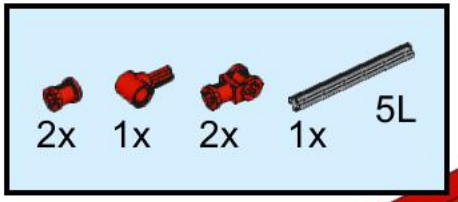

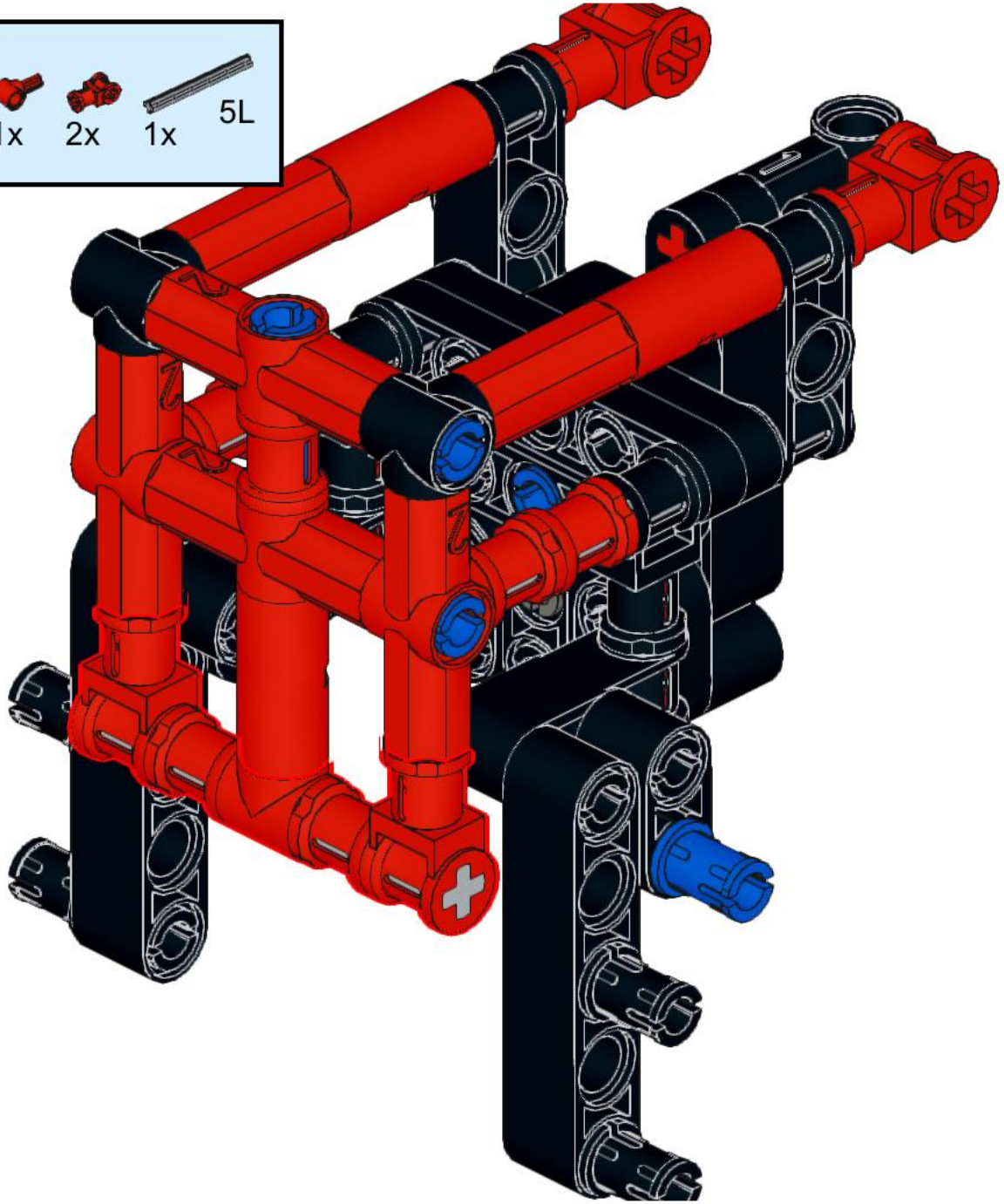

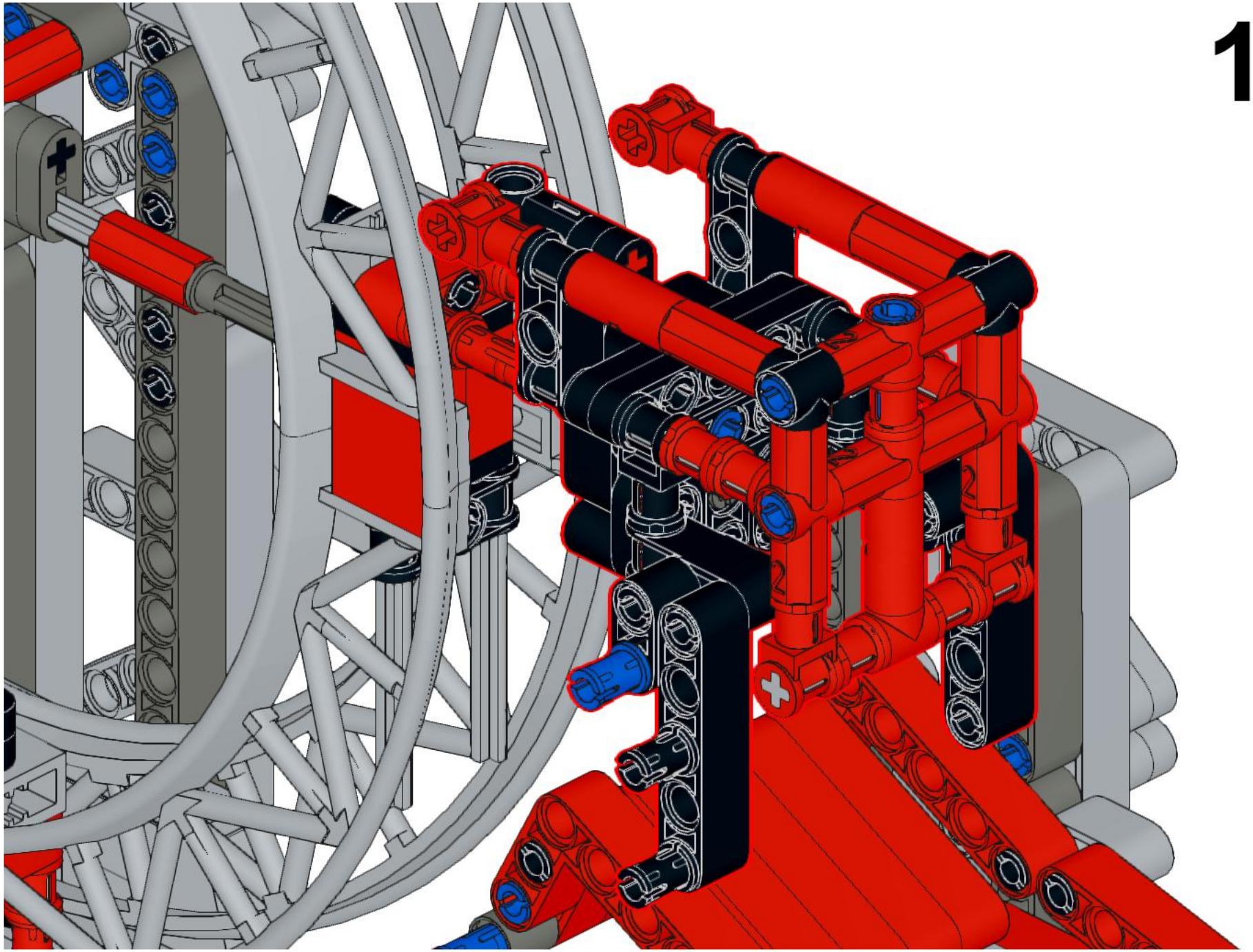

196

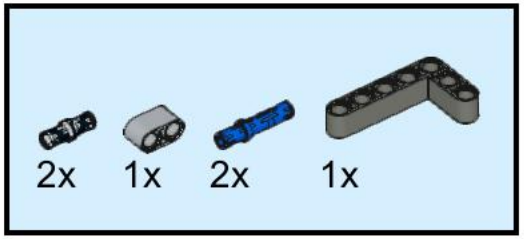

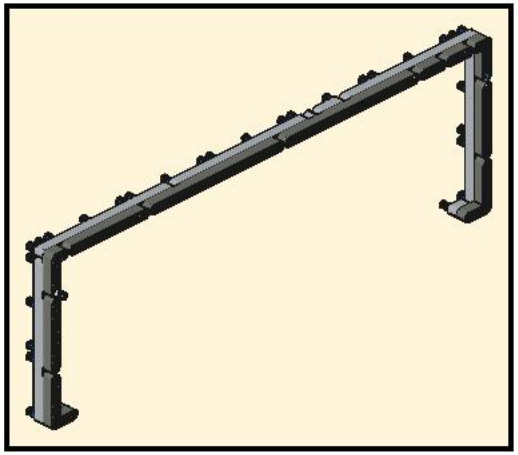

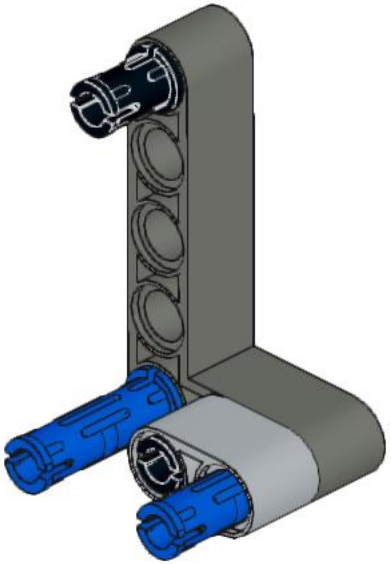

197

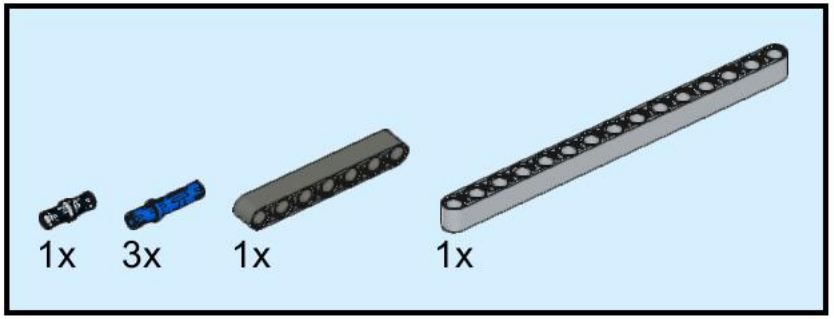

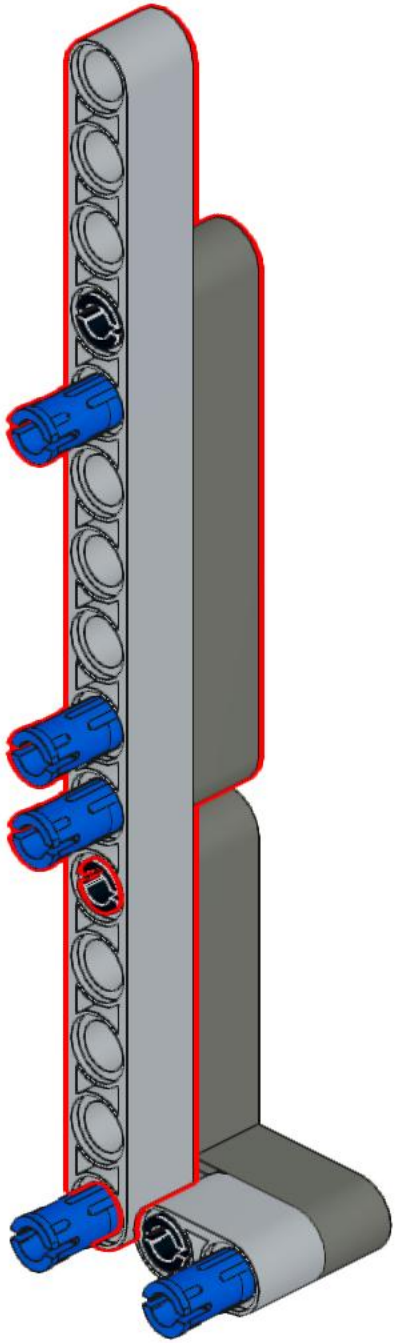

198

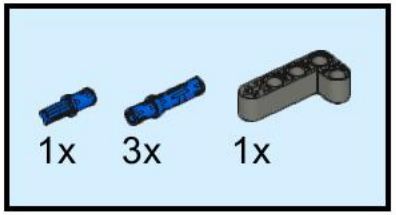

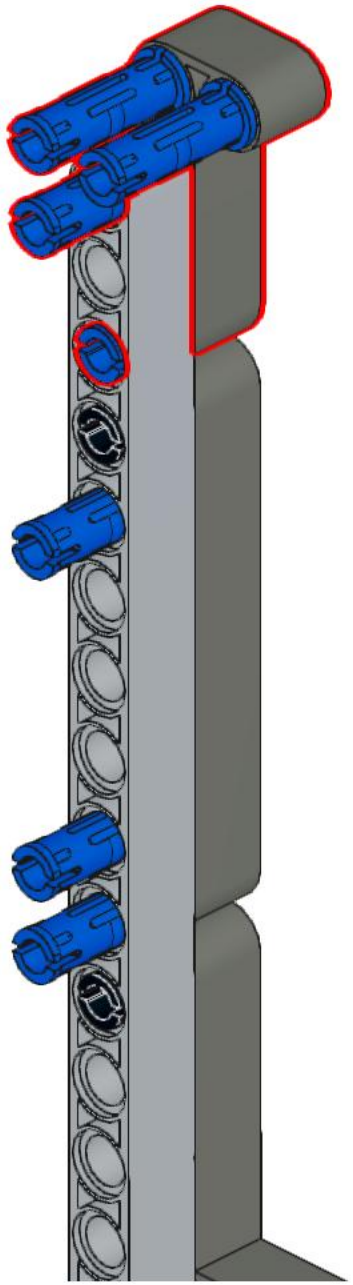

199

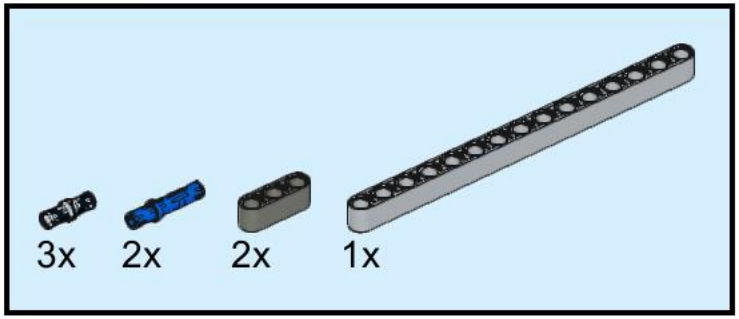

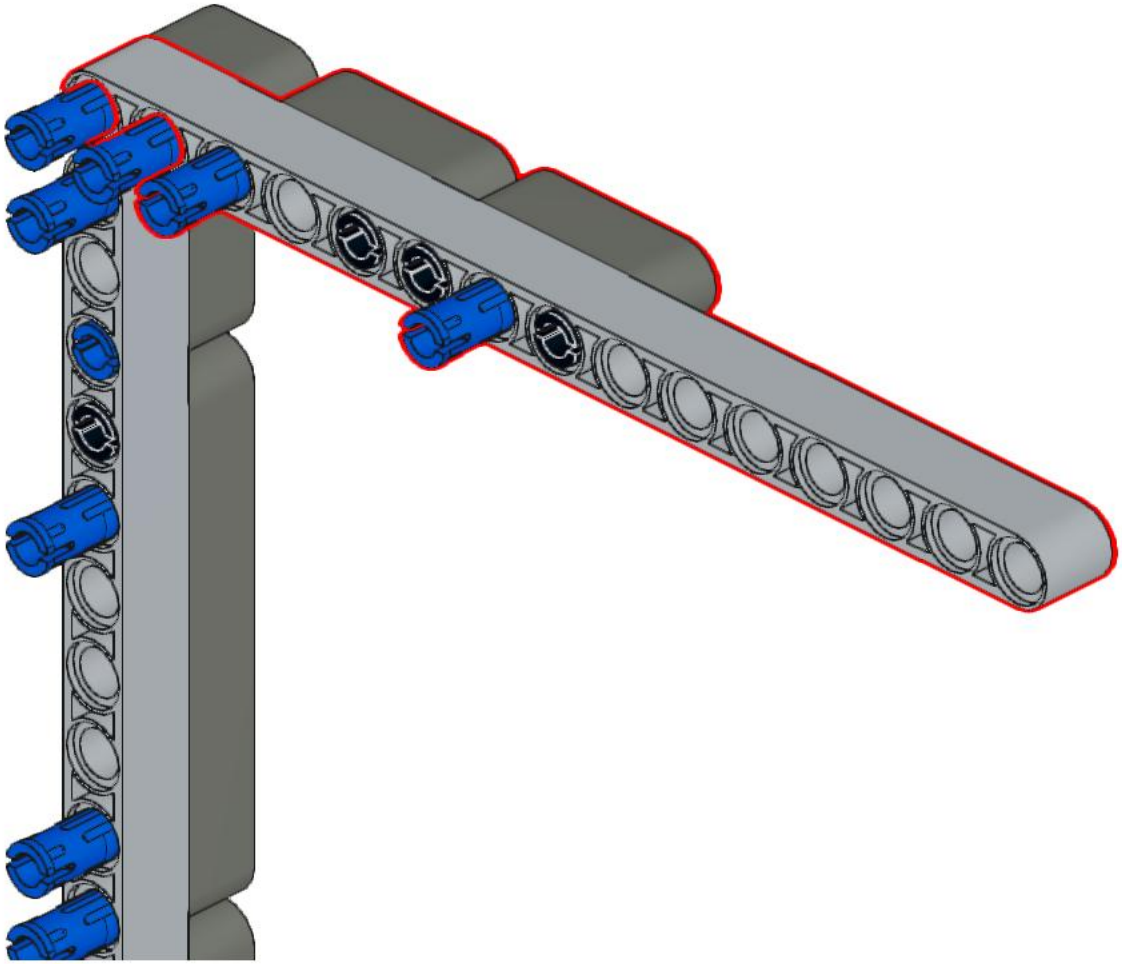

200

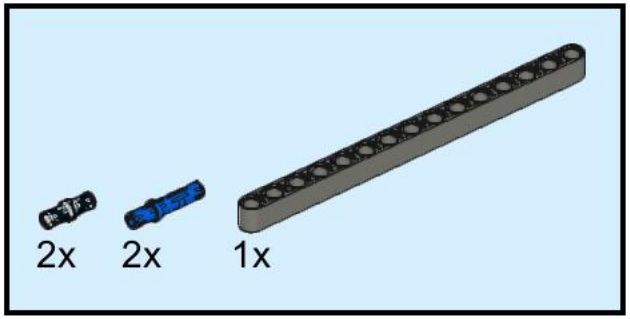

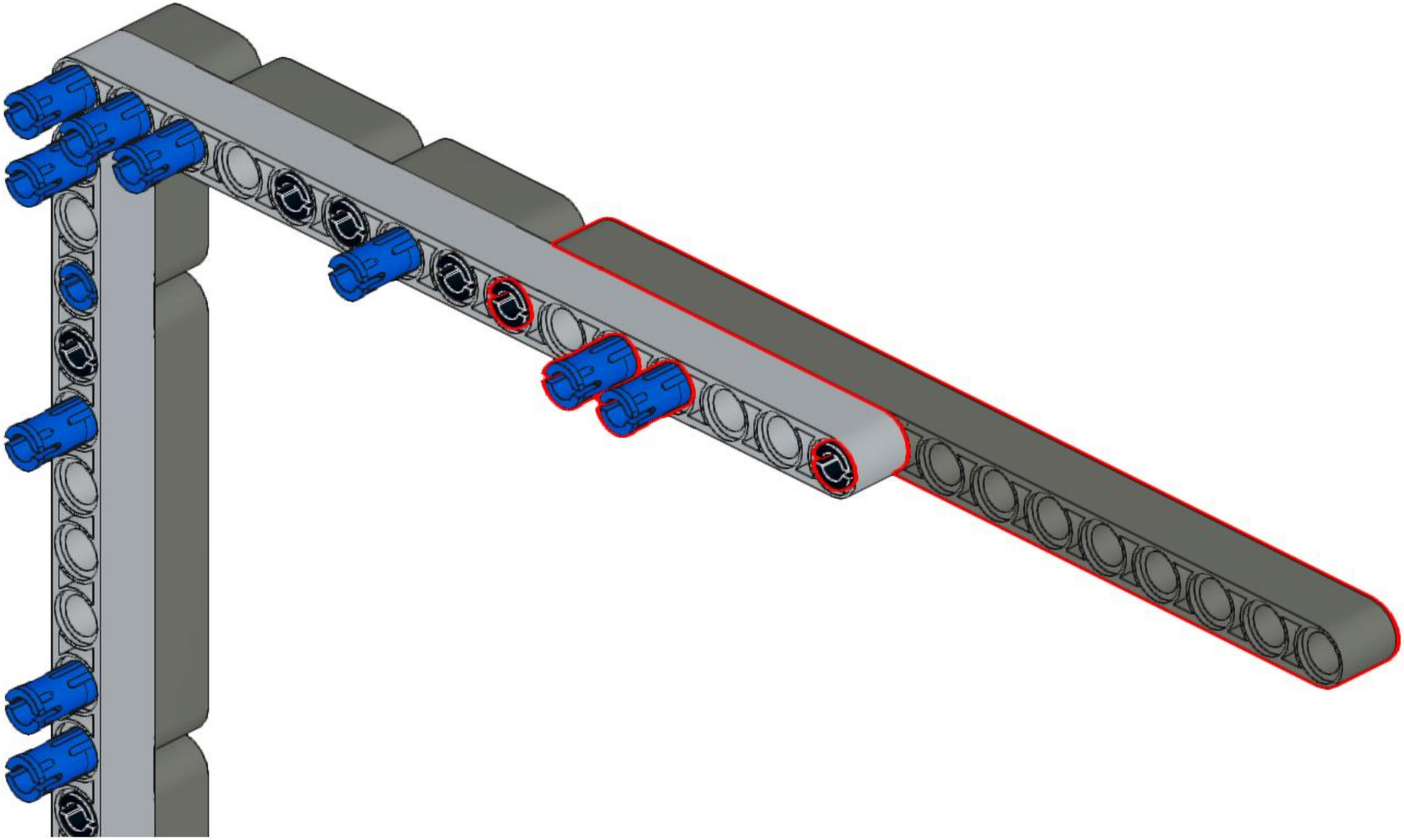

201

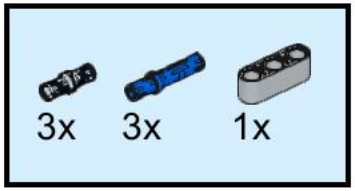

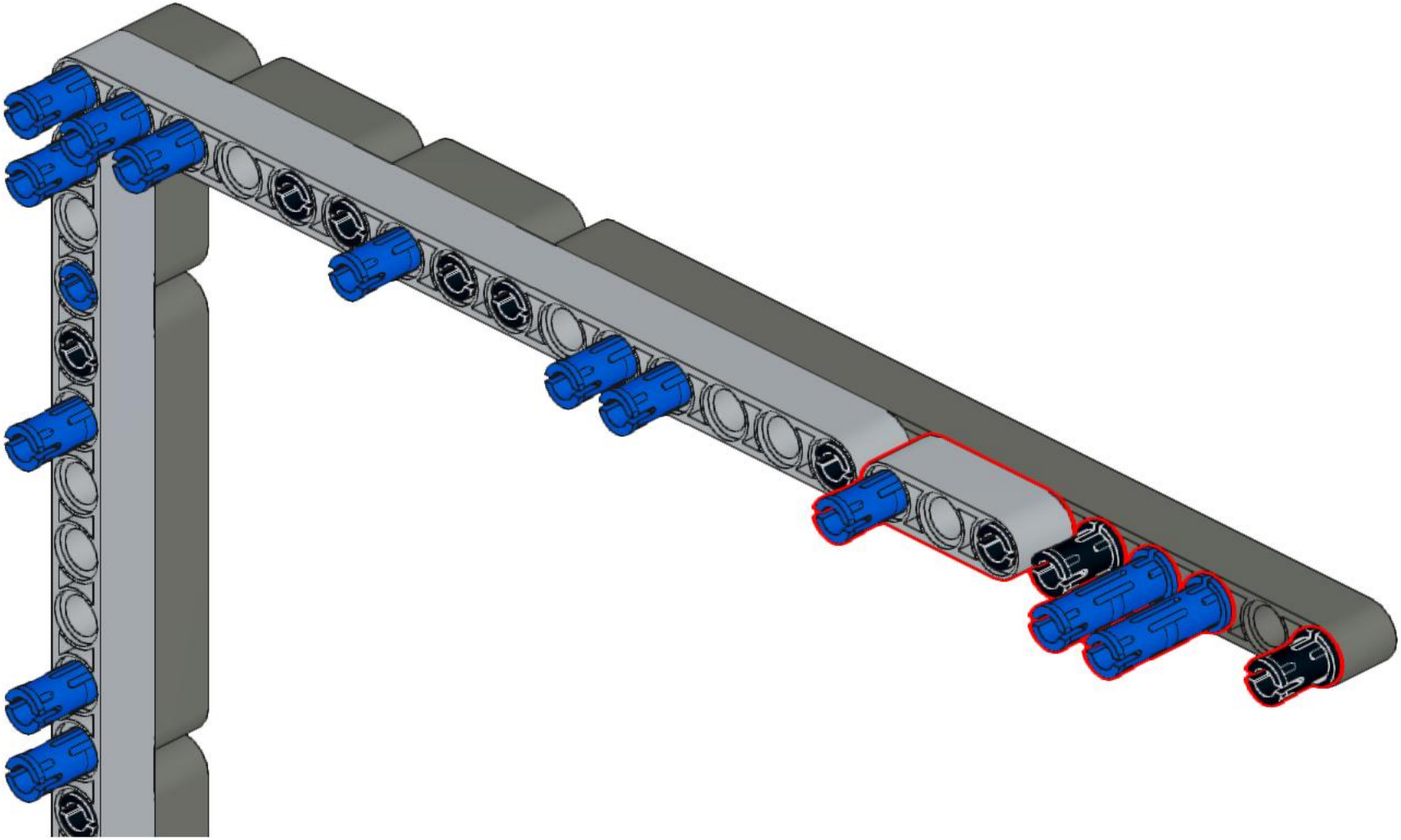

202

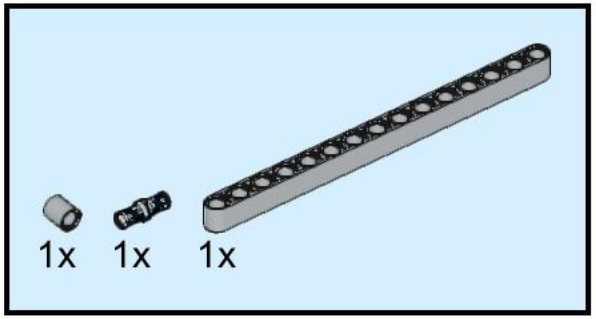

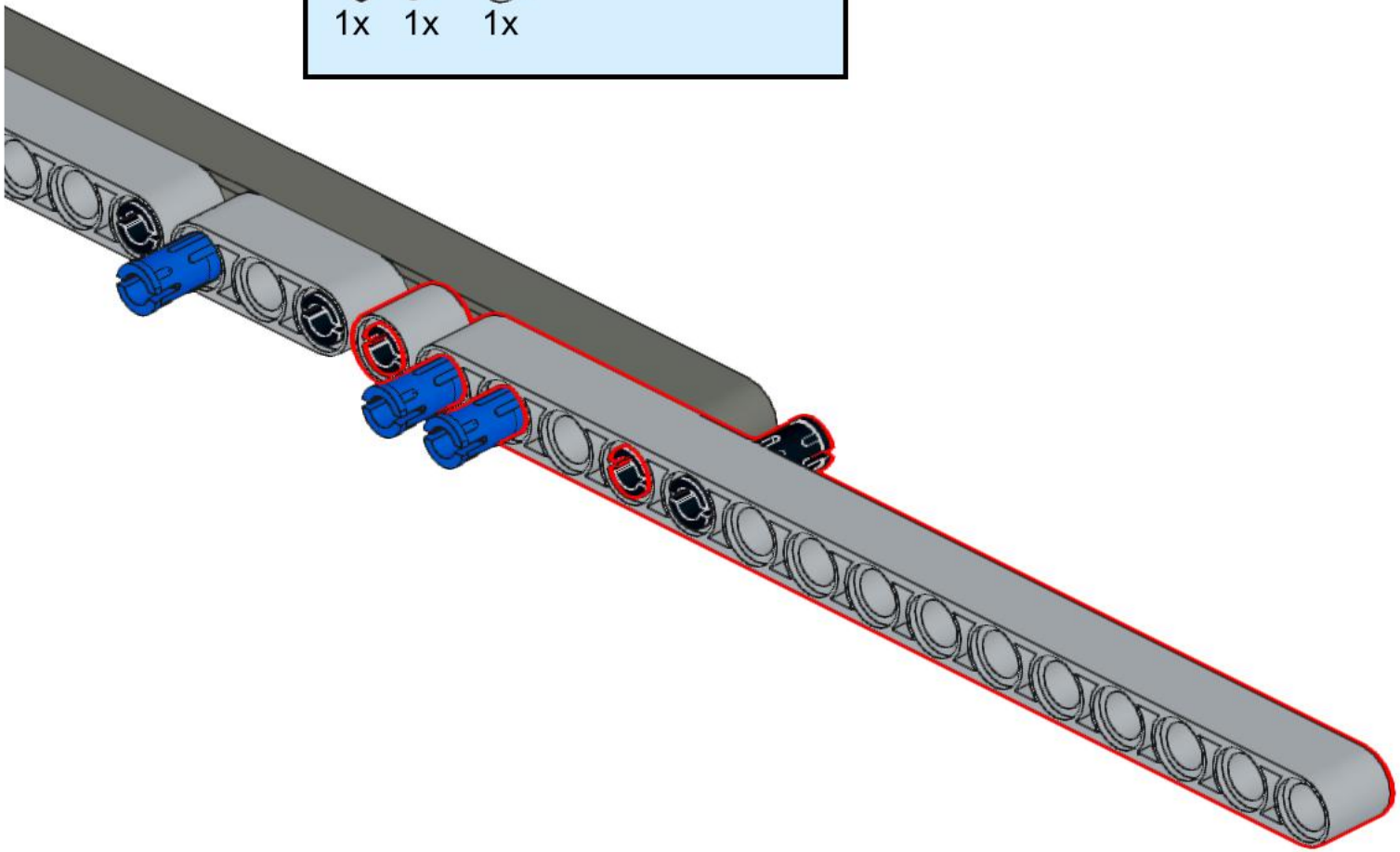

203

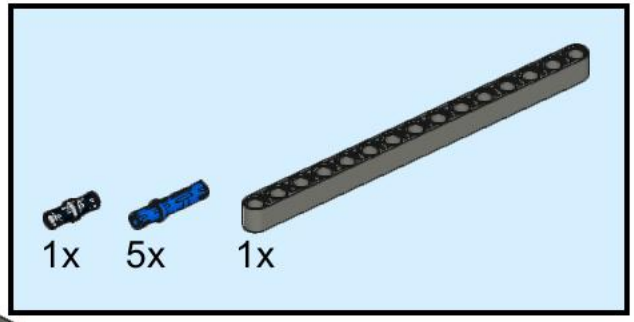

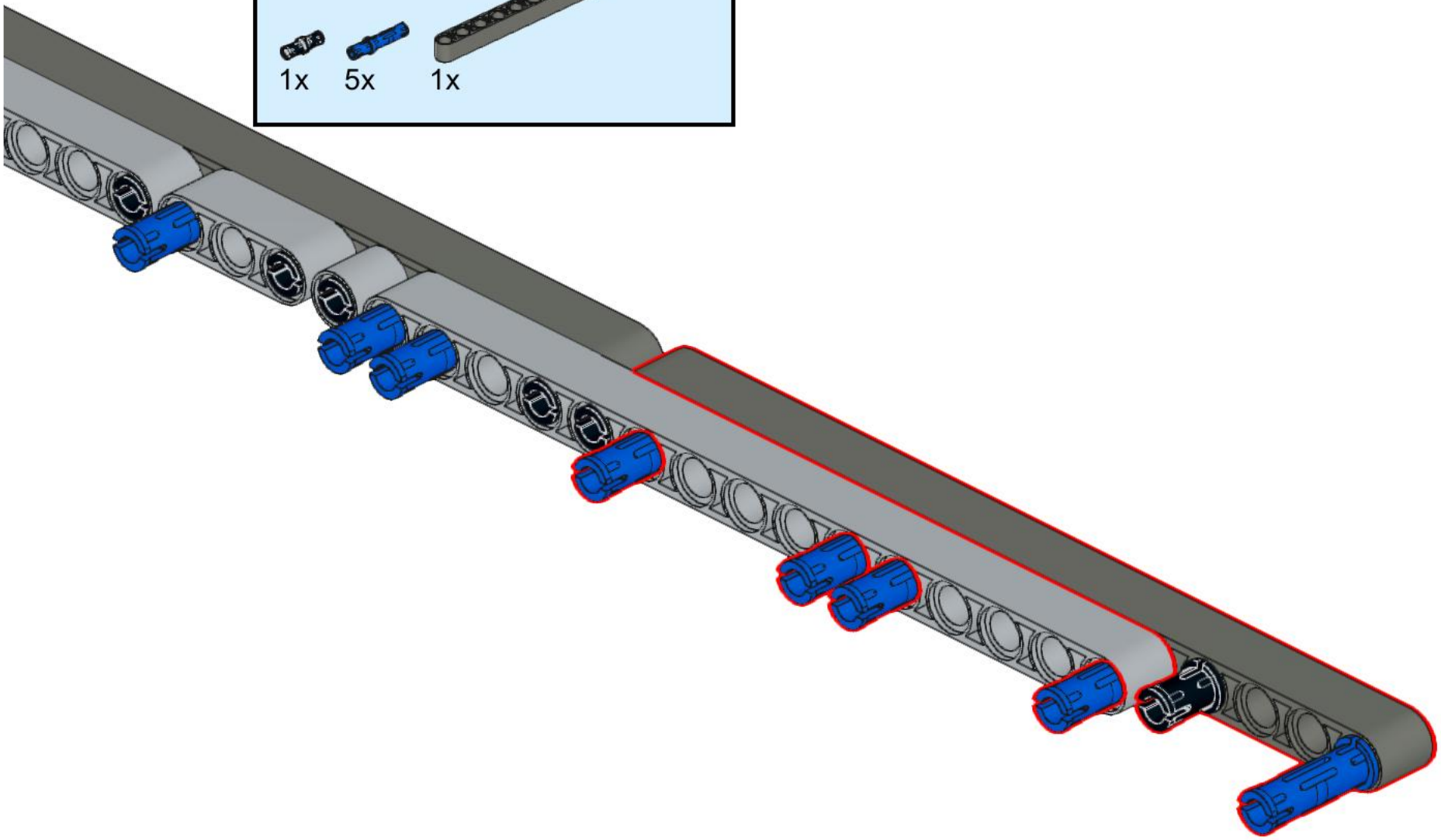

204

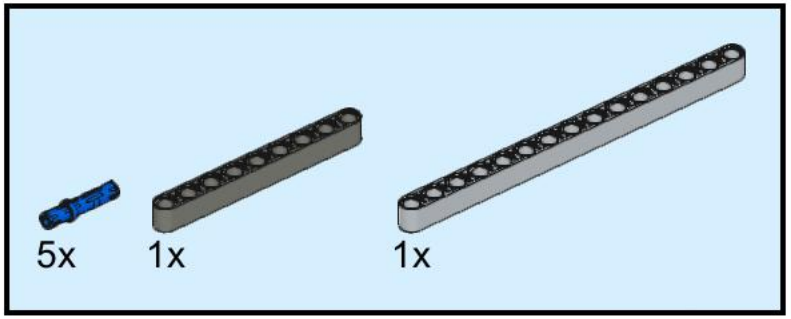

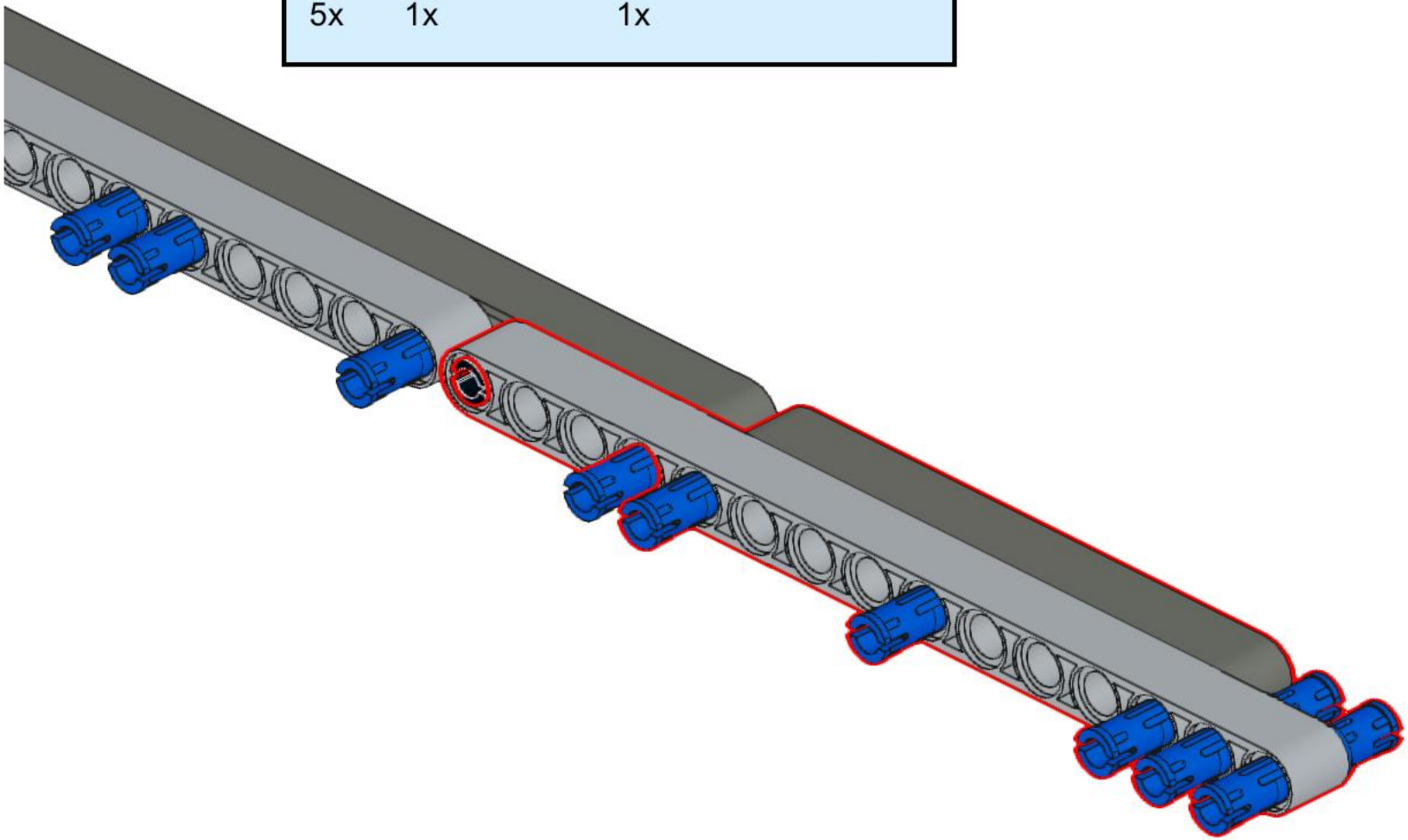

205

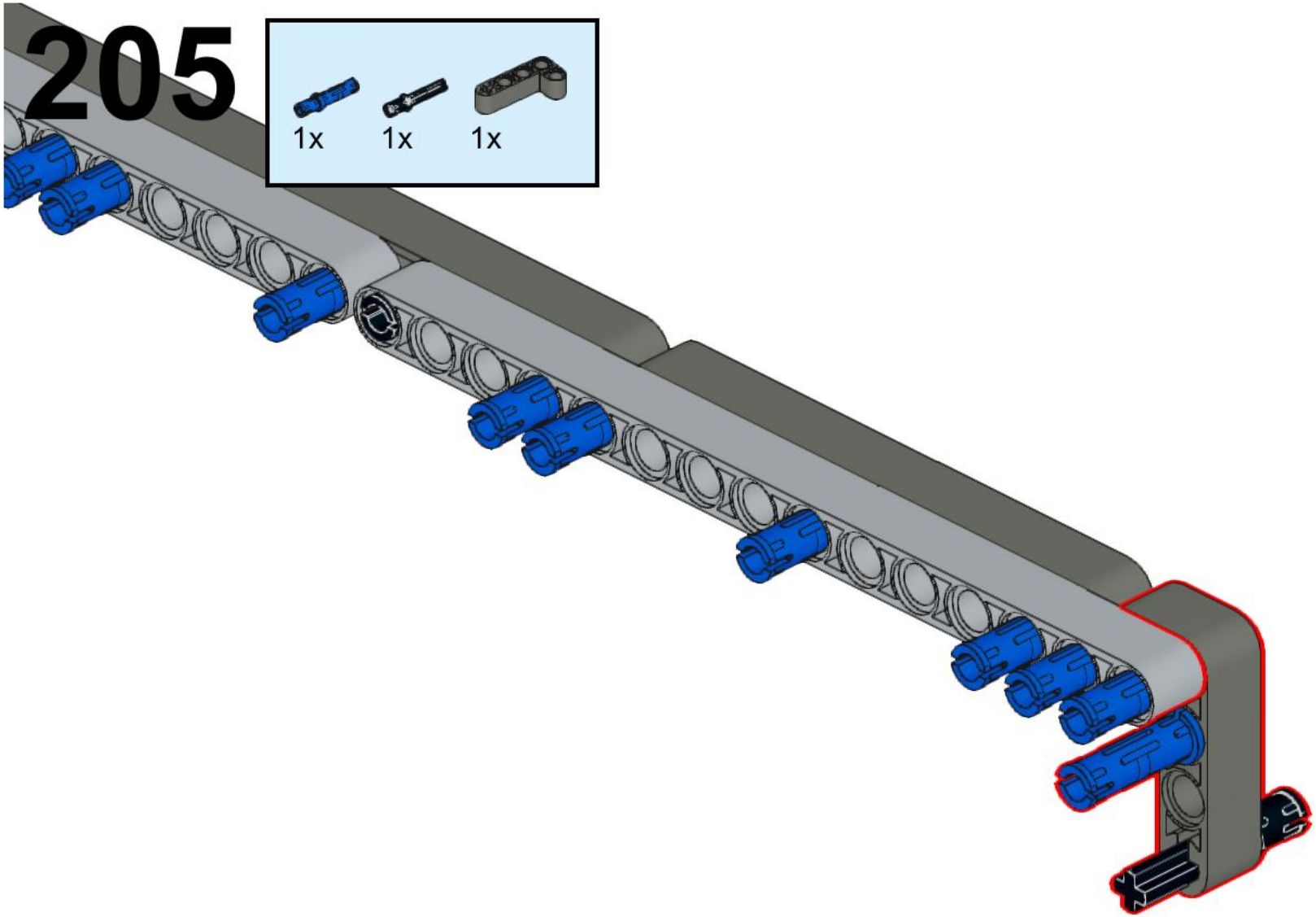

206

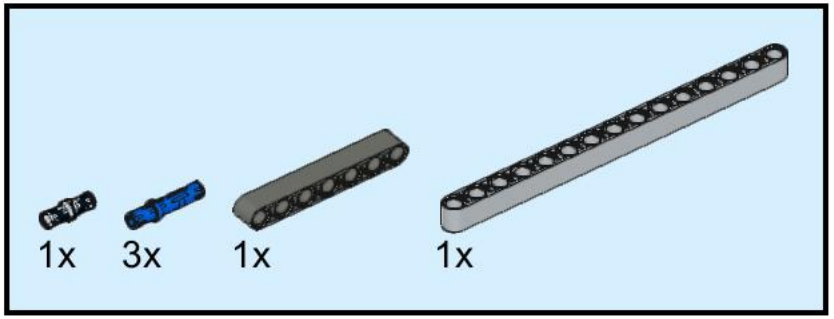

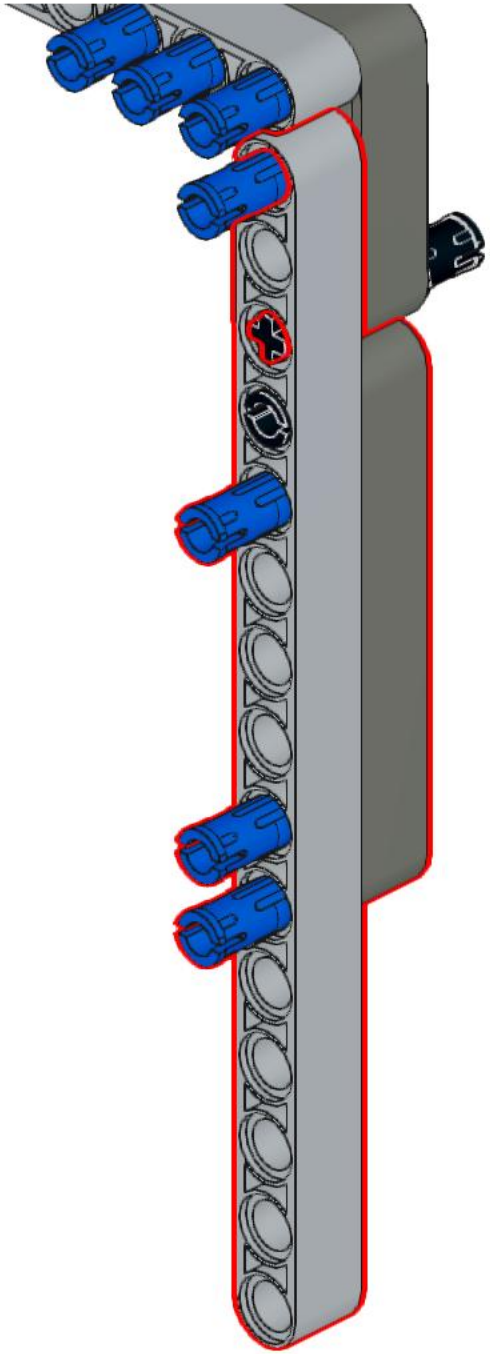

207

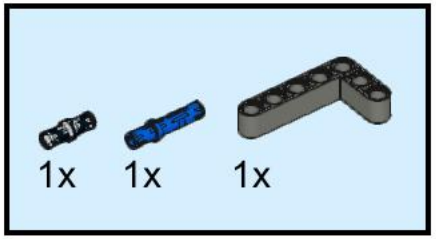

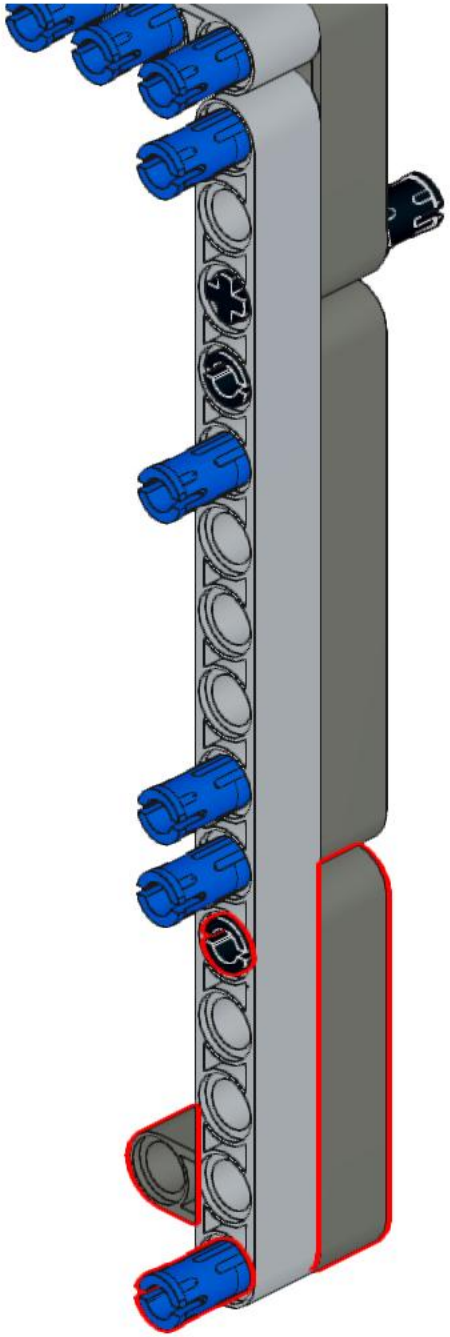

208

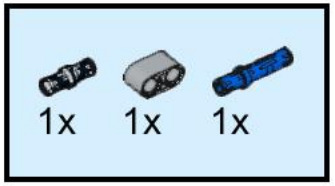

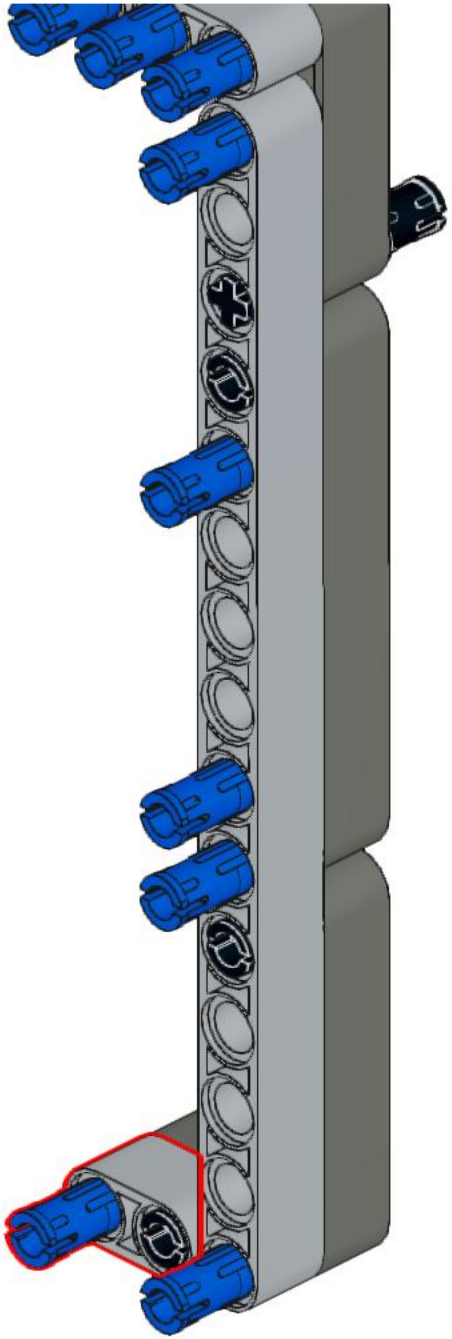

209

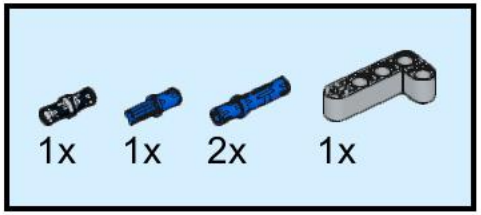

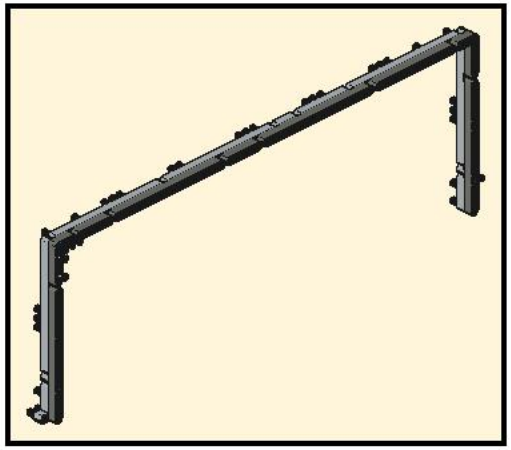

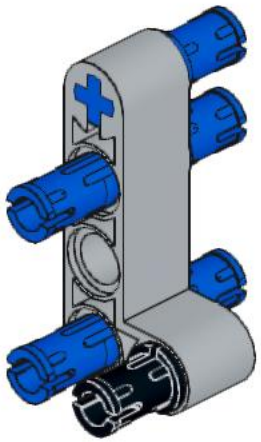

210

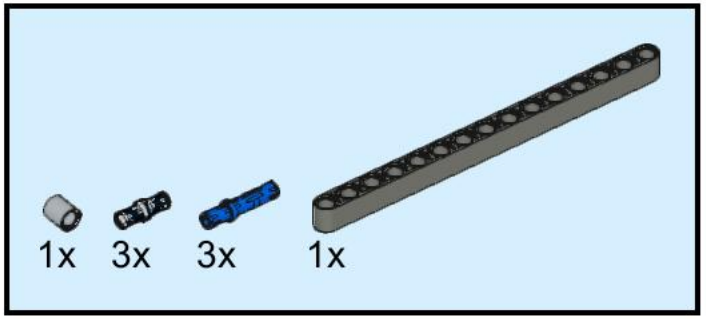

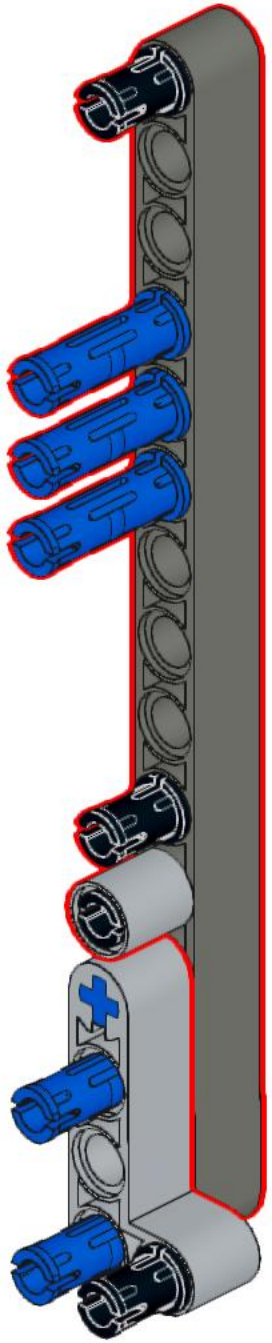

211

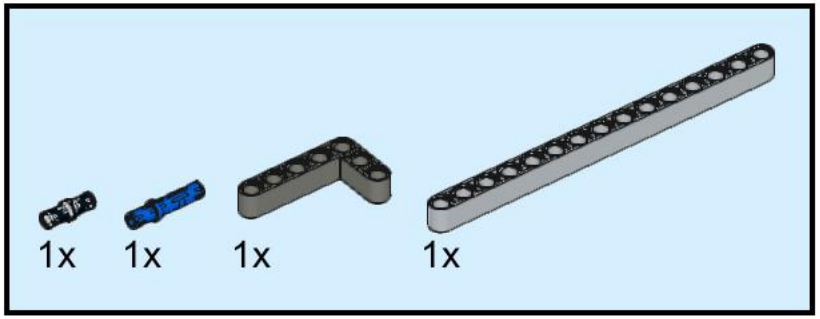

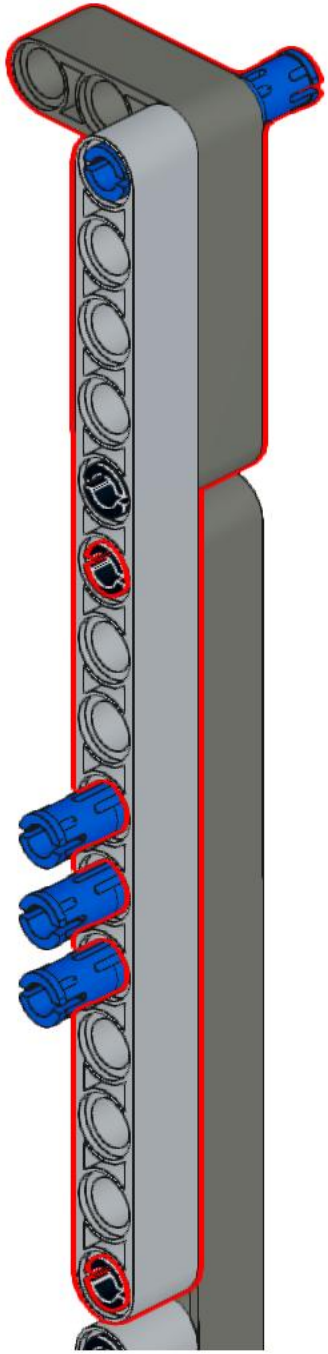

212

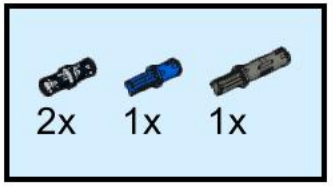

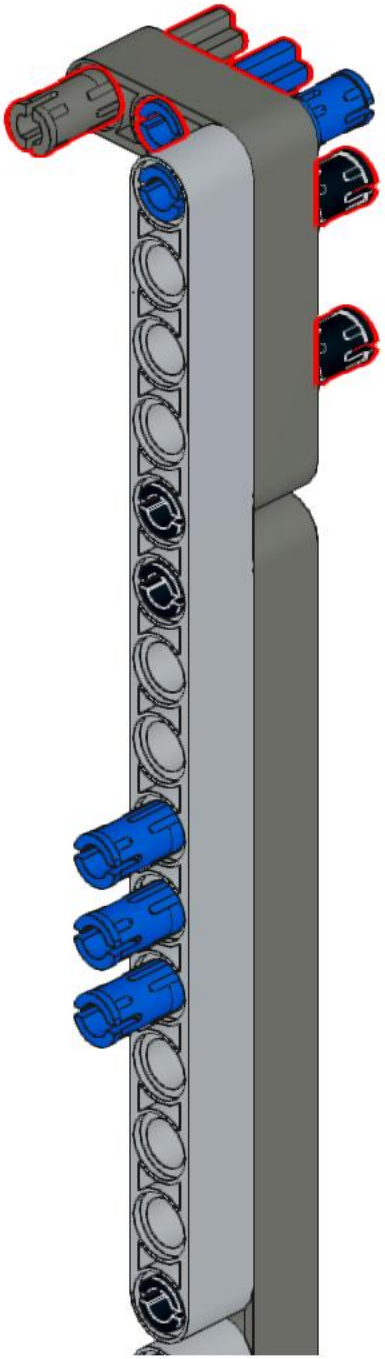

213

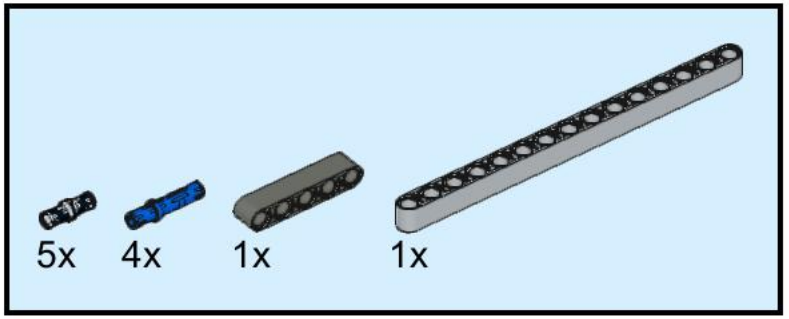

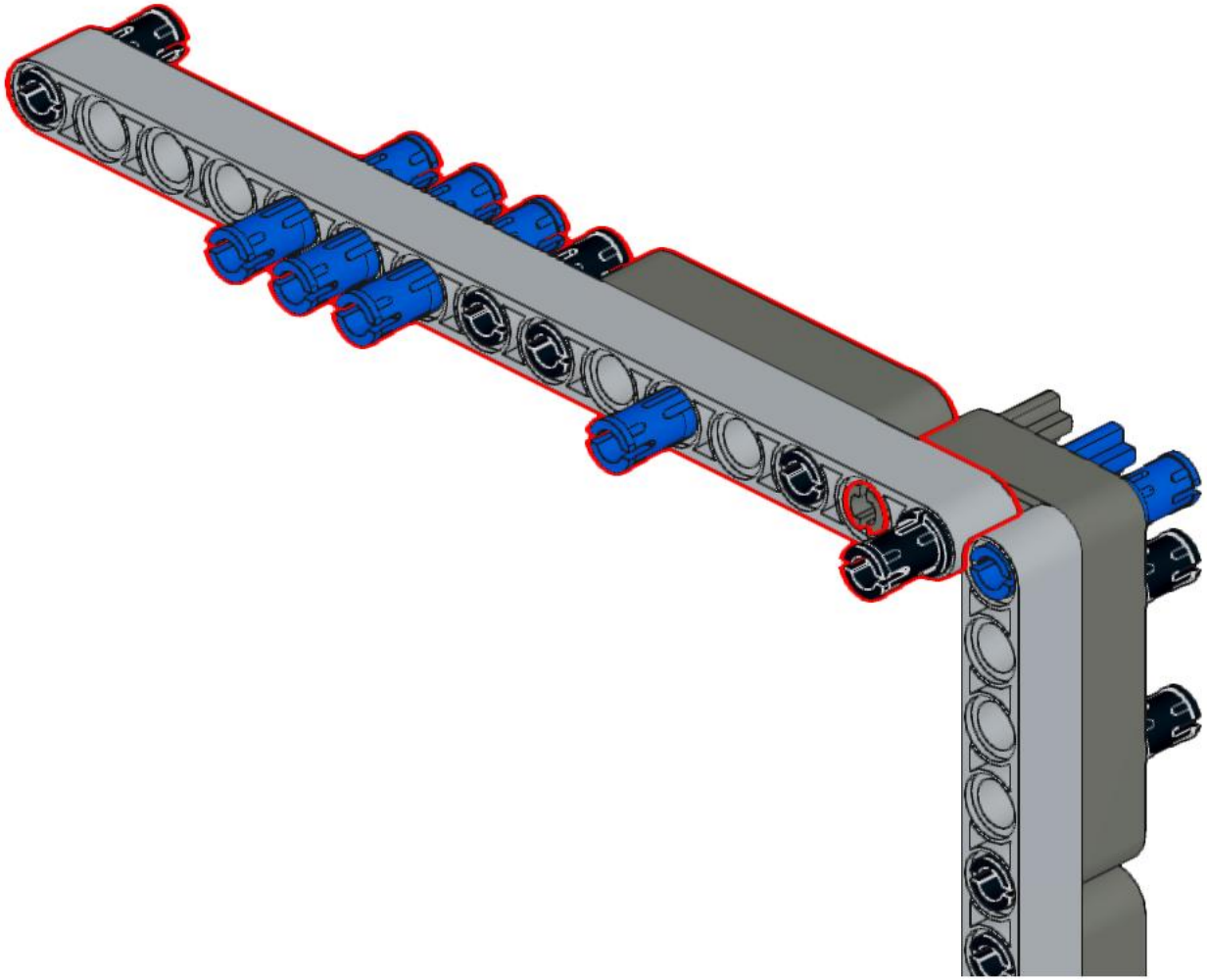

214

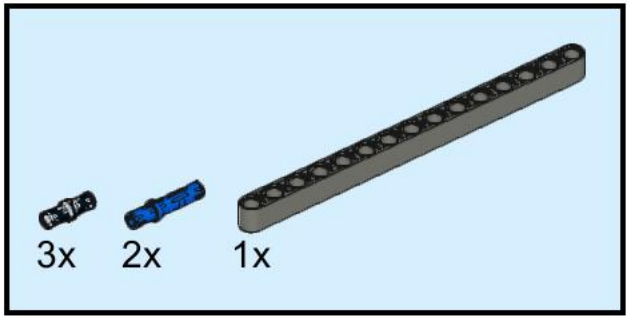

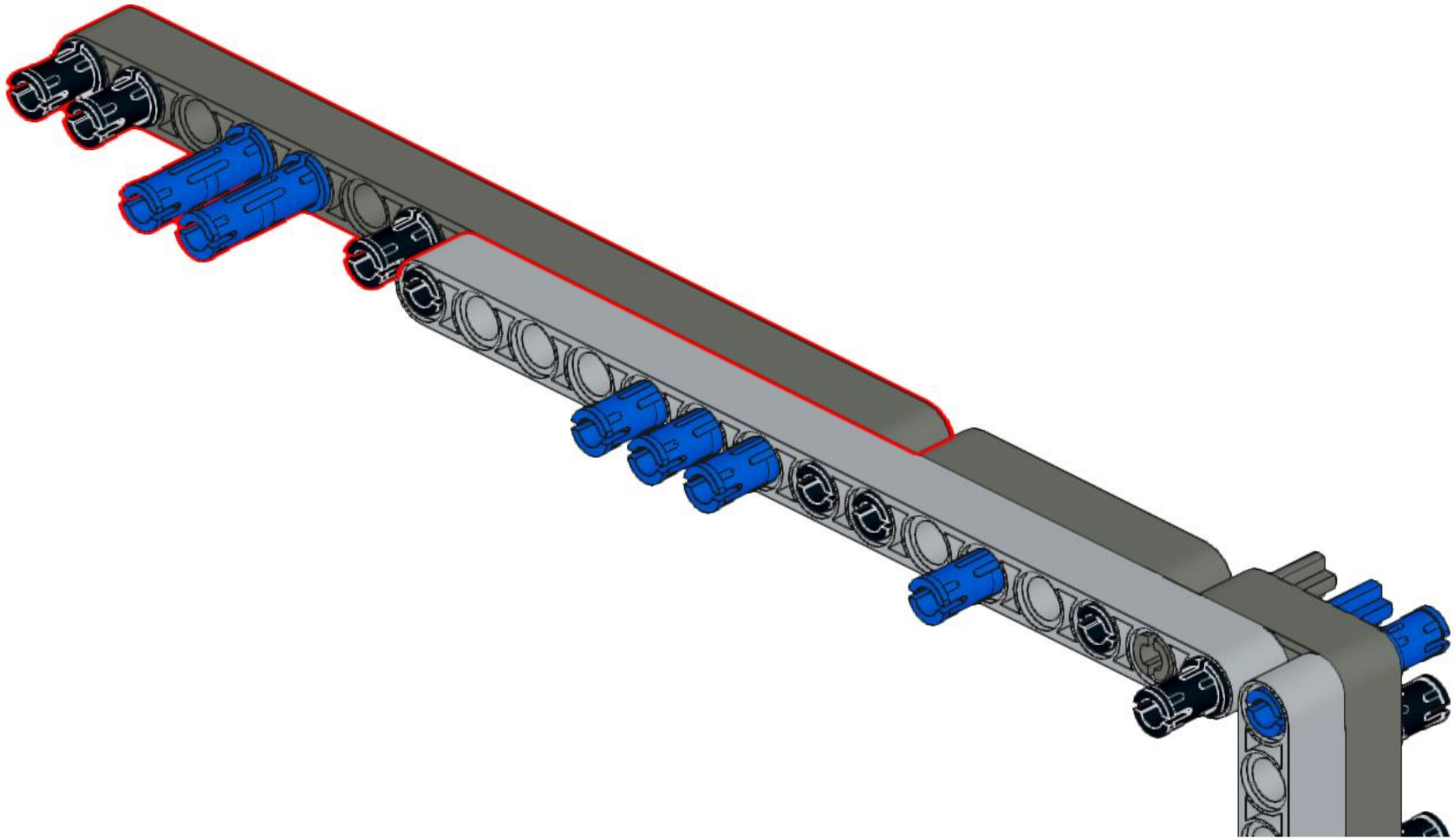

215

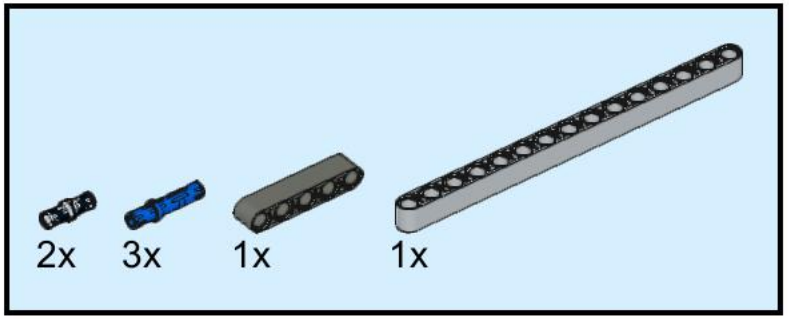

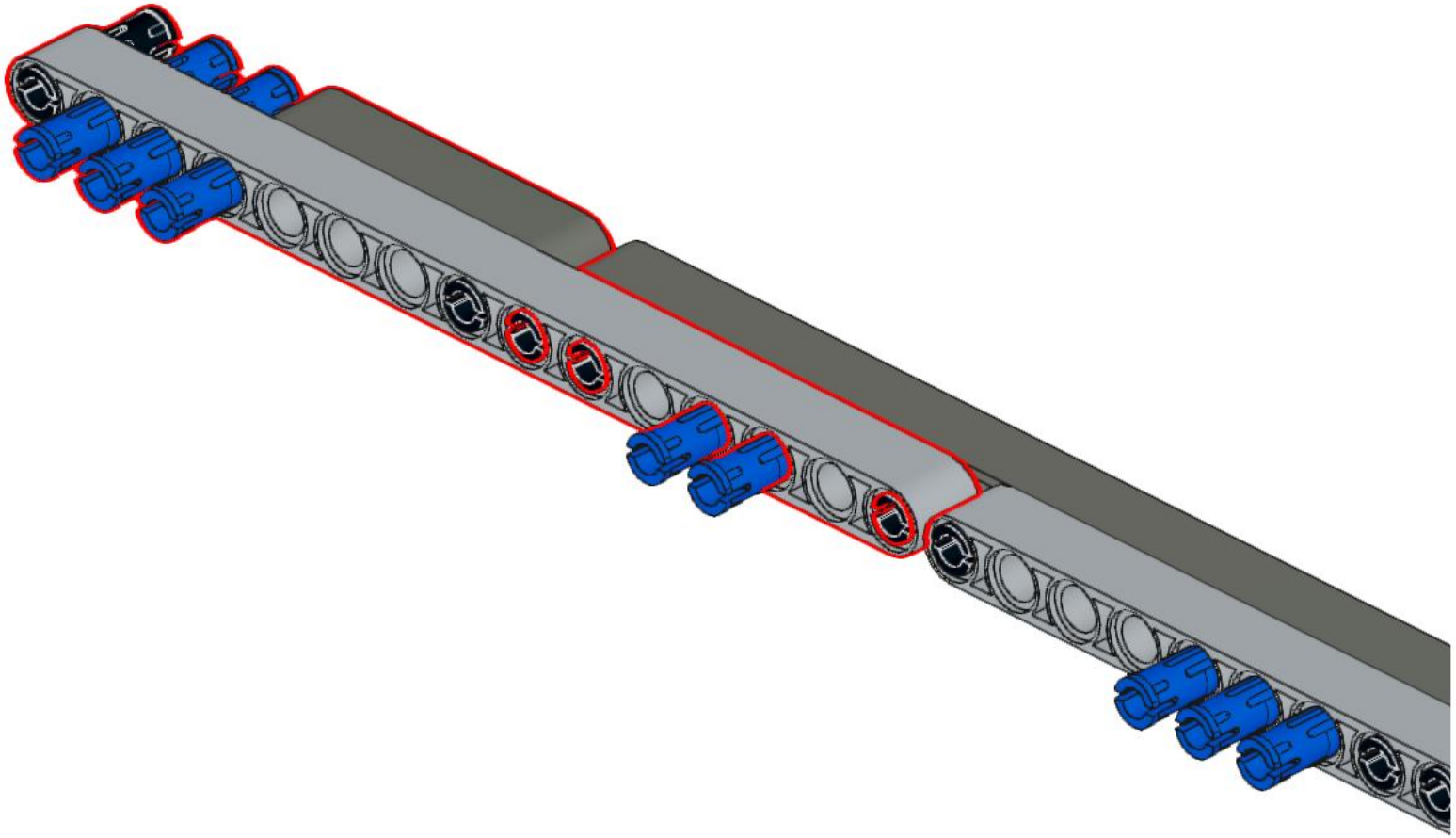

216

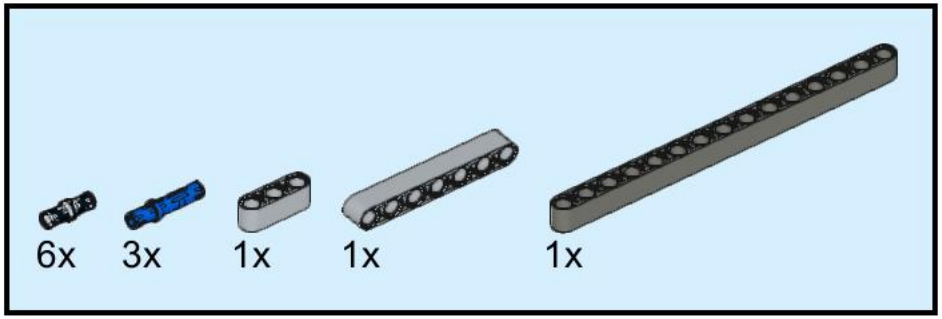

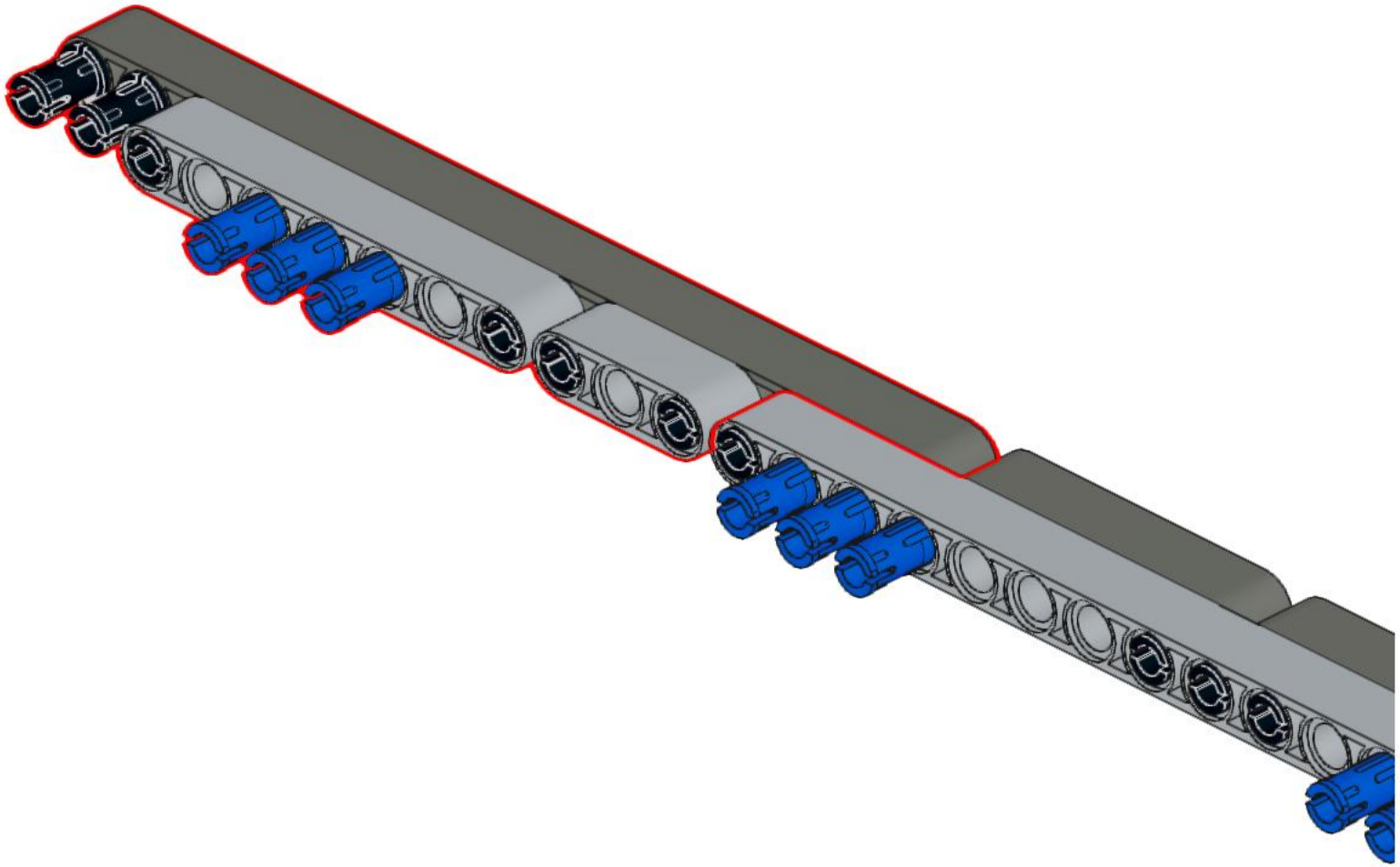

217

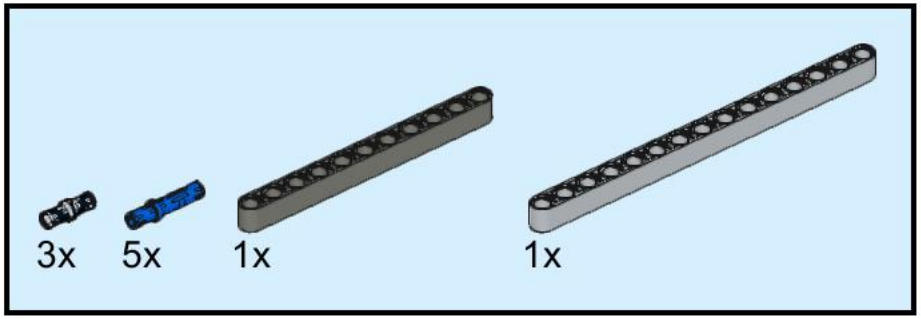

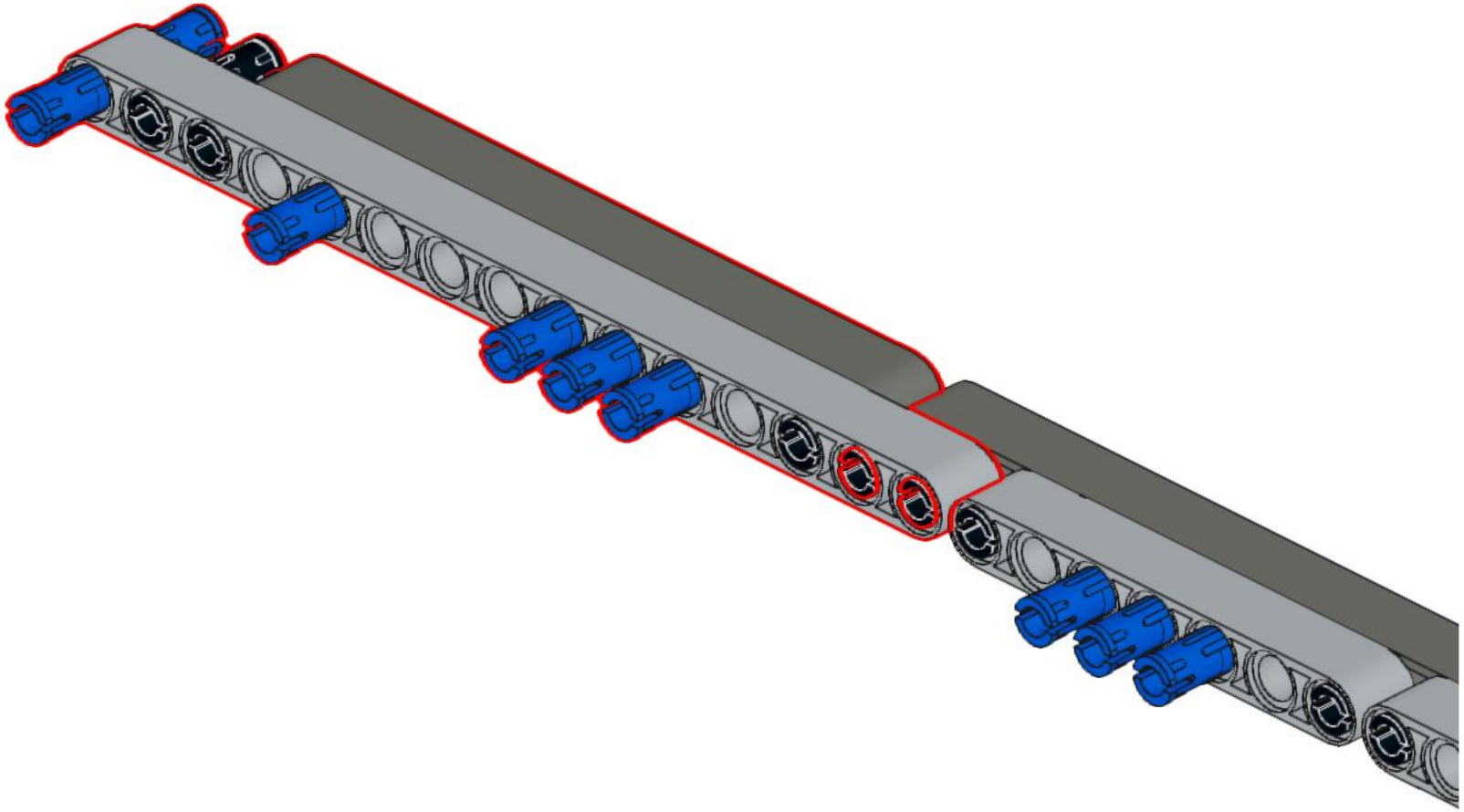

218

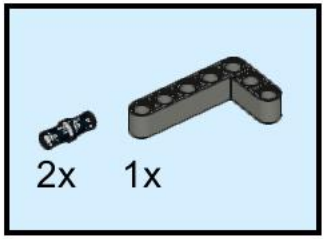

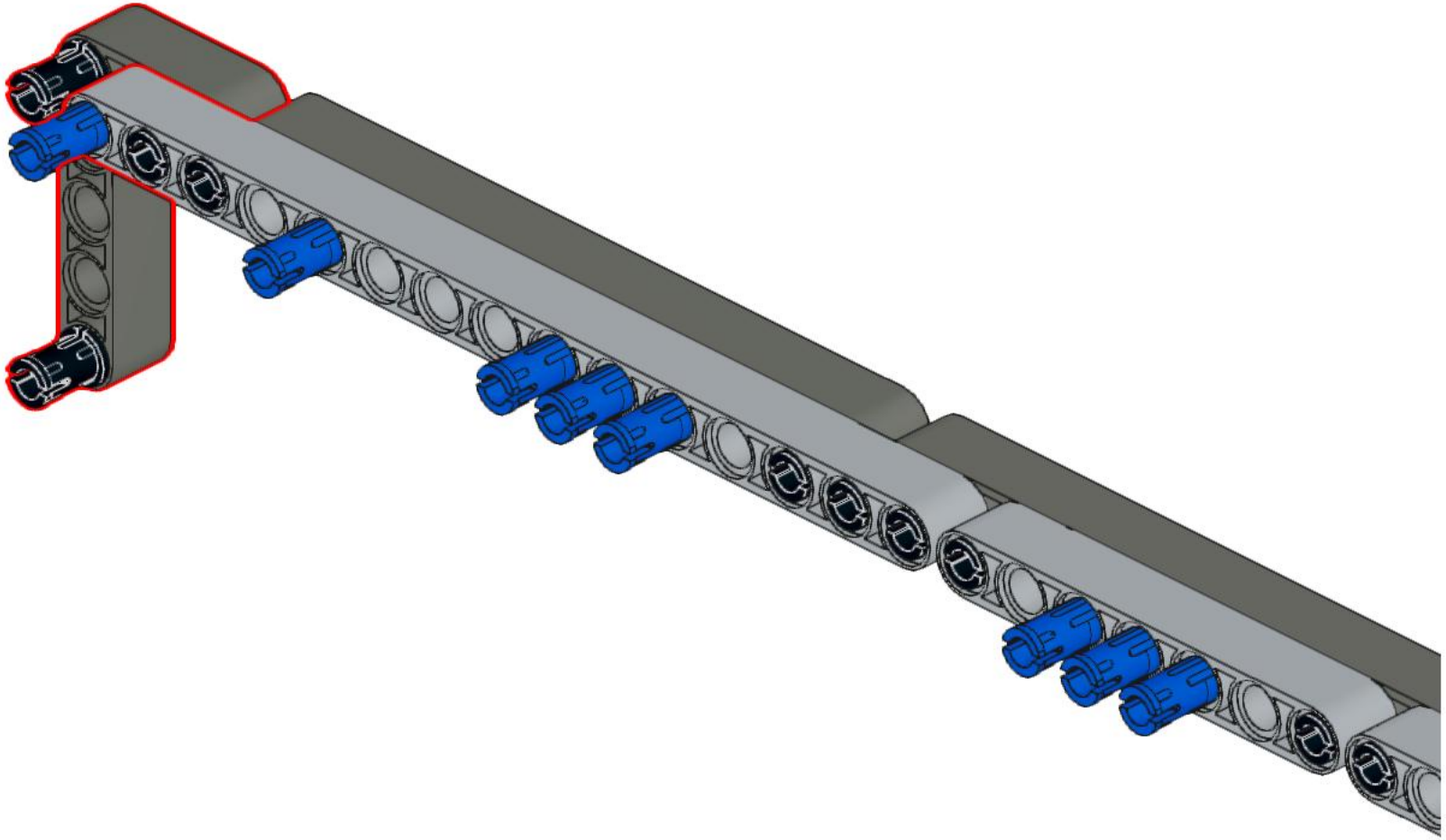

219

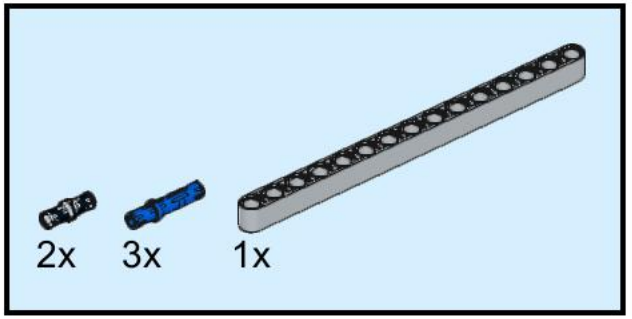

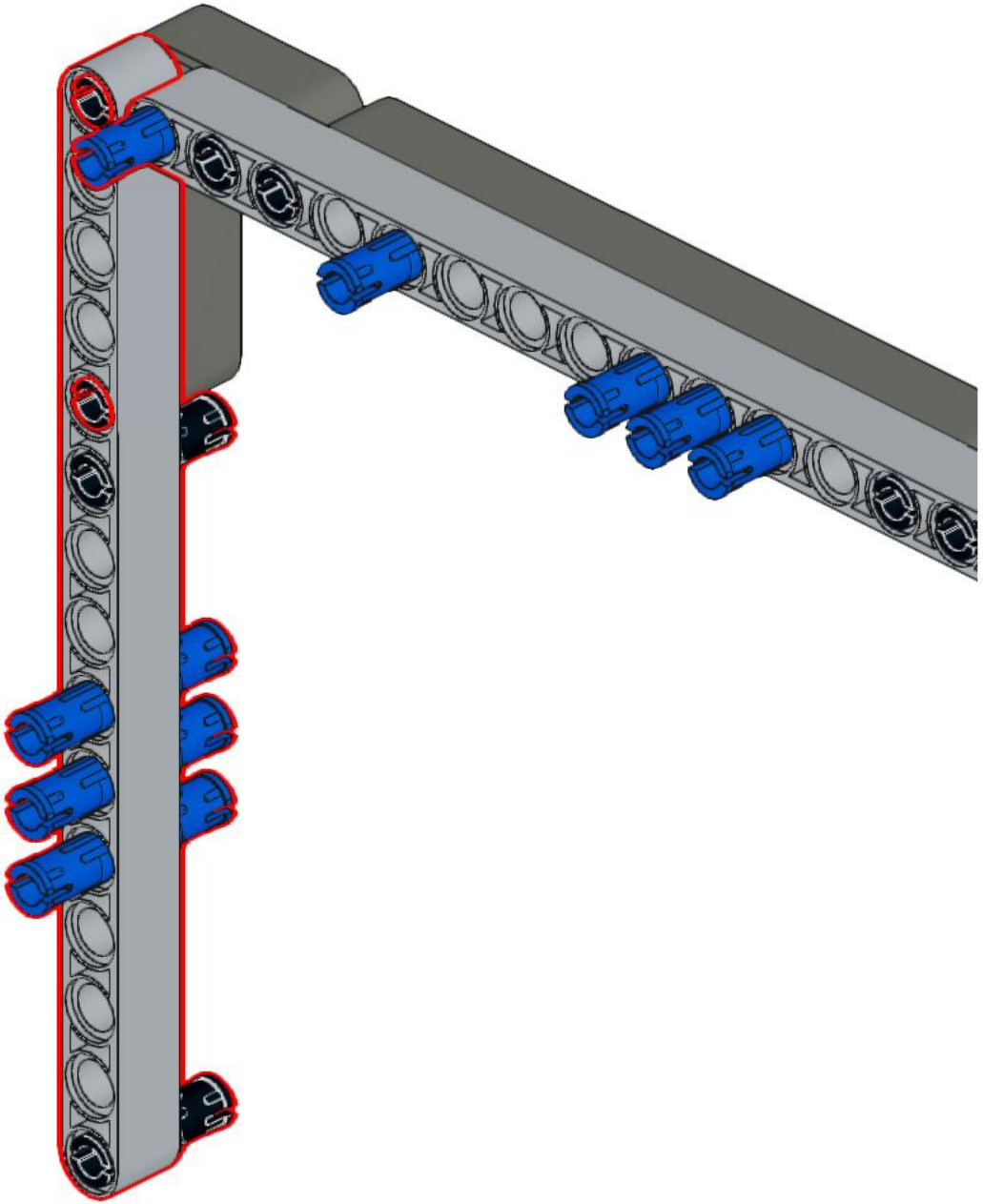

220

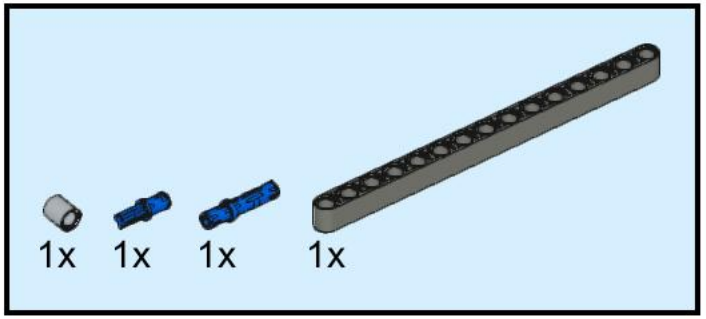

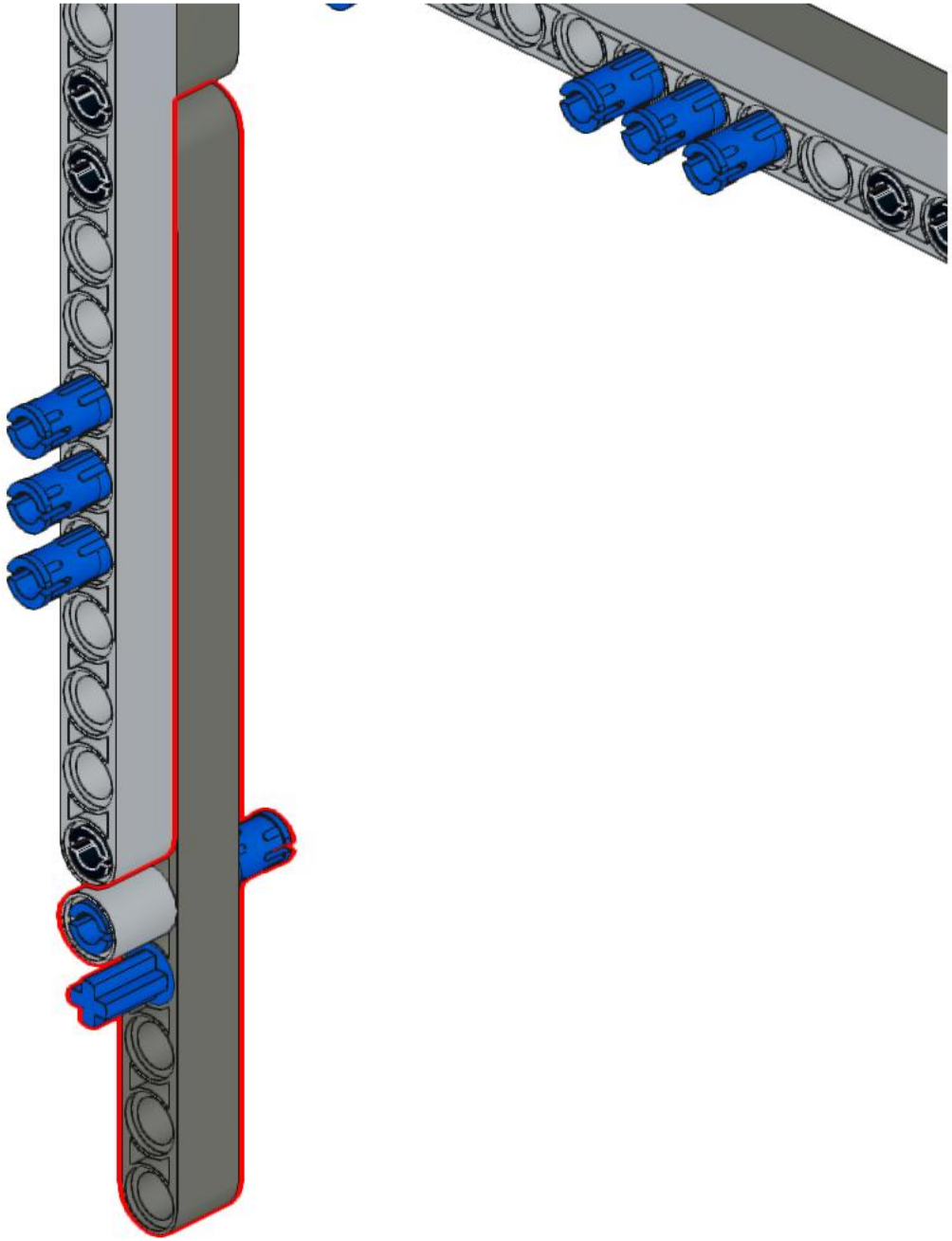

221

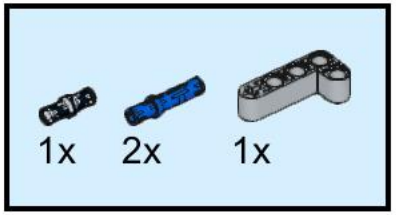

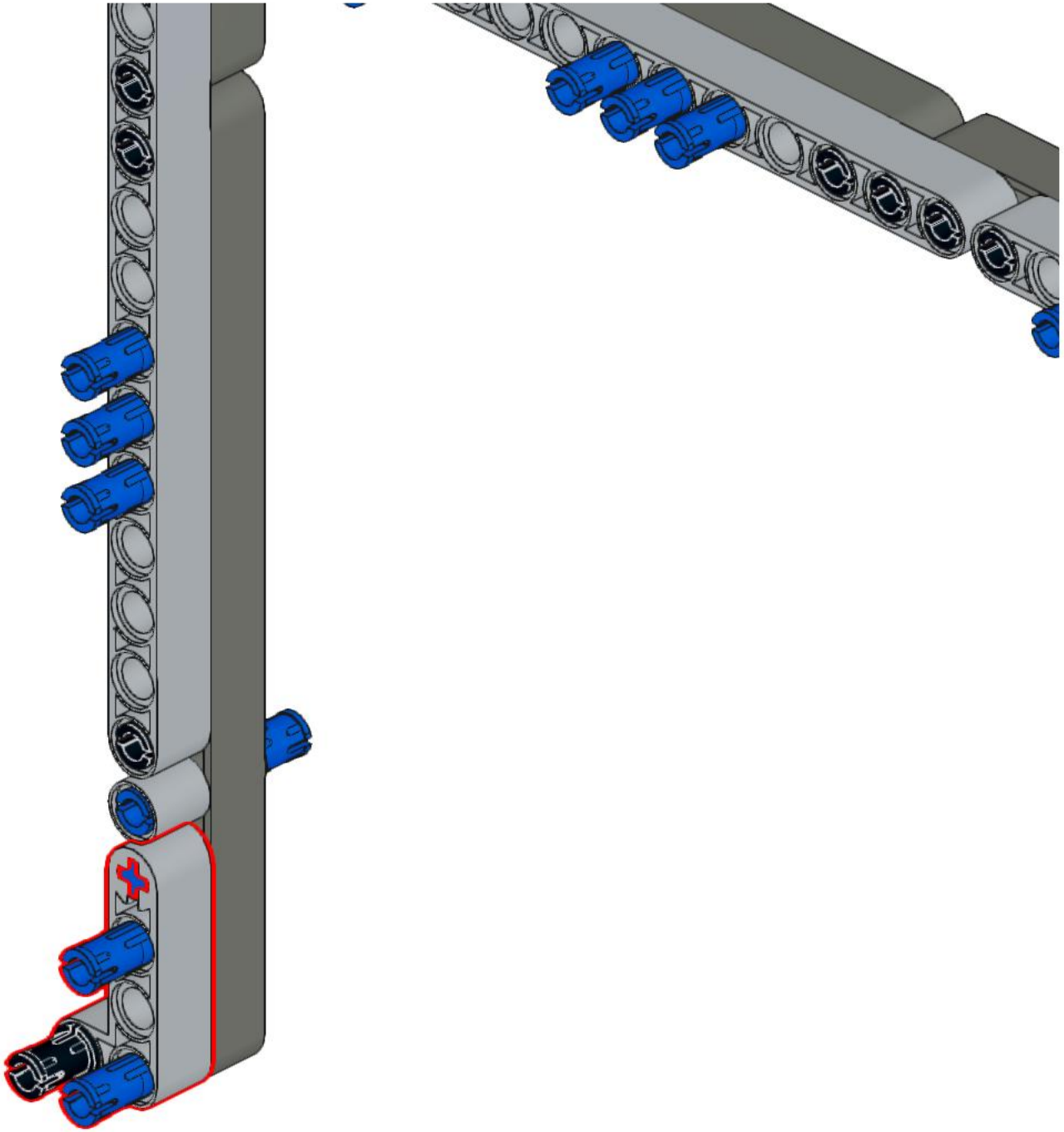

222

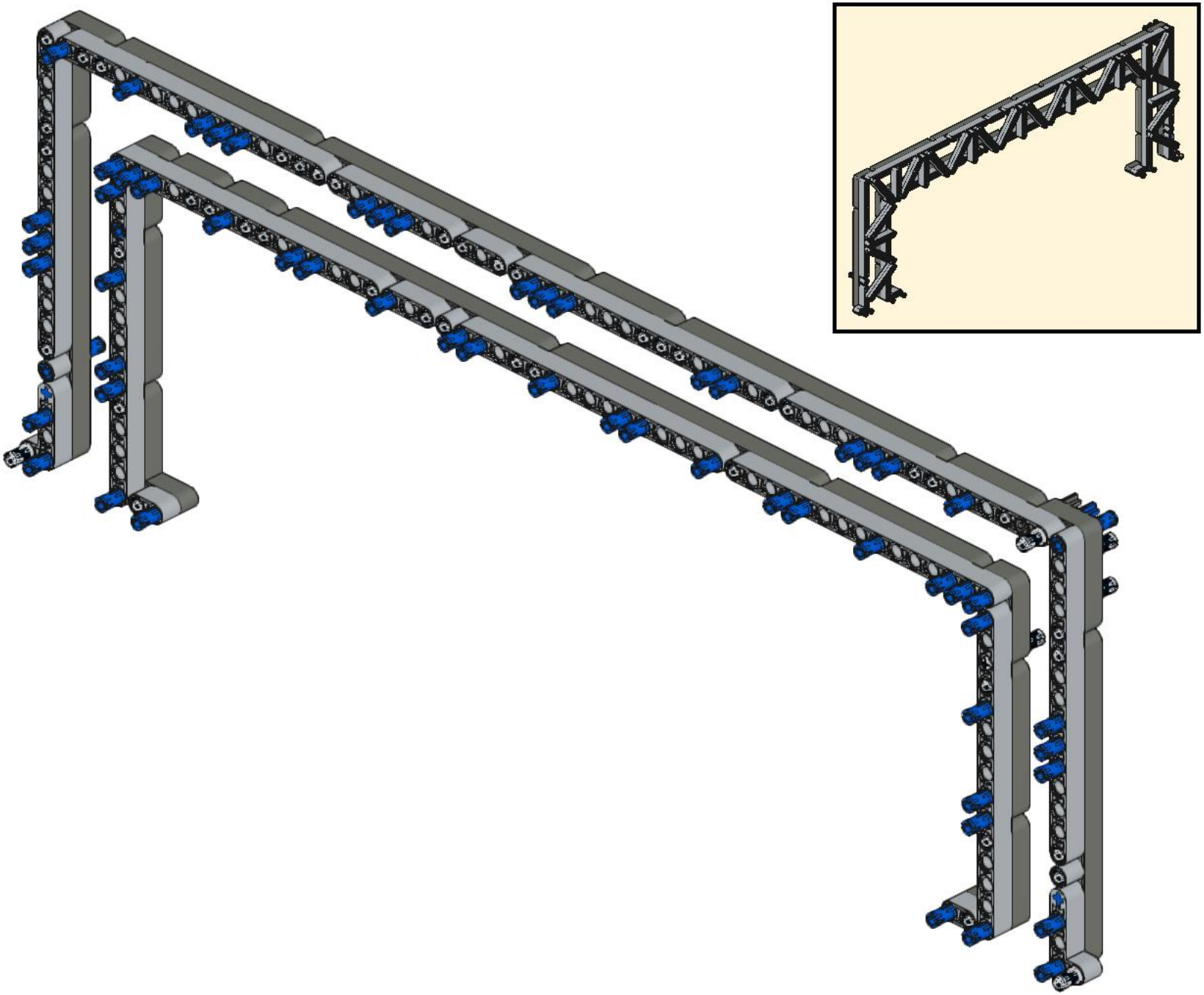

223

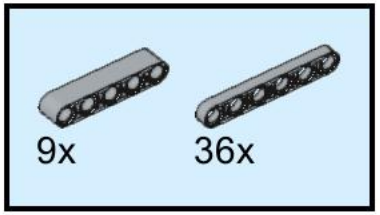

Truss Wheel axle will go through this hole.

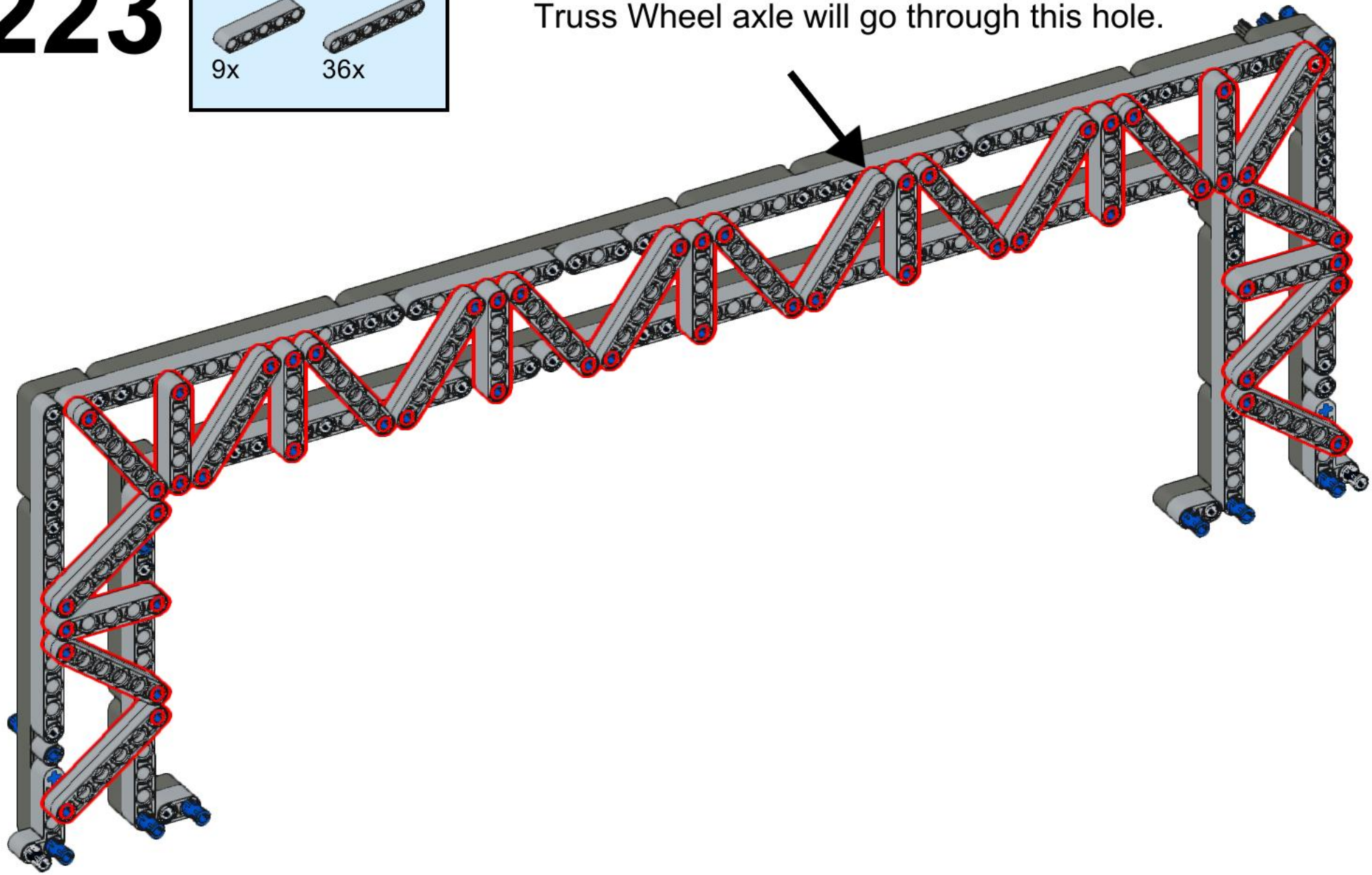

224

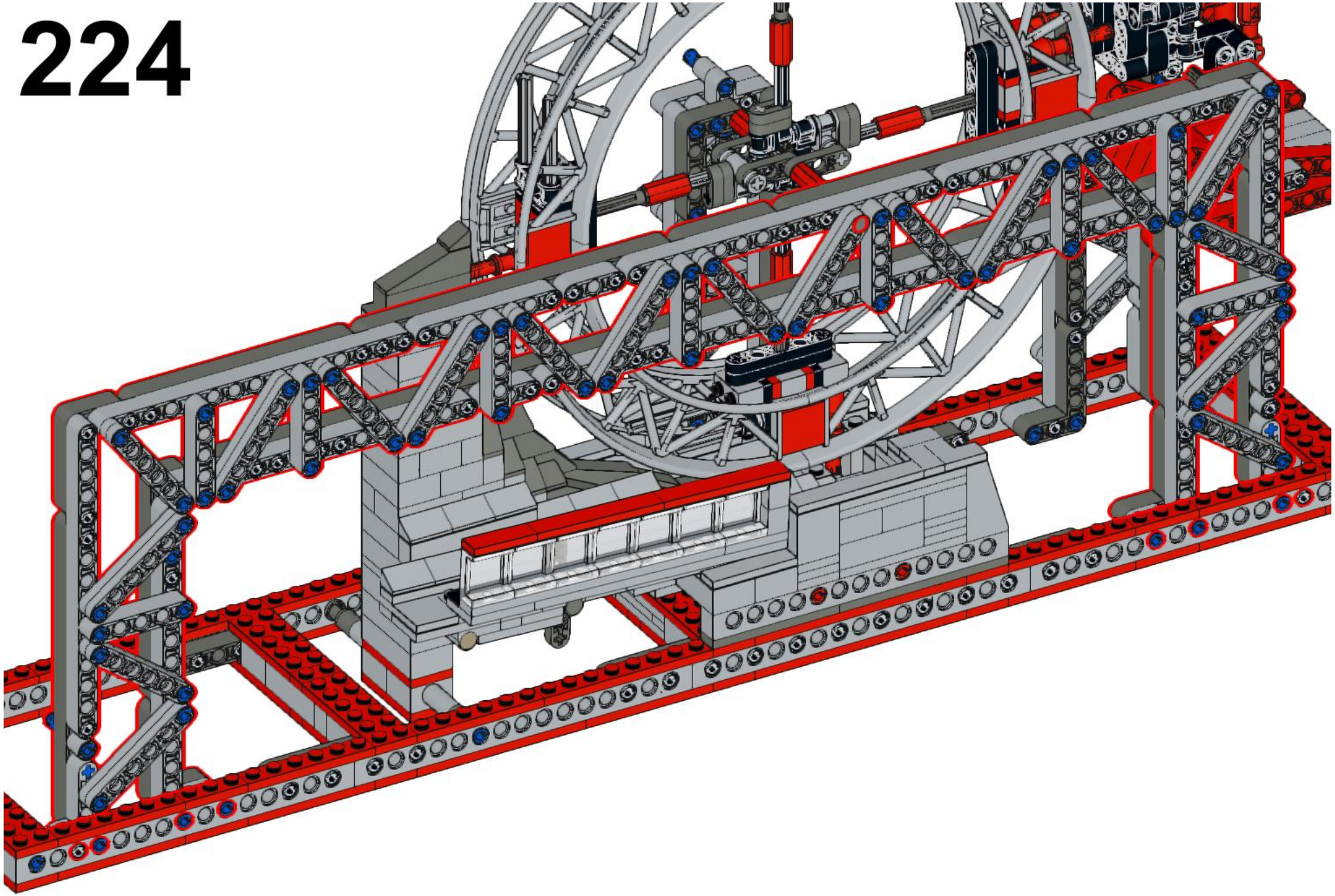

225

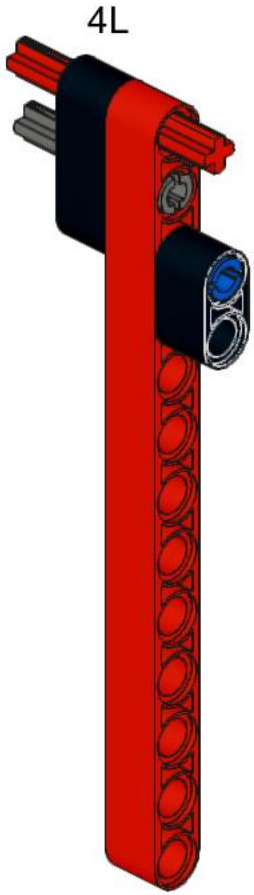

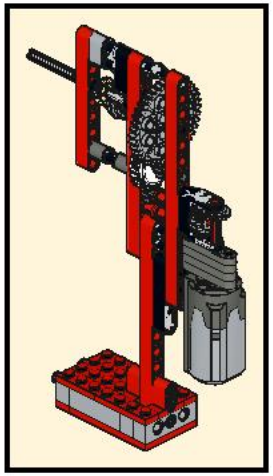

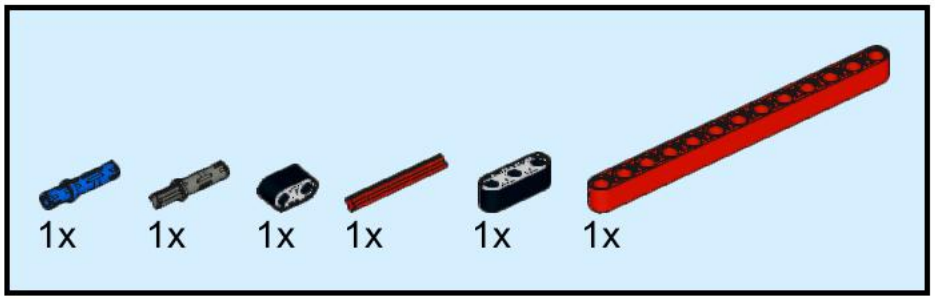

226

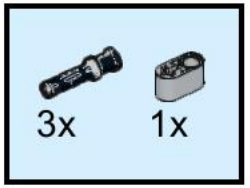

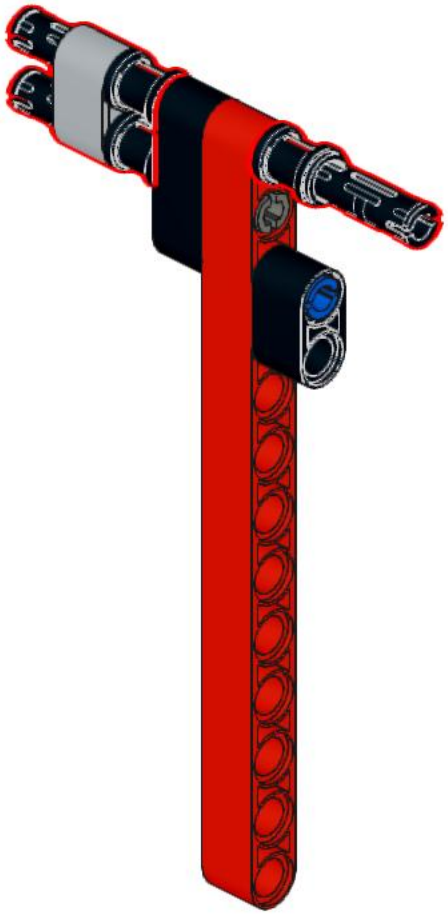

227

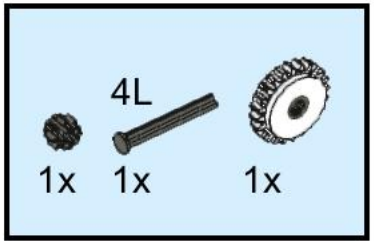

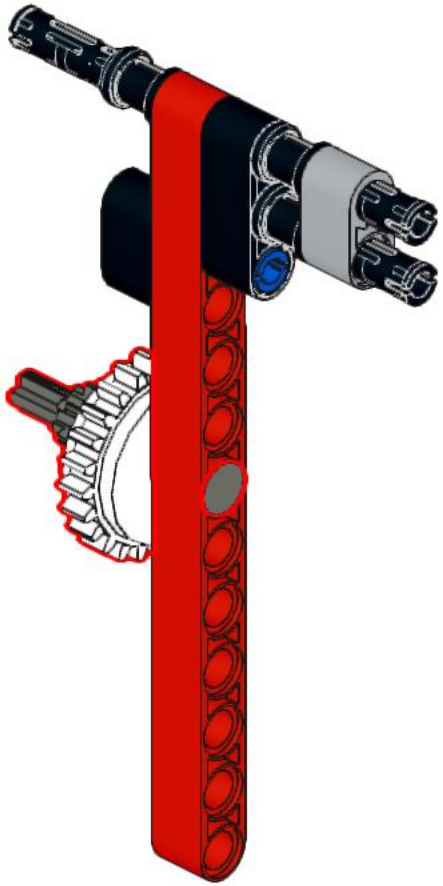

228

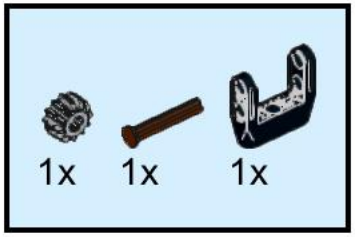

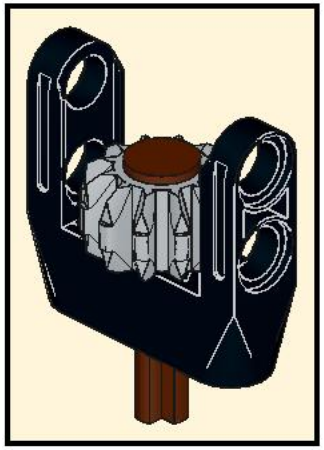

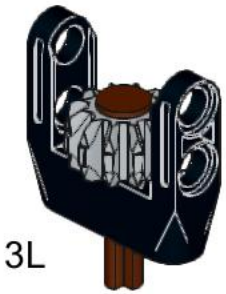

229

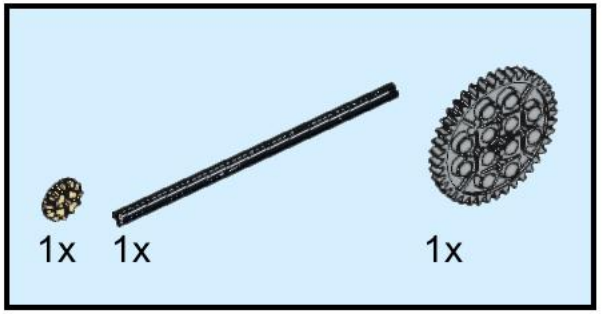

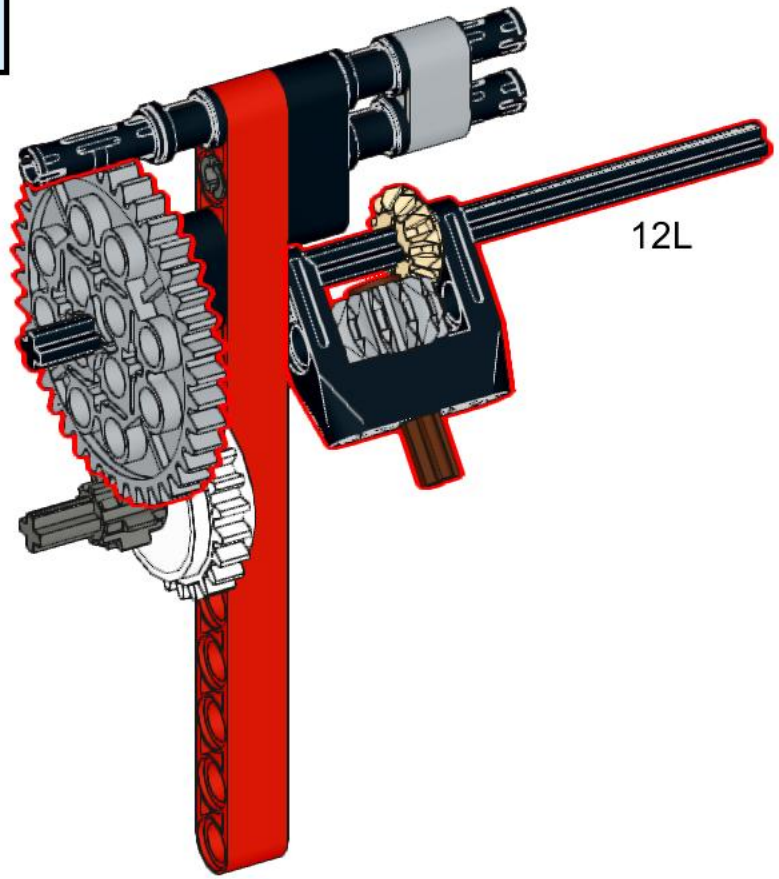

The Truss Wheel will be attached to this axle, at the rear.

230

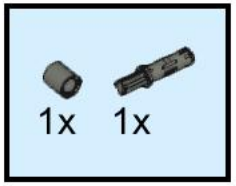

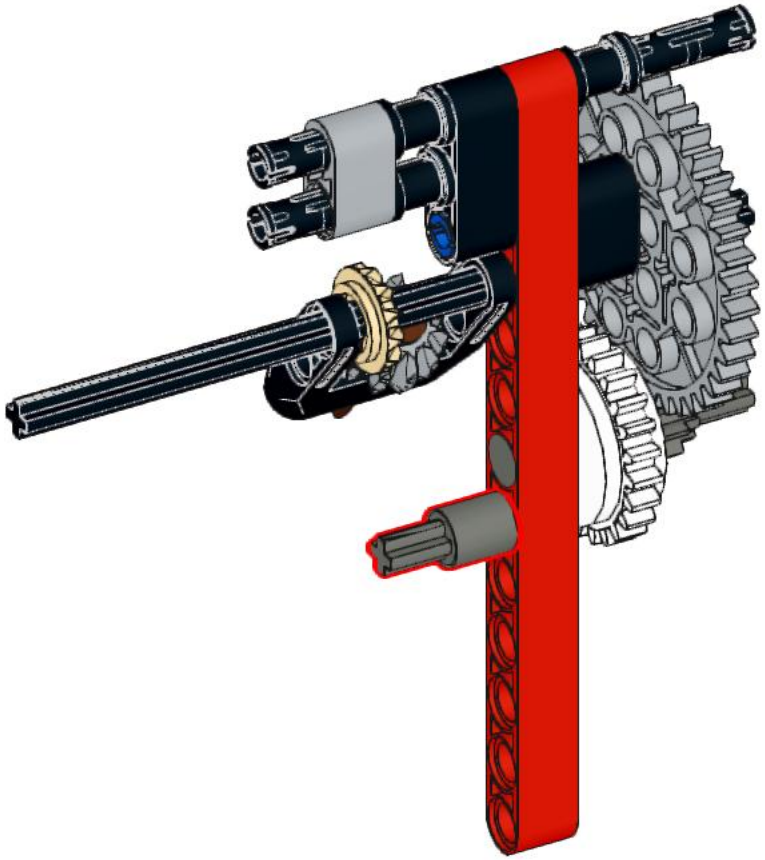

231

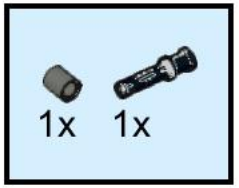

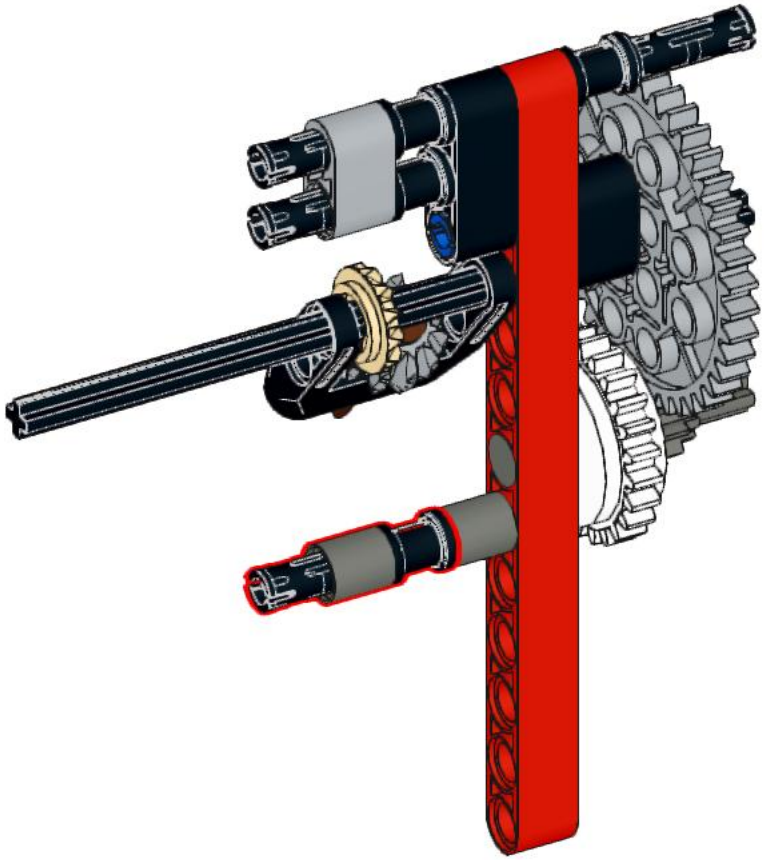

232

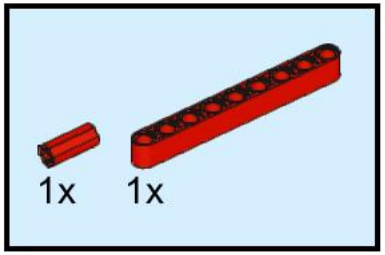

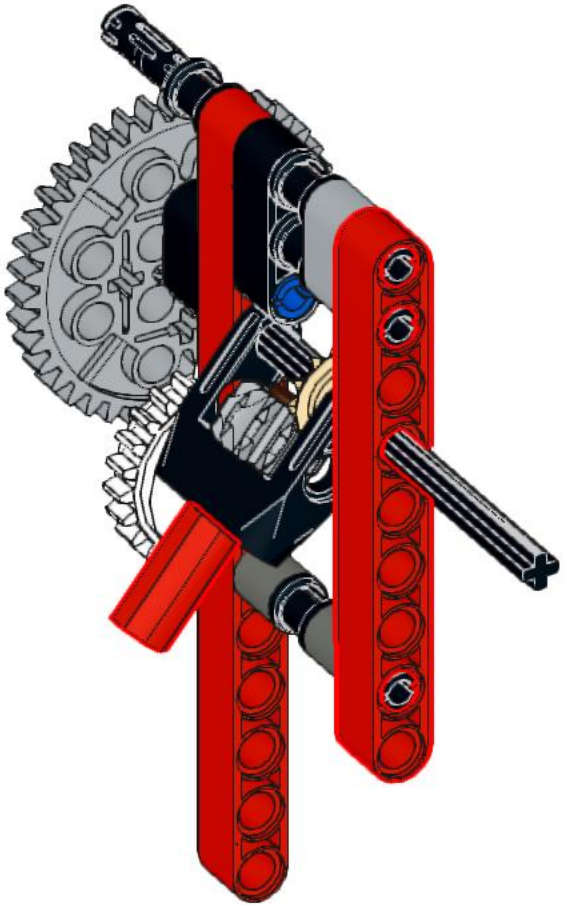

233

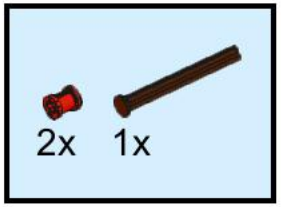

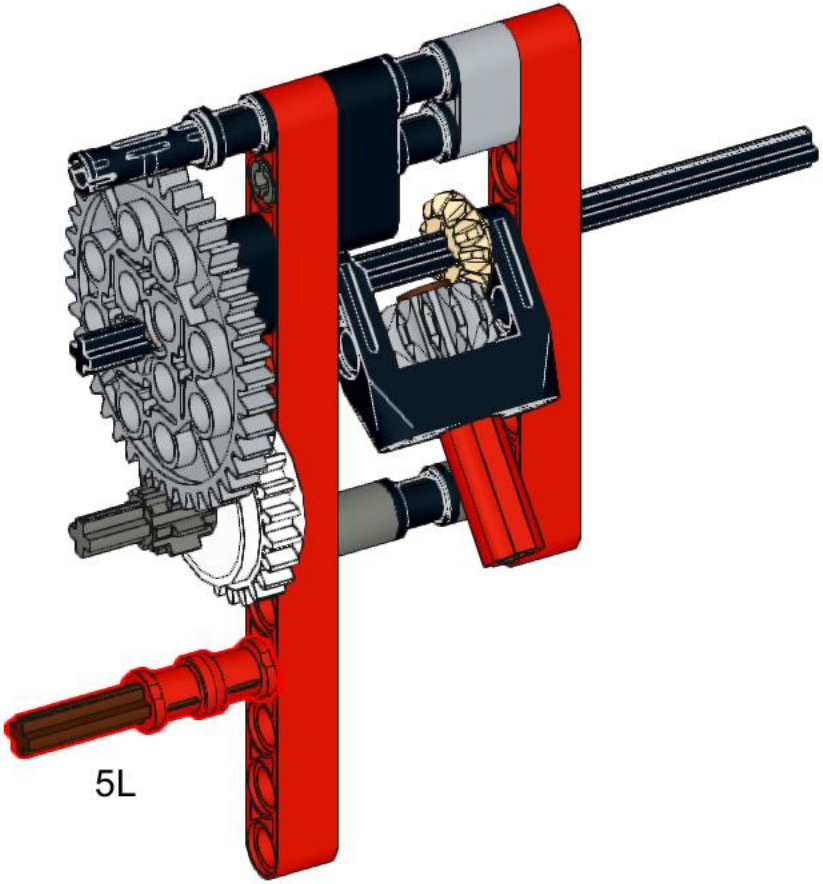

234

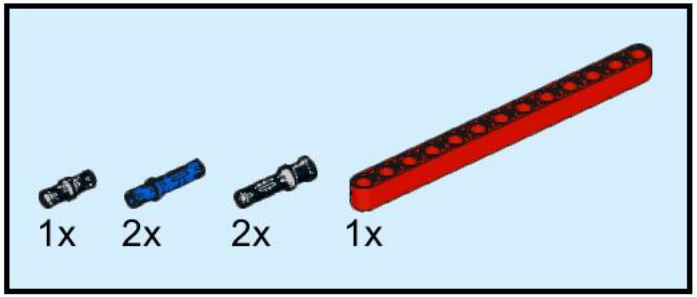

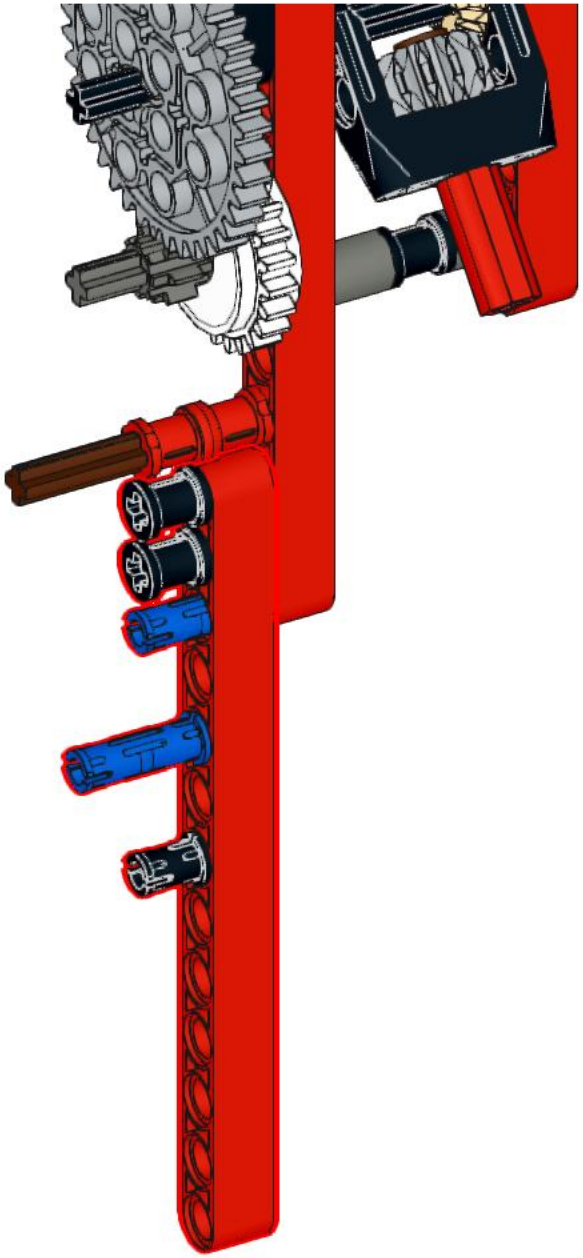

235

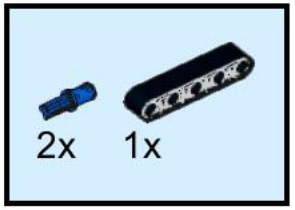

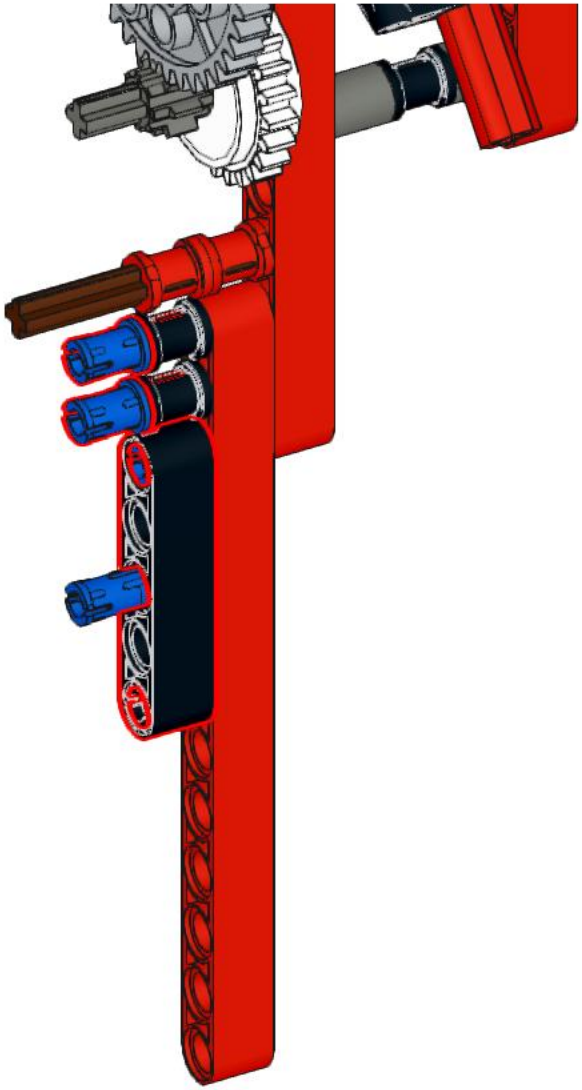

236

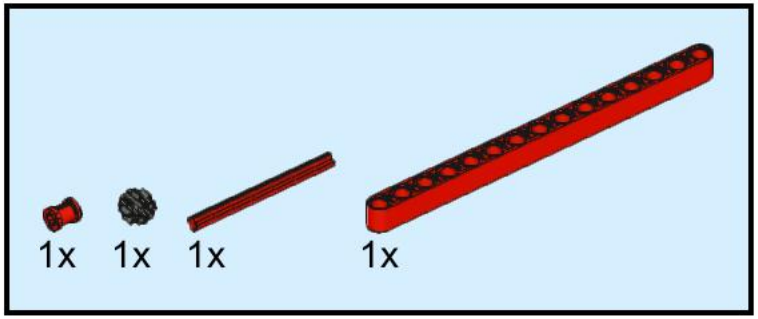

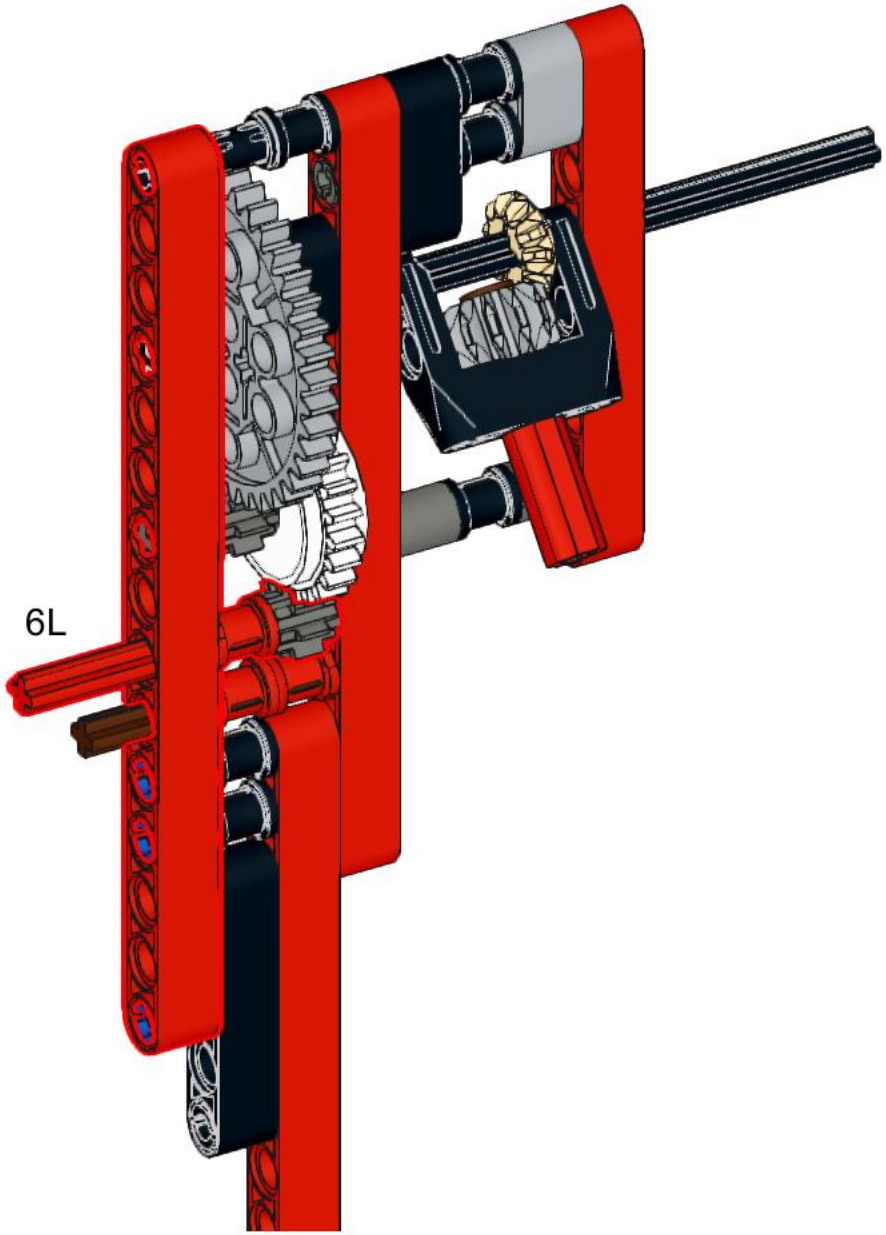

237

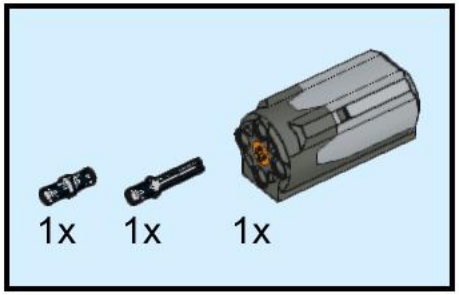

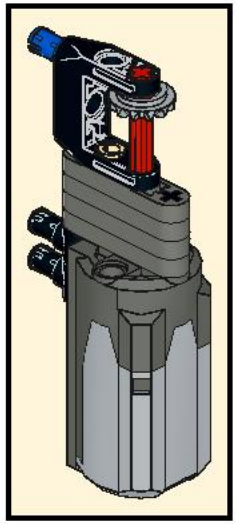

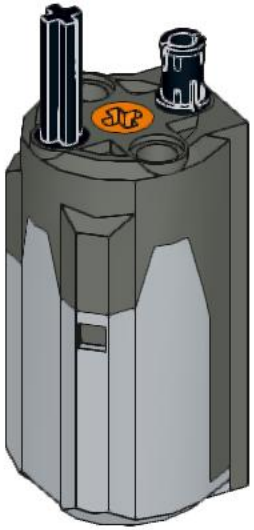

238

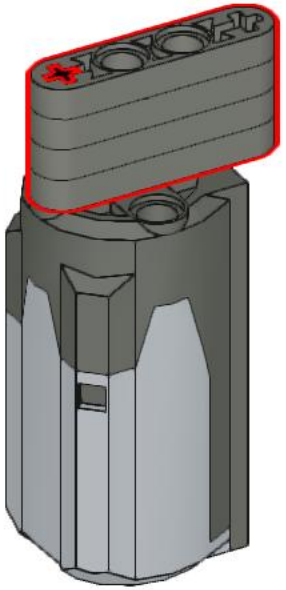

239

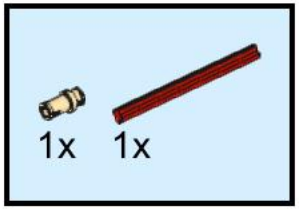

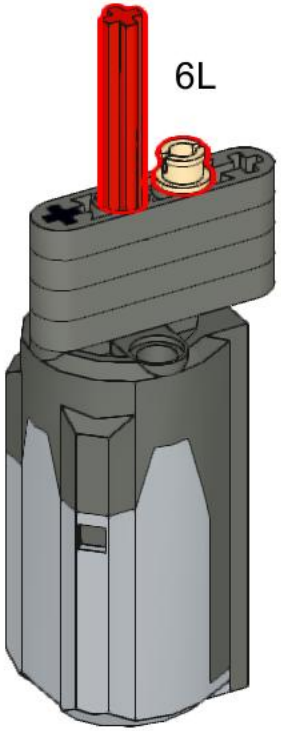

240

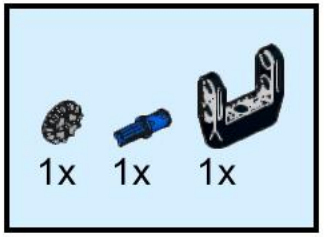

241

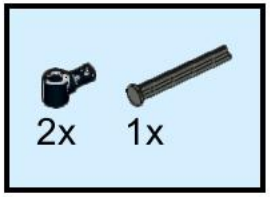

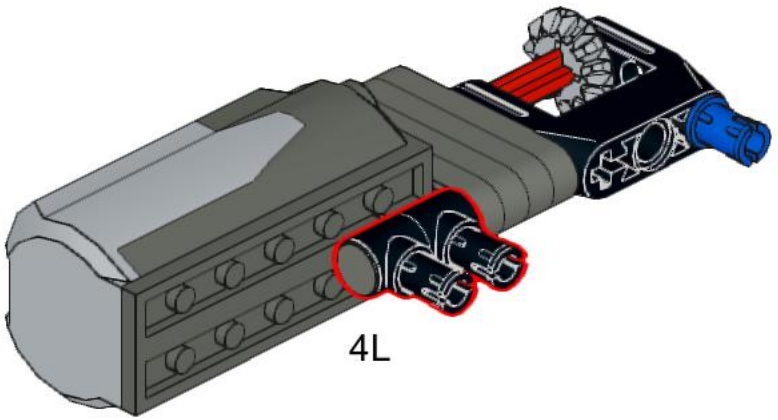

242

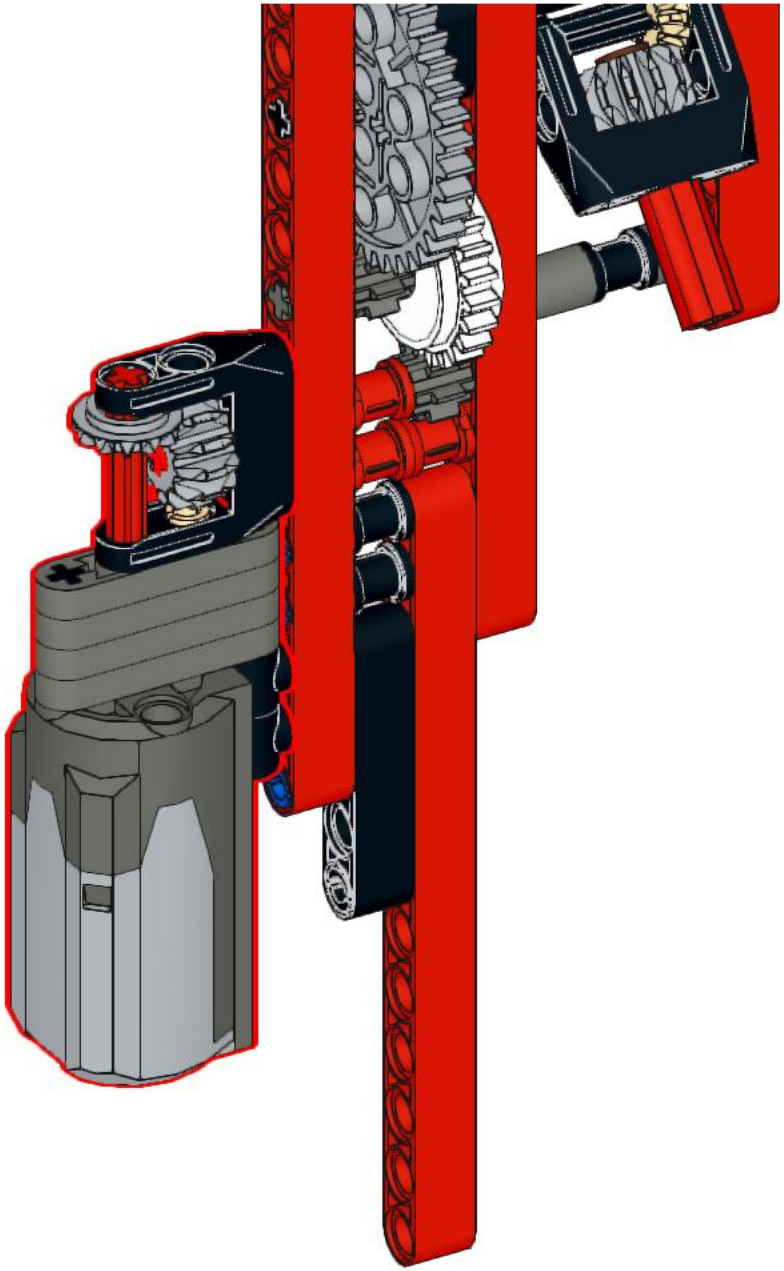

243

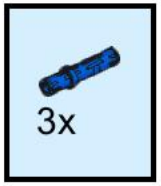

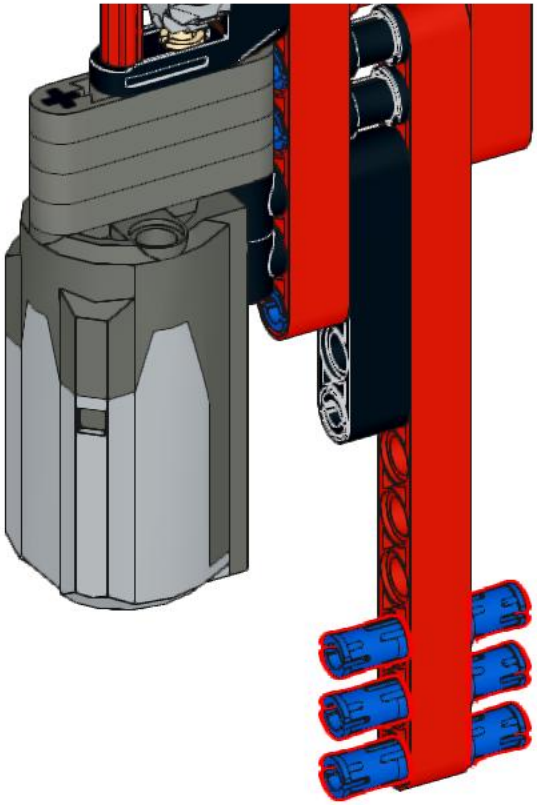

244

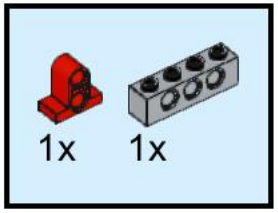

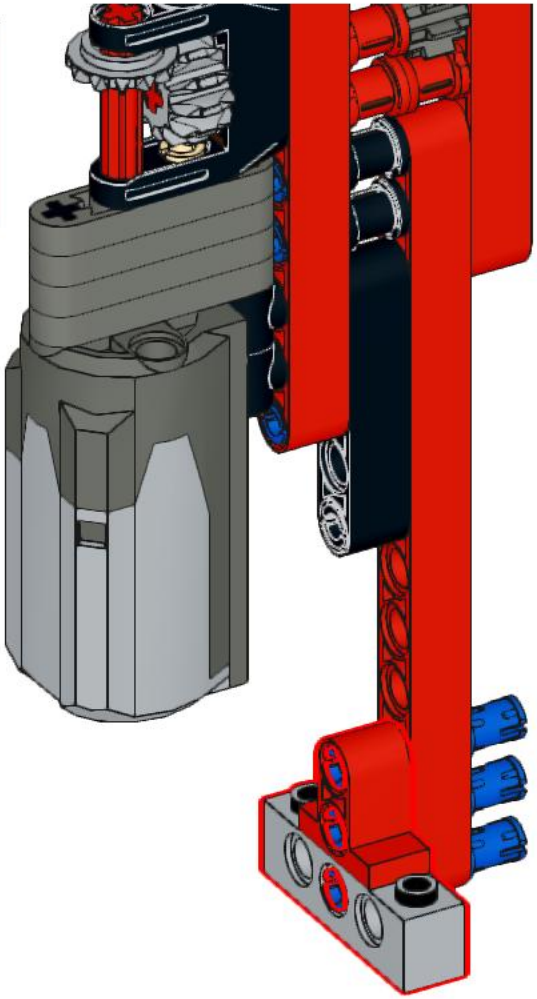

245

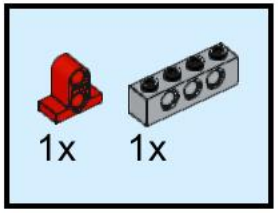

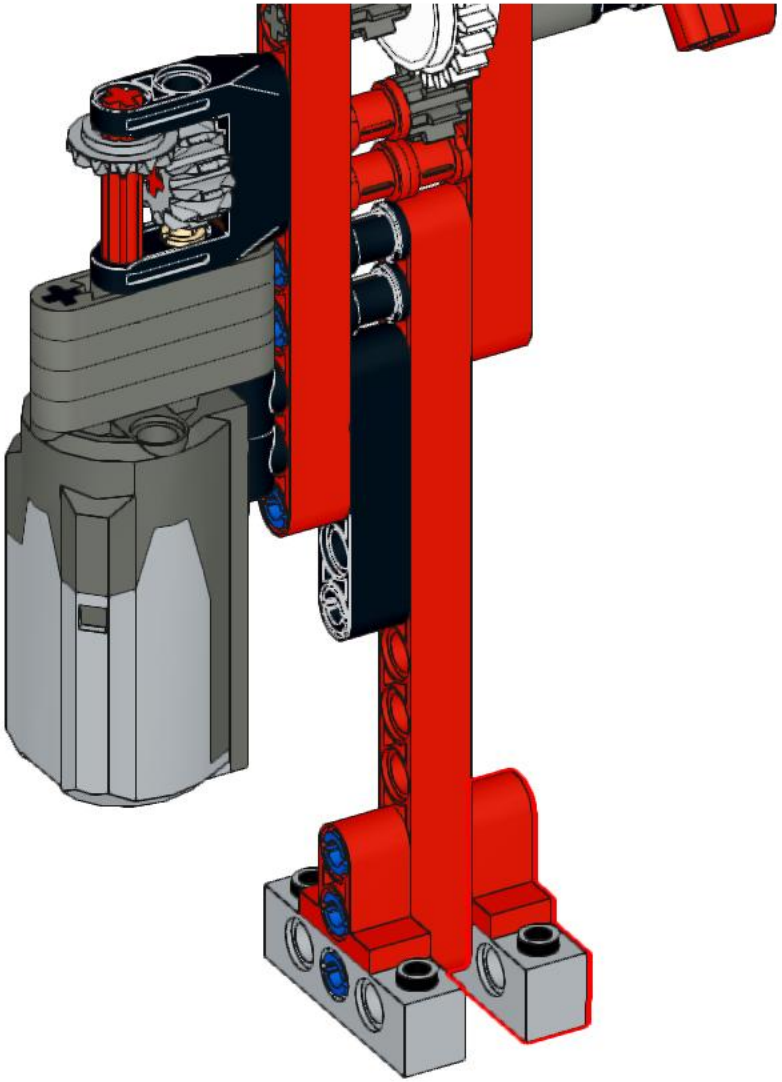

246

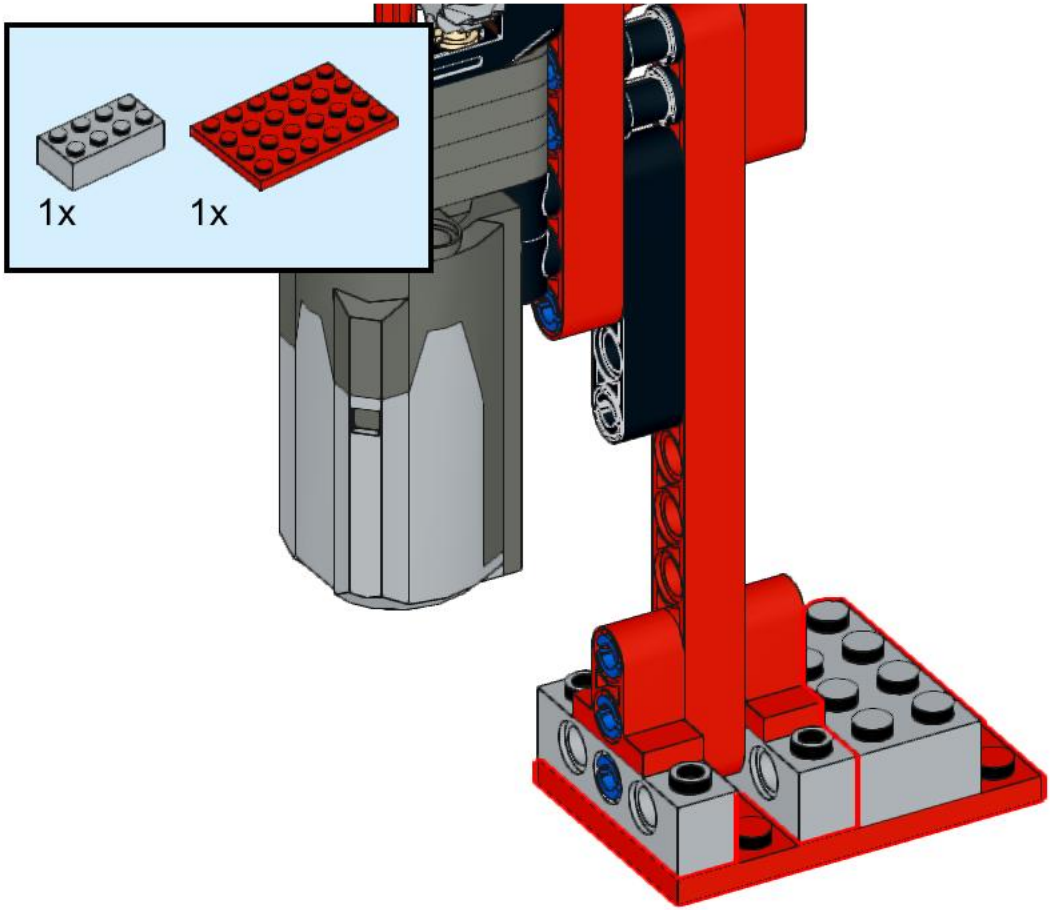

247

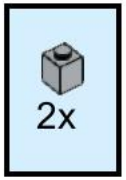

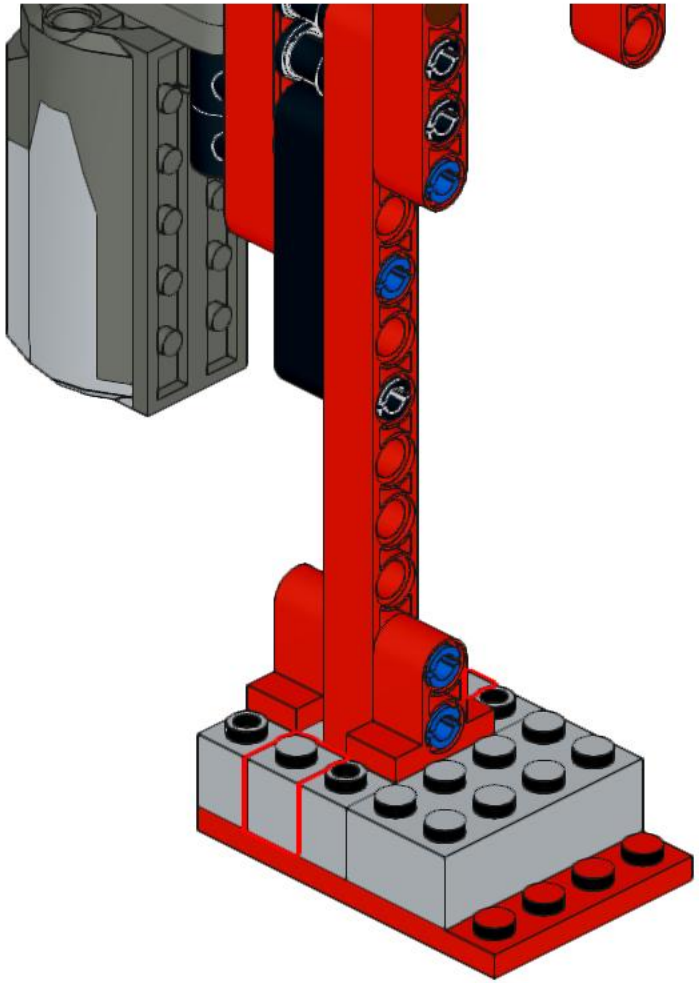

248

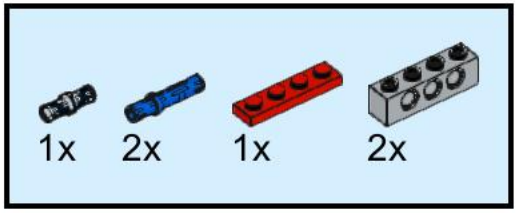

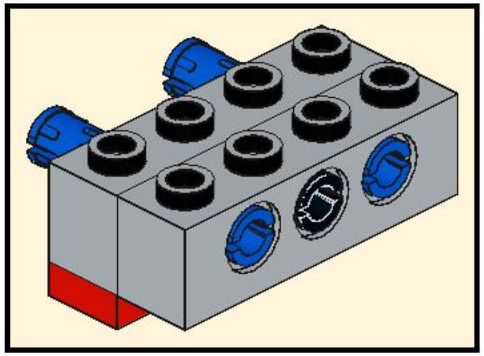

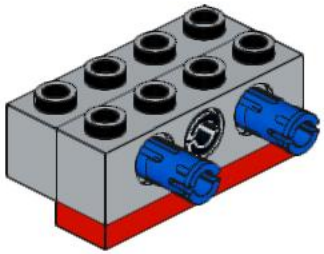

249

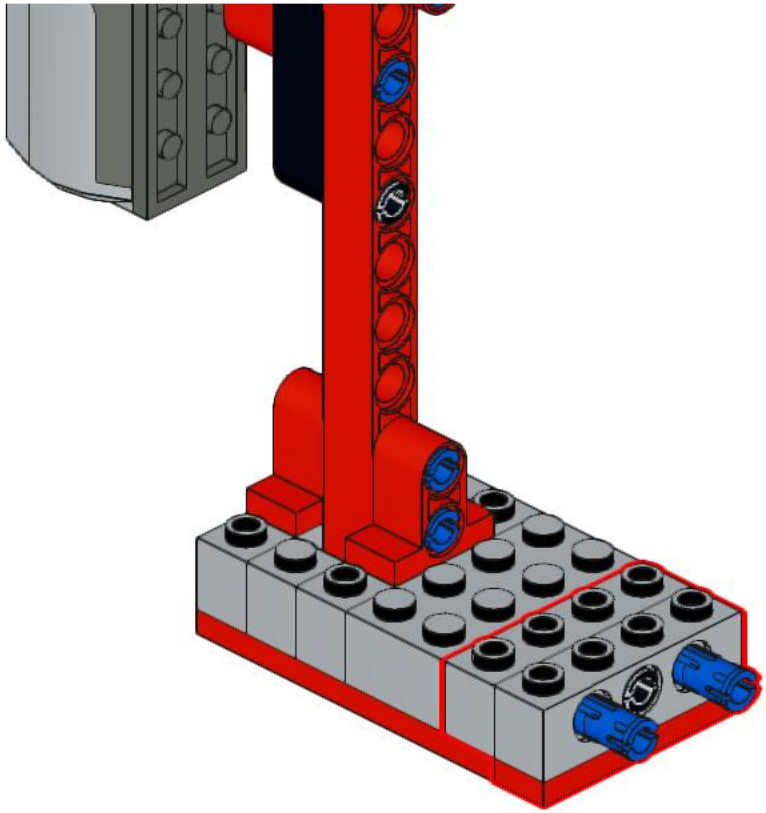

250

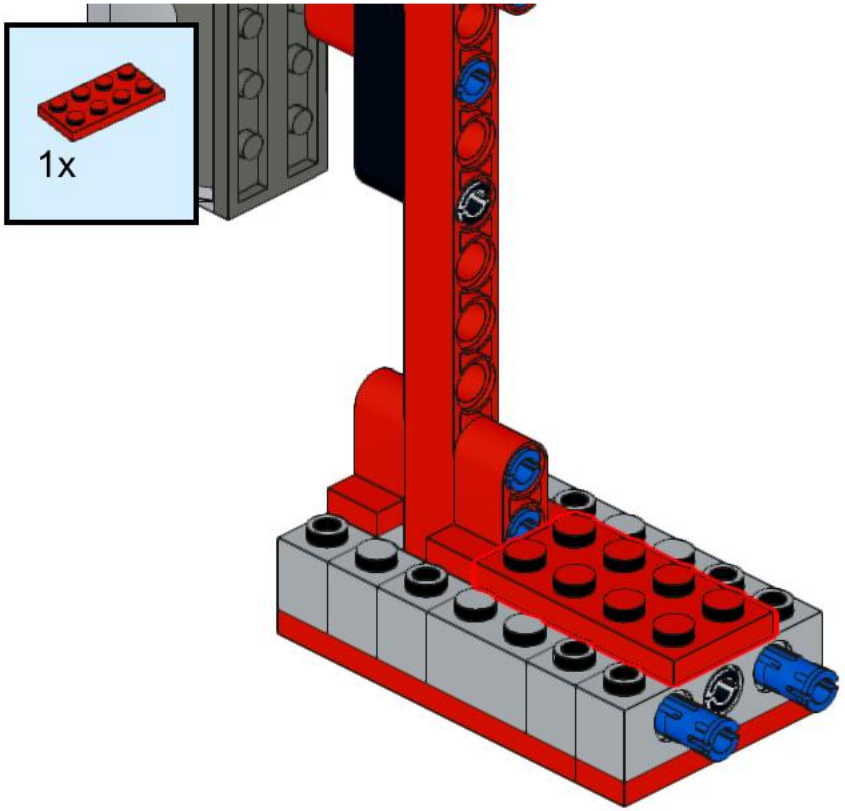

251

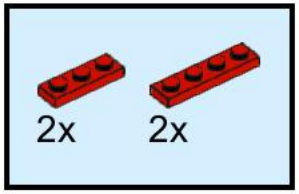

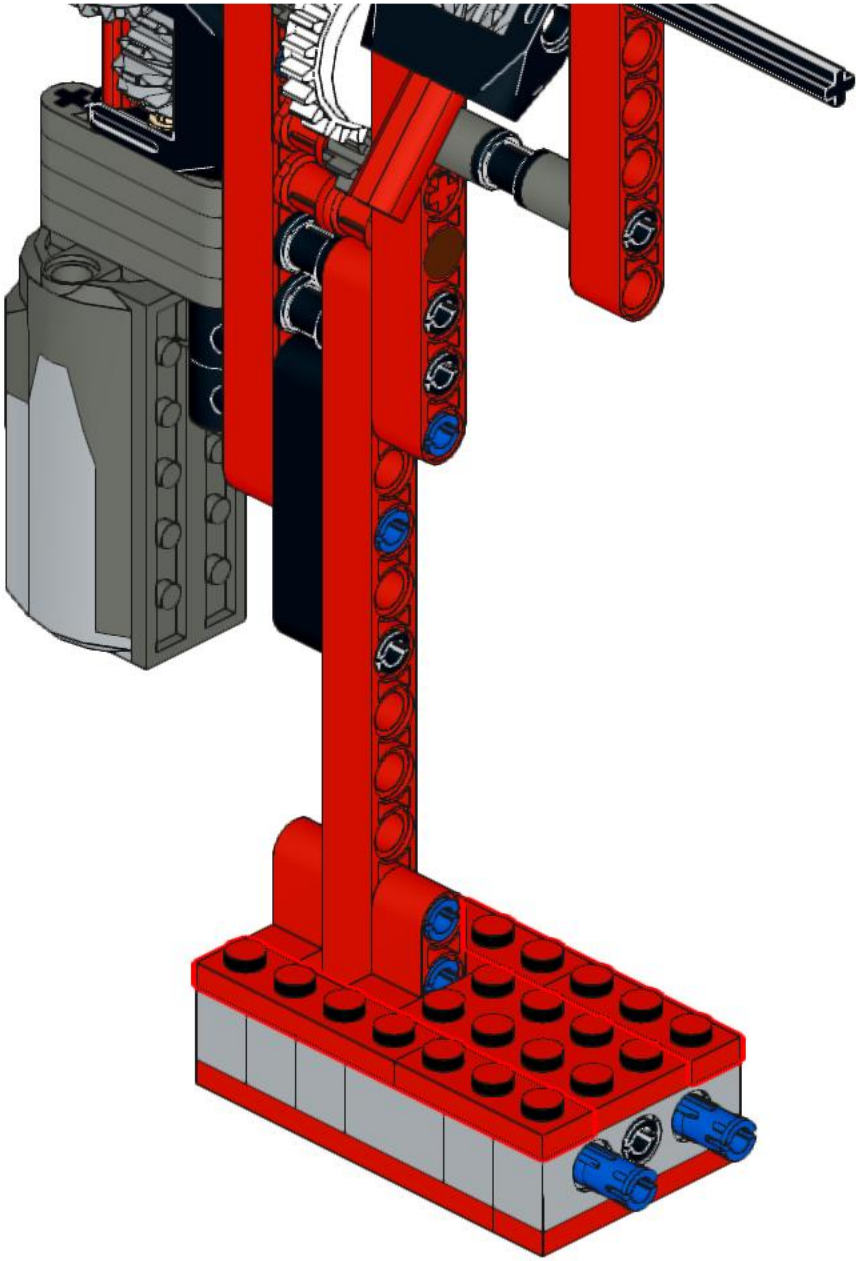

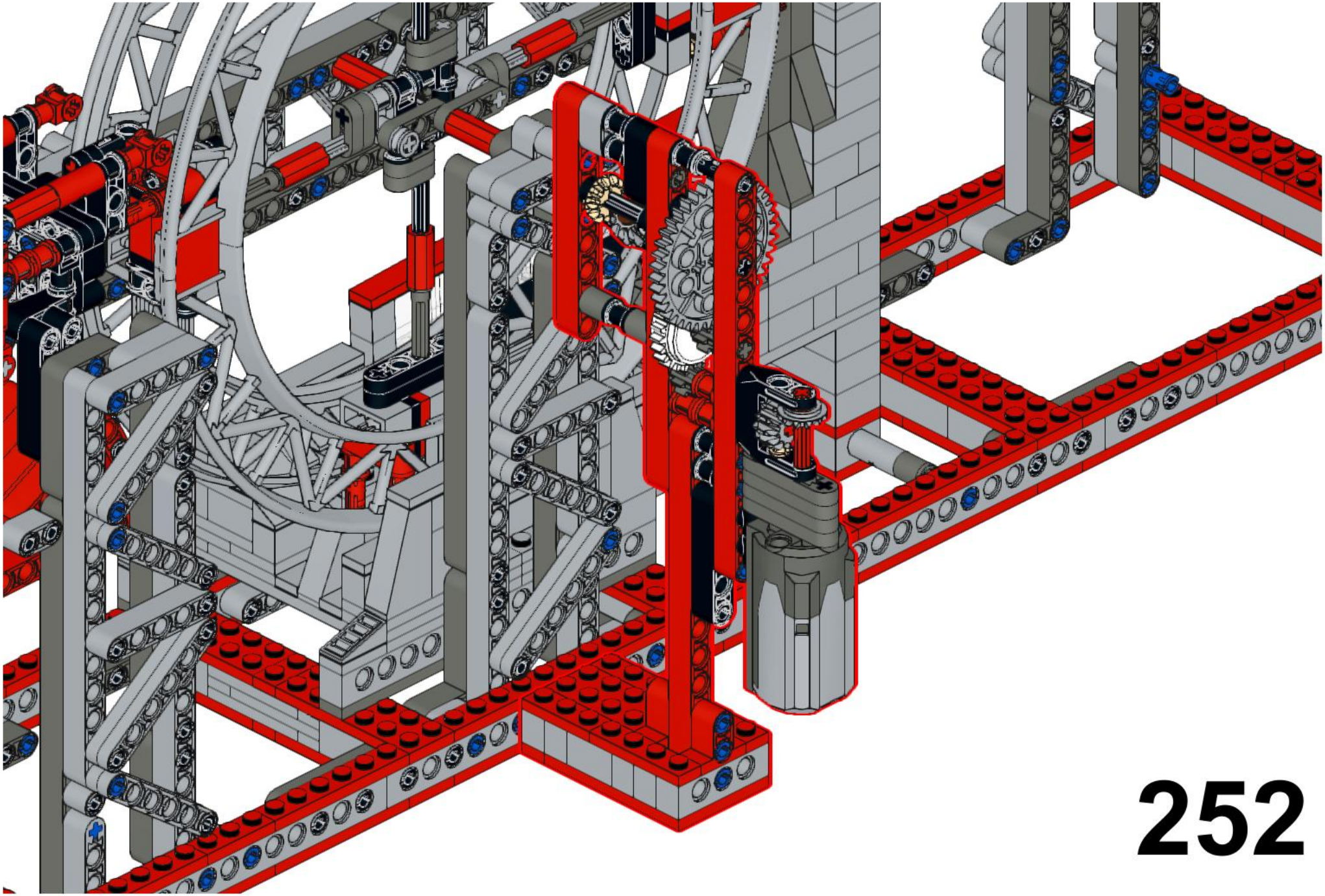

253

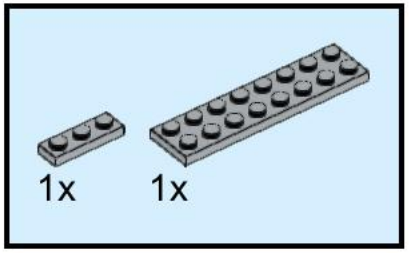

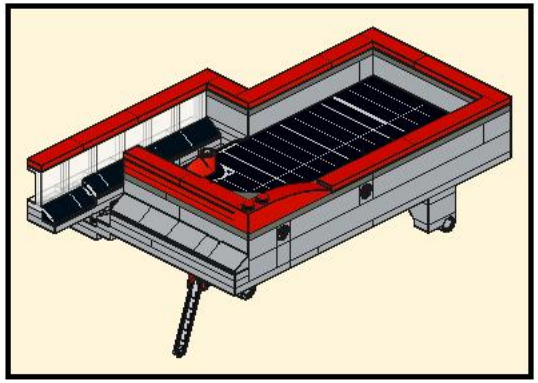

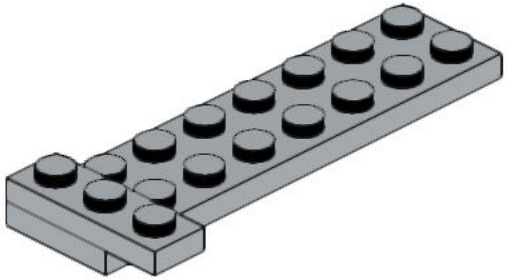

254

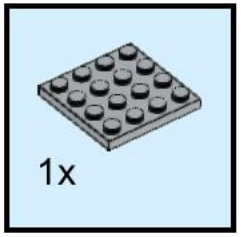

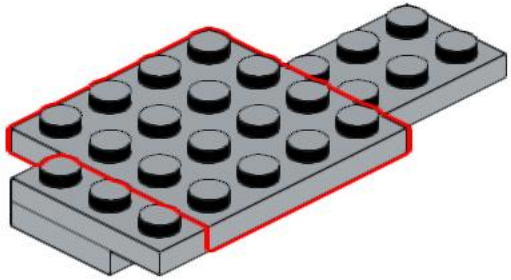

255

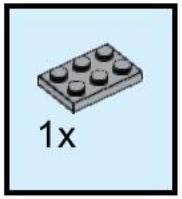

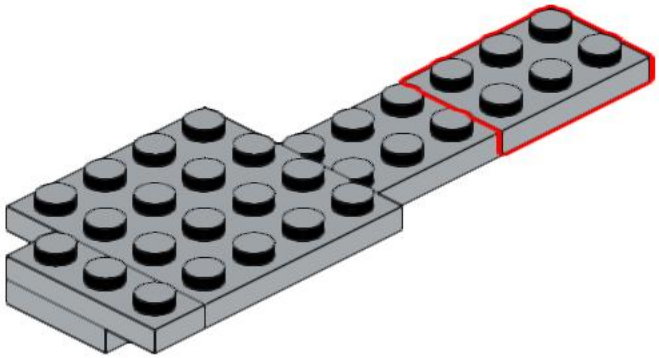

256

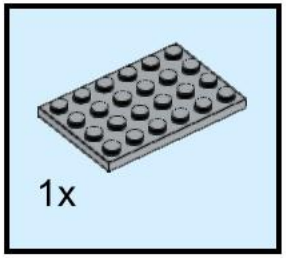

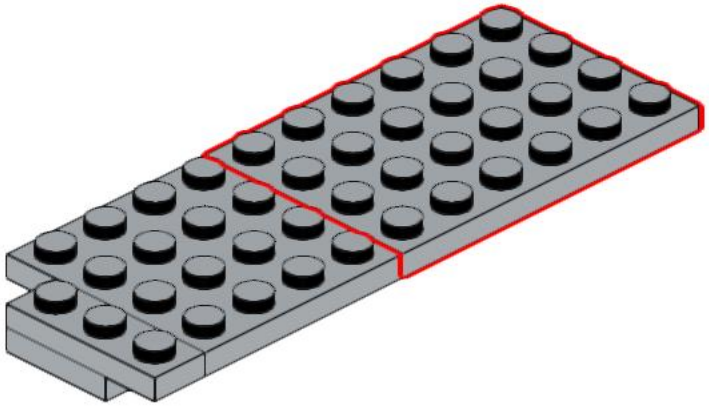

257

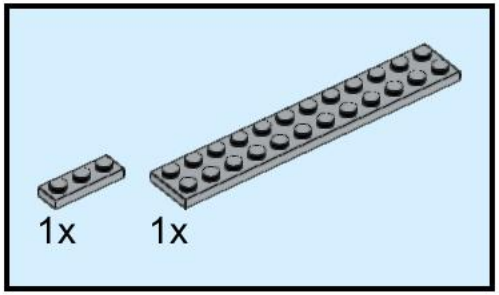

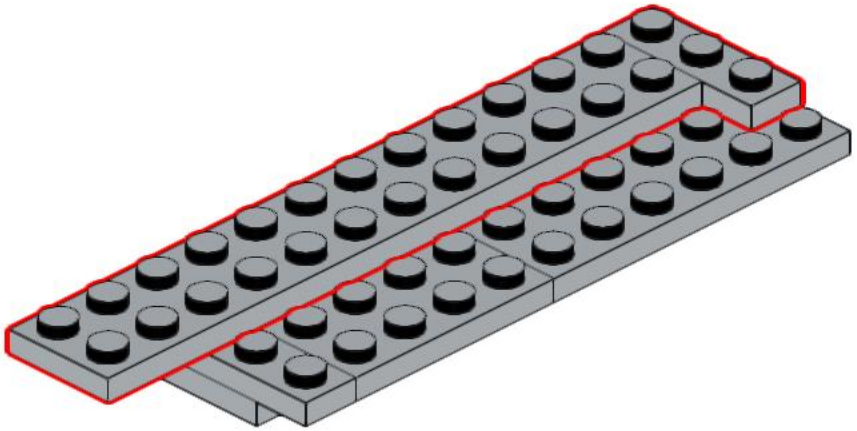

258

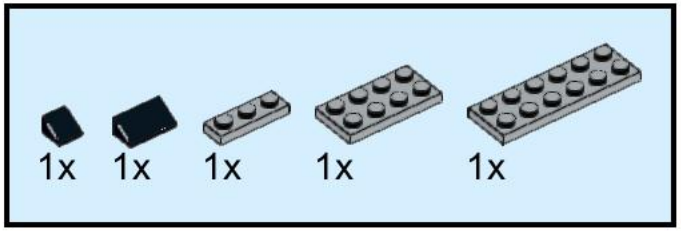

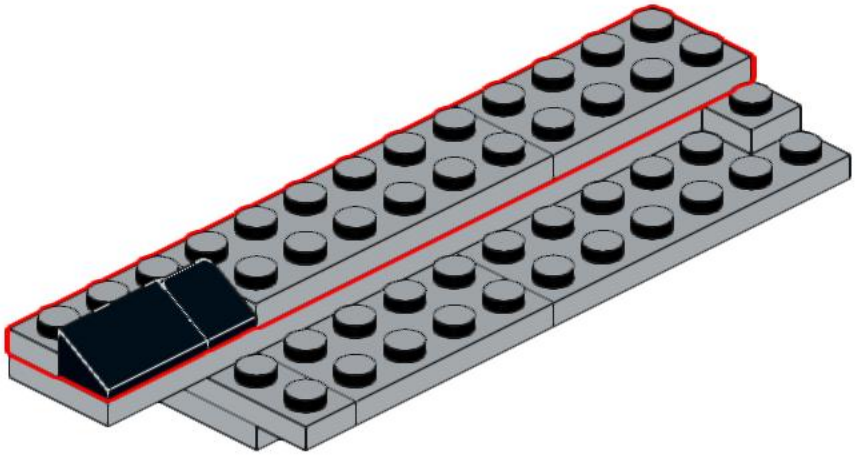

259

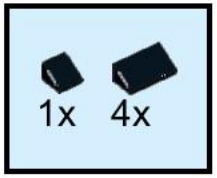

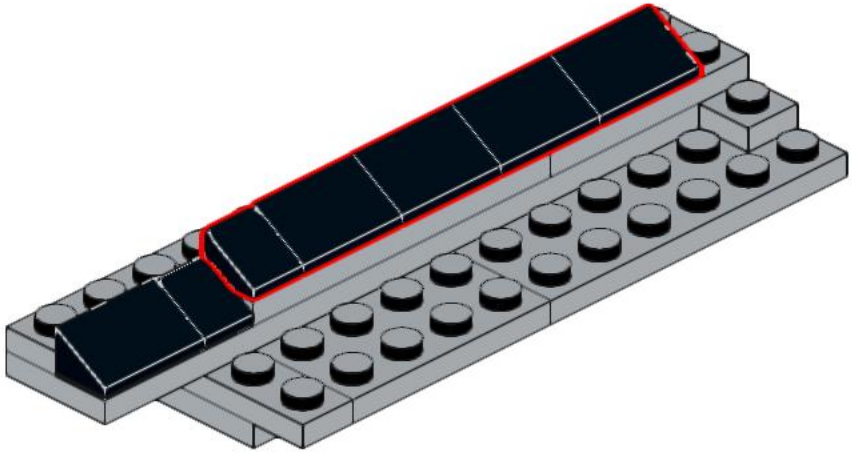

260

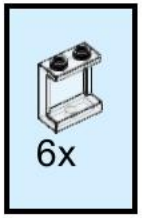

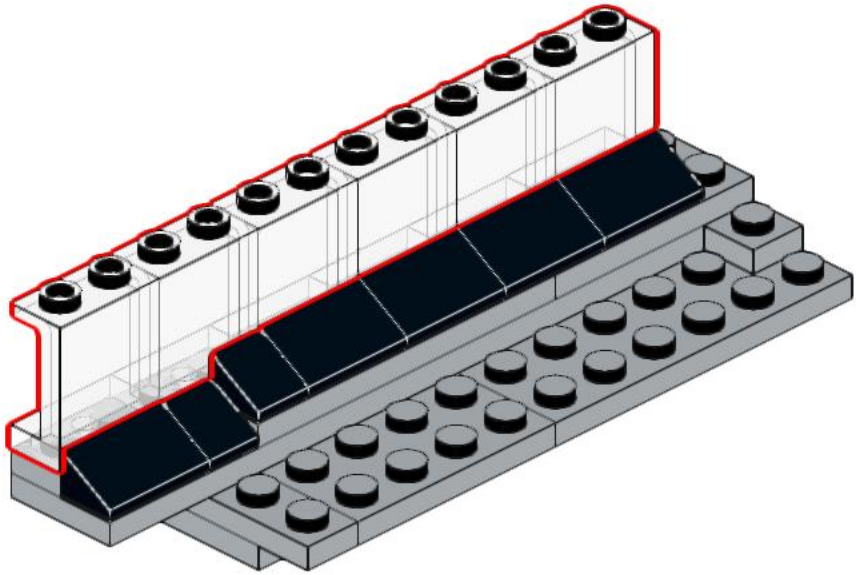

261

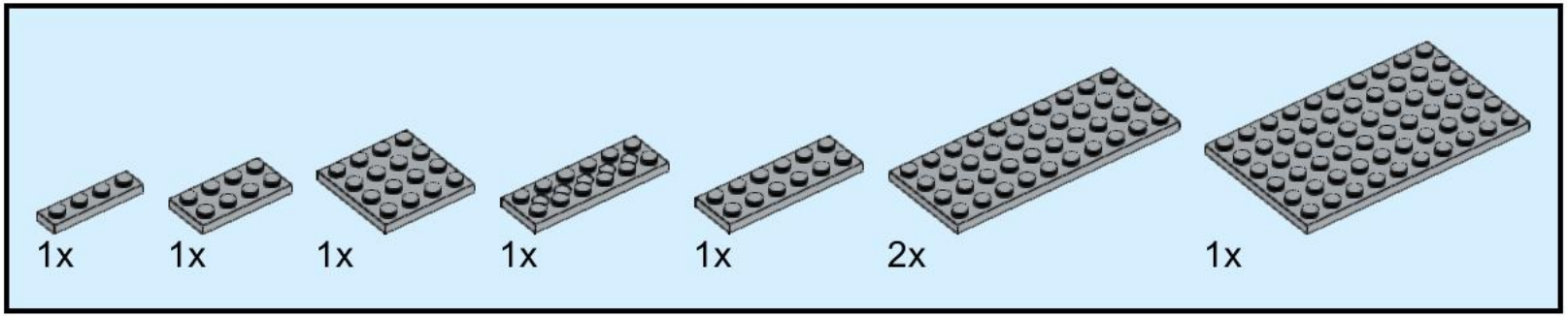

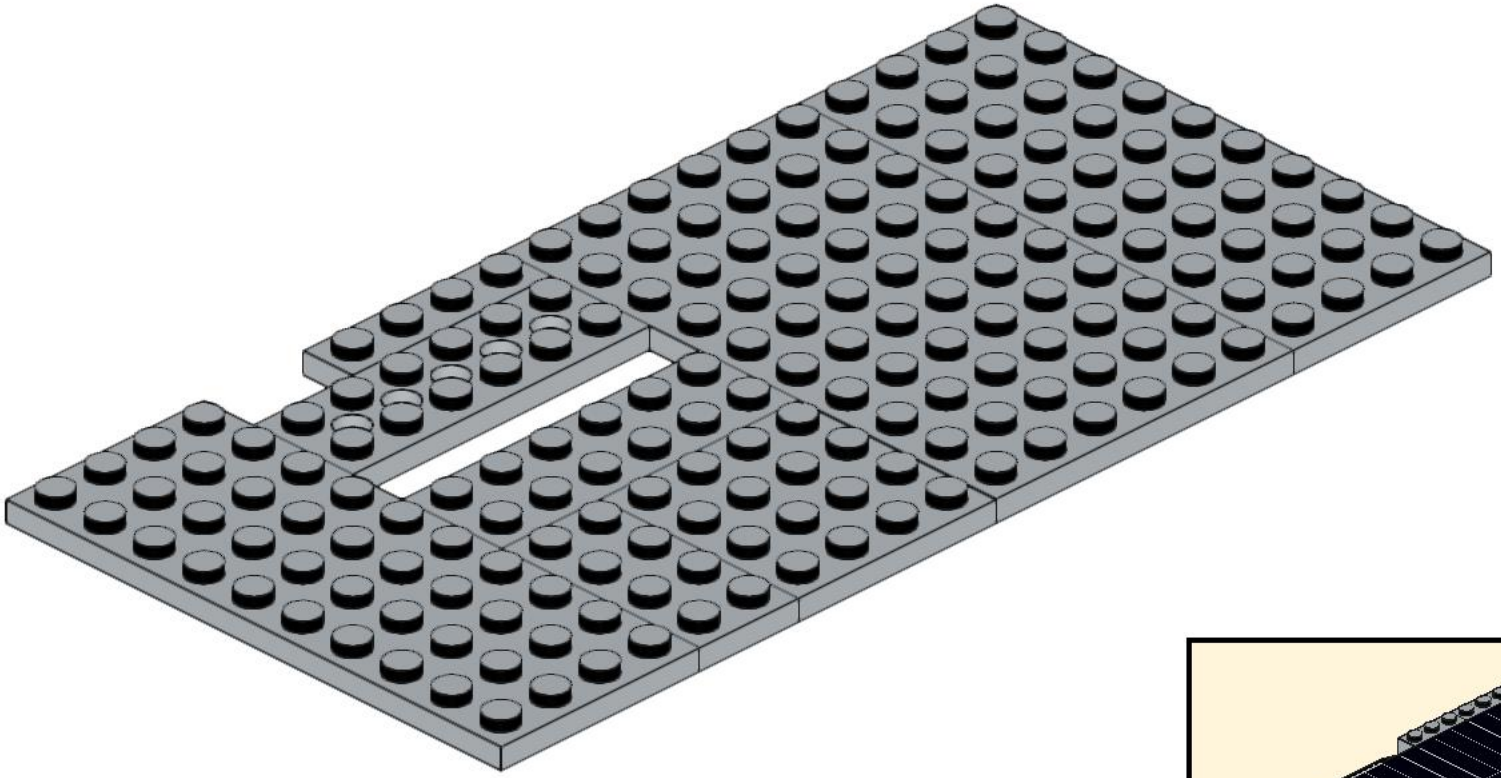

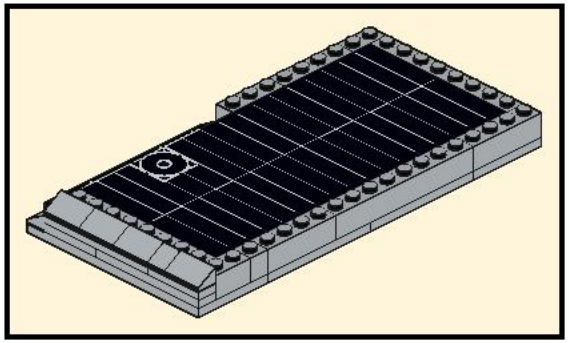

262

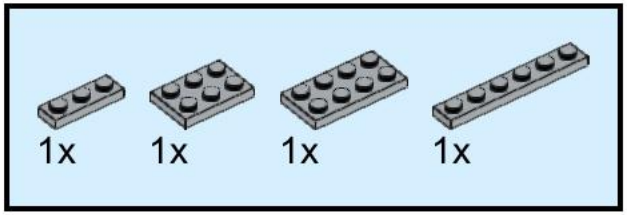

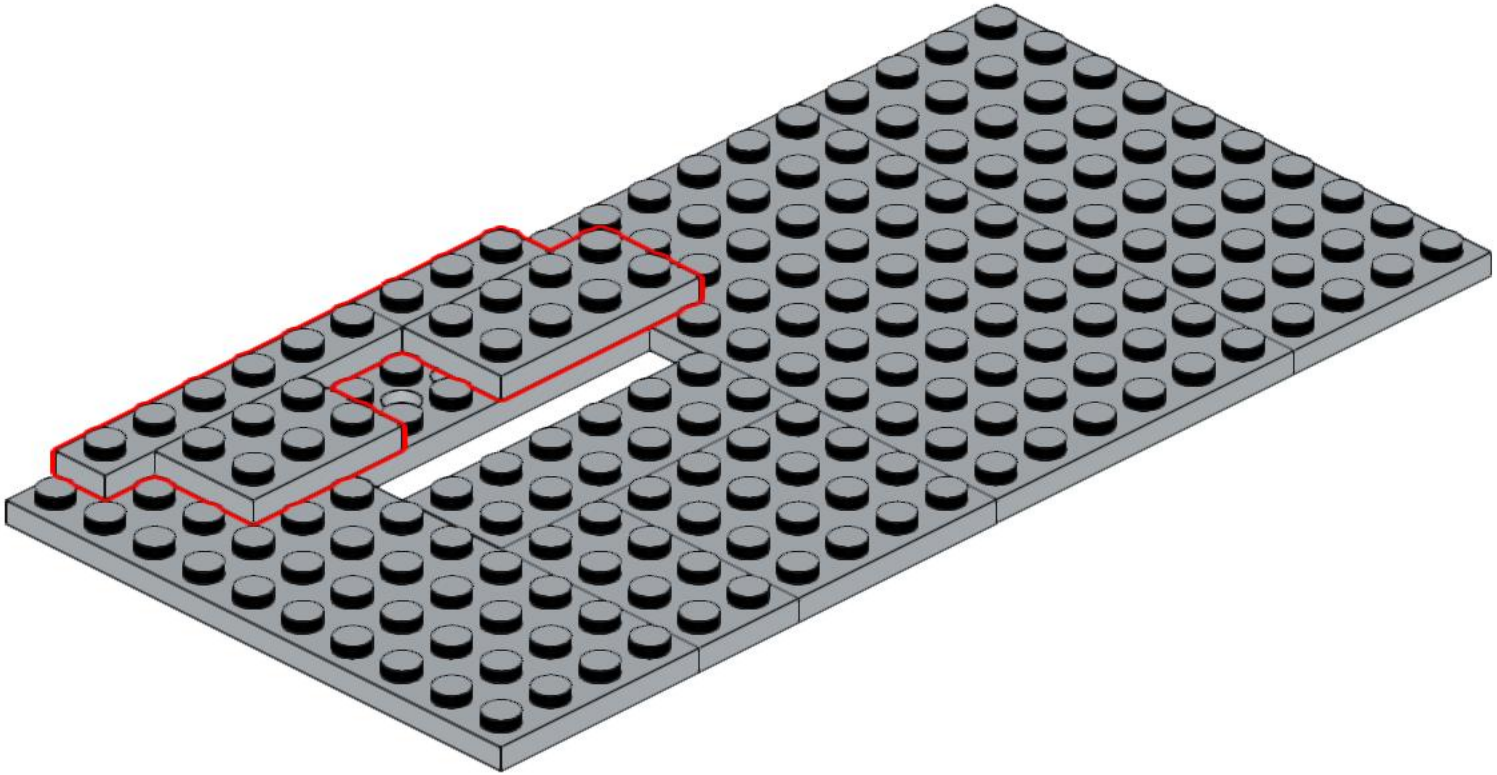

263

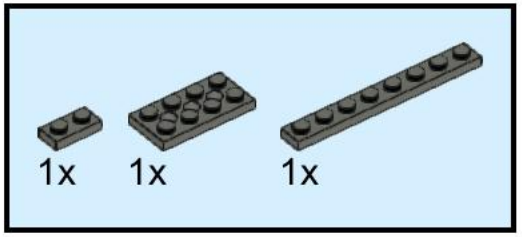

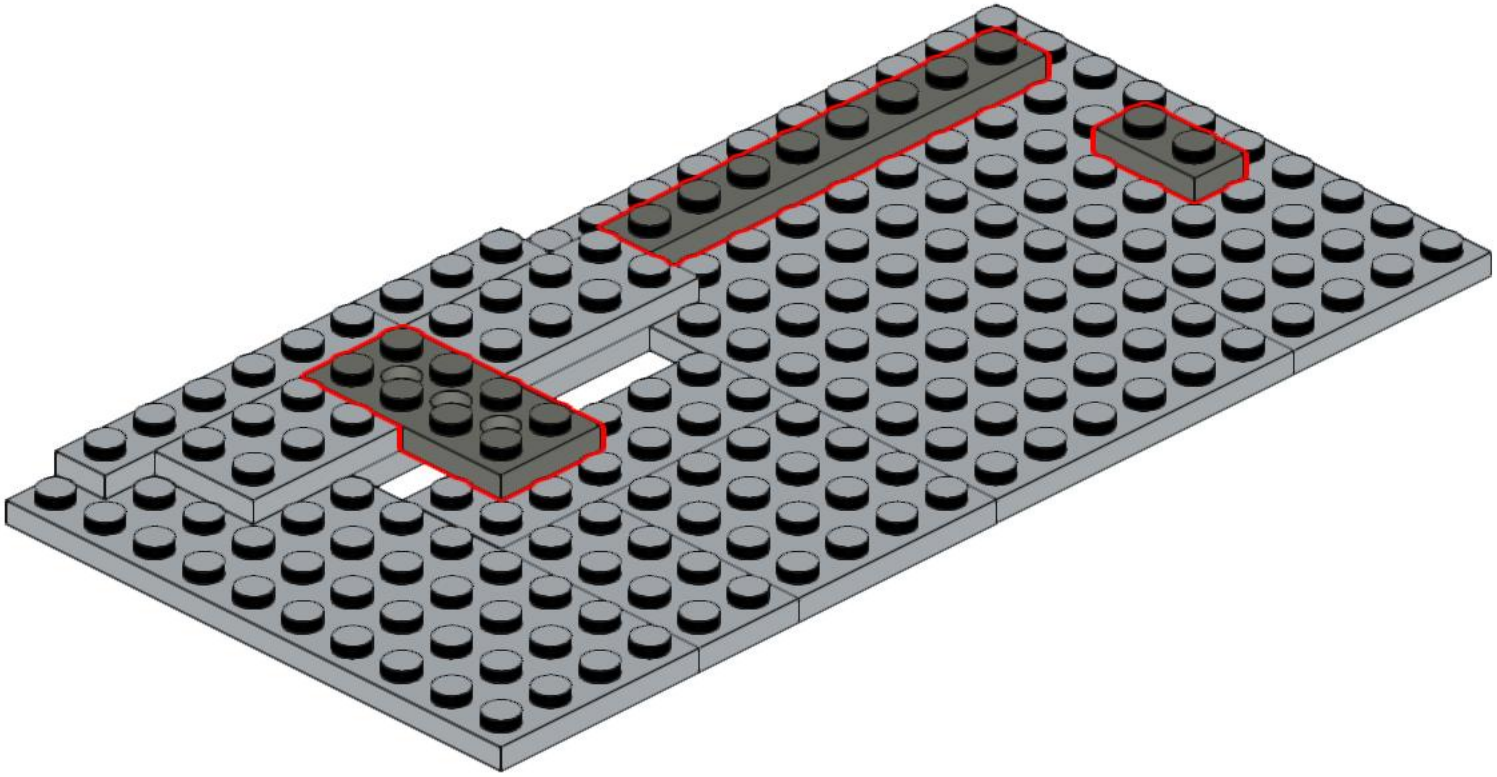

264

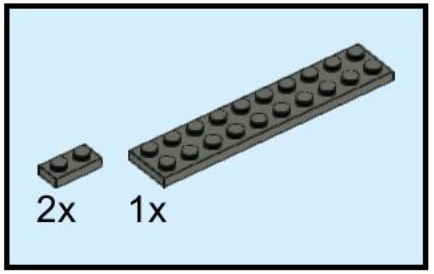

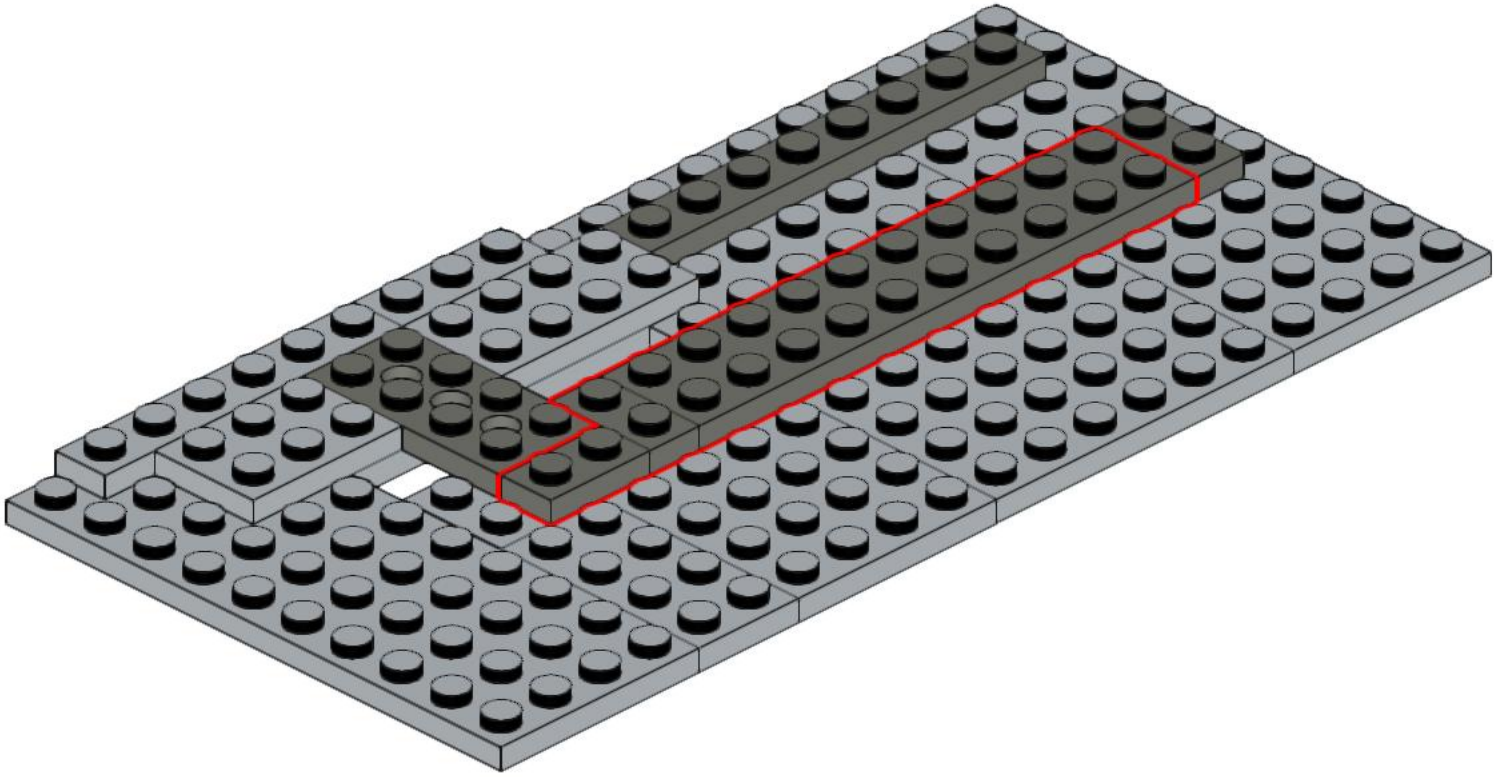

265

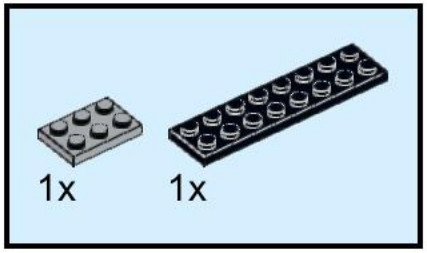

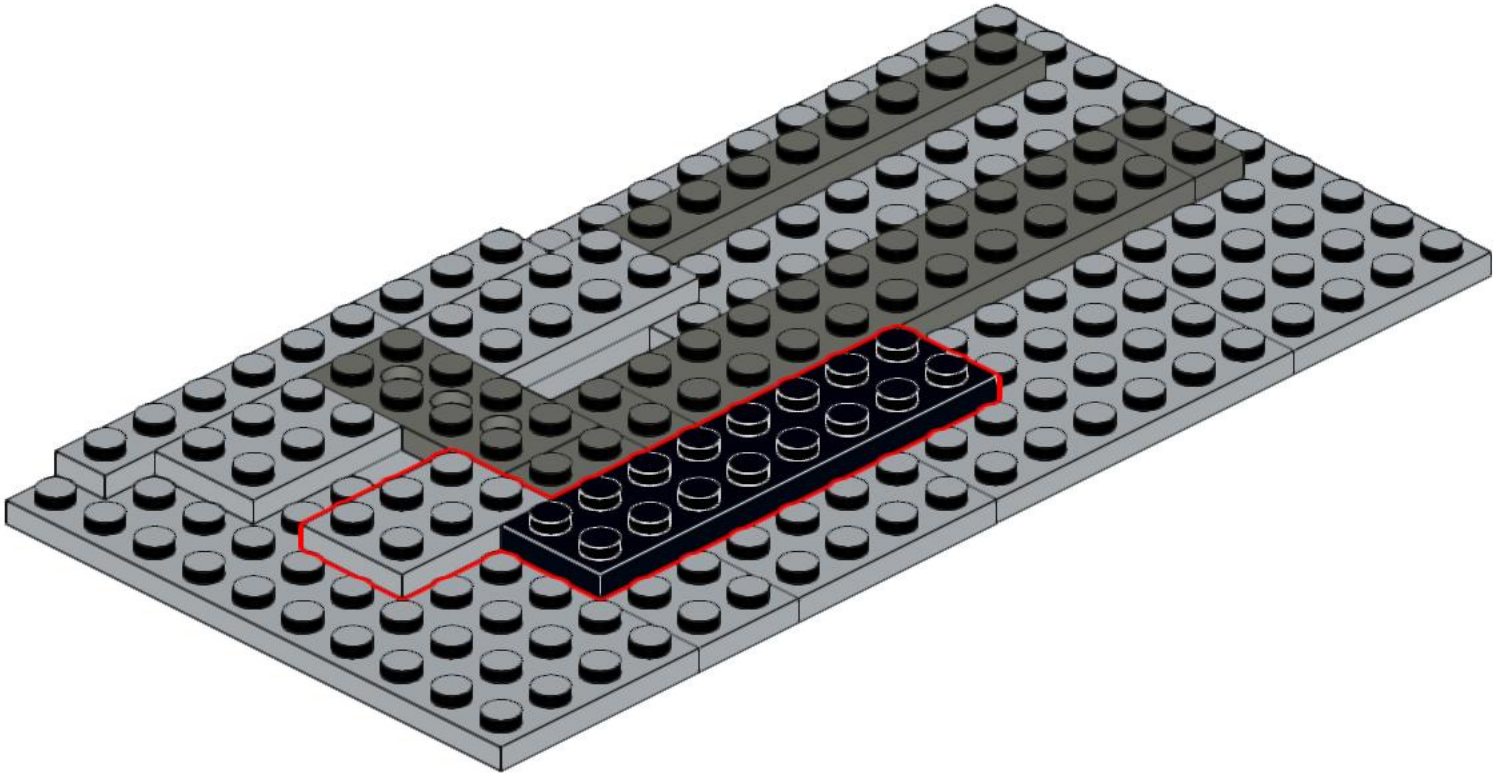

266

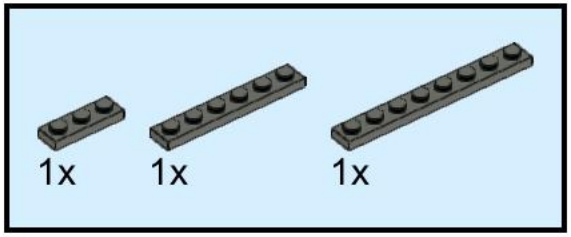

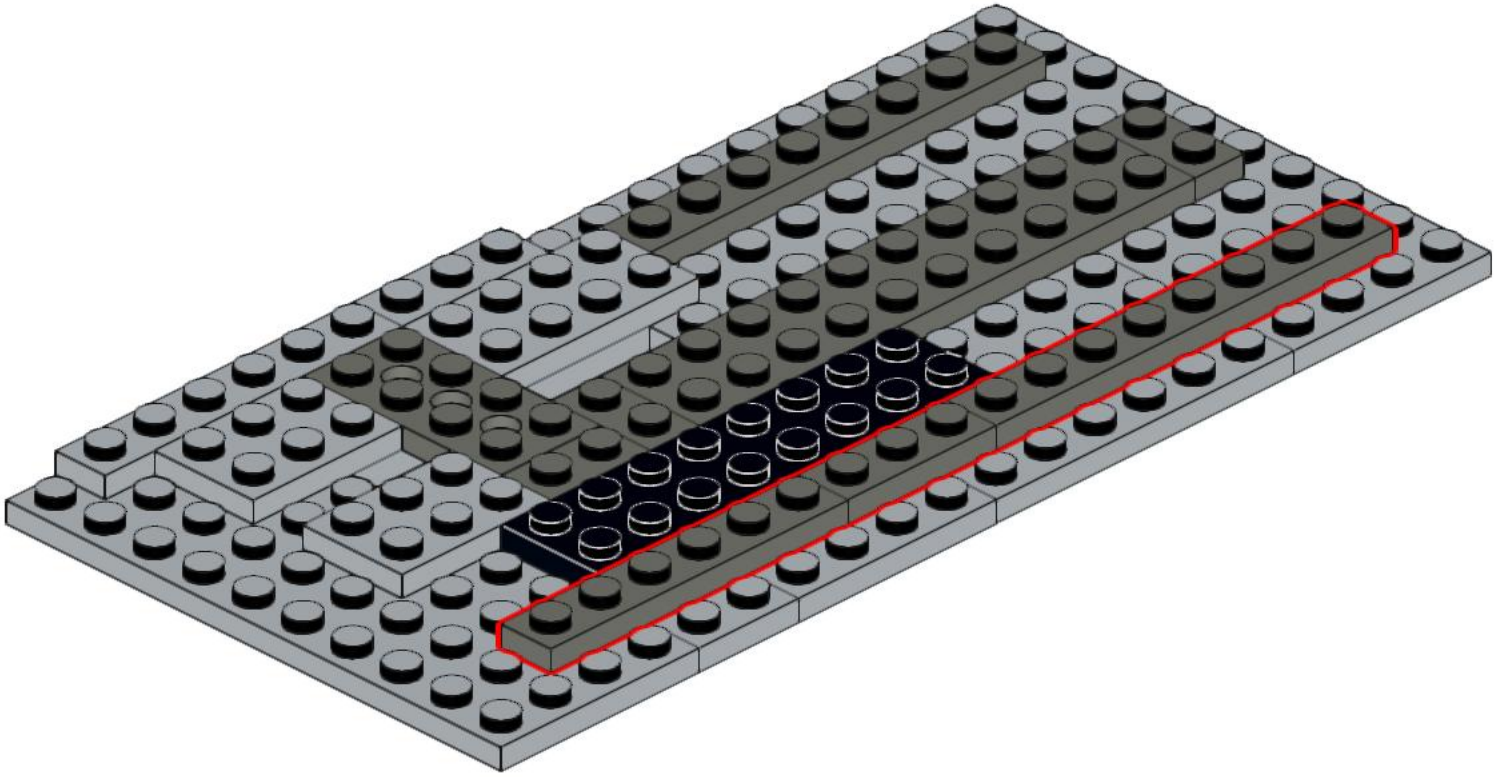

267

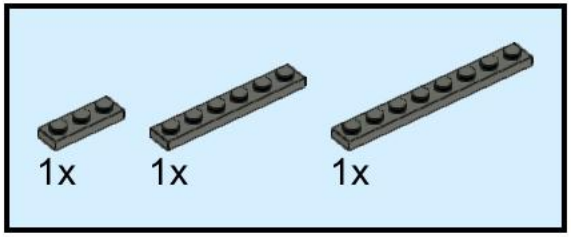

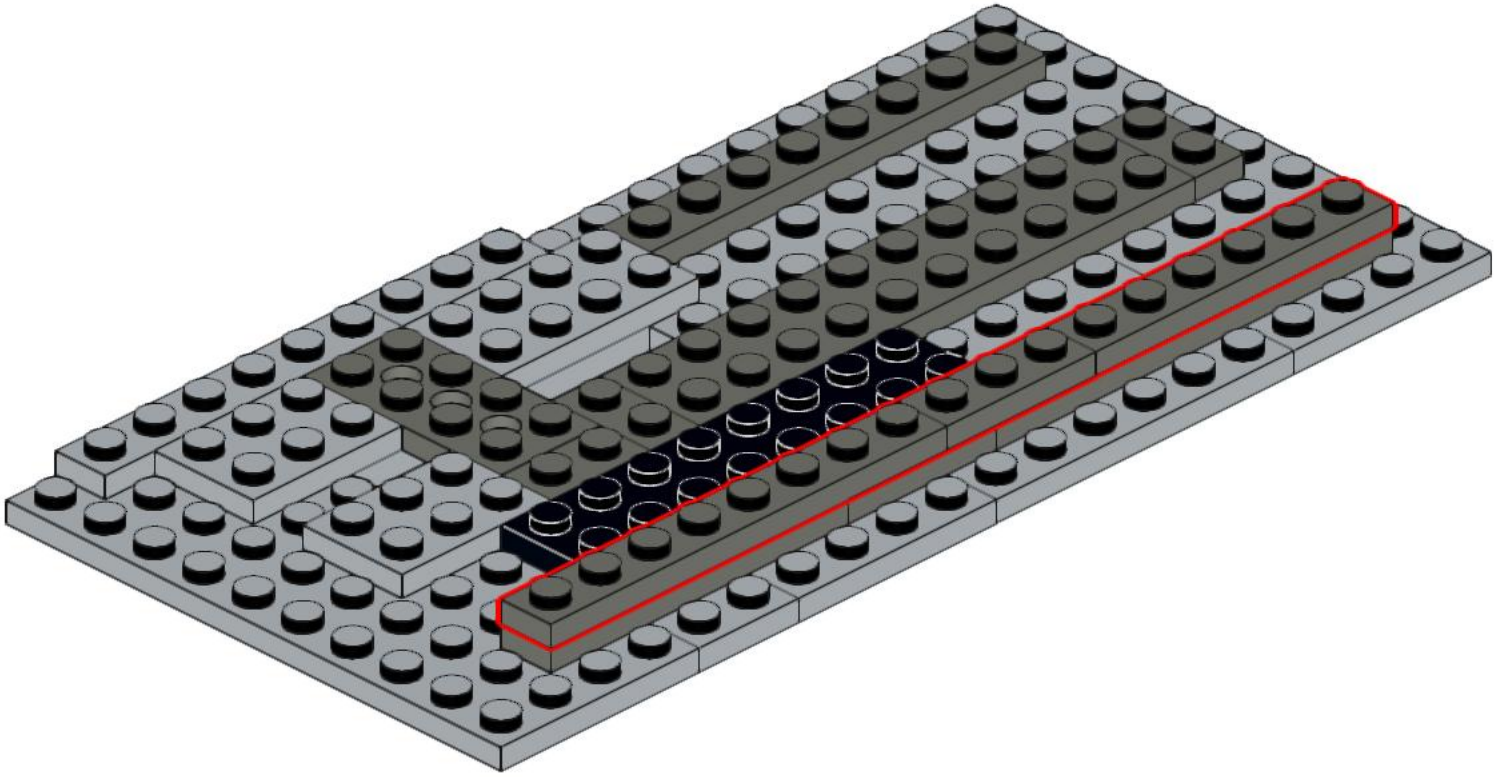

268

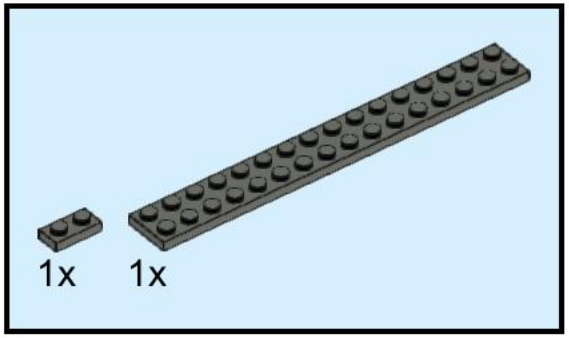

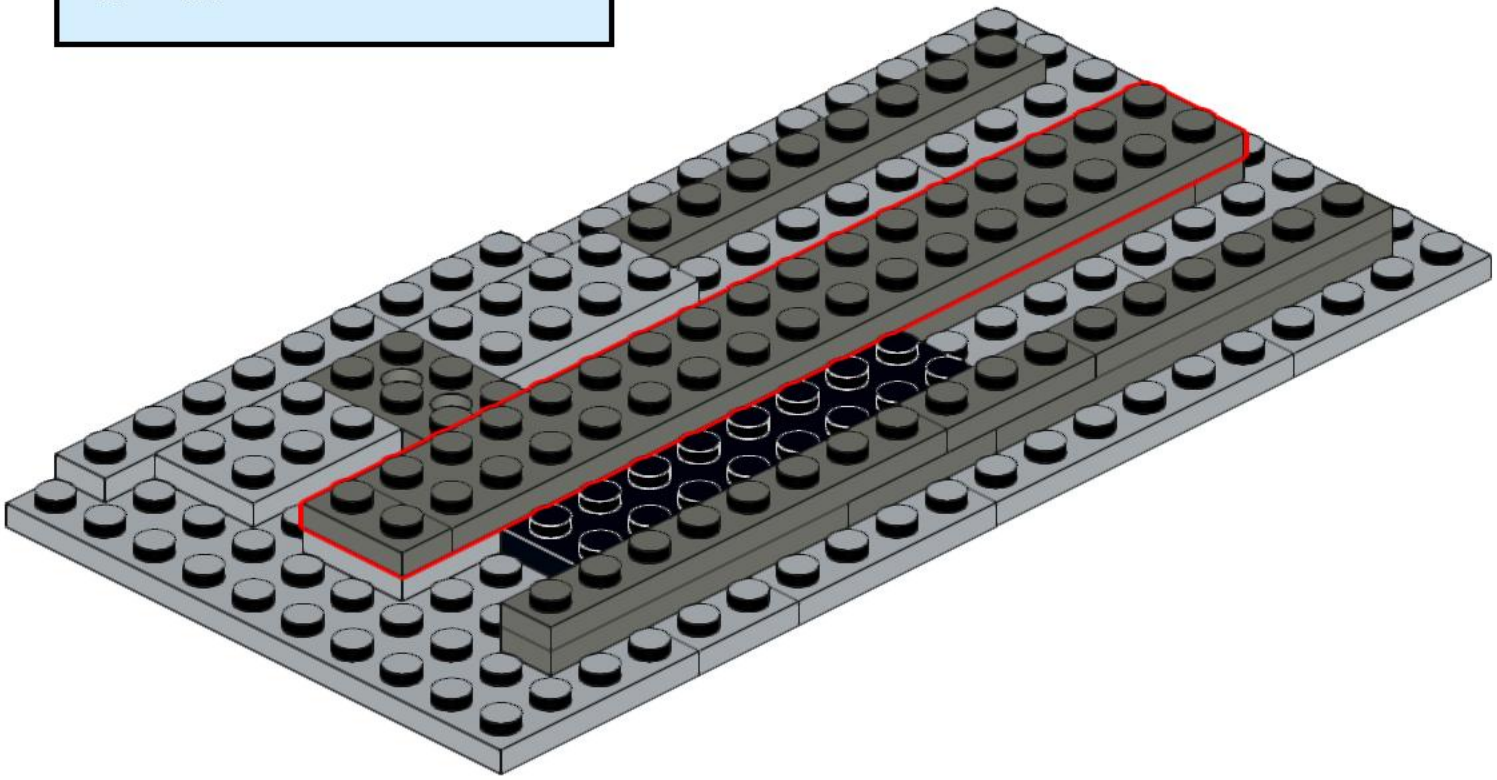

269

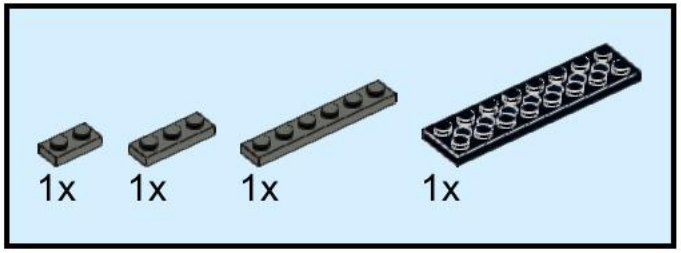

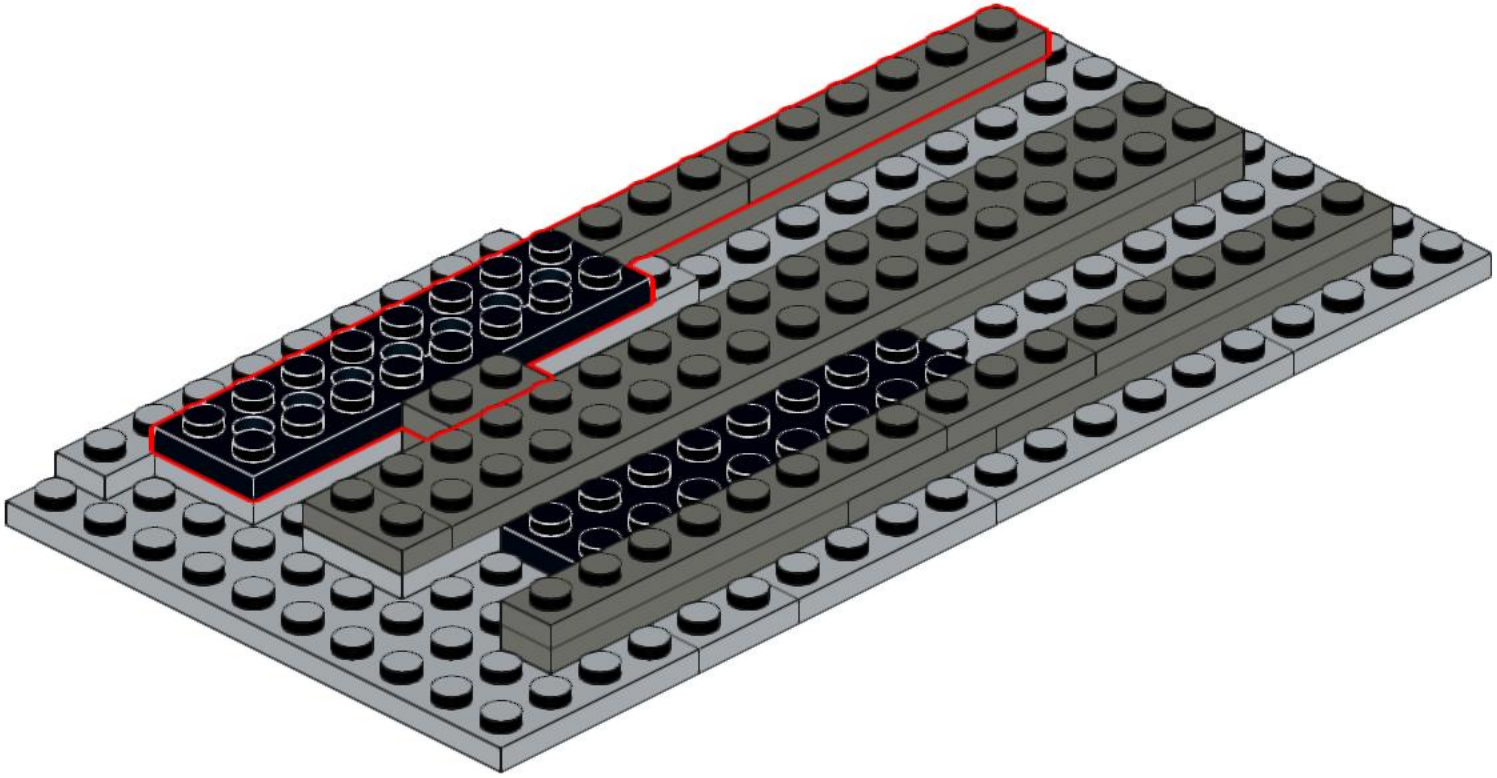

270

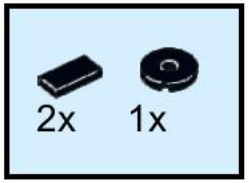

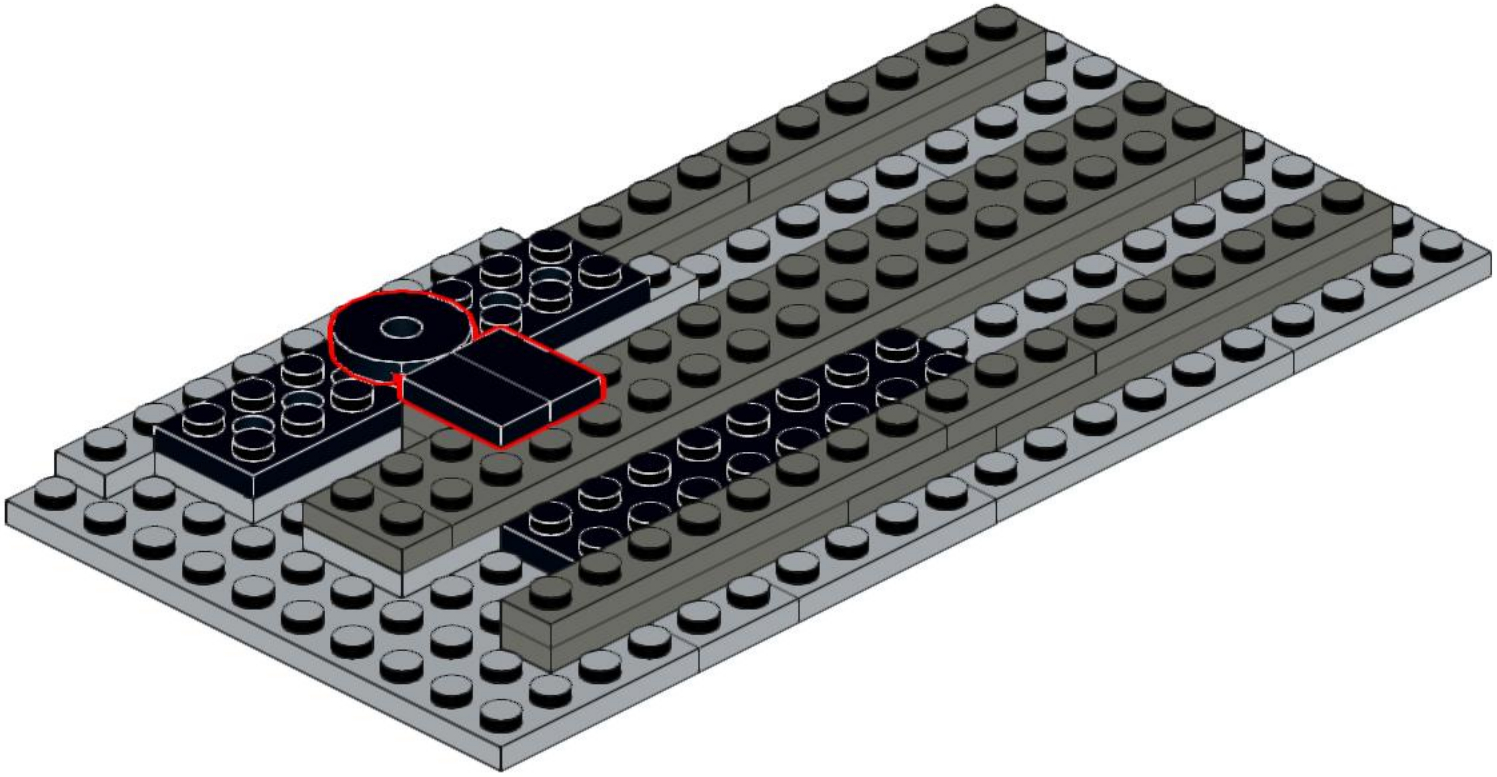

271

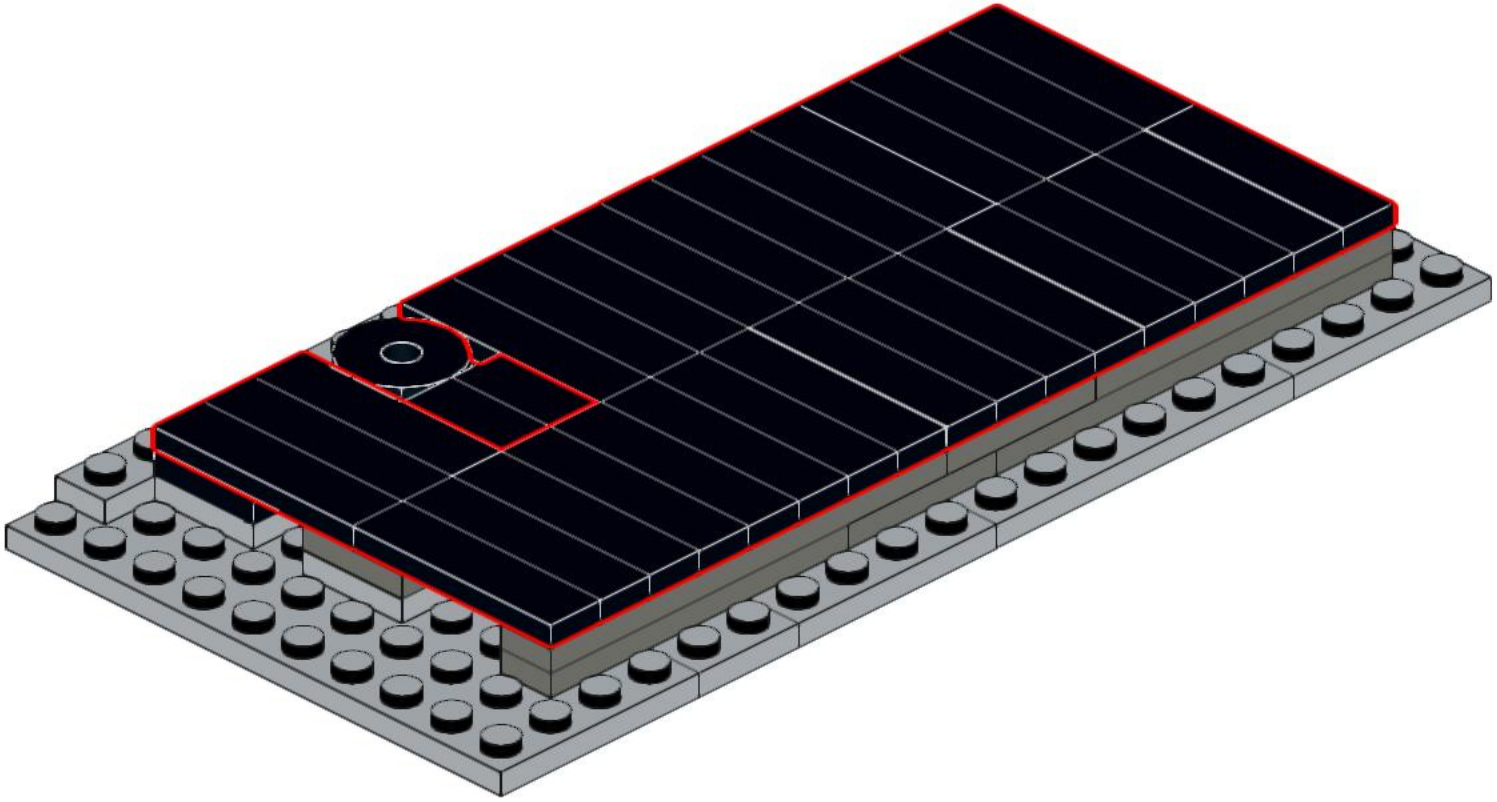

272

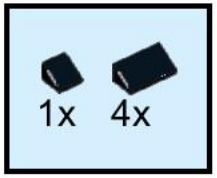

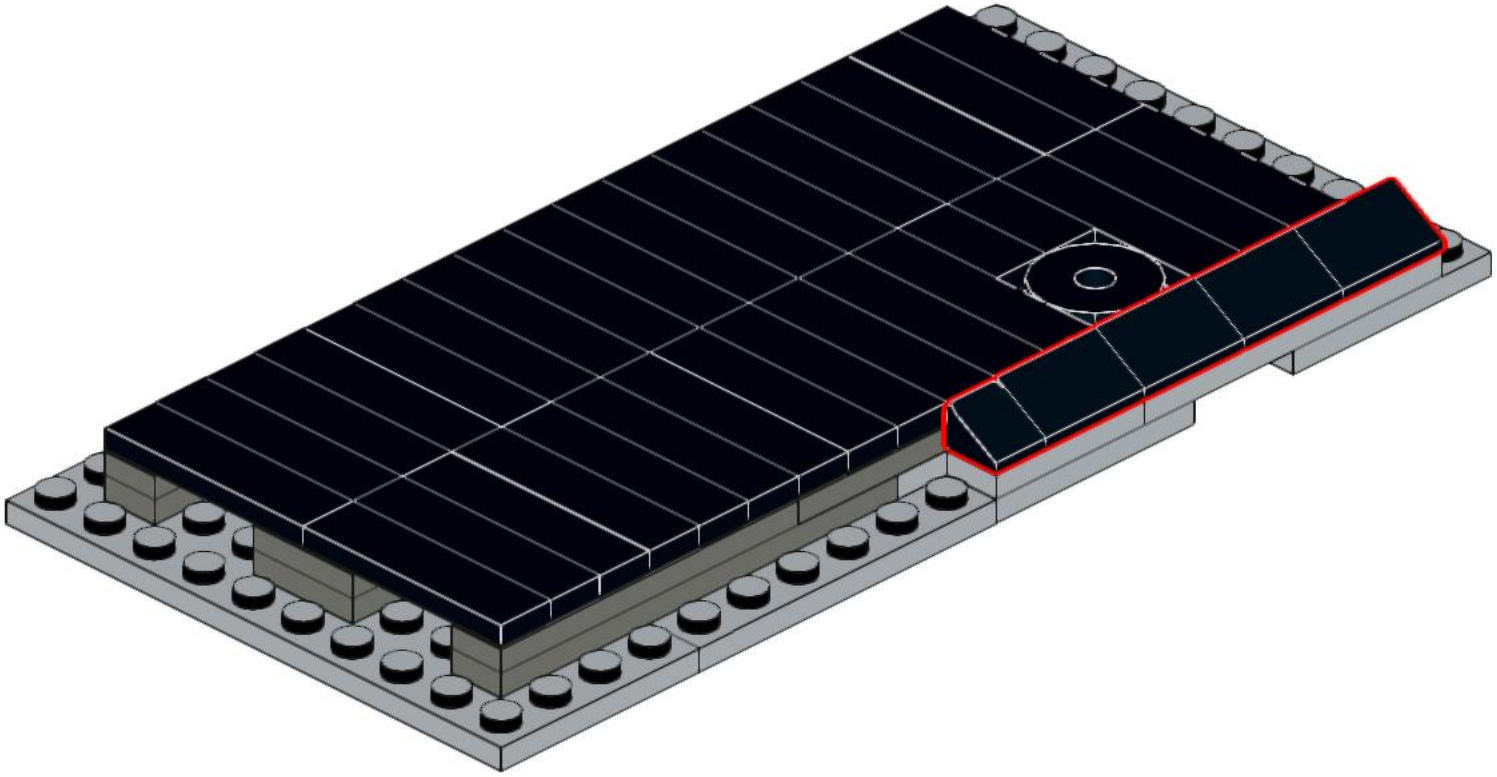

273

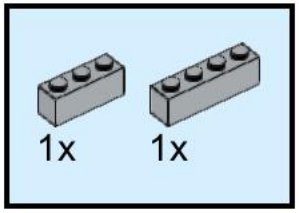

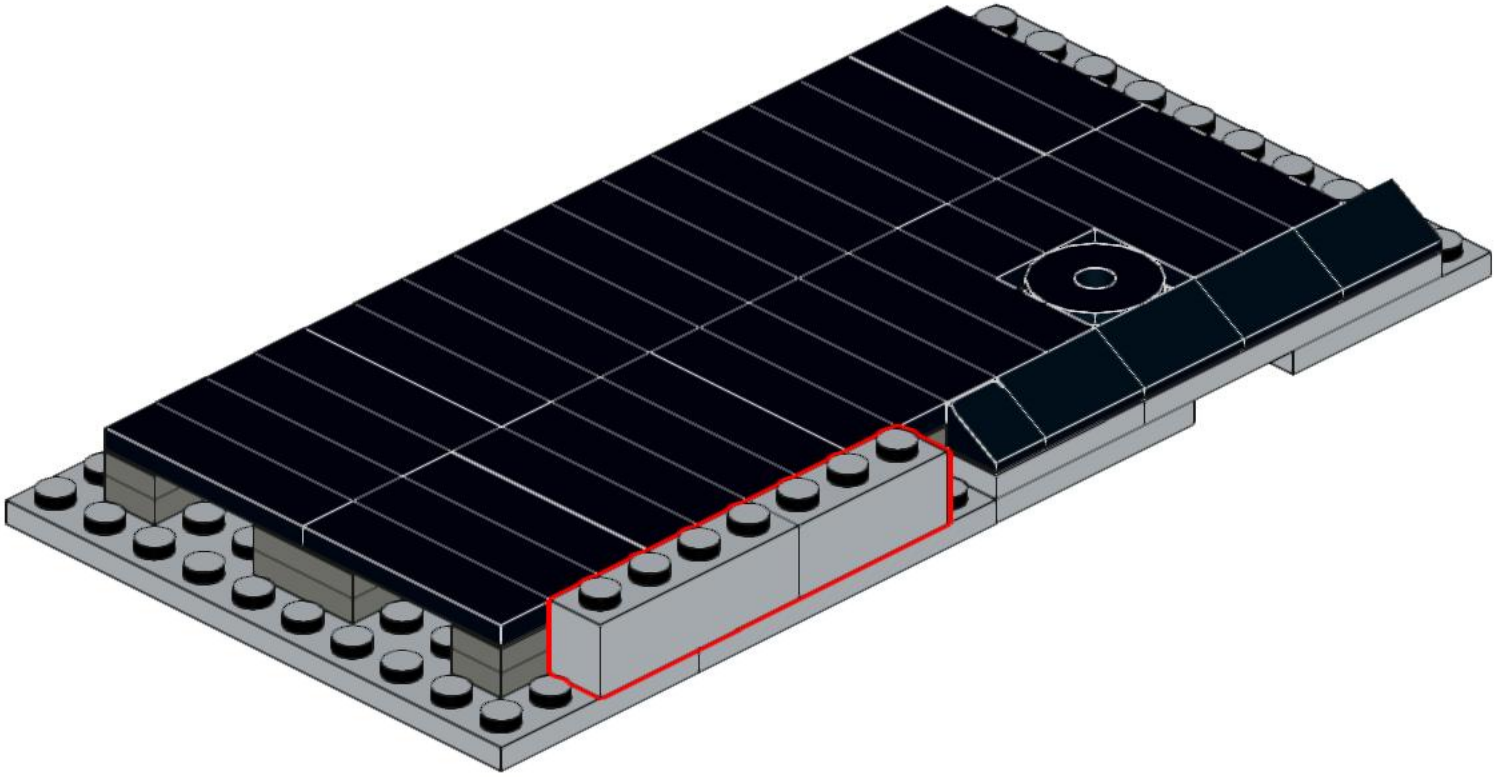

274

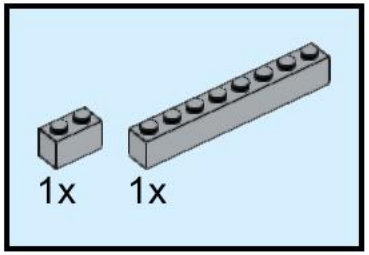

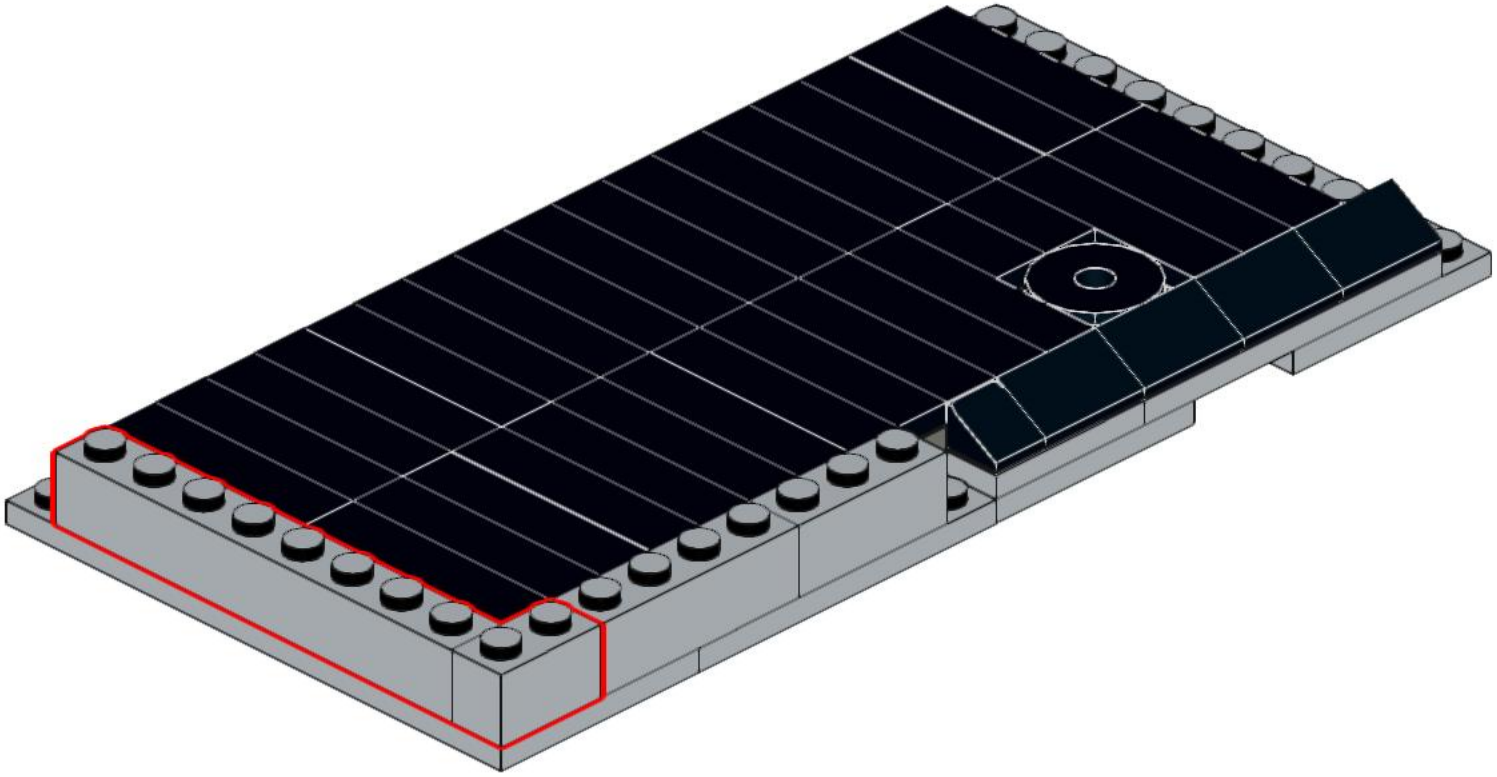

275

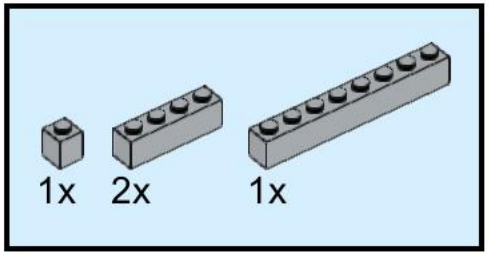

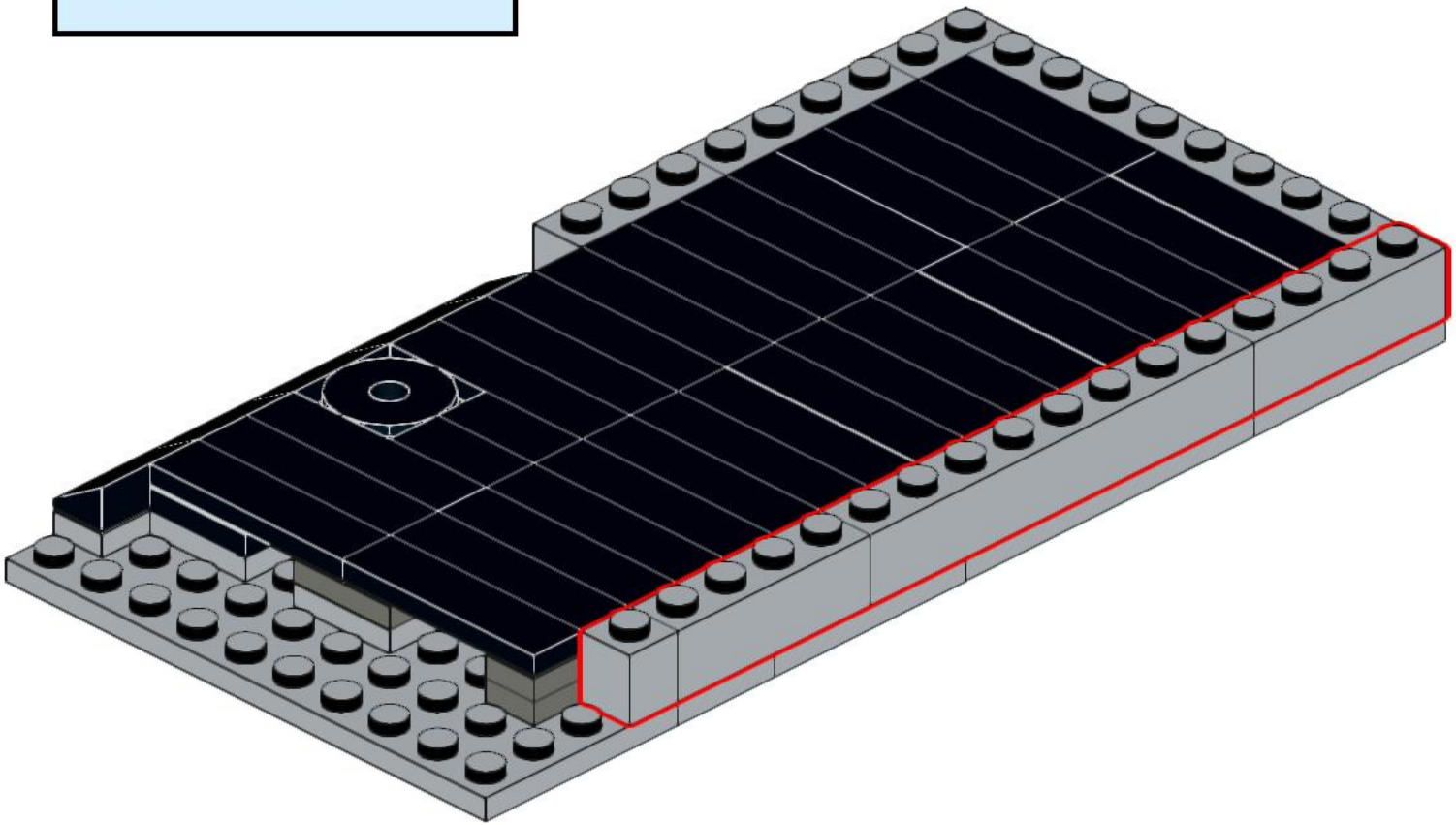

276

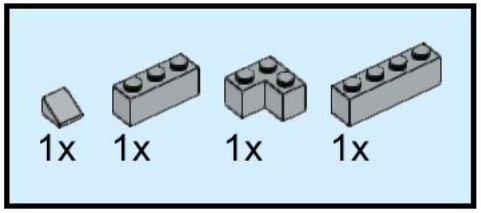

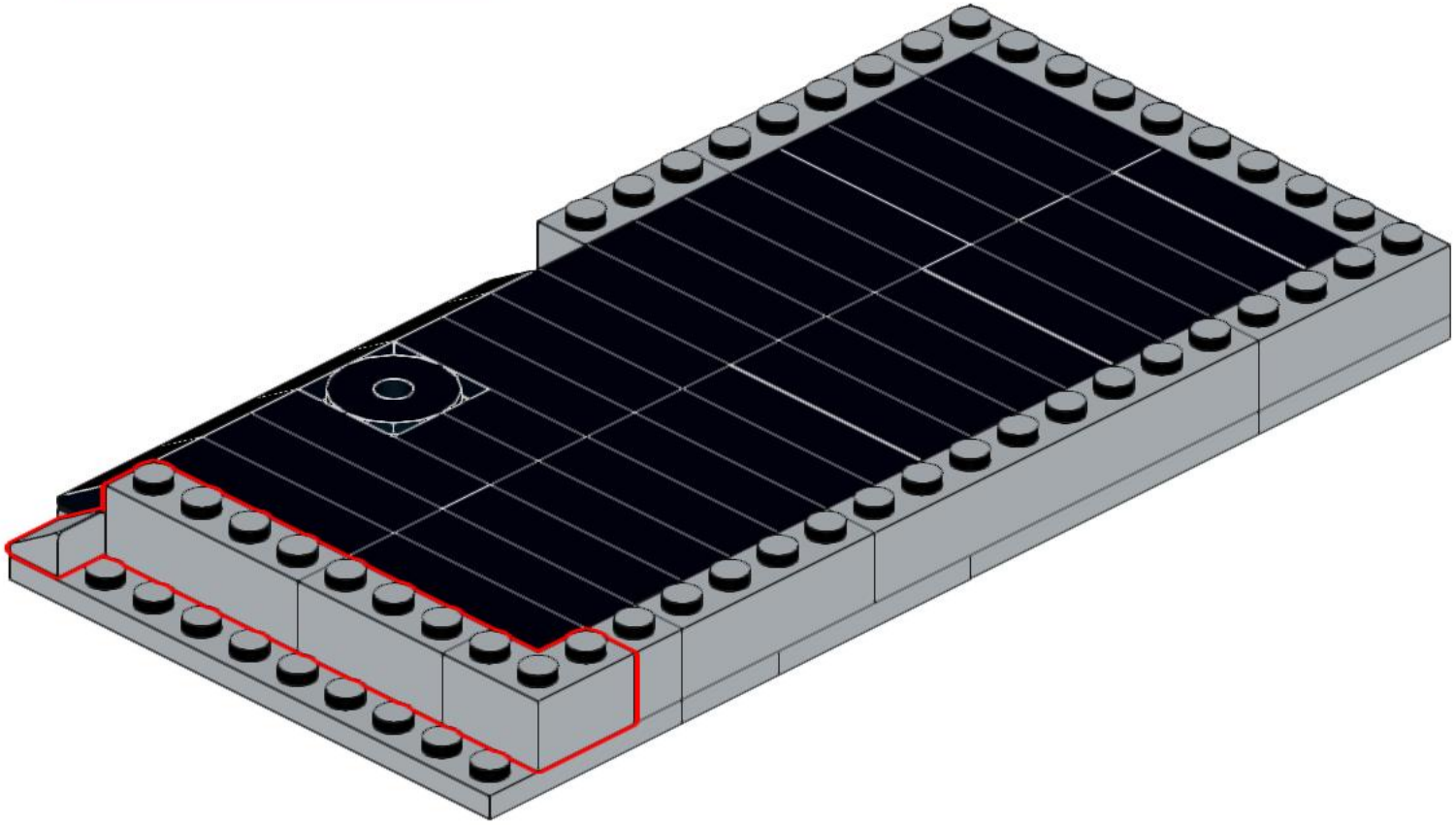

277

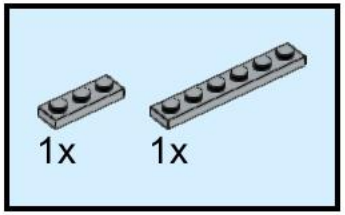

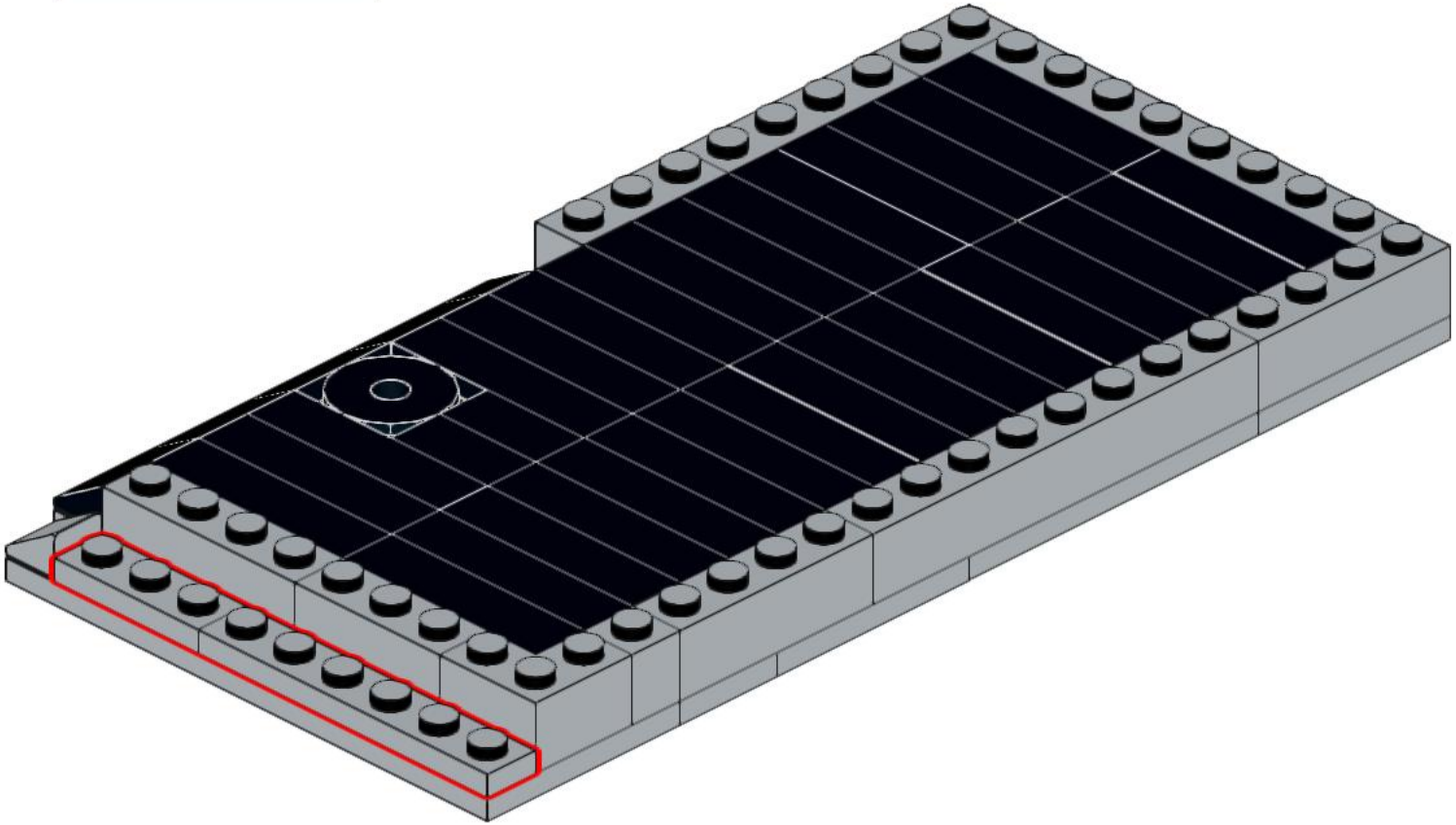

278

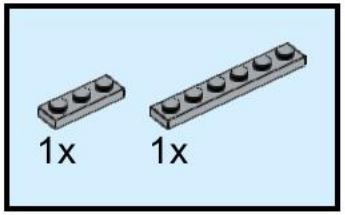

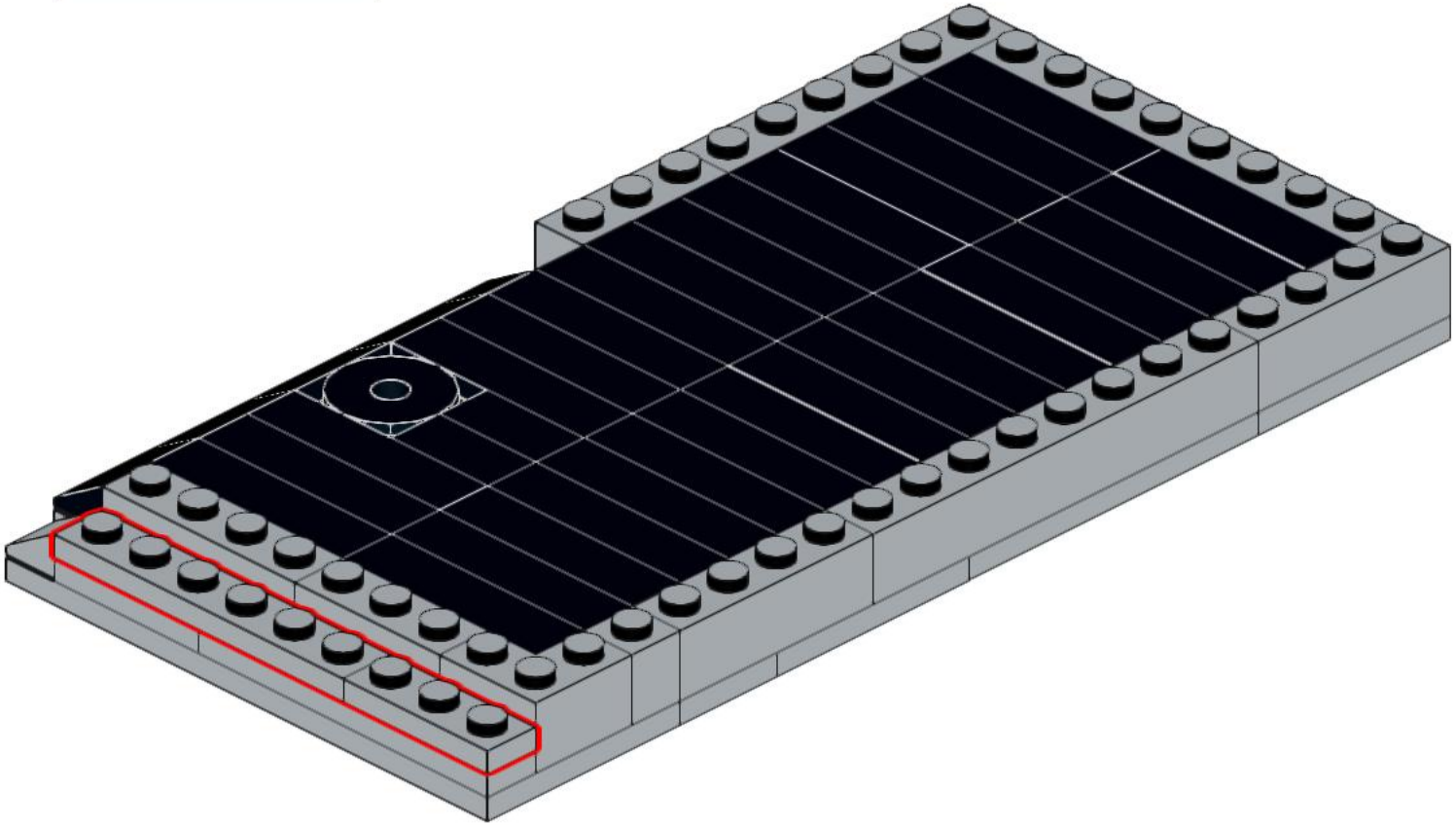

279

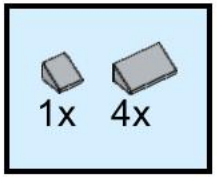

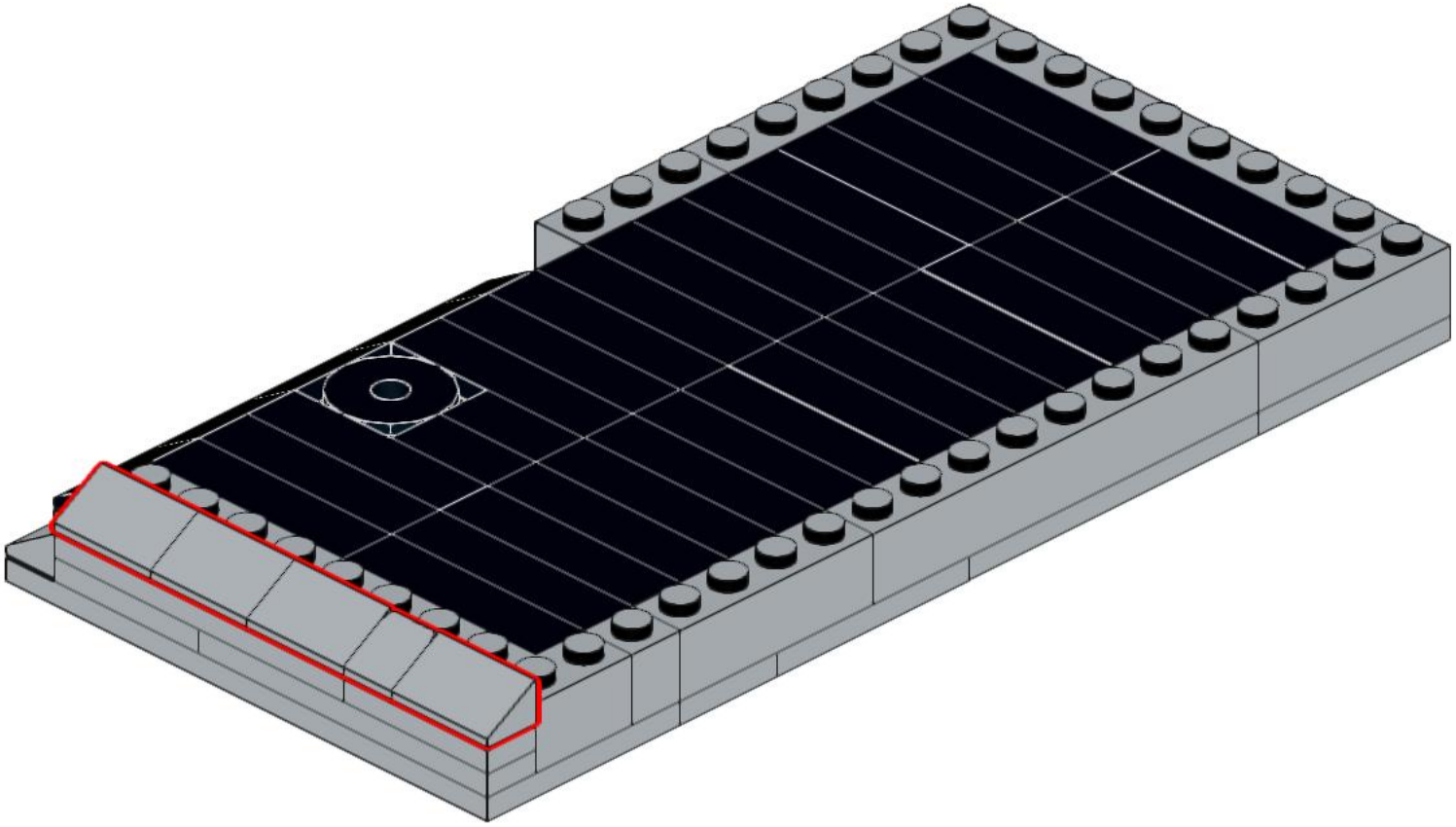

280

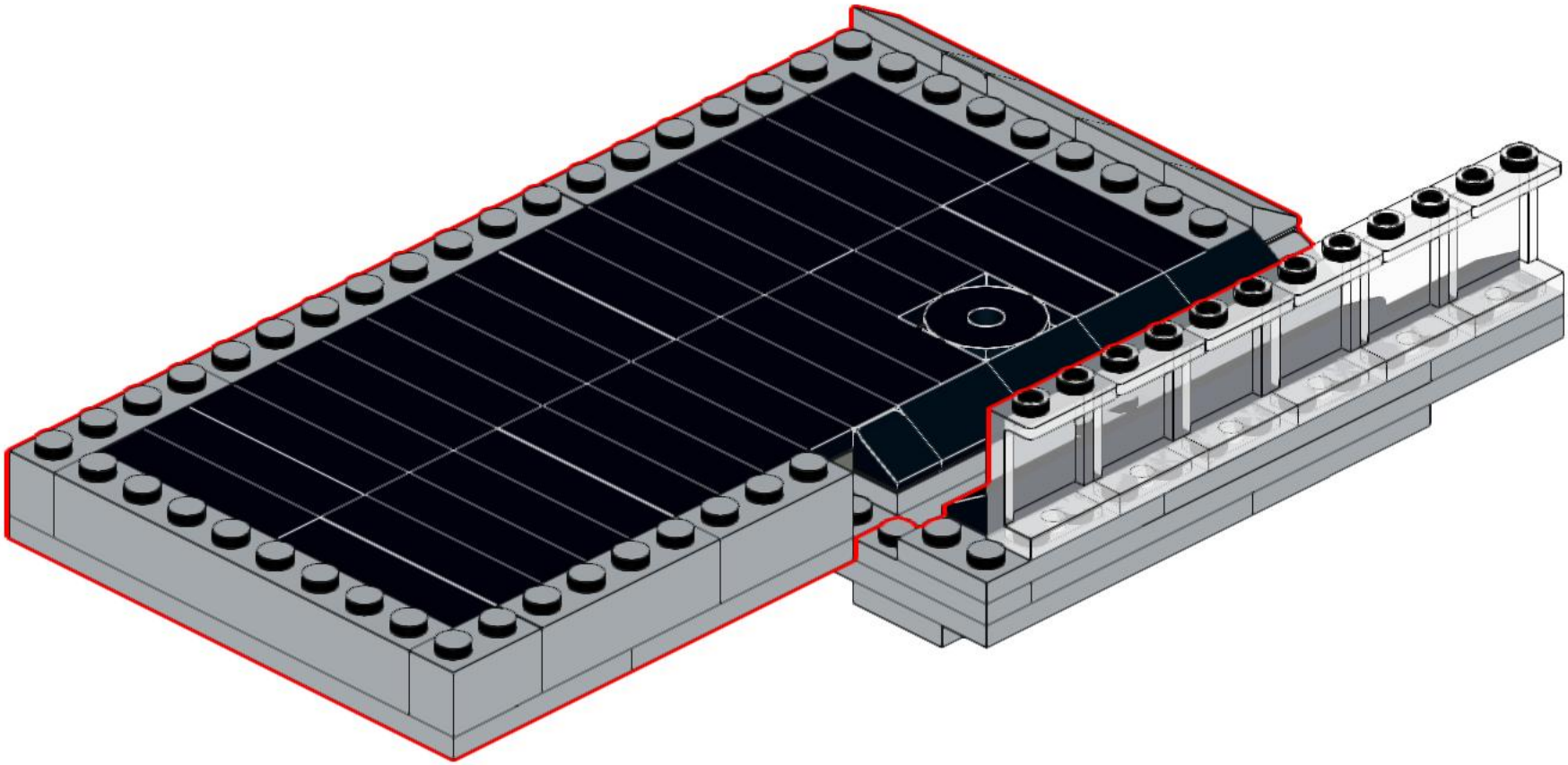

281

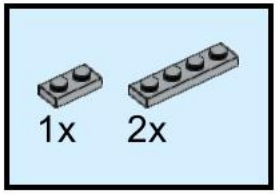

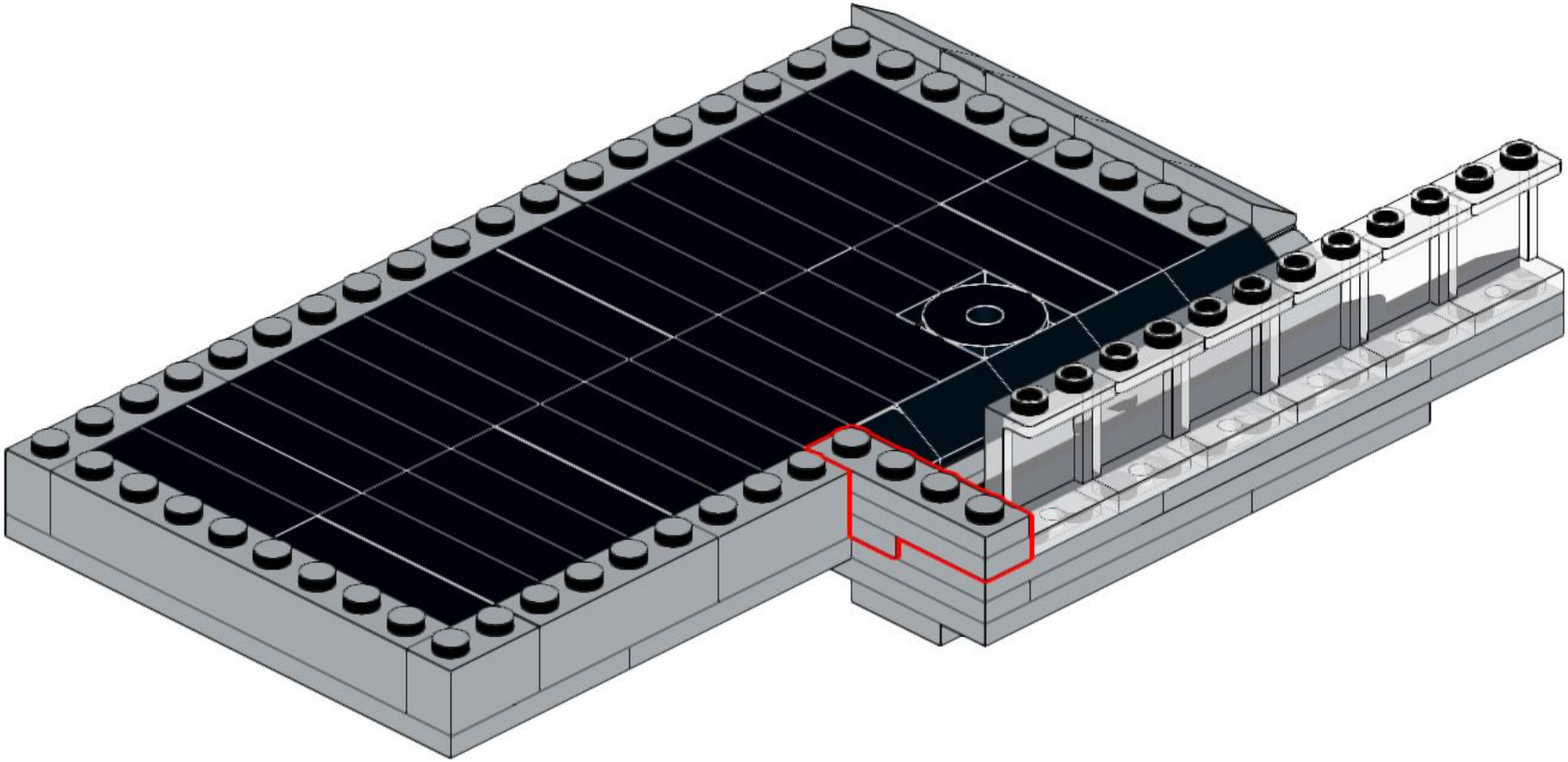

282

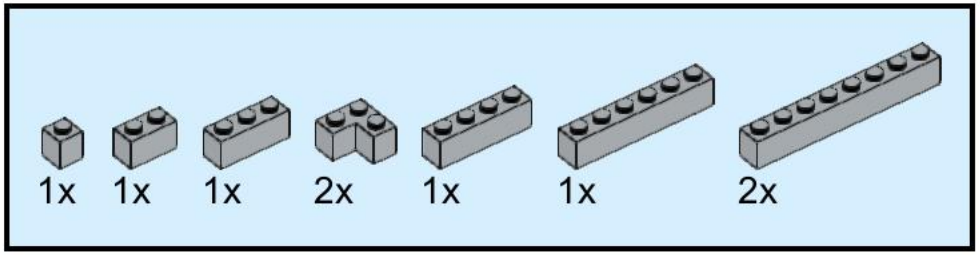

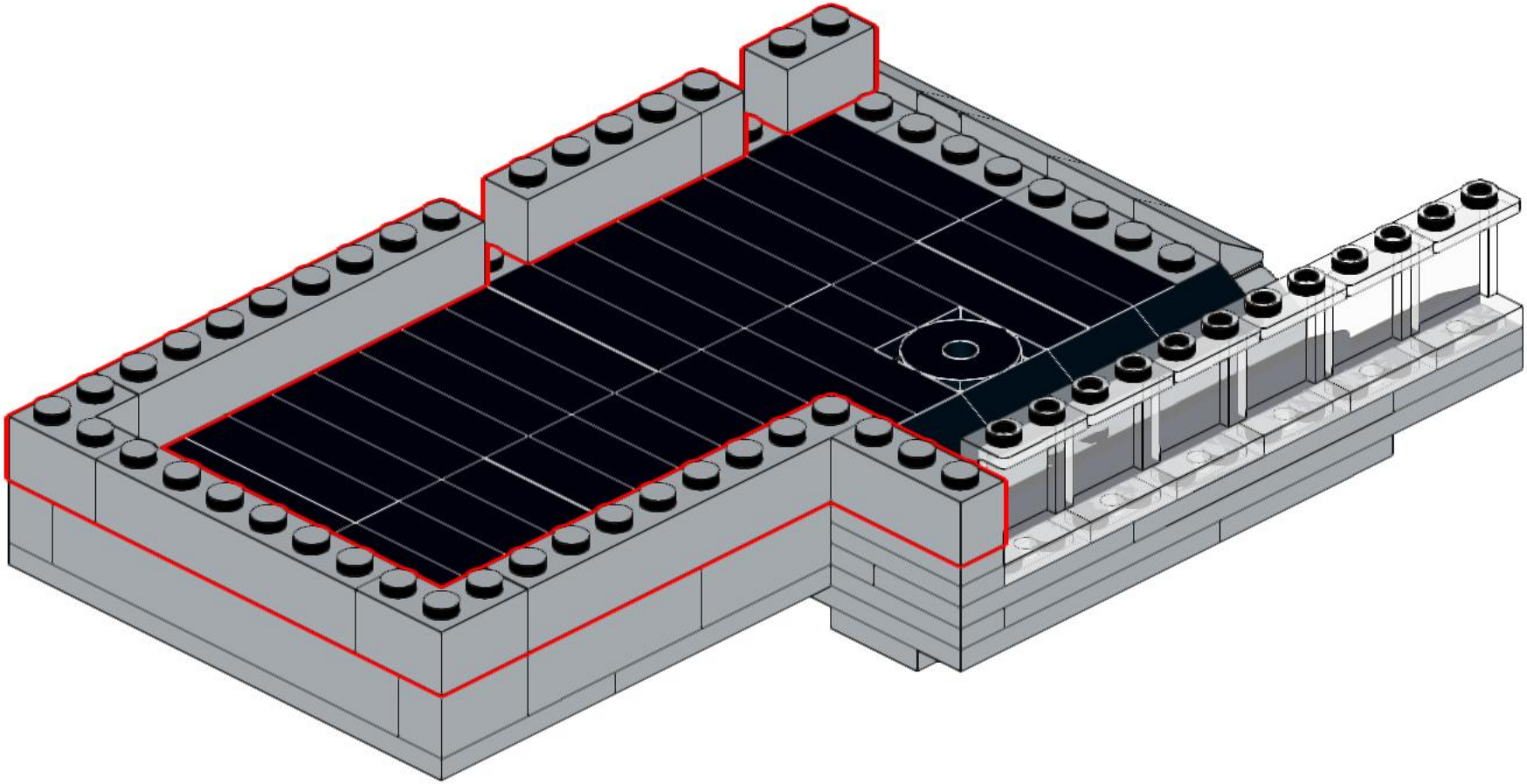

283

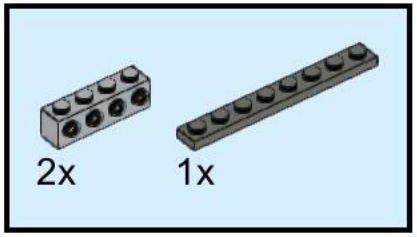

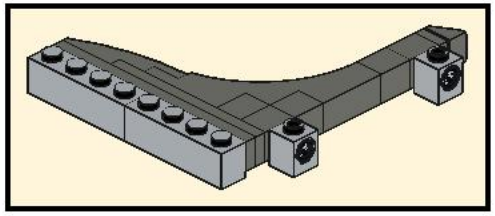

284

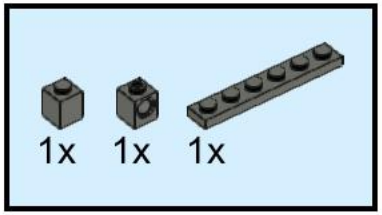

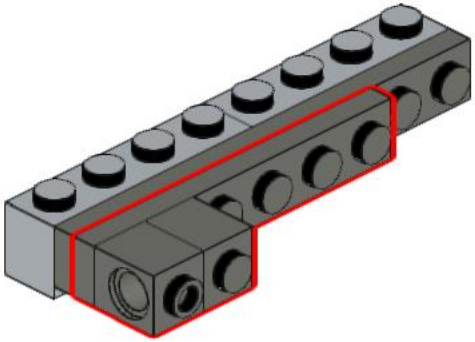

285

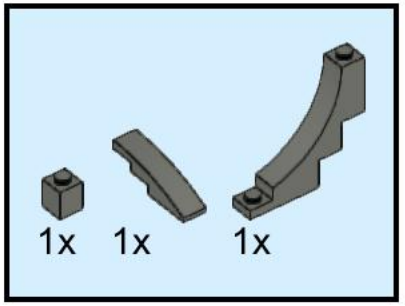

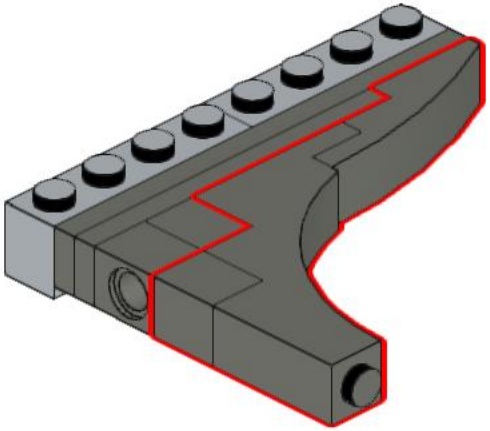

286

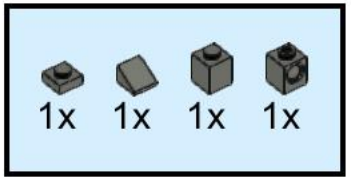

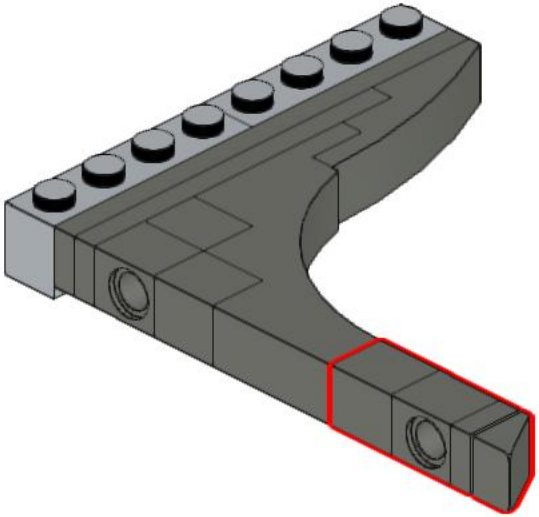

287

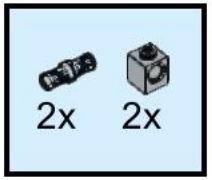

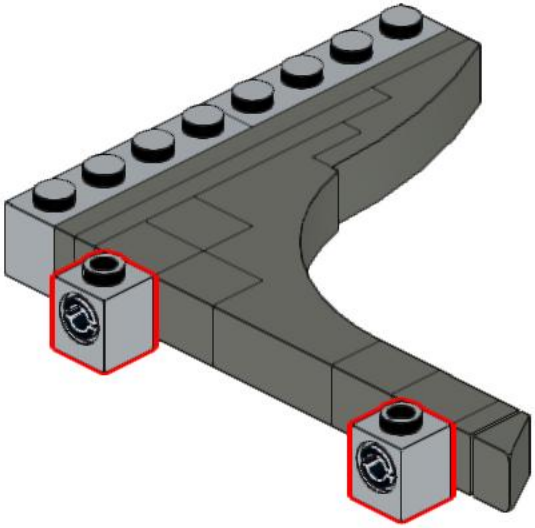

288

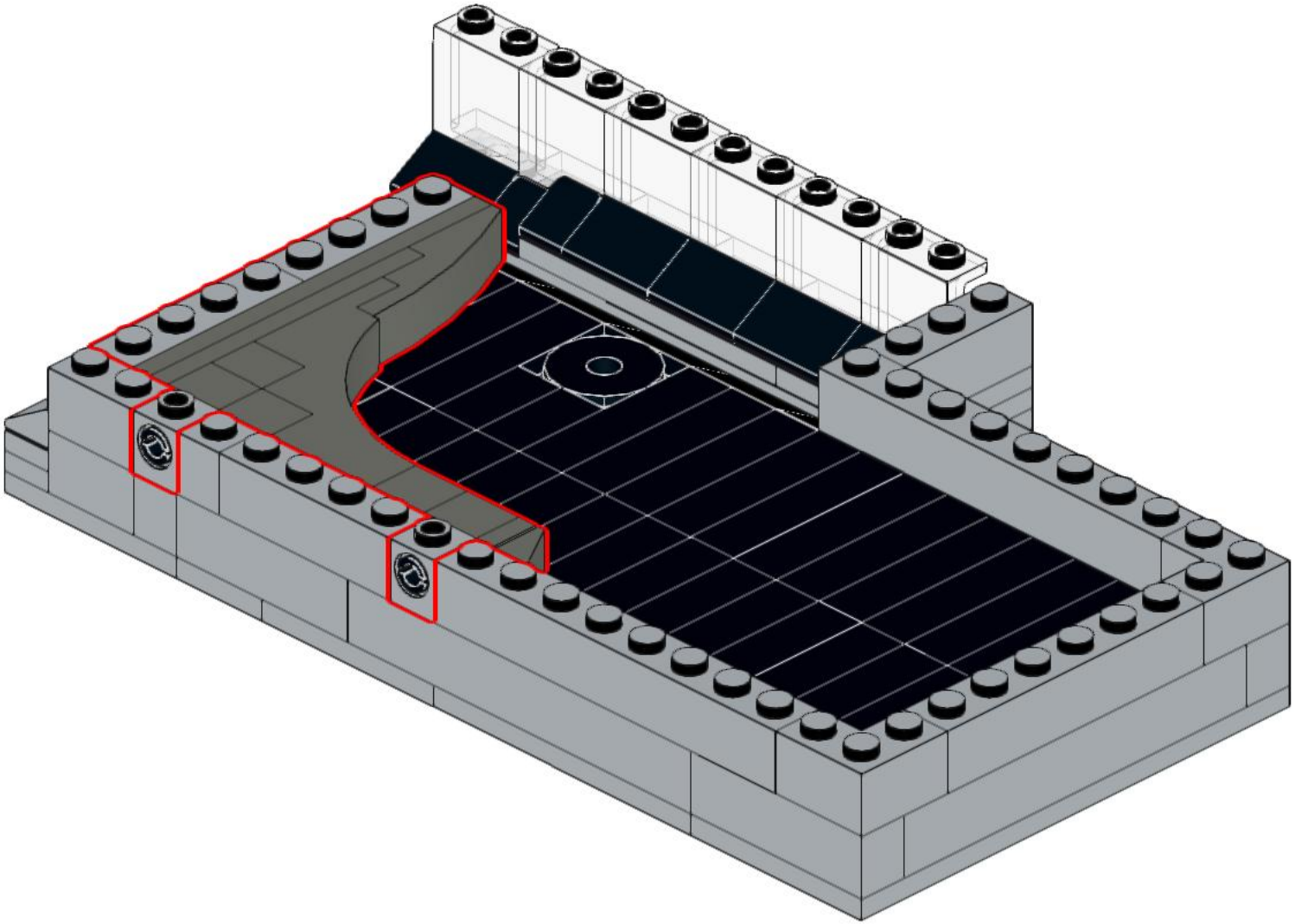

289

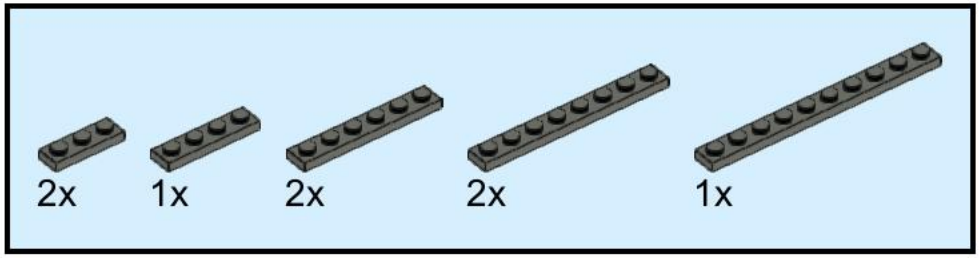

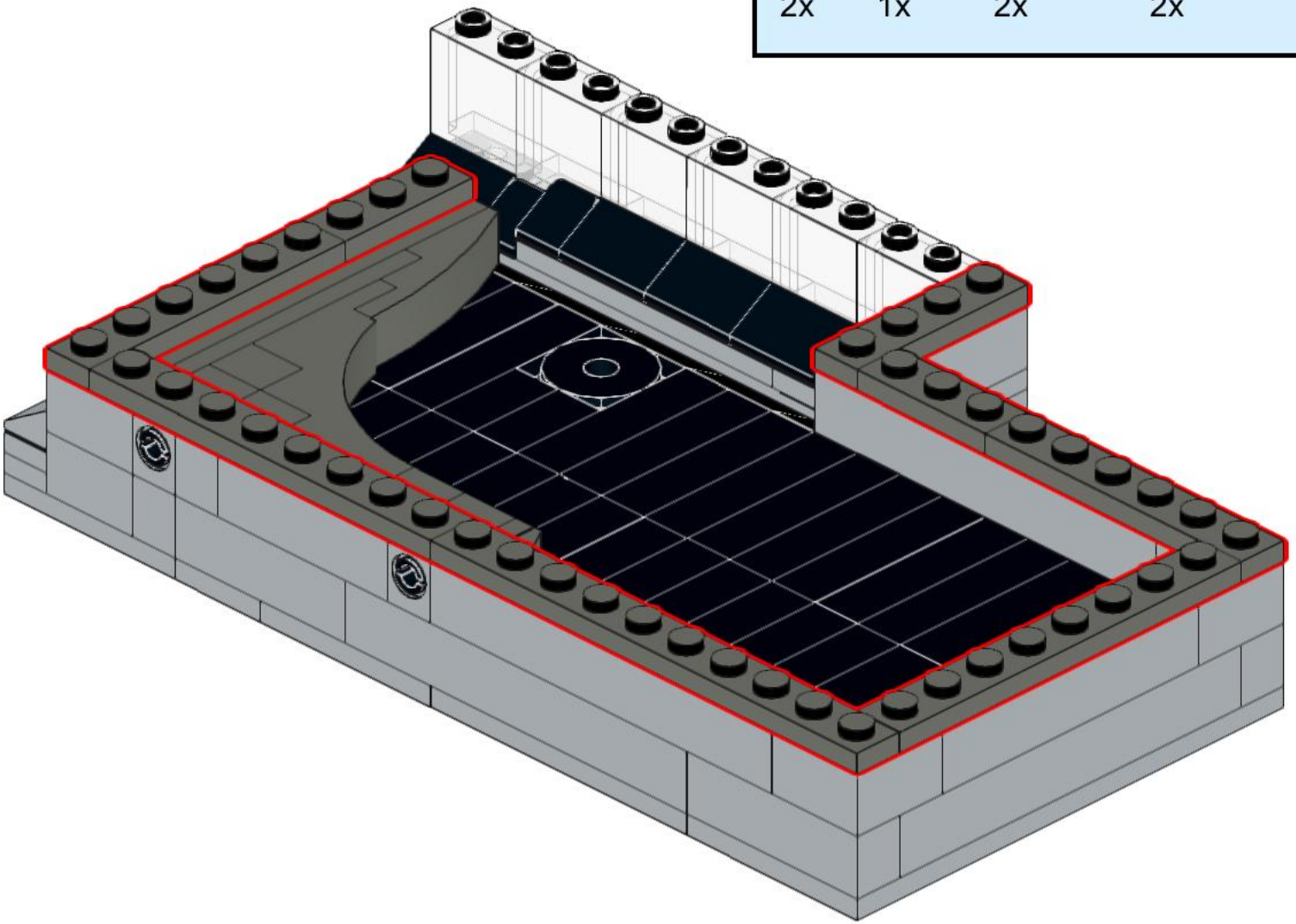

290

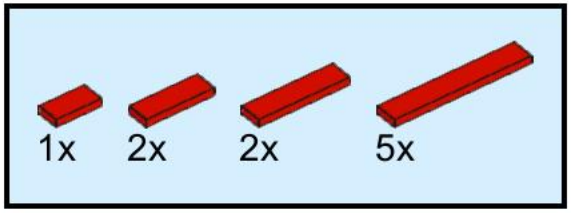

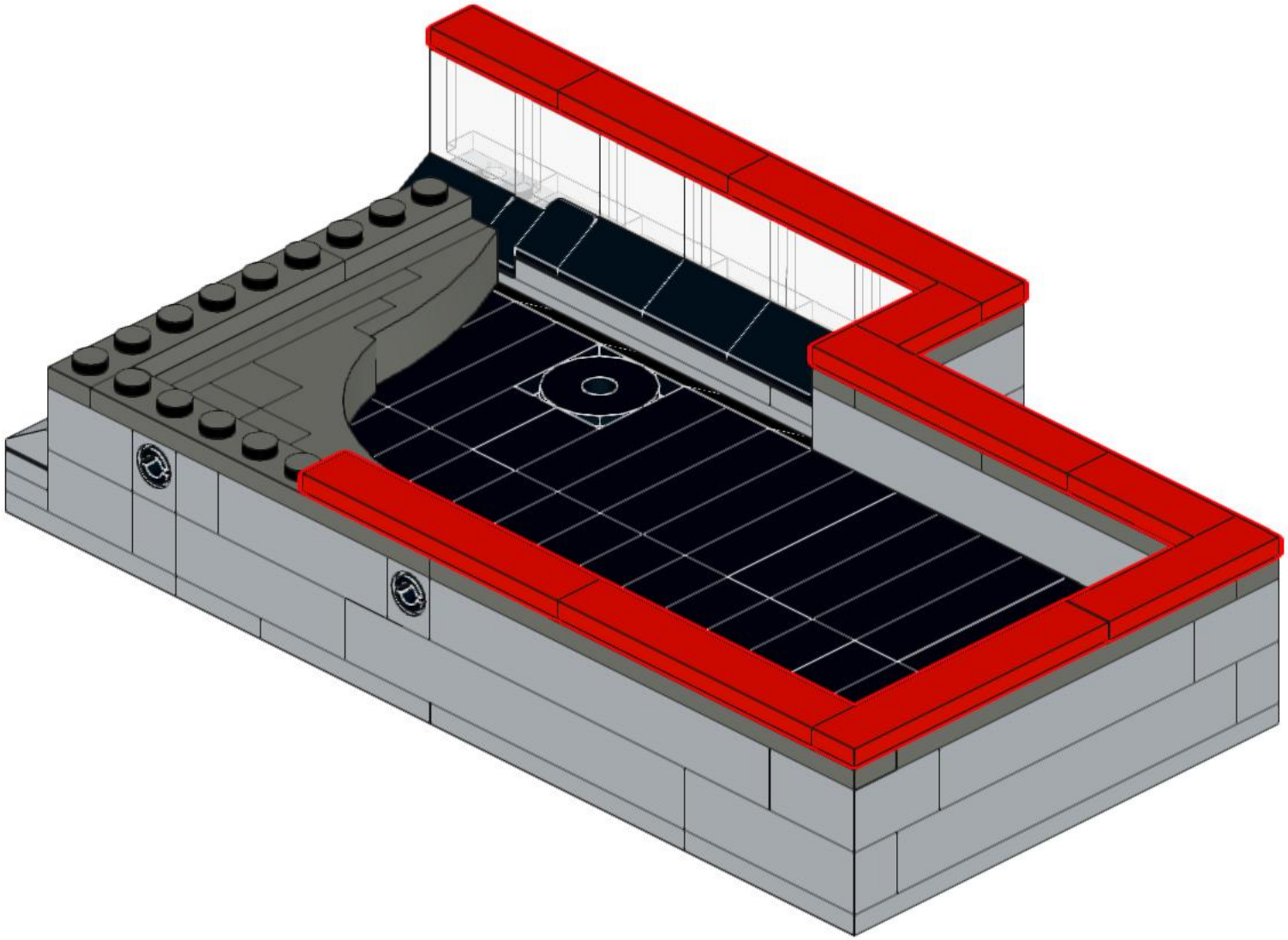

291

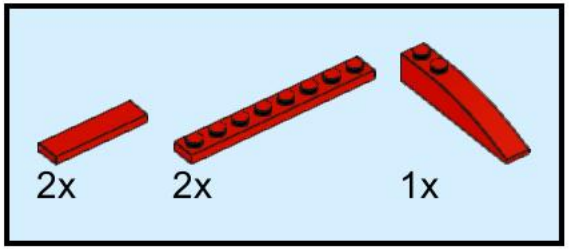

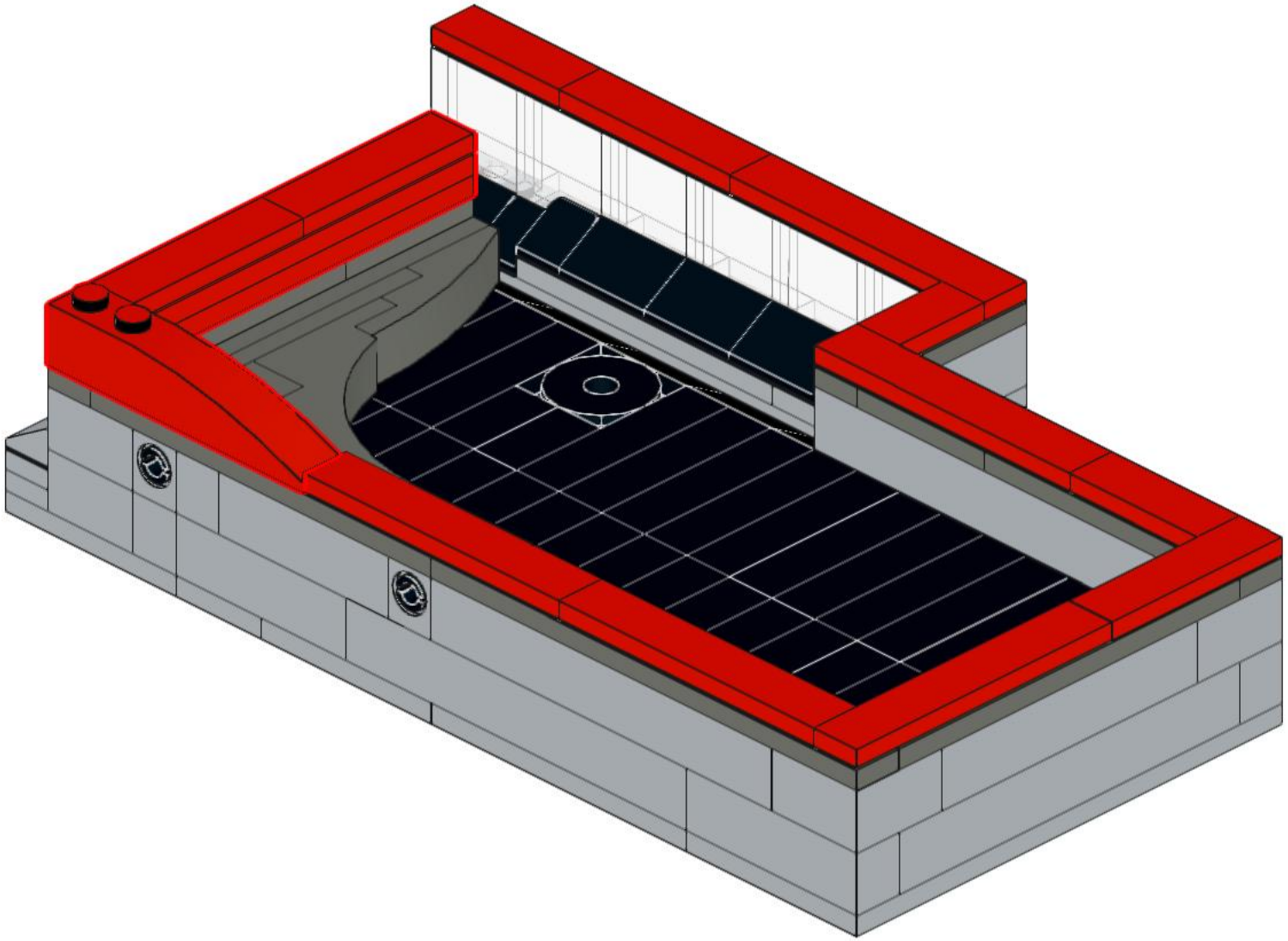

292

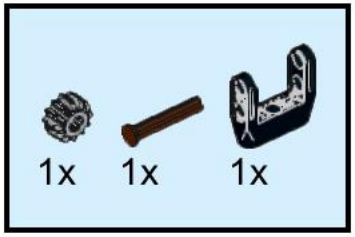

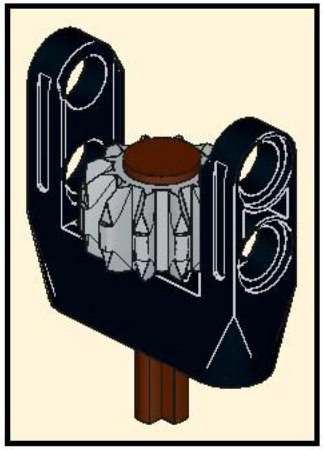

293

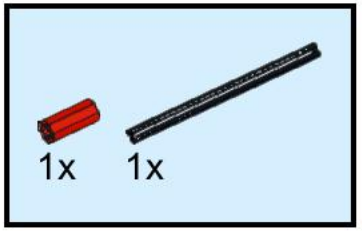

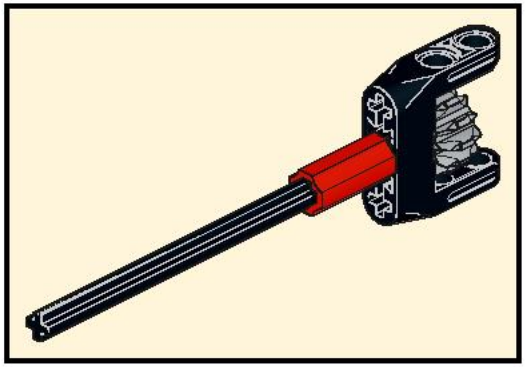

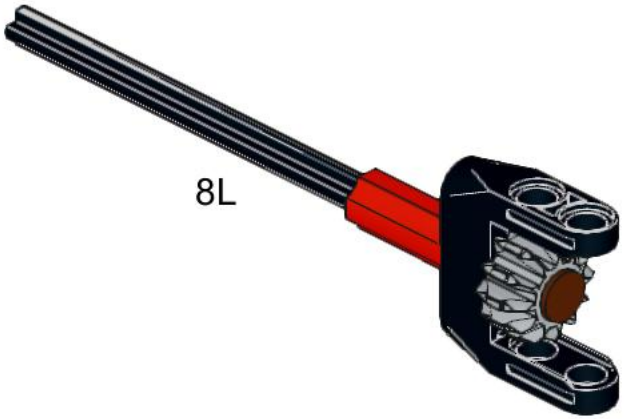

294

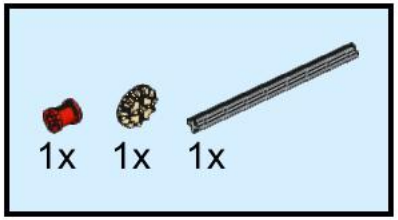

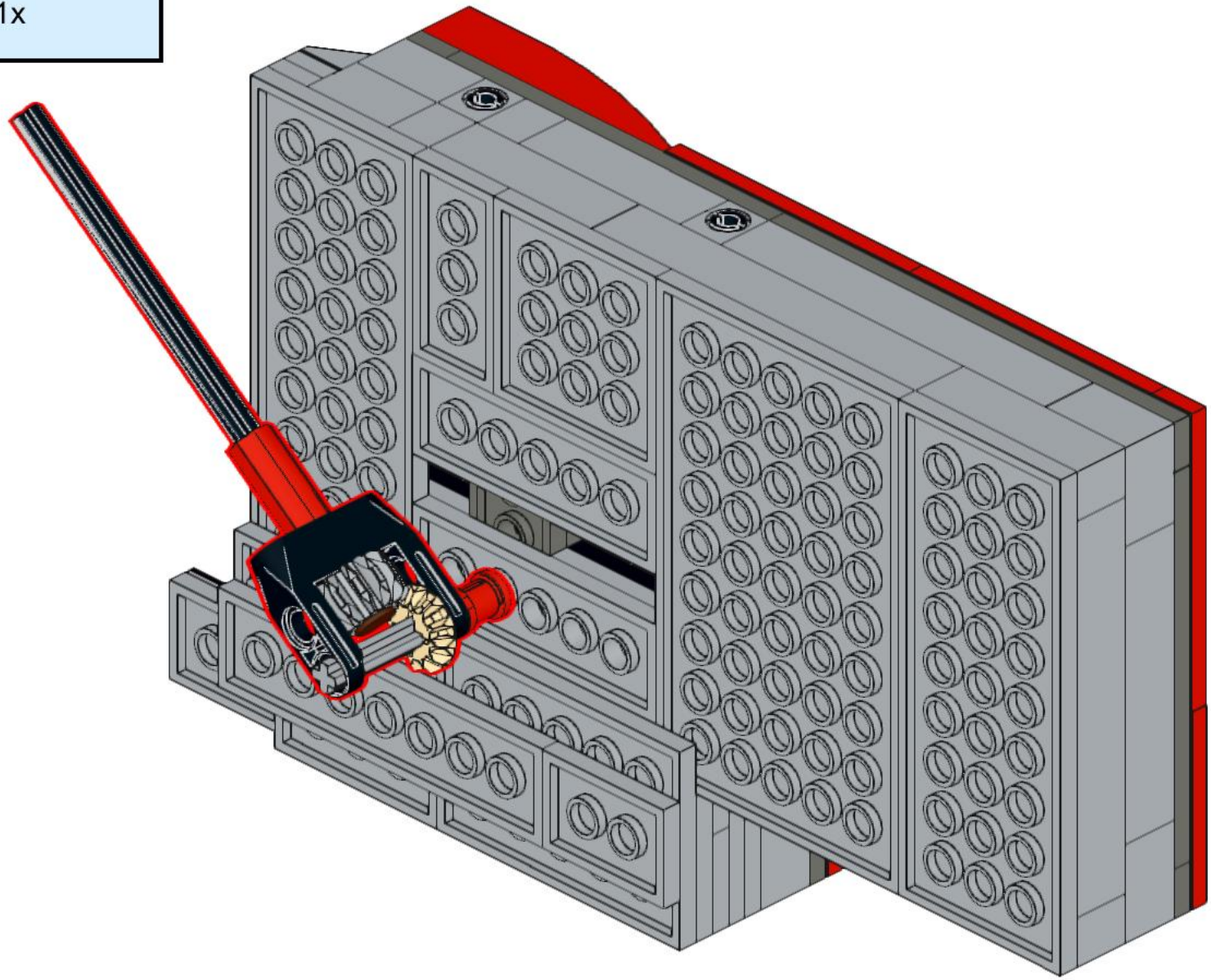

295

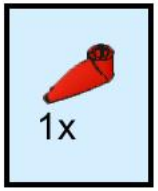

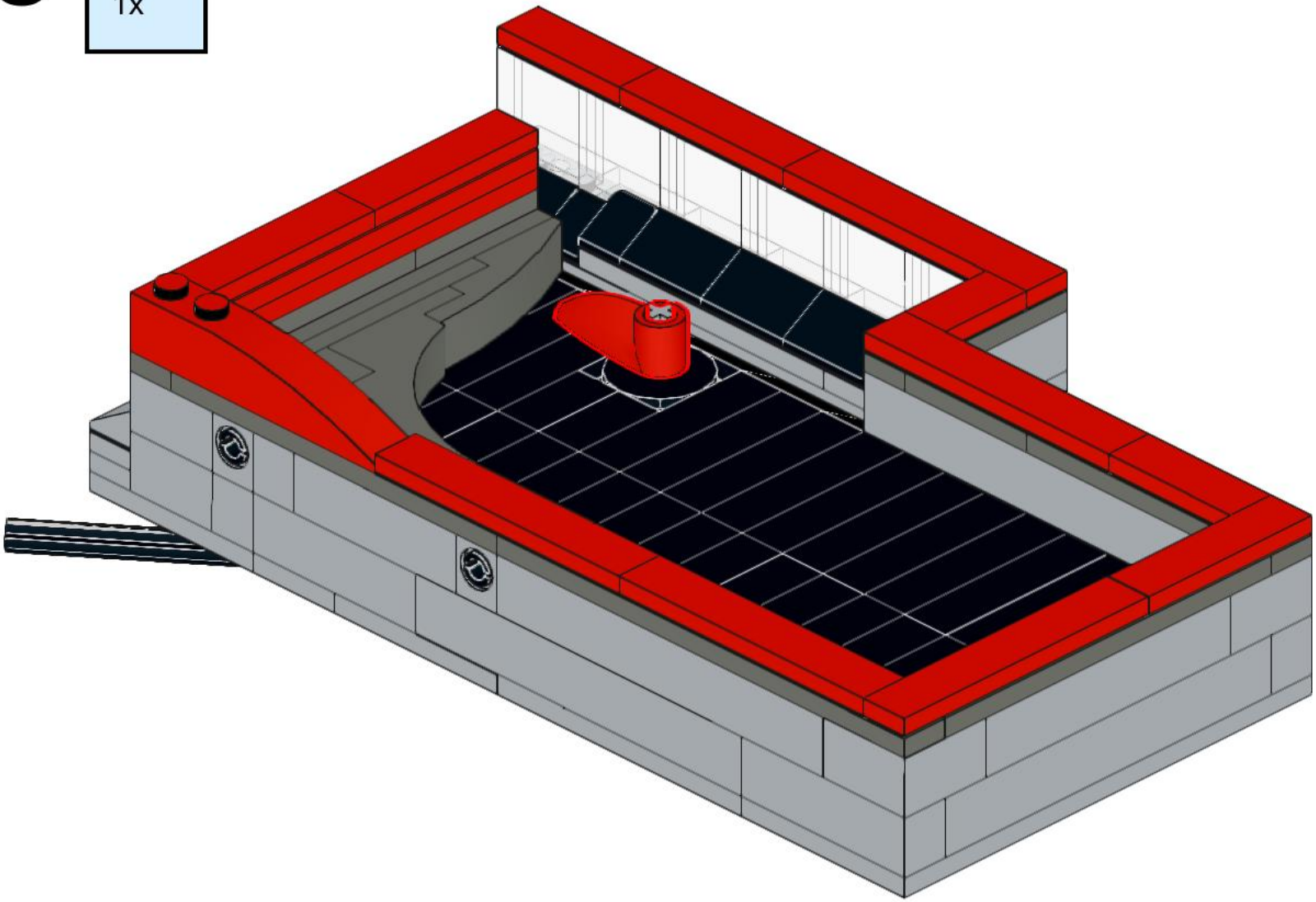

296

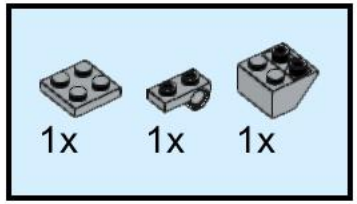

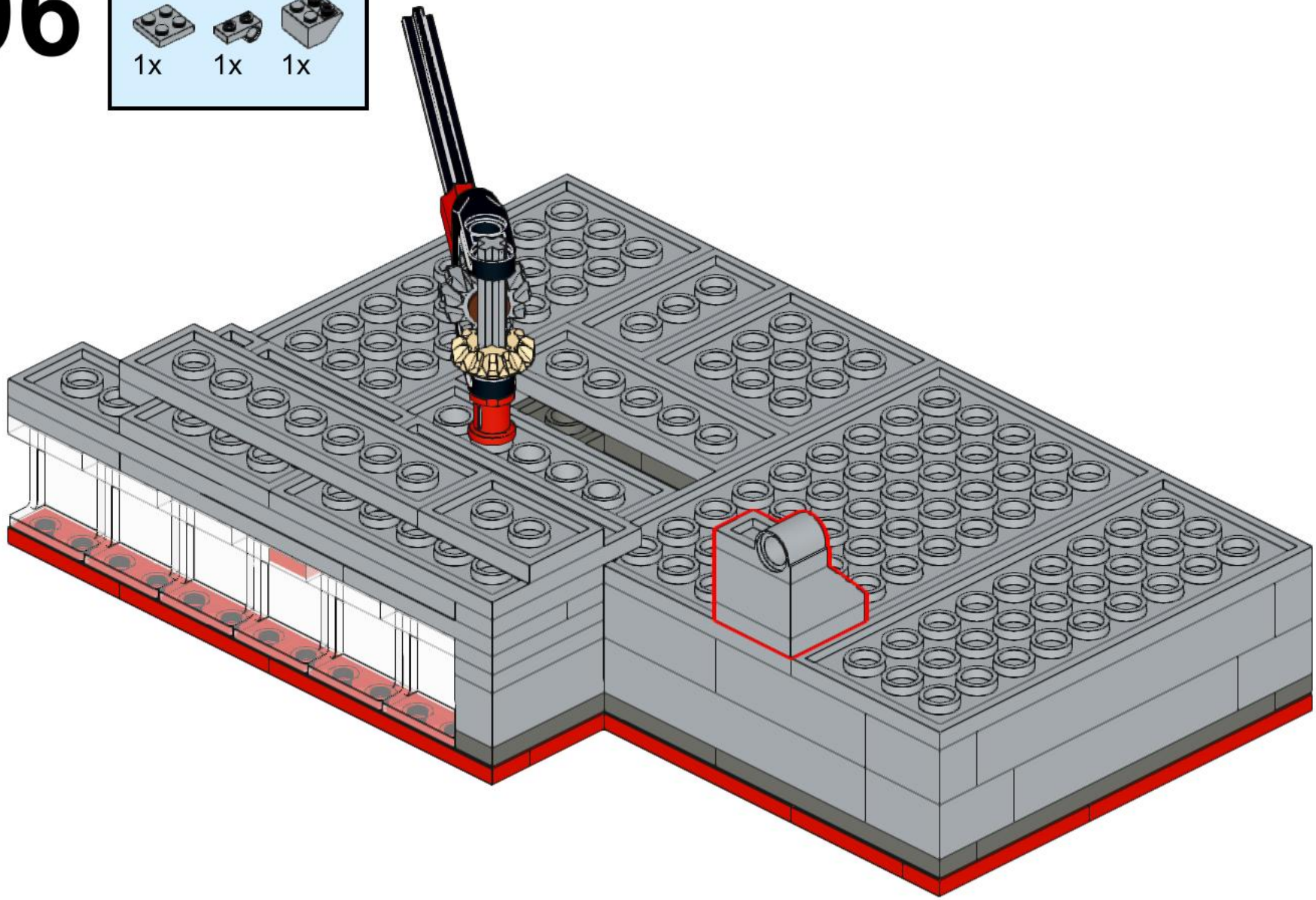

297

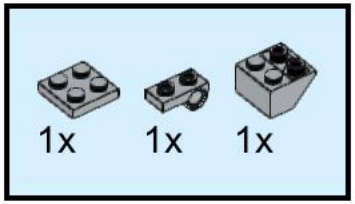

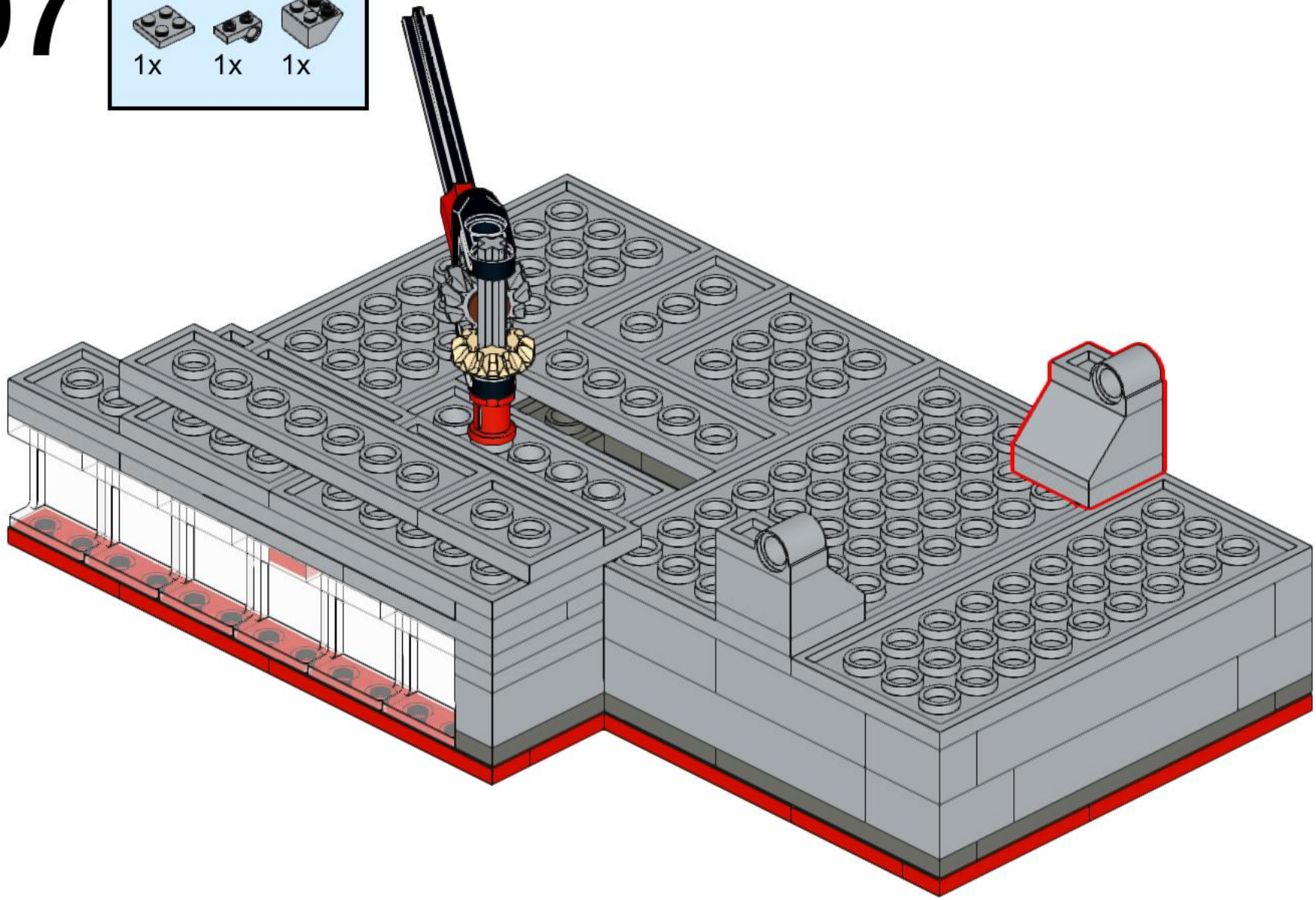

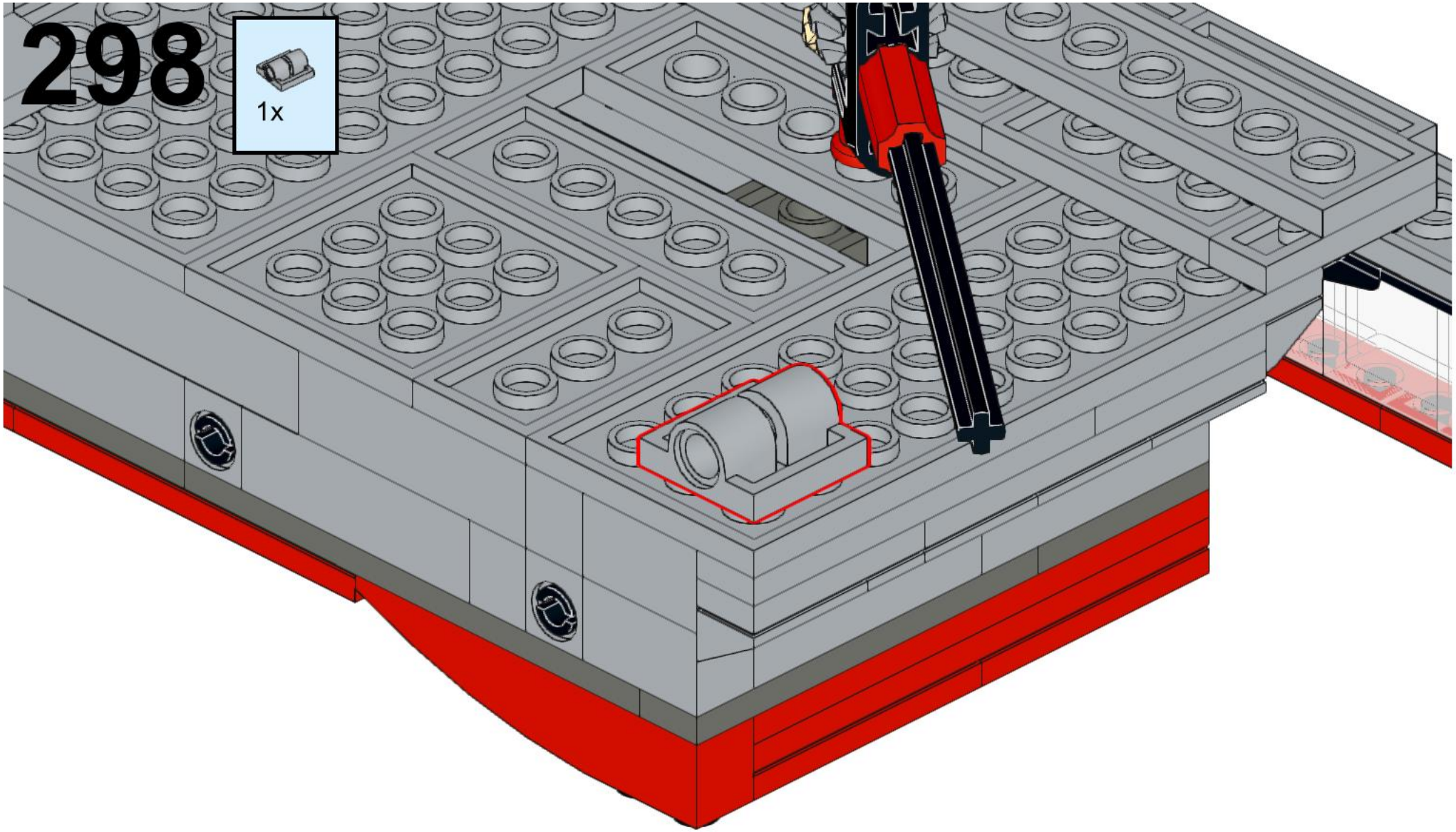
298
1x

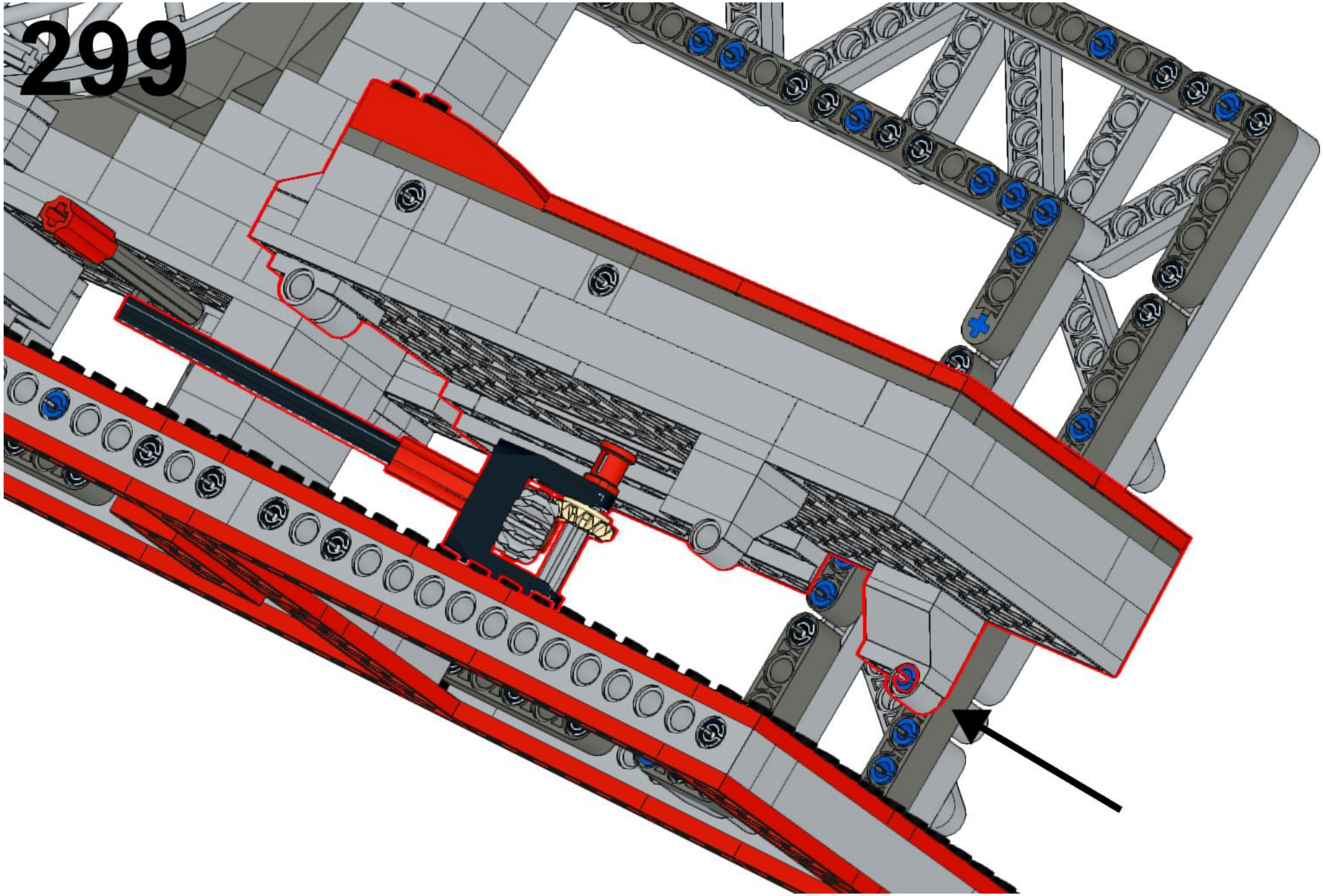

300

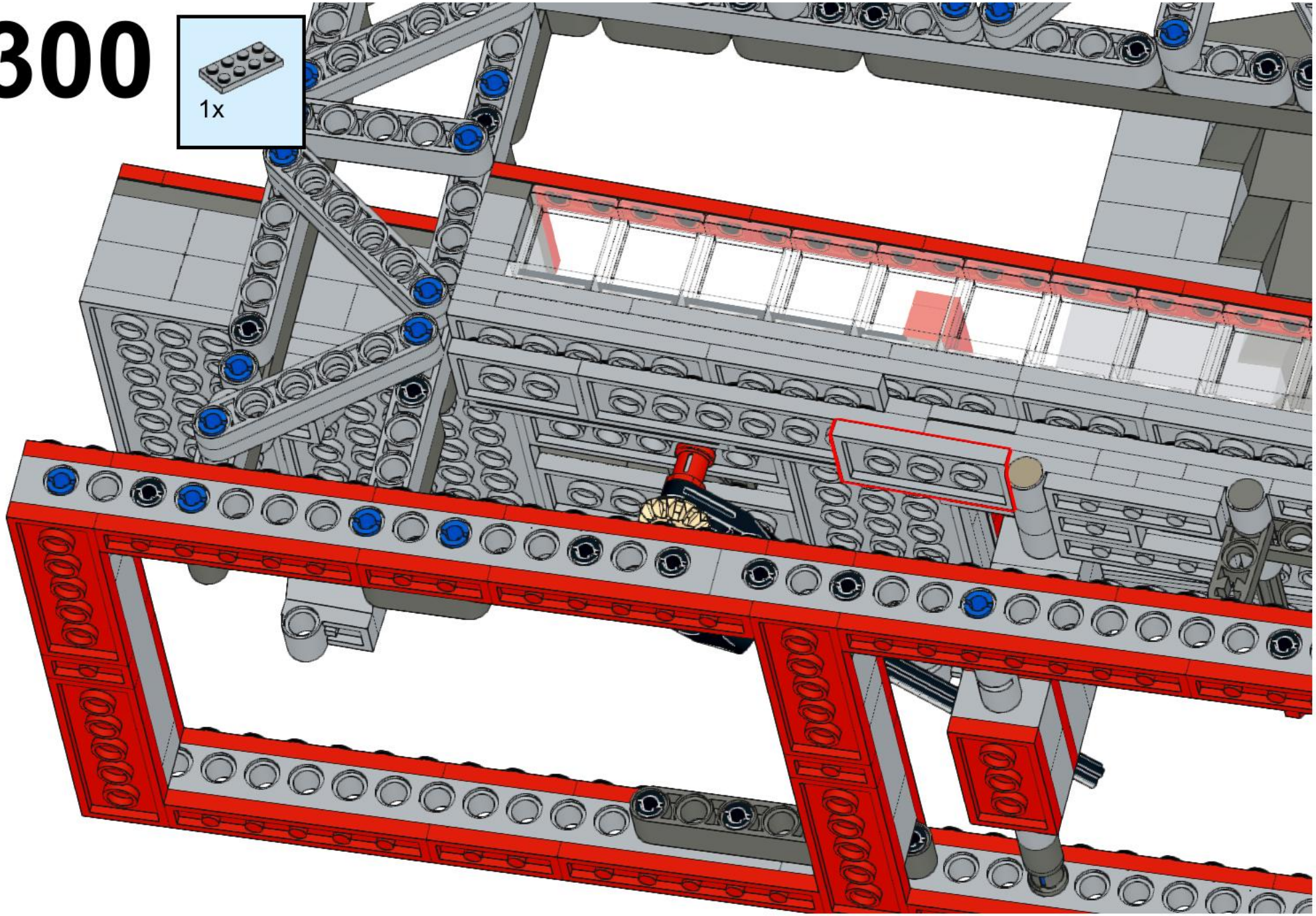

301

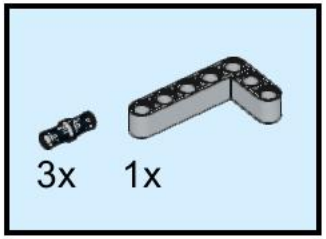

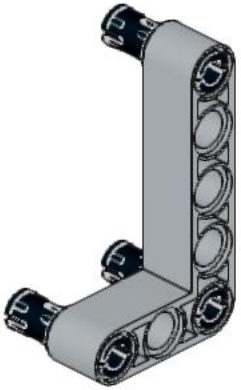

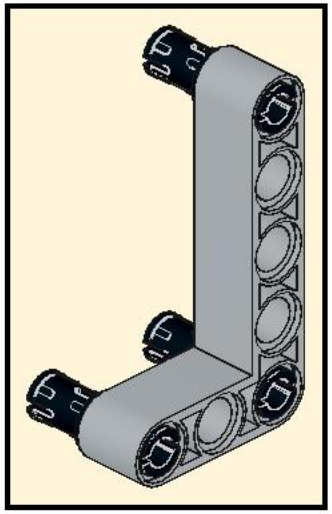

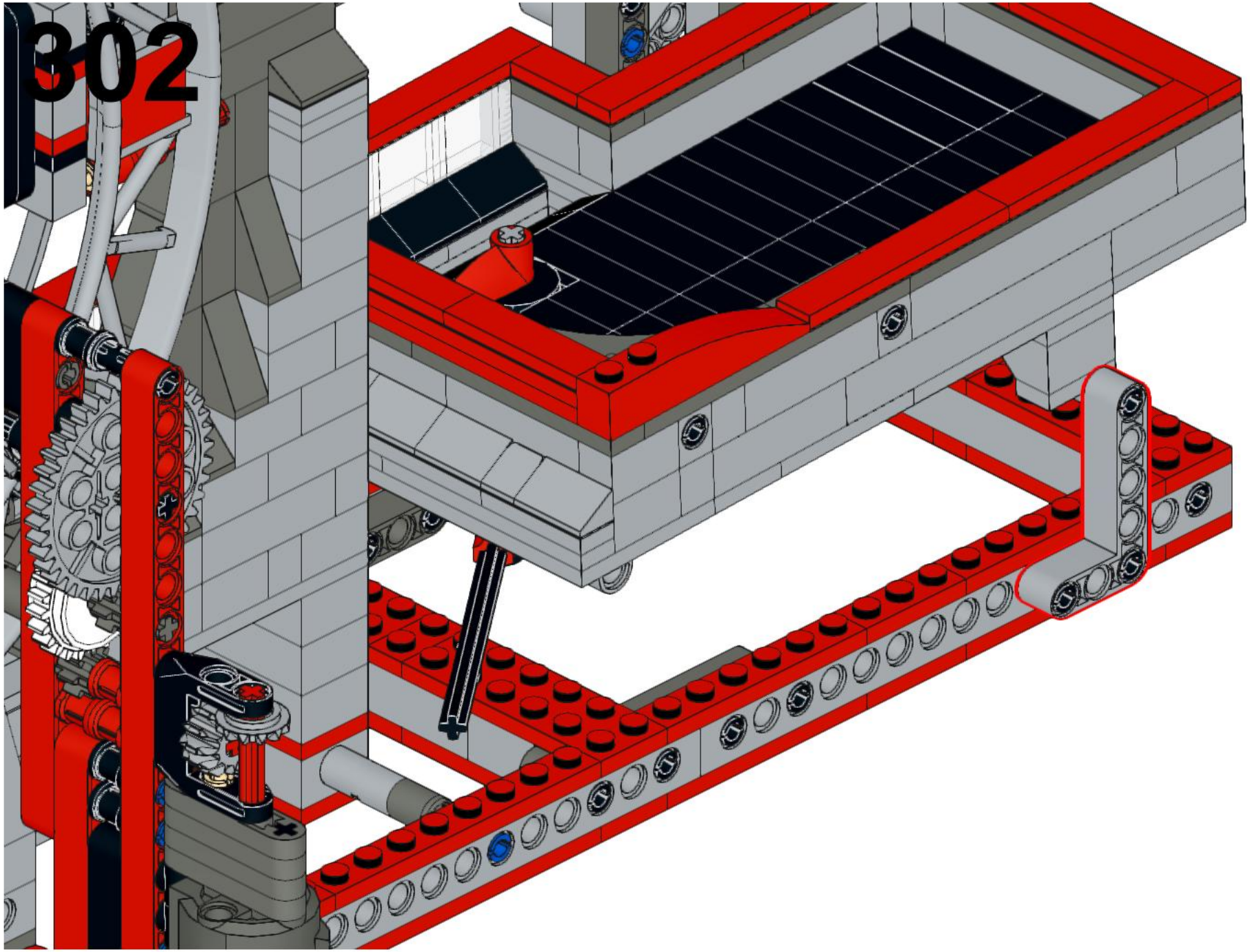
302

303

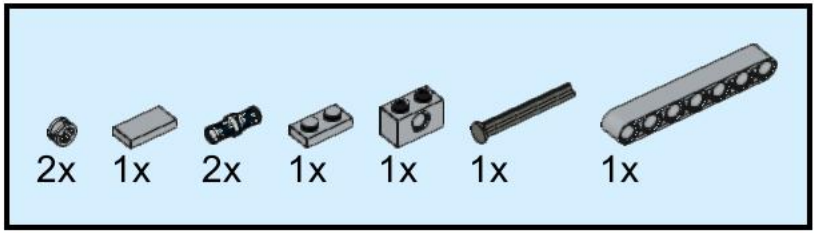

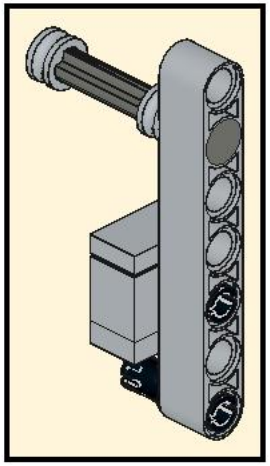

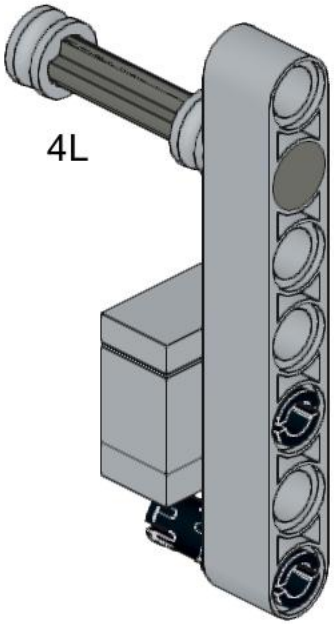

Reference Image.
Do not assemble.

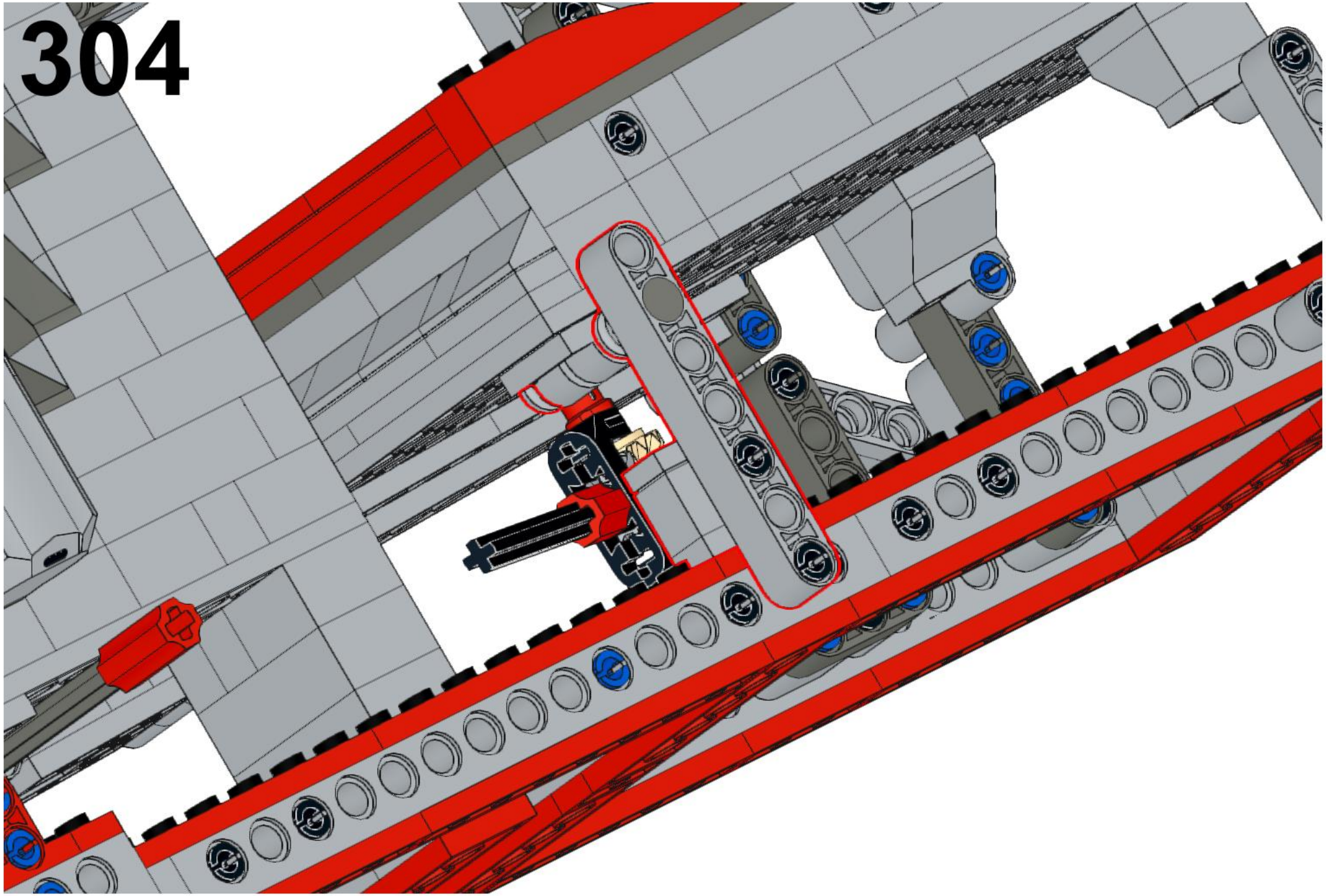

305

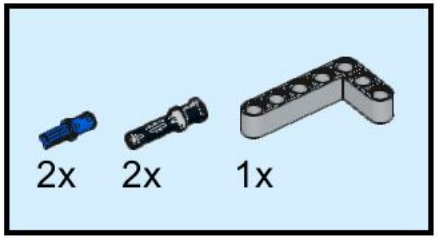

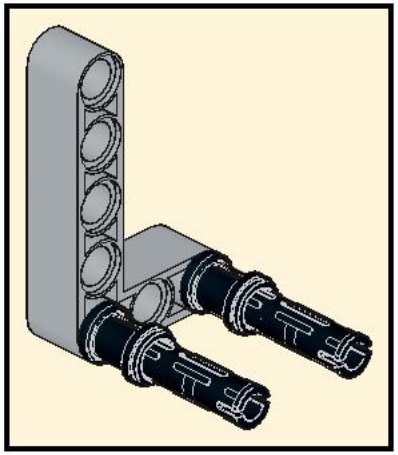

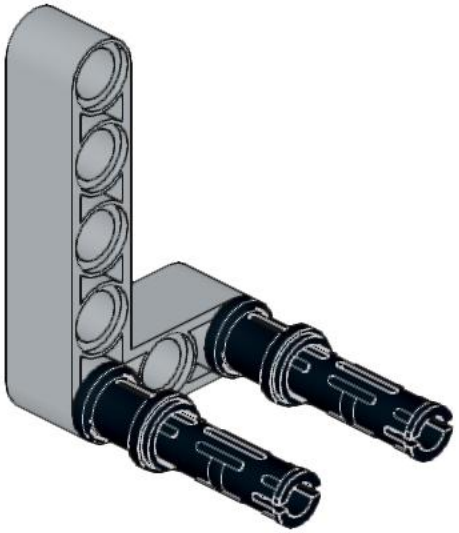

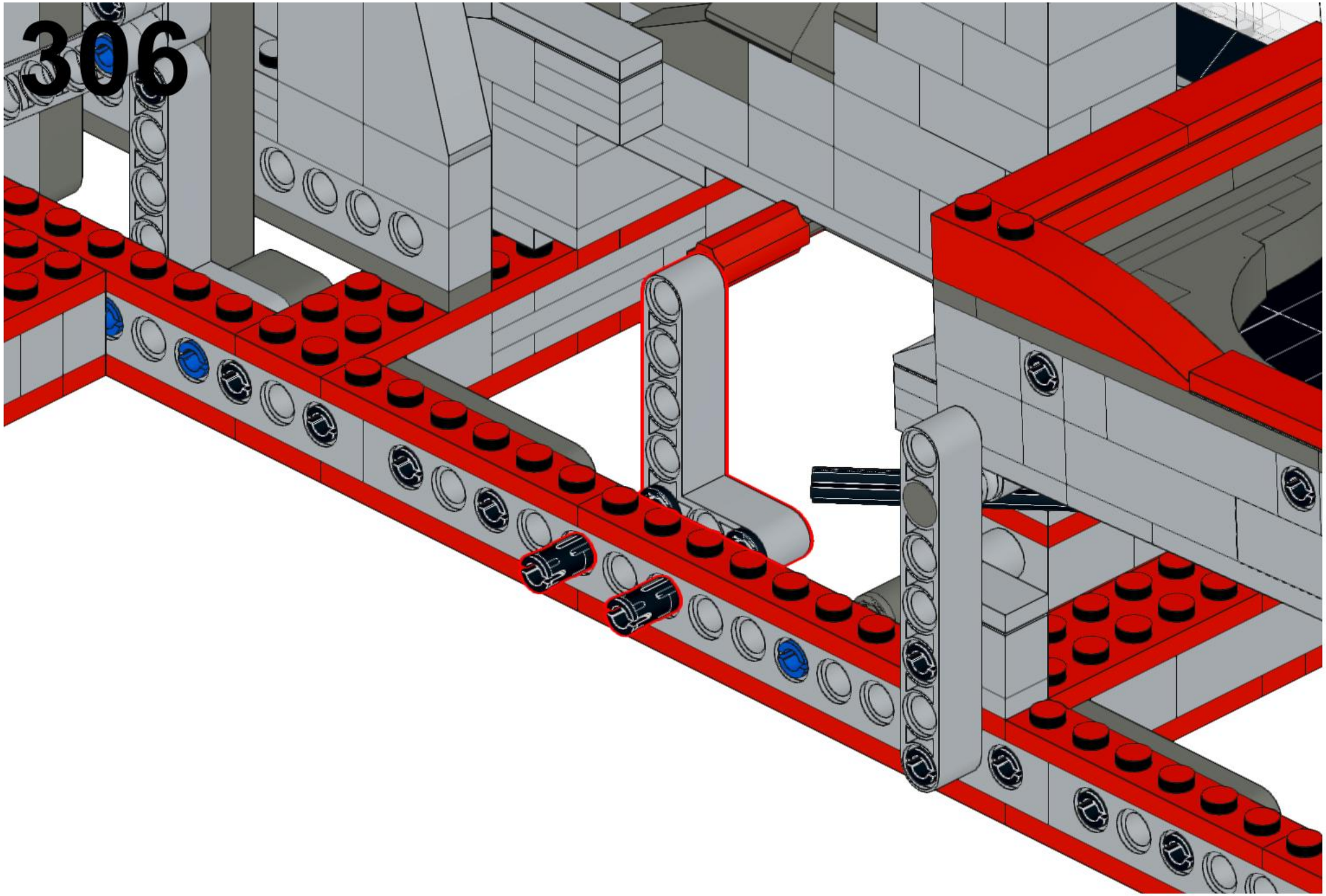
306

307

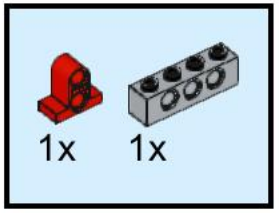

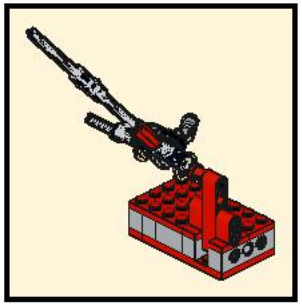

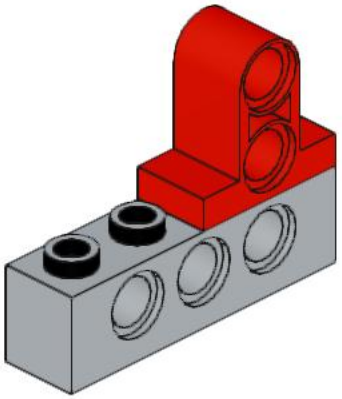

308

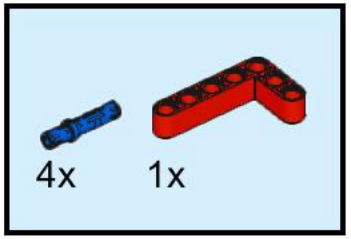

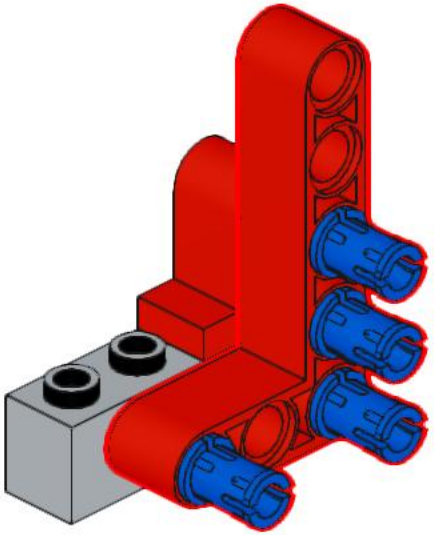

309

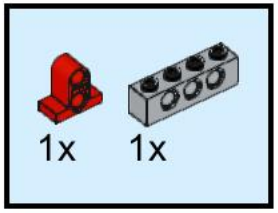

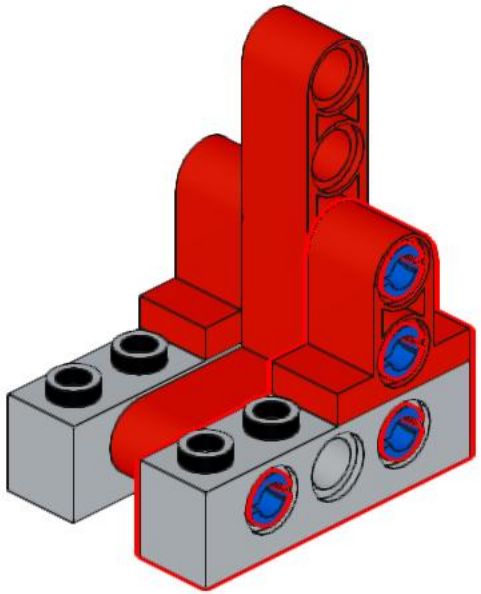

310

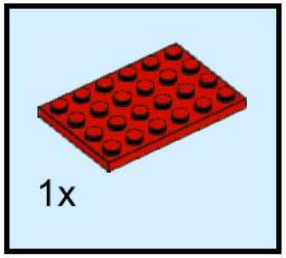

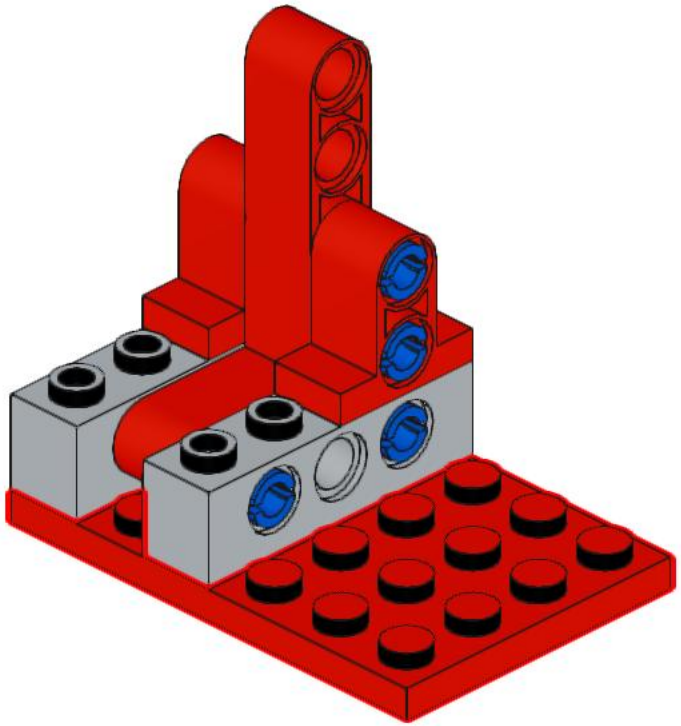

311

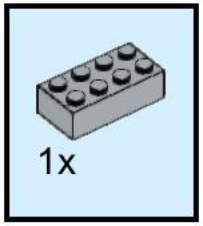

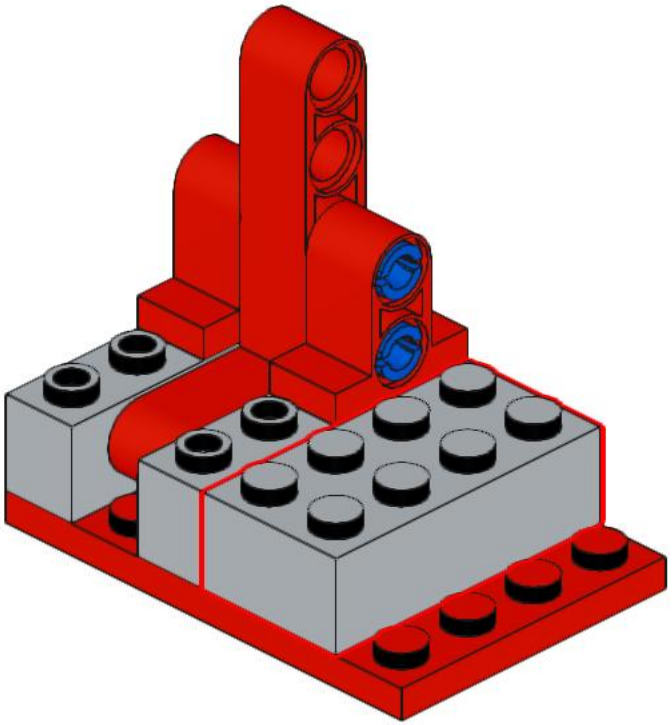

312

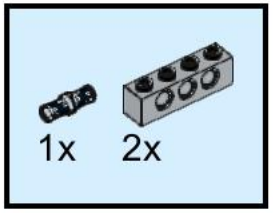

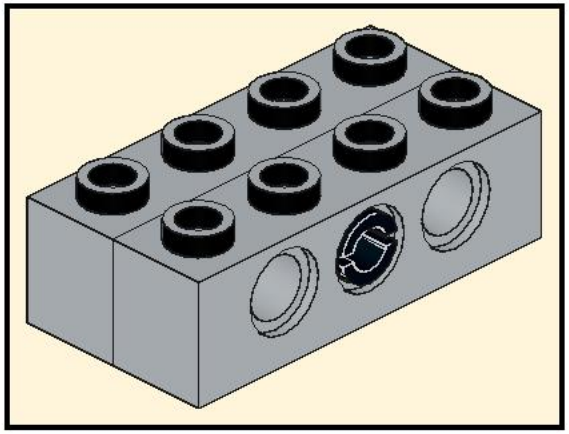

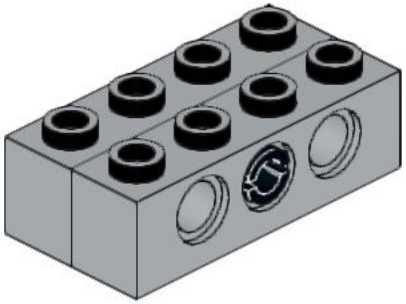

313

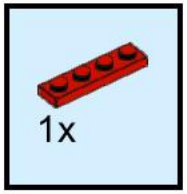

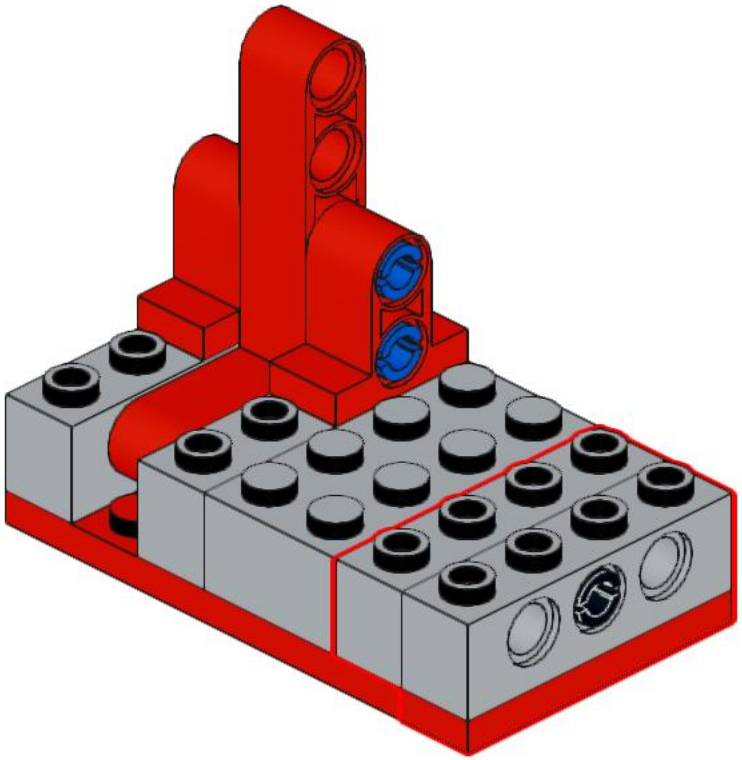

314

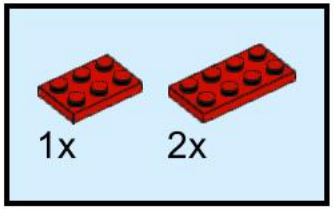

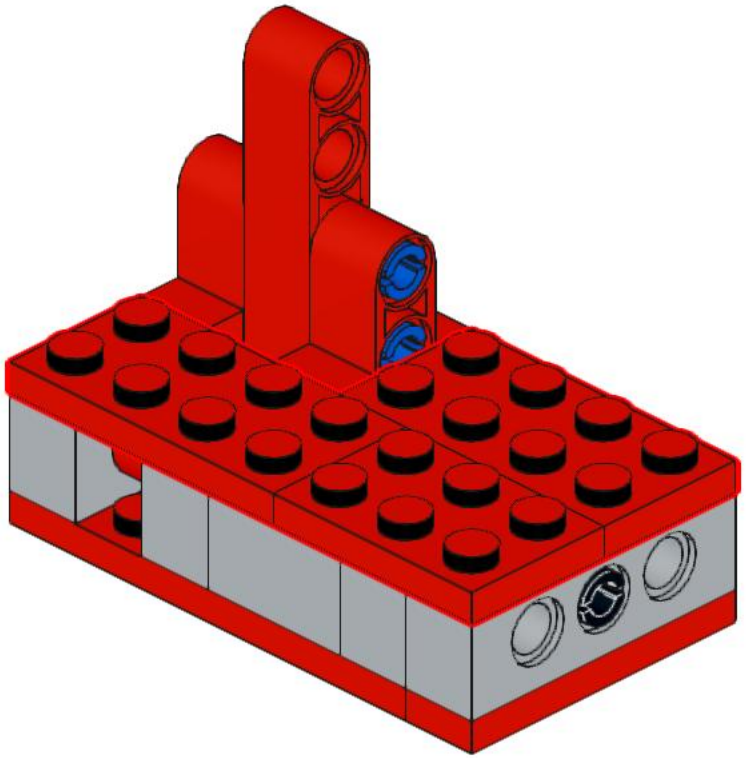

315

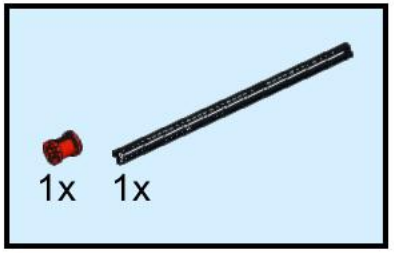

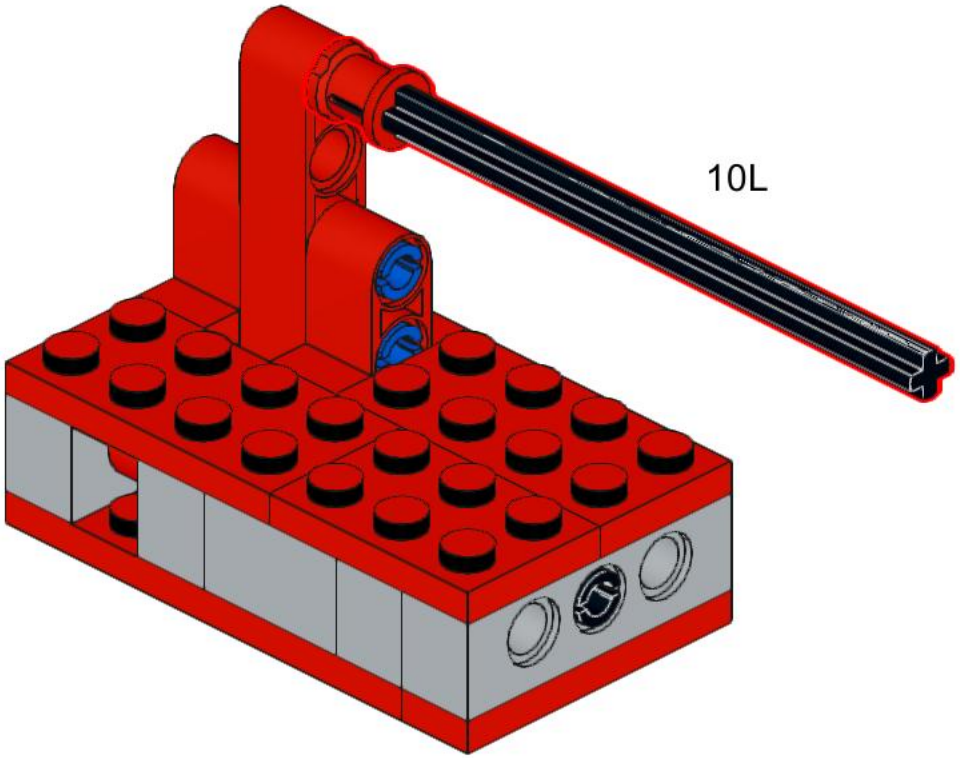

316

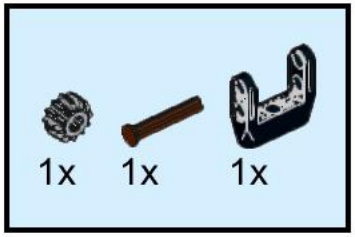

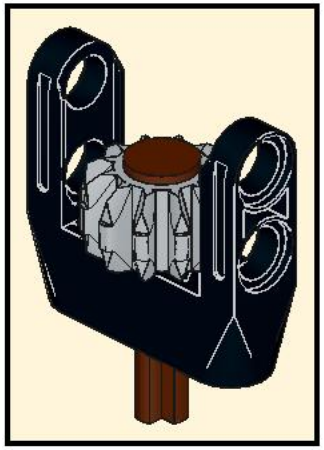

2x

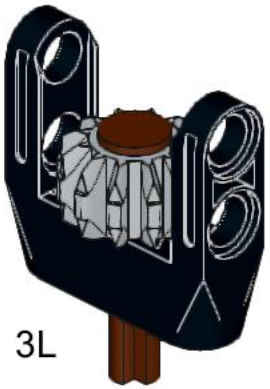

3L

317

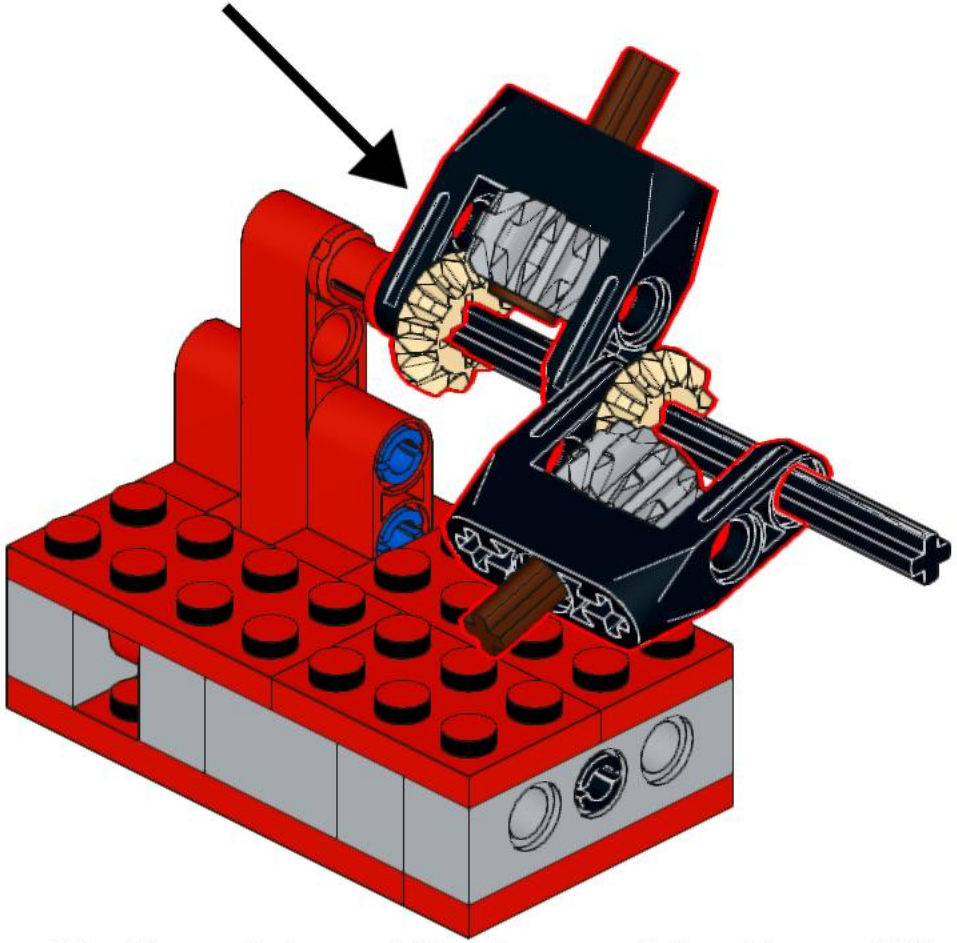

The timing of balls arriving at the base of the Truss Wheel can be adjusted by altering the alignment of these two gears by one or two teeth in either direction.

318

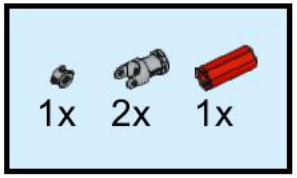

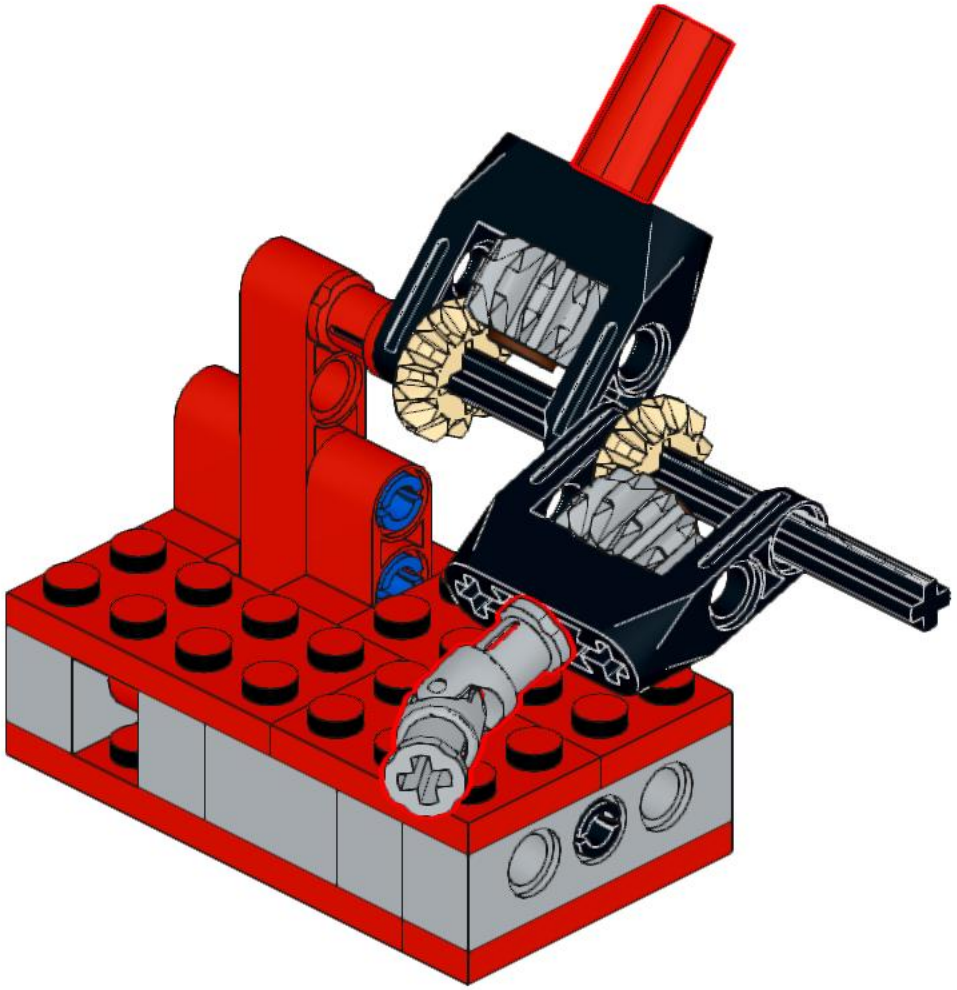

319

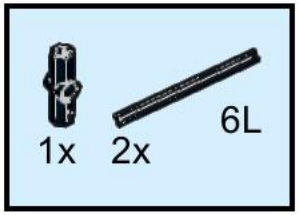

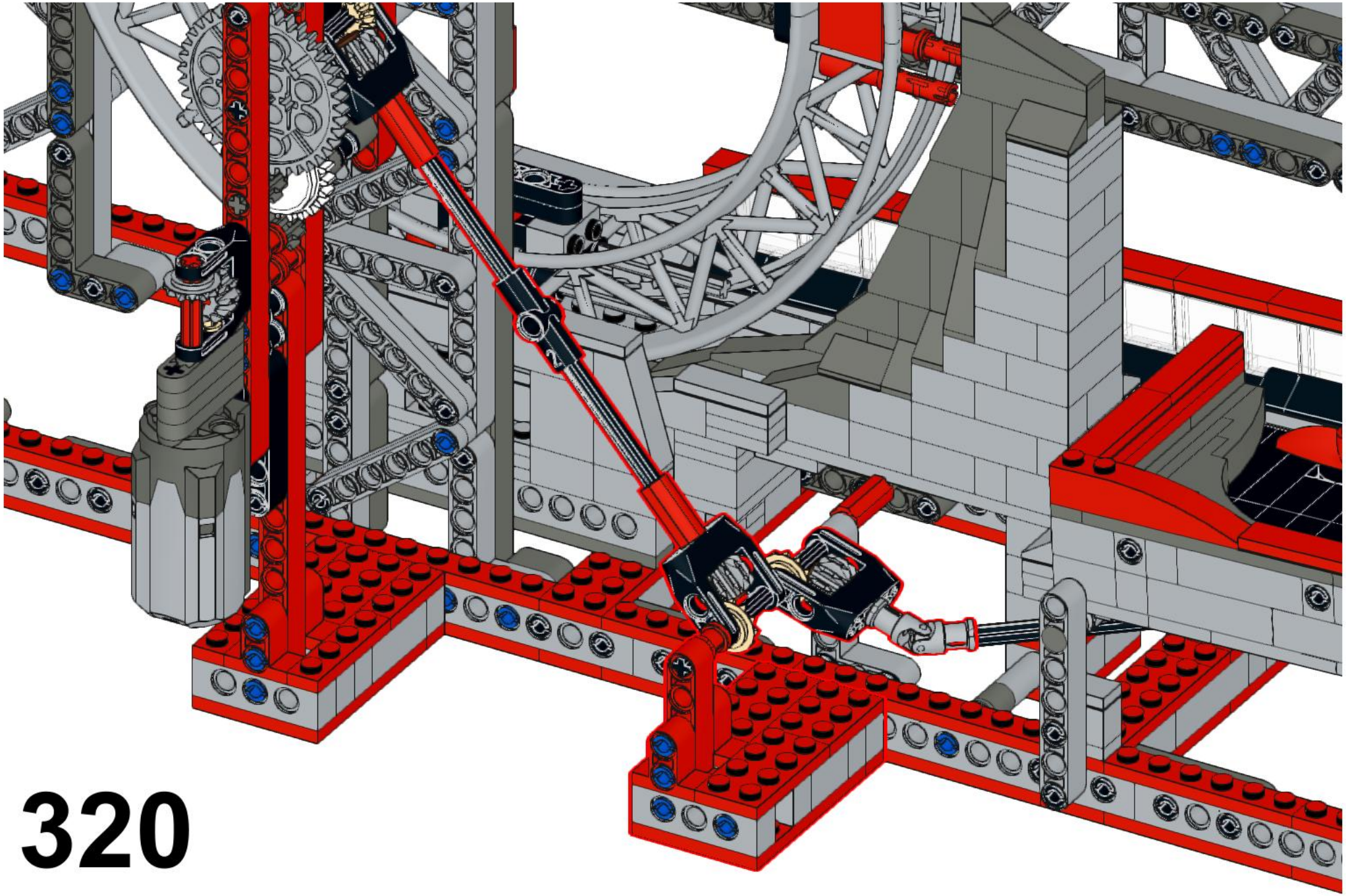

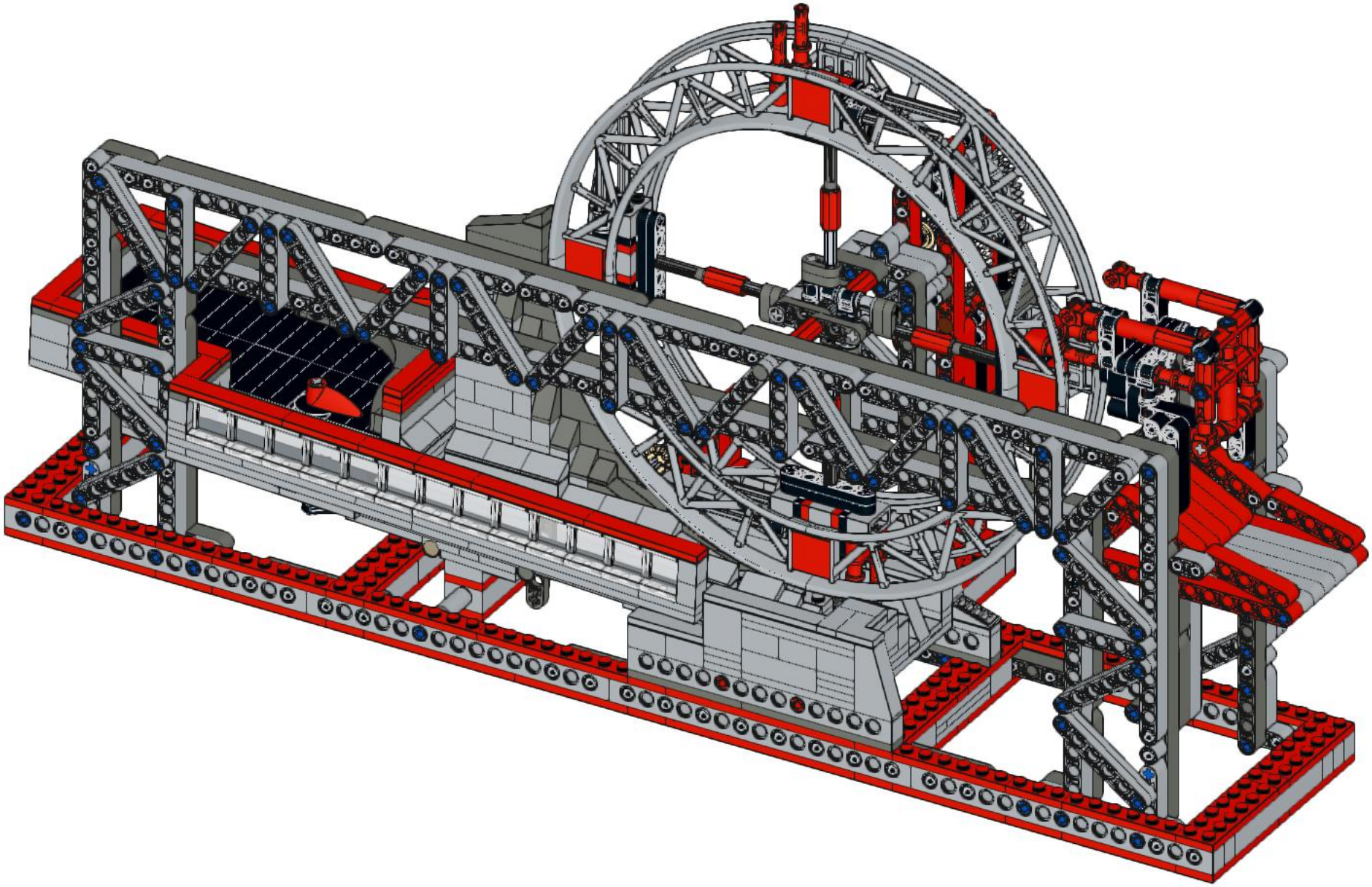

Add Parts List Here