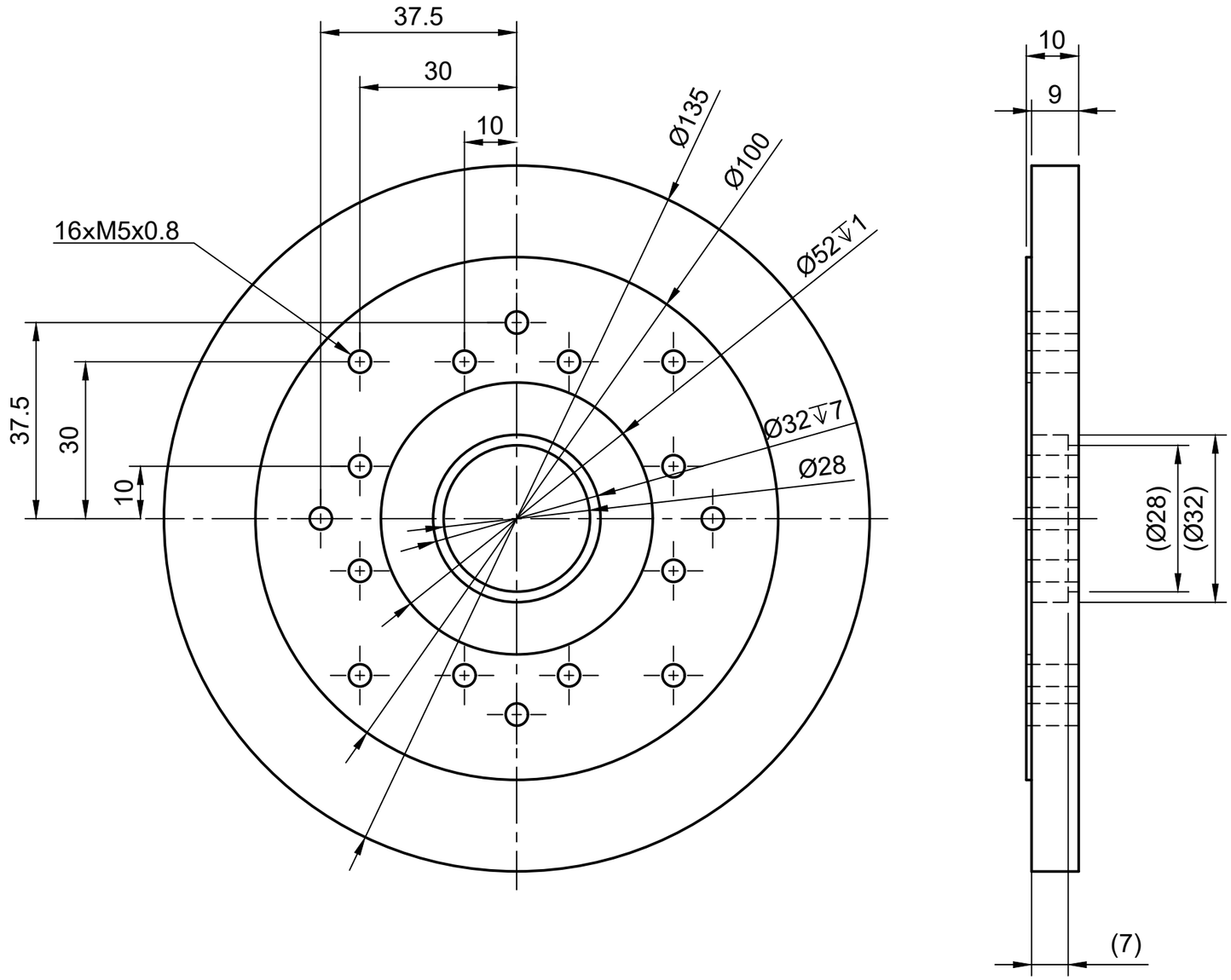

Dept.	Technical reference	Created by HRMK 2024/04/09	Approved by
		Document type	Document status
		Title C-axis_table_holder	DWG No.
			Rev. / Date of issue / Sheet 1/1