Origami Inspired Folding Drone

Eric Dennis
Department of Biomedical Engineering
Case Western Reserve University
Cleveland, OH, USA
erd42@case.edu

Ryan-David Reyes
Department of Biomedical Engineering
Case Western Reserve University
Cleveland, OH, USA
rxr410@case.edu

***Abstract*—Drones are quickly finding many applications in society, ranging from leisure to search and rescue. However, they are difficult to transfer and deploy due to their oftentimes large size. In this paper, we present an origami-inspired drone that can fold into a cube using a variation of the origami flasher design. When in flight mode, the drone is unfolded in a planar configuration. For storage and transport, the drone can be folded into a compact cube. Future work includes actuated folding and unfolding, as well as an investigation into multimodal movement methods.**

***Index Terms*—Drone, Quadcopter, Origami, Origami Flasher, Folding, Compact**

I. Introduction

Quadcopters, otherwise known as drones, are becoming ubiquitous throughout daily life. They have many diverse applications in society, ranging from leisure and sports applications found in First Person Drone Racing, to drone-based reconnaissance and delivery methods, such as those pioneered by Amazon. However, one drawback of drones is their large surface area. This makes them difficult to store and transport. Solutions to this problem are found in drones with hinged arms [1] [2], but there may be novel folding methods from the field of origami that can be applied to this problem.

Origami is the Japanese art of paper folding, and has recently gained traction in science due to its engineering applicability. Origami mathematics, as pioneered by Huzita and Lang, has opened up the door to rigorous engineering of this ancient art. Origami inspired designs can be seen in airbags, mechanical linkages, satellites, and other situations which require objects to fold into compact configurations. Novel applications of origami to flying drones are being developed by Mintchev and Floreano. They have developed a drone with an origami inspired folding cage [3]. The cage, when deployed, is used to house a payload. Once the drone has delivered the payload, it can fold itself, as well as the cage, into a compact configuration for storage. Another origami-inspired design by them uses magnets to hold the quadcopters arms in a folded configuration [4]. When the propellers spin, the torque generated unfolds the arms for use. However, this design is not robust against collisions, as the arms are easily ruptured due to the material.

In this paper, we present a novel origami-inspired folding mechanism based on a rigid body formulation of an origami flasher. Origami flashers were developed by Palmer and Shafer [5]. They consist of a folding pattern that is rotationally symmetric and cylindrical - in our case cuboidal - in the folded state, and planar in the unfolded state.

The flasher origami design allows the drone to fold into a cube, trading the large surface area for volume. When flying, the drone is in the planar configuration, with the props mounted at the edges. Differing from normal origami is the usage of rigid body folding mechanisms that take into account thickness and rigidity of the material. These mechanisms were designed with stiffness in the unfolded configuration as a high priority.

II. Mechanical Design

A. Design Requirements

The main focus was to find a design that could be folded to reduce space when not in use while still maintaining the ability to fly effectively. To this end, any design needed to be made of lightweight, rigid materials. Combining previous origami inspired research with extensive brainstorming, the origami flasher discussed above was used as the basis of the design. This modified flasher design consisted of multiple panels folding over each other from a flat plane down to a cube.

The biggest hurdle was translating a paper design with no stiffness requirements into a supportive structure. With the paper design, all folding occured in two dimensions as the paper has essentially no thickness. The challenge when the designing in three dimensions was to create an effective folding mechanism that would still work over a given thickness. Several methods were discussed before settling on an interlocking system of hinges with metal rods holding them together.

For joints requiring 90 degrees of rotation, a jigsaw puzzle inspired hinge was used, and can be seen in Fig. 2a. For joints requiring 180 degees of rotation, a connector piece was added in between the two plates, where each side of the connector was responsible for 90 degrees of the rotation. An example is shown in Fig. 2b. Given the thickness and the folding shape, one joint on each of the four sides required a special connector. Here, when the copter was open, the two plates touched connected edges. However, when closed, the part geometry required the edges to be separated by .181in. The connector proposed had a hole on one side, and an elongated slot on the

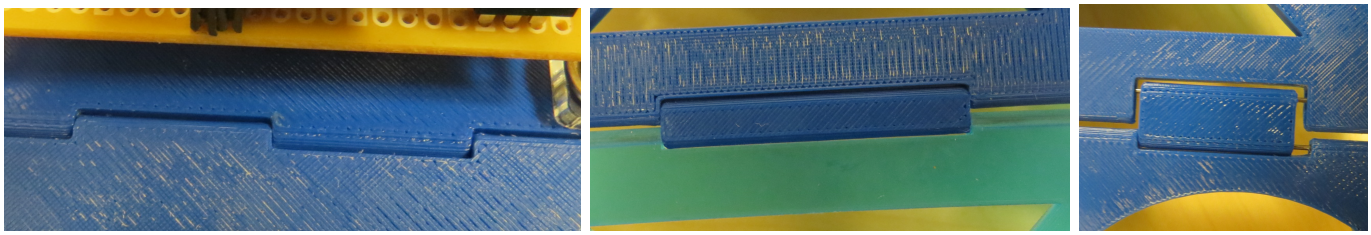

Fig. 1. A. Puzzle-lock hinge. B. 180 degree hinge. C. Pin-slot hinge.

other, allowing the connector to move the appropriate distance. Can be seen in Fig. 2c.

One final connector required was a way to keep the drone rigid in flight. The origami folding worked great to reduce space, but was unable to hold itself open. Here, tabs were proposed that would rotate at each of the four corners of the central square. When out, they would hold the design rigid, but once rotated in they would allow the design to fold without hindrance.

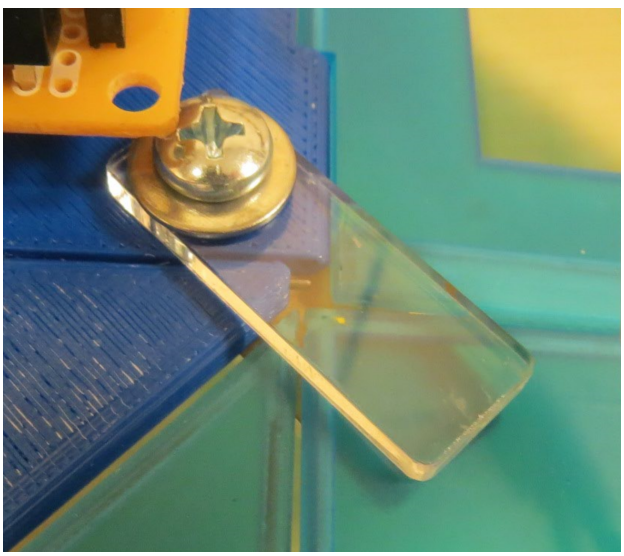

Fig. 2. Locking design to hold the drone open.

Once the basics of shape and function were solved, the issue of weight needed to be tackled. The chosen motors provided a thrust of 242g each, and their weight, coupled with the weight of the electronics needed to run them, totalled 171.8g. A common target to hit with quadcopters is to have the total weight be a max of 50% of the available thrust. Given the weight already accounted for, this left 313g for the copter frame. To achieve this weight goal, strong, lightweight materials were researched, while additional weight saving measures such as removing excess material and reducing part thickness were applied in design revisions.

B. CAD design

In order to save time and money, most design changes were first tested and improved using cad software. Here, changes in part geometry could be viewed and properties such as volume could be accessed immediately, giving up-to-date changes in projected weight and cost of assembly. Additionally, all files created could be easily sent to a file format that could be used for 3D printing.

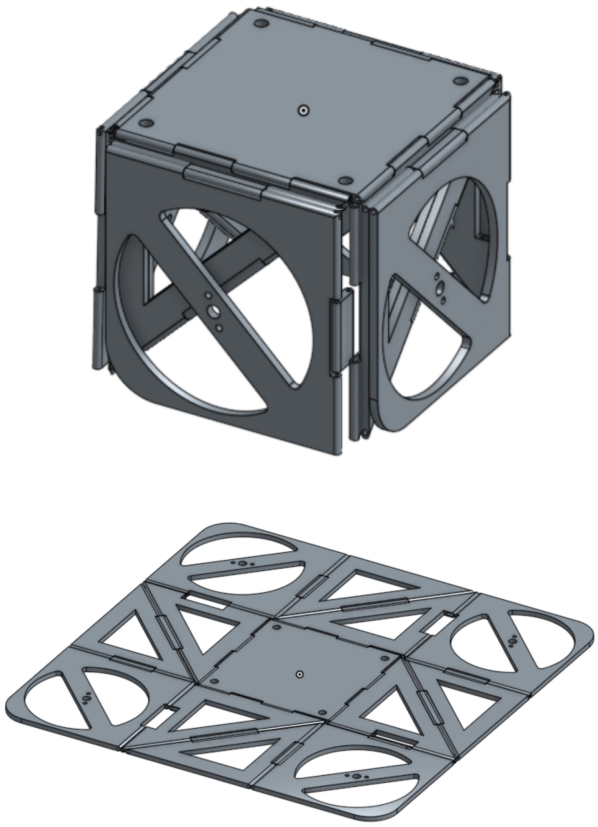

Fig. 3. Drone CAD Design

C. Rigid Body Prototype

During the development phase, a rigid body prototype was created to further the electronics testing while development continued on the foldable design. This design was made in a way that would closely mimic the shape, weight, and flying characteristics of the final design, but could be made very quickly and be durable in case of failure in testing. To this end, a $\frac{1}{8}$in. thick polycarbonate sheet was laser cut, with the shape mimicking that of the unfolded design. Polycarbonate was

chosen as it was more forgiving to drilling than acrylic, and multiple holes were drilled as things like motor configuration and electronics placement were determined.

D. Material Selection

Due to the complexity of the parts, the best method of creating most of the required parts of the assembly was through 3D printing. Several methods exist for 3D printing, and after some consultation, a high-grade, lightweight translucent resin was chosen. Unfortunately, halfway through production of the parts, the manufacturer suffered severe technical difficulties and was unable to print the remaining parts in time. Faced with this setback, ABS plastic was used to print the remaining material as it was the closest to the resin in material properties.

Several parts of the assembly were not 3D printed. The tabs designed to hold the copter rigid when unfolded were made out of laser cut acrylic, done due to the simplicity of part geometry as well as the cost and time of laser cutting vs 3D printing. The design also called for rods to be threaded through the holes at the connected edges of the 3D plates. For this, Machined steel rods were ordered due to the strength and tight tolerances provided.

The printing worked exceptionally well. The material tolerance was excellent for exterior dimensions, and all of the parts fit together with very little gap or pressure. The one area that could be improved on were the holes used for joining the parts together. The hole size was set at 1/16in, or .0625in and metal rods were ordered to provide a press fit at that size. Once the materials were printed and the rods were attempted to be installed, it became obvious that the holes were significantly smaller than dimensioned in the drawing. Various rod sizes were tested and the final size that worked to go through all holes was .035in, or almost half the planned size. This highlighted one of the shortcomings of 3D printing, and is something that will need to be taken into account in any future work done with this quadcopter design.

E. Assembly Process

After all 25 individual 3D parts had been printed out, significant assembly was required. This process involved cutting .035in. piano wire into appropriate length segments, and then threading them through the holes in the plastic. This was a very time consuming process, as each individual printed part had 2-3 joints where the holes with connected parts needed to be coaxial for the wire to pass through. The assembly process worked great however, as once put together, each joint had very little play, but good freedom of movement for a full 180 degrees.

III. Electrical and Software Design

A. Electrical Design

For this application, a Teensy 3.6 microcontroller unit (MCU) was selected to be the main computational unit. Its high clock rate, as well as inclusion of a floating point unit make it an ideal microcontroller for calculating control algorithms with fast loop closure times. The MCU communicates over I2C with an inertial measurement unit (IMU), the GY-85. The GY-85 consists of the ADXL345 accelerometer, ITG3200 gyroscope, and HMC5883L magnetometer. This module provides estimates of overall tilt and angular velocity, as well as acceleration of the drone. The MCU communicates with an ESP8266 using a Universal Asynchronous Receiver Transmitter (UART). The ESP8266 is a Wi-Fi chip that is capable of connecting with external networks, as well as serve as an access point. In this application, the ESP8266 acts as a designated access point, and connects with a laptop with a custom GUI and a PlayStation 3 controller as the main user interface.

TABLE I
Drone Components

Microcontroller	Teensy 3.6
Motors	RS1306 4000kV
IMU	GY-85
ESCs	Sunrise Cicada 10A 4-in-1
Wi-Fi	ESP8266
Battery	Turnigy 850 mAh 45-90C
Props	3045 Props

The 3 inch props are driven by RS1306 4000kV Brushless DC Motors. These motors are capable of achieving 27000RPM at 12V, and produce 242g of thrust each, with 3045 props. The motors are powered by electronic speed controllers (ESCs), which is the Cicada Sunrise 10A 4-in-1 ESC. The MCU communicates with the ESC via pulse position modulation at a rate of 12kHz. A Turnigy 850mAh 3S 45-90C Lithium Polymer battery powers the whole system, giving an estimated flight time of about 5 minutes. A full electronic parts list can be found in Table I, and a system diagram can be found in Fig. 4.

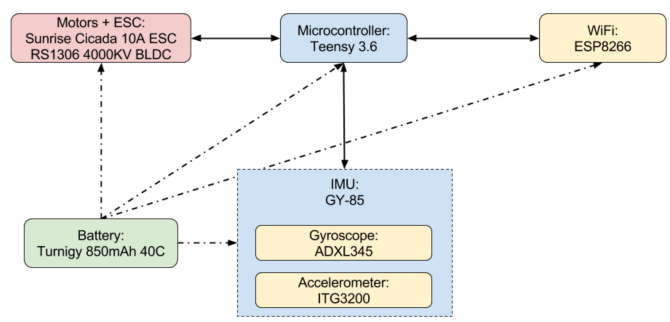

Fig. 4. Drone System Diagram

B. Control Algorithm Design

Drone pitch and roll is estimated using data from the accelerometer in a process called complementary filtering. First an angular estimate of the pitch and roll is determined using the accelerometer only as seen in (1). Then, the complementary filter fuses this data with an integration of the angular

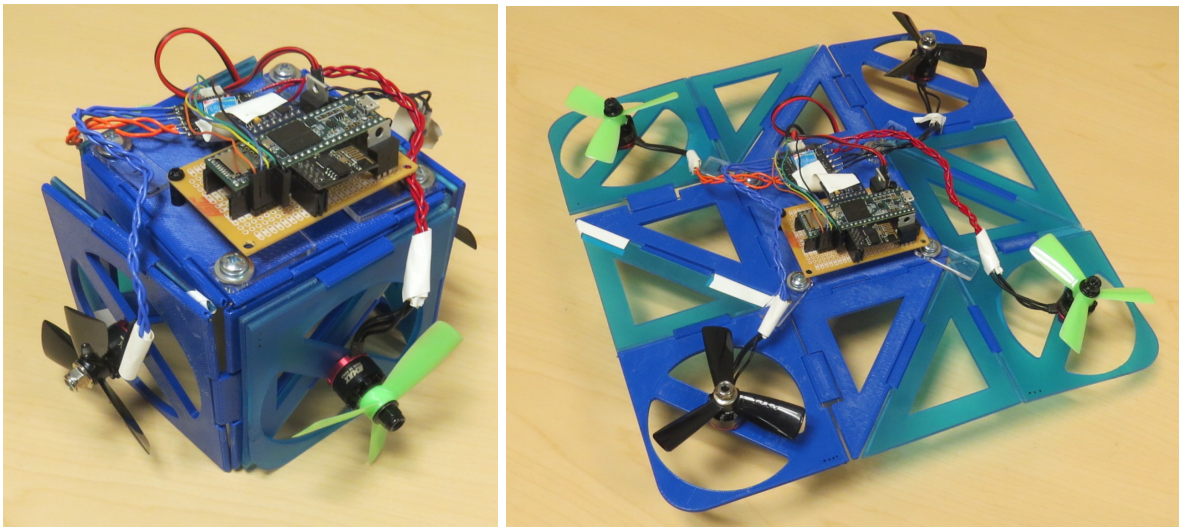

Fig. 6. Left: Folded Drone. Right: Unfolded Drone

velocity of the gyroscope. The full complementary filter can be seen in (2).

$$\begin{aligned} \theta_{ra} &= \text{atan2}(\alpha_y, \alpha_z) \cdot \frac{180}{\pi} \\ \theta_{pa} &= \text{atan2}(-\alpha_x, \sqrt{\alpha_y^2 + \alpha_z^2}) \cdot \frac{180}{\pi} \end{aligned} \tag{1}$$

$$\begin{aligned} \theta_{rc} &= 0.98(\theta_{rc} + \dot{\theta}_r \cdot \Delta t) + 0.02 \cdot \theta_{ra} \\ \theta_{pc} &= 0.98(\theta_{pc} + \dot{\theta}_p \cdot \Delta t) + 0.02 \cdot \theta_{pa} \end{aligned} \tag{2}$$

Where θ_{ra}, θ_{pa} are the estimates of roll and pitch respectively from the accelerometer. α_x, α_y, and α_z are the accelerations along each respective axis. θ_{rc} and θ_{pc} are the estimates of roll and pitch from the complementary filter. $\dot{\theta}_r$ and $\dot{\theta}_p$ are the roll and pitch angular velocities as measured by the gyroscope. The advantage of complementary filter over direct integration of the gyroscope values is that it will not drift due to fusing the angular signal from the accelerometer.

To stabilize the drone, a cascaded PID control system was developed. The inner loop, known as the rate loop, uses angular velocity as the feedback variable. The outer loop, known as the position loop, uses the complementary filtered pitch and roll of the drone as the feedback variable. This cascaded control paradigm is robust against disturbances, and produces a more stable system compared on a single loop with a positional feedback variable. The structure of the control loop can be seen in Fig. 5.

IV. Completed Drone

After all design, electronics testing, and assembly was done, all components were added to the drone and it was made ready to fly. Some minor changes from rigid prototype to final design needed to occur, such as changing the lengths of the motor wires to accommodate the folding, and adjusting the location of the electronics to allow the support tabs room to rotate on the central base part. The finished product can be seen folded and unfolded in Fig. 6.

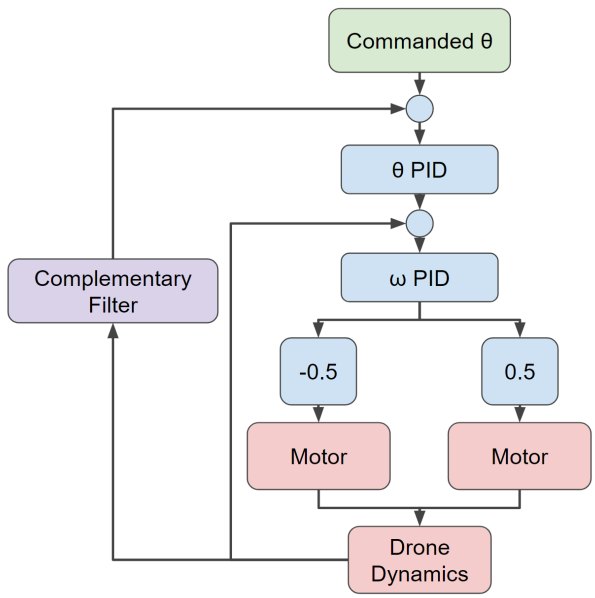

Fig. 5. Cascaded Control Architecture

V. Future Work

To improve the stability of the drone, several improvements can be made. The first is to use Gain Scheduling as a function of battery voltage. As the battery depletes, the thrust of the motors decreases. This changes the plant dynamics seen by the control algorithm, and may lead to unstable performance. Changing the tuned parameters of the control system as a function of battery voltage or run-time is one way to counteract the instability due to battery depletion.

Another method to improve stability is to use a Kalman Filter to provide less noisy estimates of the pitch and roll angle. The Complementary Filter is very fast computationally, but produces noisier signals compared to a Kalman Filter

implementation. However, care must be taken that the Kalman Filter can update fast enough to meet the control loop deadline.

Finally, ensuring adequate mounting and balancing of mass on the drone would help decrease instability due to vibrations and an unbalanced center of mass, as well as shaving and balancing the rotors.

In regards to mechanical design, a top target for improvement is the folding and unfolding mechanism. The current iteration is unwieldy, as it must be unlocked, folded, and then locked into place by hand. A motorized folding system would significantly increase the speed of folding, and provide a function not previously seen in any drones.

Furthermore, the addition of unidirectional hinges to the joints of the drone would serve to increase the speed of folding. Each hinge has 180 degrees of freedom, while only 90 degrees is required. An adjustment in the joint design could be implemented that would prevent excess movement once the 90 degrees limit is reached. This would eliminate the chance of a joint folding the wrong direction when being closed, which is the cause of most of the time delays when folding.

A final improvement is the addition of landing gear for the drone. It will need to be designed in such a way that the actuated folding and unfolding can occur unimpeded, while still safely supporting the quadcopter while unfolded. Since the current design has the propellers facing outwards horizontally while in folded form, It may be possible to use this to perform translational motion, if there were omnidirectional or caster wheels at the base. This multimodal transport could open up even more usage options for this drone.

References

[1] DJI, Spreading Wings S800-Professional Flying Platform, (2017) https://www.dji.com/spreading-wings-s800

[2] Folding Drone, by S. Lupashin, D. Sekanina R. Milan (2016, Dec 27). Patent USD774941S1. Available: www.google.com/patents/USD774941

[3] P. M. Kornatowski, S. Mintchev, and D. Floreano, An origami-inspired cargo drone, presented at IEEE/RSJ International Conference on Intelligent Robots and Systems(IROS), Vancouver, Canada, Sept. 2017

[4] S. Mintchev and D. Floreano, A pocket sized foldable quadcopter for situational awareness and reconnaissance, presented at 2016 IEEE International Symposium on Safety, Security, and Rescue Robotics (SSRR), Lausanne, Switzerland, Oct. 2016

[5] R. J. Lang, S. Magleby, and L. Howell, Single Degree-of-Freedom Rigidly Foldable Cut Origami Flashers, Journal of Mechanisms and Robotics, vol. 8 June 2016