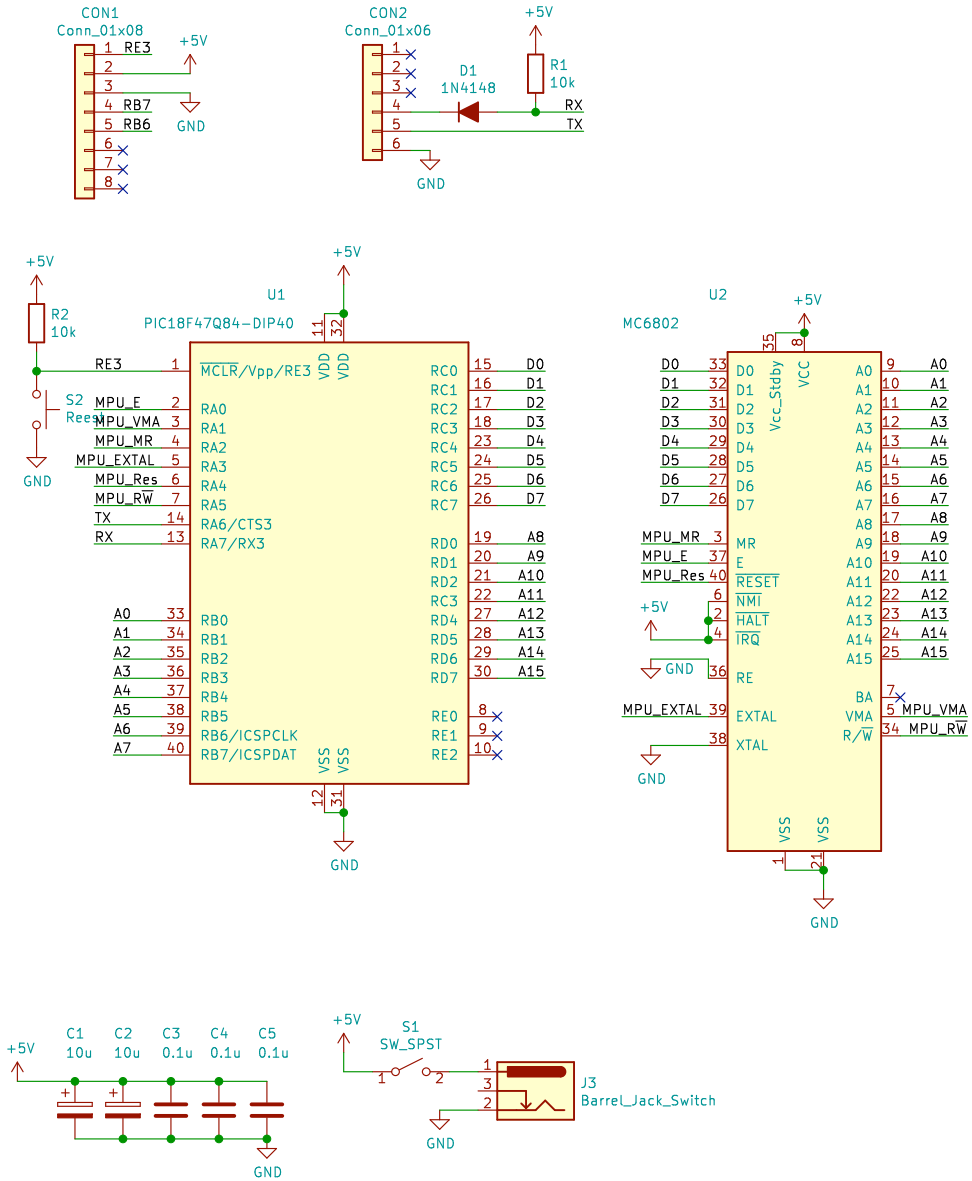

Sheet: /
File: emu6802.sch

Title: EMU6802, derived from EMUZ80

Size: A4	Date:	Rev:
KiCad E.D.A. kicad (5.1.10-1-10_14)		Id: 1/1