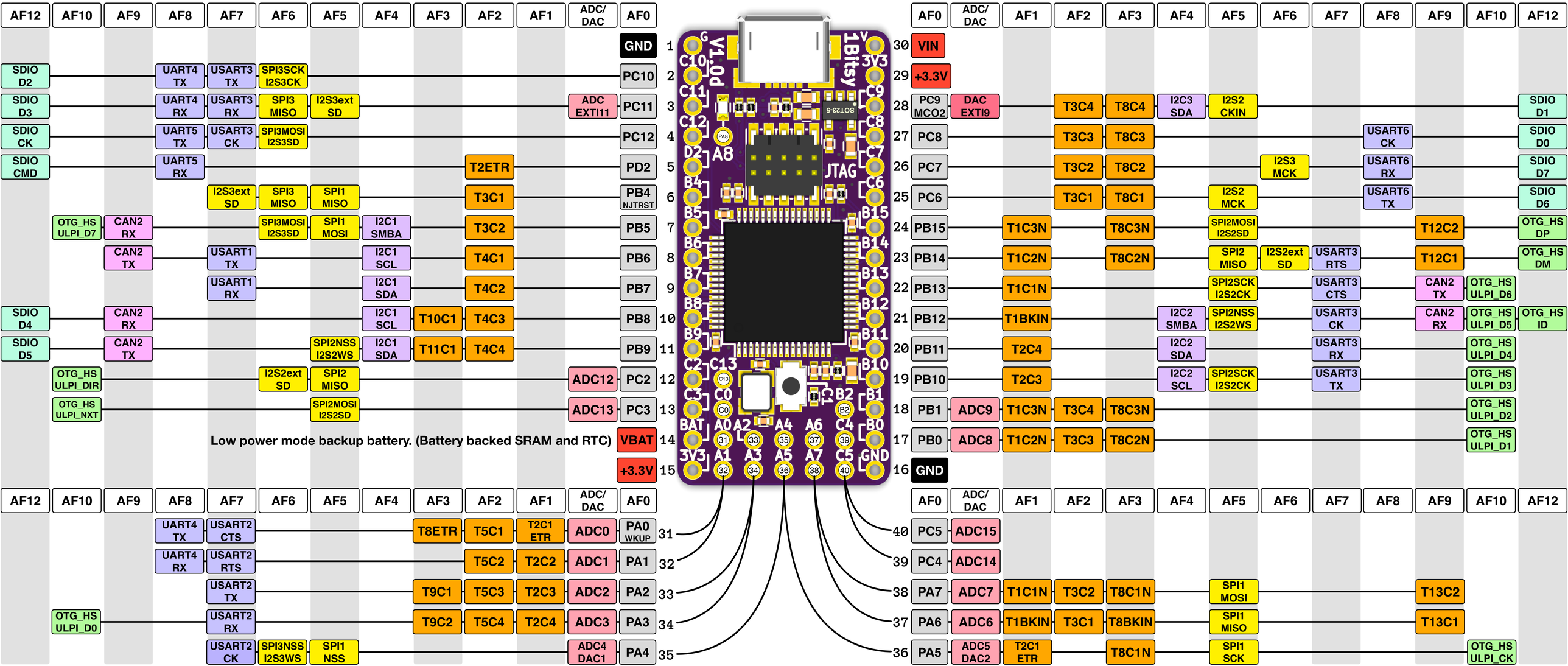

Copyright 2016 Piotr Esden-Tempski
License: CC-BY-SA V4.0
Copyright 2016 1BitSquared LLC

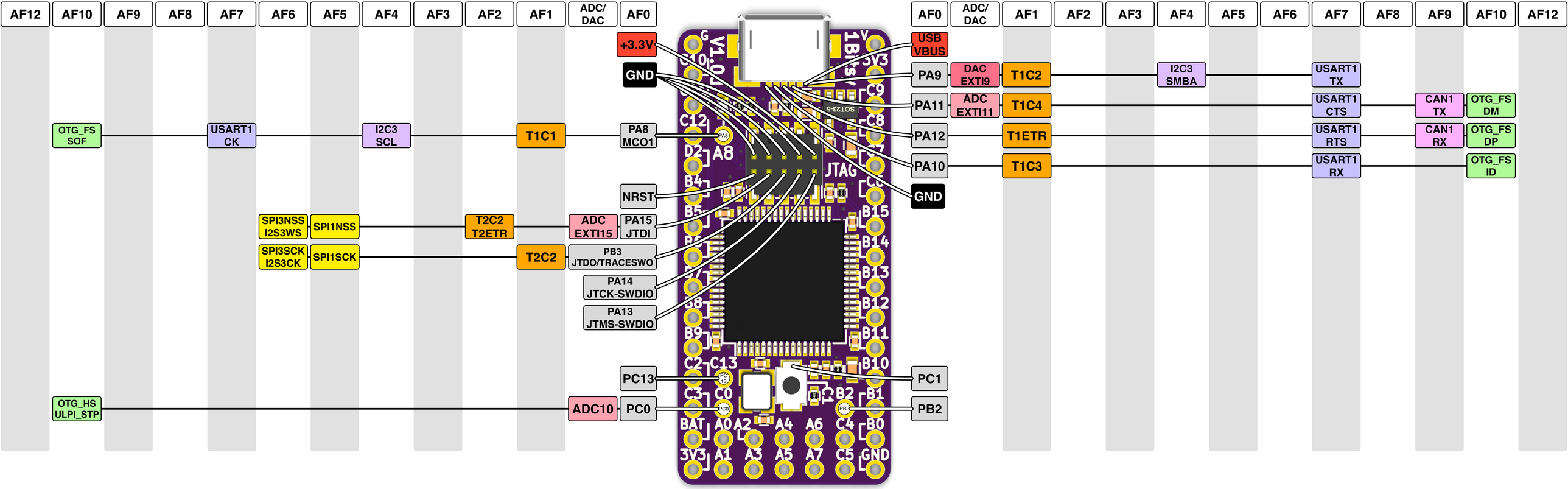

Copyright 2016 Piotr Esden-Tempski
License: CC-BY-SA V4.0
Copyright 2016 1BitSquared LLC

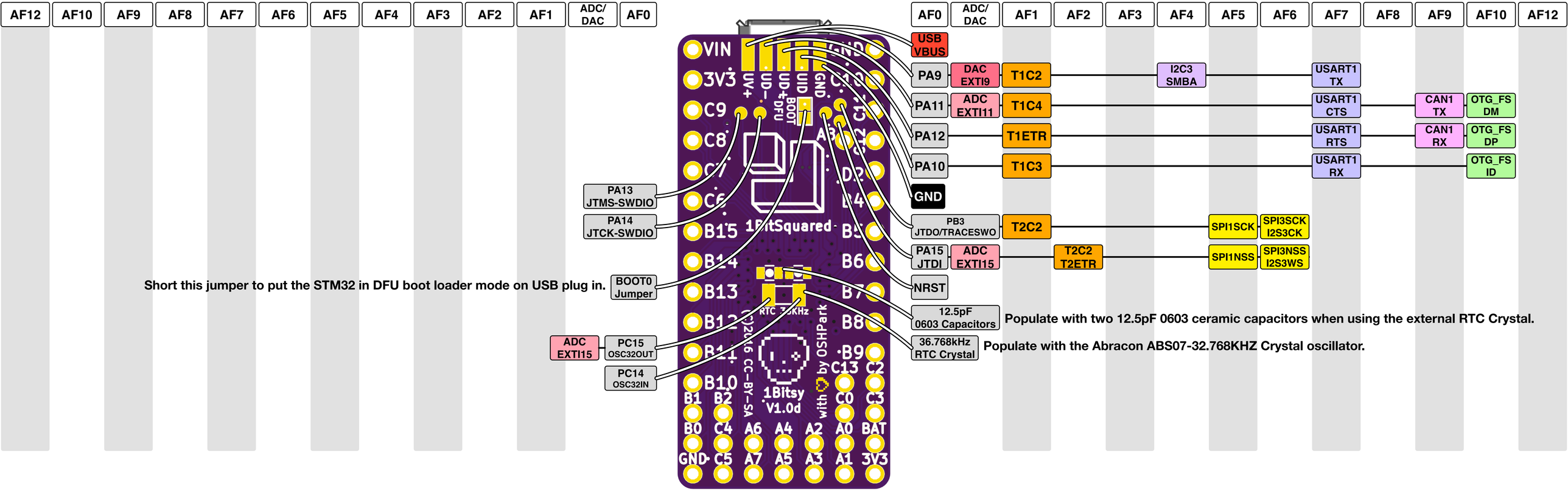

Copyright 2016 Piotr Esden-Tempski
License: CC-BY-SA V4.0

Copyright 2016 1BitSquared LLC